Overview

The HP ProLiant SL335s G7 Server is the first AMD half-width server node for the HP ProLiant SL6500 Scalable System. The SL335s G7 is an independently serviceable 2P server node using AMD Opteron 4100 series processors with 12 DDR3 DIMM sockets. The SL6500 is the latest family of HP server solutions optimized for scale-out customers to greatly reduce costs, maximize power efficiency, and maintain total flexibility. The SL6500 supports up to eight independent half-width HP ProLiant SL335s G7 Servers in the 4U HP ProLiant s6500 Chassis. The servers share hot-plug power supplies and hot-plug fans, providing greater power and cooling efficiencies while also providing a serviceable, available configuration.

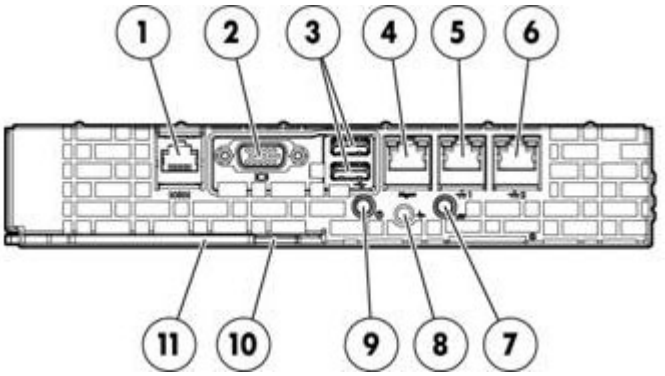

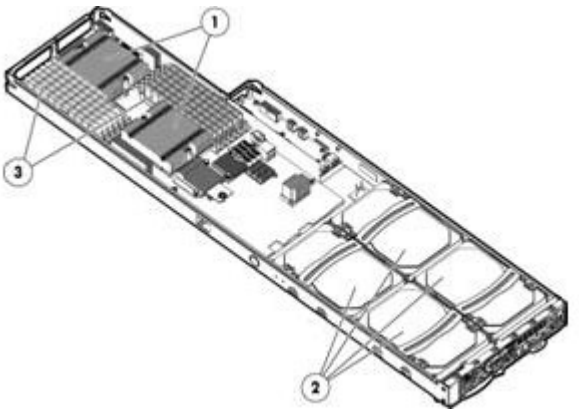

Front View:

1. Serial port
2. Video port
3. Two USB ports
4. iLO 3 NIC connector
5. One GbE LAN port with shared management (RJ-45)
6. One GbE LAN port (RJ-45)
7. UID Button
8. Health LED
9. Power Button
10. Release button
11. Ejection lever

Top View:

1. Up to Two AMD Opteron™ Processor 4100 series
2. Four 3.5" non-hot plug hard drives using a quick release drive carrier
3. 12 DDR3 DIMM slots

What's New

- Support for new HP hard drives

Standard Features

NOTE: For the Standard Features shipped in the Factory Integrated Models, please see the "Configuration Information - Factory Integrated Models" section.

Processor
One of the following depending on Model

Six-Core Processors
AMD Opteron™ 4184 (2.80GHz/6-core/6MB/75W) Processor
AMD Opteron™ 4176HE (2.40GHz/6-core/6MB/50W) Processor
AMD Opteron™ 4162EE (1.70GHz/6-core/6MB/32W) Processor
Quad-Core Processor
AMD Opteron™ 4130 (2.60GHz/4-core/6MB/75W) Processor
NOTE: Up to 2 processors supported. Mixing different processor models is not supported.

Cache Memory
One of the following depending on Model

6MB Shared Level 3 cache

Chipset

AMD® SP5100 Chipset

Upgradeability

Upgradeable to two processors

Memory Protection

Advanced ECC

Memory

Type	DDR3 Registered (RDIMM) or Unbuffered (UDIMM)
Maximum (RDIMM) (per server tray)	192GB (12 x 16GB) for Registered Memory configurations
Maximum (UDIMM) (per server tray)	32GB (8 x 4GB) for Unbuffered Memory configurations

NOTE: Depending on the memory configuration and processor model, the memory speed may run at 1333MHz, 1066MHz, or 800MHz. Please see the Online Memory Configuration Tool at: www.hp.com/go/ddr3memory-configurator.
NOTE: Kits described as LP include Low Power DIMMs. For more information on ProLiant Energy Efficient Features, see: www.hp.com/go/proliant-energy-efficient.

Network Controller

HP NC362i Integrated Dual Port Gigabit Server Adapter

Expansion Slot

PCI slot is available as an internal PCI slot only for Smart Array Controllers

Expansion Slot #	Technology	Bus Width*	Connector Width	Form Factor	Notes
1	PCI-Express 2.0	x16	x16	Low Profile	3.3 volts

* Indicates the number of physical electrical lanes running to the connector.

Standard Features

Storage Controller	HP Embedded Smart Array B110i SATA RAID Controller (RAID 0, 1, 10) per server node NOTE: To enable RAID on Embedded SATA, use the HP Smart Array B110i SATA Raid controller, To enable use of the B110i, enter the ROM based setup utility(RBSU). The option for enabling RAID can be found in the advanced section of the RBSU. For additional details www.hp.com/go/SATARAID NOTE: Transfer rate: 3.0 Gb/s SATA. NOTE: A HP Smart Array controller is required for SAS Hard Drives NOTE: A HP Smart Array controller is required for any HP hard drive exceeding 2.2 TB. NOTE: An external diskette drive, USB floppy drive key or virtual FDD using LO100 Advanced Pack is needed to install storage controller drivers during a Windows operating system installation from a CD.

Internal Storage Devices	Diskette Drives	Via USB only
	Optical Drives	DVD / CD drives via USB only External support only.
	Hard Drives	None ship standard Support for up to four 3.5" or eight 2.5" non-hot plug hard drives using a quick release drive carrier

Maximum Internal Storage	Non-Hot Plug SATA 3.5"	12.0 TB	4 x 3TB
	Non-Hot Plug SAS 3.5"	8.0TB	4 x 2TB
	Non-Hot Plug SATA 2.5"	8.0TB	8 x 1TB
	Non-Hot Plug SAS 2.5"	2.4TB	8 x 300GB
	Non-Hot Plug SATA SSD 2.5"	3.2TB	8 x 400GB

Interfaces	Serial (RJ-45)	1
	Parallel	None
	Network RJ-45	Two 10/100/1000 NIC ports
	Graphics	1
	Management	1 Dedicated iLO3 Management Port
	Health LED	1 front
	Power	1 front
	UID	1 front
	USB	2 (two front)

Standard Features

Industry Standard Compliance	ACPI 2.0b Compliant PCI 2.2 Compliant WOL Support Microsoft® Logo certifications PXE Support USB 1.1 and 2.0 Compliant SMBIOS 2.6.1
Graphics	ATI RN50/ES1000 w/ 64MB memory
HP Common Slot Power Supplies	HP has a new design for ProLiant power. The new Common Slot Power Supply provides the customer with commonality in power supplies across multiple platforms to save on the cost of spares and allows HP to offer multiple power solutions to fit the customers' needs. Many HP ProLiant Servers come with or compatible with high-efficiency HP CS Power Supplies. These power supplies are designed for highest efficiency to provide power efficiency without degrading performance of the ProLiant server. HP CS Power Supplies options for this server will have efficiency ratings up to 94%. There are several power options available, depending on the configuration of your server. To make sure you select the correct power supply to meet your configuration, we suggest that you use the HP Power Advisor to decide the "Right-Size" for your configuration. All HP Common Slot power sources are UL, CE Mark Compliant, Hot Plug and Redundant (redundancy dependent on node configurations).
System Fans	Non redundant model - 8 fans required Redundant model - redundant fan kit required
Operating Systems and Virtualization Software Support for ProLiant Servers	Microsoft Windows Server Red Hat Enterprise Linux (RHEL) SUSE Linux Enterprise Server (SLES) NOTE: For more information on HP's Certified and Supported ProLiant Servers for OS and Virtualization Software and latest listing of software drivers available for your server including how to purchase from HP, please visit our OS Support Site at: http://www.hp.com/go/ossupport
Form Factor	HP ProLiant s6500 Chassis - 4U HP ProLiant SL335s G7 1U half width server tray
UPS and PDU Power Cord Matrix	Please see the UPS and PDU cable matrix's on the HP Power Protection and Management page. Under Power Cords, click on the "HP Power Cord Matrix" link. That link will list cable descriptions, requirements, and specifications for UPS and PDU units. Please see the following link: www.hp.com/products/powercords.

Standard Features

HP Insight management software	HP Insight Foundation	HP provides management solutions that are designed to simplify a server's installation, configuration and maintenance throughout the entire server lifecycle. This provides the customer with higher levels of operational efficiency and highly reliable systems: www.hp.com/go/foundation. The foundation pack includes: • HP SmartStart • HP Management DVD • HP ProLiant Smart Update Firmware DVD SmartStart version supported (minimum): SmartStart 8.60. http://www.hp.com/servers/smartstart NOTE: In an effort to support reducing our environmental impact, the HP Insight Foundation Suite for ProLiant media will be available as a selectable option for this server at time of order of a CTO SKU. This will allow customers to order the number of media kits that best meet their needs and eliminate receiving unnecessary duplicate media.
	HP Integrated Lights-Out 3 (iLO 3)	HP Integrated Lights-Out 3 (iLO) simplifies server setup, health monitoring, power and thermal control, and lights-out remote administration of select ProLiant ML, DL, BL, and SL servers. HP iLO functions without additional software and can be accessed from any location via a web browser. Along with the iLO Standard features, the licensed features of HP iLO Advanced allows you to fully diagnose server problems without ever leaving your desk. With a full graphical view of your server, automatic video recording, and team collaboration capabilities, iLO Advanced eliminates unnecessary travel expenses and accelerates recovery from unplanned server outages. HP iLO Advanced also works hand-in-hand with HP Systems Insight Manager, Insight Control suites, and Insight Dynamics for ProLiant, helping customers unleash the value of the ProLiant platform and deliver the highest possible quality of IT service. For more information on iLO standard and iLO Advanced visit: www.hp.com/go/iLO

Security	Power-on password
	Keyboard password
	QuickLock, Network Server Mode
	Serial interface control
	Administrator's password
	iLO 3 (Integrated Lights-Out 3) has 12 customizable user accounts and SSL encryption
	iLO 3 can be disabled via a Global Setting
	iLO Advanced supports directory services integration

Standard Features

Warranty

This product is covered by a global limited warranty and supported by HP Services and a worldwide network of HP Authorized Channel Partners. Hardware diagnostic support and repair is available for one year from date of purchase. Support for software and initial setup is available for 90 days from date of purchase. Enhancements to warranty services are available through HP Care Pack services or customized service agreements. Hard drives have either a one year or three year warranty.
NOTE: Americas and EMEA Server Warranty includes 1 year Parts, 1 year Labor, 1-year on-site support with next business day response. APJ Server Warranty includes 3 year Parts, 3 year Labor, 3-year on-site support with next business day response. Warranty repairs may be accomplished through the use of Customer Self Repair (CSR) parts. These parts fall into two categories: 1) Mandatory CSR parts are designed for easy replacement. A travel and labor charge will result when customers decline to replace a Mandatory CSR part; 2) Optional CSR parts are also designed for easy replacement but may involve added complexity. Customers may choose to have HP replace Optional CSR parts at no charge. Additional information regarding worldwide limited warranty and technical support is available at: http://h18004.www1.hp.com/products/servers/platforms/warranty/index.html.

Optional Features

HP Insight management software	HP Insight Control	HP Insight Control, a product option, delivers essential infrastructure management that can help save time and money by making it easy to deploy, migrate, monitor, remote control, and optimize your IT infrastructure through a single, simple management console. Two versions of Insight Control are available, to serve environments requiring either a Linux-based or a Windows-based central management server: HP Insight Control for Linux, and HP Insight Control. See www.hp.com/go/insightcontrol HP Insight Control includes one year of 24 x 7 HP Software Technical Support and Update Service ensuring rapid access to HP support staff and proactive delivery of software updates. For more information about this service, please visit: http://www.hp.com/services/insight.
	HP Insight Dynamics for ProLiant	HP Insight Dynamics for ProLiant, a product option, is advanced infrastructure management software that enables IT staff to instantly adjust their environments to meet dynamic business demands by provisioning, optimizing and protecting complex infrastructure in minutes. It's a powerful toolkit, integrated-by-design, that accelerates complex technology projects and simplifies daily operations, transforming data center economics. With Insight Dynamics IT professionals can plan capacity and power continuously, balance workloads across physical and virtual resources, and ensure cost-effective high availability. It also enables IT organizations to provision infrastructure consistently and automatically from pools of shared resources using a self-service portal. Resources provisioned can range from a single virtual machine to complex multi-tier environments and their associated physical and virtual resource requirements. In addition to the previous functional benefits, it also provides a cost-effective disaster recovery for physical and virtual environments that works with HP Storage Continuous Access software for both the Enterprise Virtual Array and the XP storage array allowing application environments to be reactivated in minutes with the touch of a button to a remote location. NOTE: For more information, visit: http://www.hp.com/go/insightdynamics

Optional Features

High Performance Clusters	HP Cluster Platforms	HP Cluster Platforms are specifically engineered, factory-integrated large-scale ProLiant clusters optimized for High Performance Computing, with a choice of servers, networks and software. Operating system options include specially priced offerings for Red Hat Enterprise Linux and Novell SLES, as well as Microsoft Windows HPC Server. A Cluster Platform Configurator simplifies ordering. http://www.hp.com/go/clusters
	HP HPC Interconnects	High Performance Computing (HPC) interconnect technologies are available for this server as part of the HP Cluster Platform portfolio. These high-speed InfiniBand and Gigabit interconnects are fully supported by HP when integrated within an HP cluster. Flexible, validated solutions can be defined with the help of configuration tools. http://www.hp.com/techservers/clusters/ucp/index.html
	HP Cluster Management Utility	HP Cluster Management Utility (CMU) is an HP-licensed and HP-supported suite of tools that are used to manage large-scale Linux ProLiant systems. CMU includes software for the centralized provisioning, management and monitoring of nodes. CMU makes the administration of clusters user friendly, efficient, and effective. http://www.hp.com/go/cmu
	HP HPC Linux Value Pack	HP HPC Linux Value Pack (Value Pack) is an HP-licensed and HP-supported specially priced software bundle for the development and deployment of applications on HPC Cluster Platforms. Value Pack includes the Platform HPC Enterprise Edition suite of tools including the LSF workload scheduler, the HP-MPI parallelization library. Also included are the HP Unified Parallel C compiler and the HP Shmem library, as well as the execution environments for the libraries and compiler. HP HPC Linux Value Pack

Factory Express Portfolio for Servers and Storage

HP Factory Express offers configuration, customization, integration and deployment services for HP servers and storage products. Customers can choose how their factory solutions are built, tested, integrated, shipped and deployed.

Factory Express offers service packages for simple configuration, racking, installation, complex configuration and design services as well as individual factory services, such as image loading, asset tagging, and custom packaging. HP products supported through Factory Express include a wide array of servers and storage: HP Integrity, HP ProLiant, HP ProLiant Server Blades, HP BladeSystem, HP 9000 servers as well as the MSAxxxx, VA7xxx, EVA, XP, rackable tape libraries and configurable network switches.

For more information on Factory Express services for your specific server model please contact your sales representative or go to: http://www.hp.com/go/factory-express.

HP Enterprise Configurator

The HP eConfigure Enterprise Configurator now provides factory default racking for our HP hardware portfolio. This approach is aligned with our strategic direction to meet the needs and expectations of our valued customers. If you require "custom" rack configuration, please contact HP's Customer Business Center or an Authorized Partner for assistance. http://www.hp.com/products/configurator

Service and Support

For increased uptime, productivity and ROI - HP Care Pack packaged services for Servers

These days, you need to get the most out of your server investment - you can't afford not to. When you buy HP server products and solutions, it's also a good time to think about what levels of service and support you may need. To help take the worry out of deploying, designing, maintaining, and managing your environment, we've designed a portfolio of service options that are as: flexible, reliable and scalable as your server. Unlike server-only vendors, we take a holistic approach to your entire environment, bridging storage, servers, blades, software and network infrastructures with our HP Care Pack packaged services for Servers.

Protect your business beyond the warranty

When it comes to robustness and reliability, standard warranties on today's computing equipment have matured just as the technologies have matured. Good news on some fronts - but also a source of potential problems and subsequent consequences that come from depending on standard warranties alone. Standard warranty protects against product defects and some causes of downtime - but not the business. By using a standard approach to warranty uplifts, such as HP Care Pack Services, you can reduce downtime risks and be more certain of operational consistency for both mission-critical and standard business computing. Simply put, HP Care Pack Services normalize the warranty of combined products - helping you proactively guard against unplanned downtime.

Extending warranties with HP Care Pack Services

For cost-effective upgrading or extending your standard warranty, HP Care Pack Services offer a suite of standard reactive hardware and software support services that are sold separately, or combined as with our Support Plus and Support Plus 24 services. The portfolio also provides a combination of proactive and reactive services, such as Proactive 24 Service and Critical Service. In addition, with HP Proactive Select we offer an innovative approach to service delivery that gives you the flexibility to acquire the specific proactive services you need today, then add services as your needs evolve. HP Proactive Select offers a broad set of technical or per-event type service options - including server, storage, and network, SAN device, and software, environment, installation and education services. Services that you can mix and match depending on your specific requirements, from preliminary planning and equipment delivery to installation, configuration, integration, and testing, through every level of ongoing support. Our HP Care Pack packaged services for Servers assures help when you need it most. And for many products, post-warranty HP Care Pack Services are available when your original warranty has expired.

HP Server Services: Offering reliability, flexibility and value - just like your storage

HP Server Services offers a full spectrum of customer care, from technology support to complex migrations to complete completely managed services. HP Factory Express provides customization, integration and deployment services for turnkey solutions. HP Education offers flexible, comprehensive training on server networking and server software to help your IT staff get the most out of your investments. And HP Financial solutions extend innovative financing and asset management programs to cost-effective buy, manage and eventually retire your older equipment.

HP Server Services, the trusted business technology experts who manage your technology in action, because when technology works, business works. http://www.hp.com/services/servers, http://www.hp.com/services/storage

HP Care Pack Services are sold by HP and HP Authorized Service Partners:

- Services for customers purchasing from HP or an enterprise reseller are quoted using HP order configuration tools.
- Customers purchasing from a commercial reseller can find HP Care Pack Services at: http://www.hp.com/go/lookuptool

NOTE: Care Pack Services availability may vary by product and country.

Optimized Care	Optimized Care Package: Supports maintaining servers at optimum performance availability HP ProLiant Server Hardware Installation Provides for the basic hardware installation of HP branded servers, storage devices and networking options to assist you in bringing your new hardware into operation in a timely and professional manner http://h20195.www2.hp.com/V2/GetPDF.aspx/5981-9356EN HP Installation and Startup for Insight Control Software Provides for the deployment and basic configuration of HP Insight Control on HP ProLiant ML and DL series servers or HP BladeSystem servers http://h20195.www2.hp.com/v2/GetPDF.aspx/4AA0-9972ENW.pdf 3-Year HP Critical Advantage Provides end-to-end infrastructure support solution for business critical applications running on virtualized/x86 infrastructures, enabling the customers to cost effectively build, operate, and continuously improve their IT environment http://h20195.www2.hp.com/V2/GetDocument.aspx?docname=4AA3-1772ENW Additional Services: Data Center Transformation Service
Standard Care	Standard Care Package: Package that maintains high level of server availability HP ProLiant Server Hardware Installation Provides for the basic hardware installation of HP branded servers, storage devices and networking options to assist you in bringing your new hardware into operation in a timely and professional manner http://h20195.www2.hp.com/V2/GetPDF.aspx/5981-9356EN HP Installation and Startup for Insight Control Software Provides for the deployment and basic configuration of HP Insight Control on HP ProLiant ML and DL series servers or HP BladeSystem servers http://h20195.www2.hp.com/v2/GetPDF.aspx/4AA0-9972ENW.pdf 3-Year HP 6 hour Hardware Support Onsite Call-to-Repair Service Provides an IT manager with a team of support specialists who will quickly begin troubleshooting the system to help return the hardware to operating condition within 6 hours of the initial service request to the HP Global Solution Center http://h20195.www2.hp.com/V2/GetPDF.aspx/5982-6547EN.pdf 3-Year, HP 24x7 Software Support for Insight Control Provides for the deployment and basic configuration of HP Insight Control on HP ProLiant ML and DL series servers or HP BladeSystem servers http://h20195.www2.hp.com/V2/GetPDF.aspx/5981-6645EEE.pdf Additional Services: Software OS (Microsoft, Linux (SUSE/Red Hat) & VMware Installation & Start Up and Software Support); Microsoft or Linux or VMware education courses; +60 Proactive Select Credits

Service and Support

Basic Care	Basic Care Package: delivers minimum recommended support service level HP ProLiant Server Hardware Installation Provides for the basic hardware installation of HP branded servers, storage devices and networking options to assist you in bringing your new hardware into operation in a timely and professional manner http://h20195.www2.hp.com/V2/GetPDF.aspx/5981-9356EN HP Installation and Startup for Insight Control Software Provides for the deployment and basic configuration of HP Insight Control on HP ProLiant ML and DL series servers or HP BladeSystem servers http://h20195.www2.hp.com/v2/GetPDF.aspx/4AA0-9972ENW.pdf 3-Year HP 24x7 4 hour Response, Hardware Support Onsite Service Provides for the deployment and basic configuration of HP Insight Control on HP ProLiant ML and DL series servers or HP BladeSystem servers http://h20195.www2.hp.com/v2/GetPDF.aspx/4AA0-9972ENW.pdf 3-Year, HP 24x7 Software Support for Insight Control Provides for the deployment and basic configuration of HP Insight Control on HP ProLiant ML and DL series servers or HP BladeSystem servers http://h20195.www2.hp.com/V2/GetPDF.aspx/5981-6645EEE.pdf Additional Services: Software OS (Microsoft, Linux (SUSE/Red Hat) & VMware Installation & Start Up and Software Support); +30 Proactive Select Credits, Factory Express
Insight Remote Support	The packages include HP Insight Remote Support that uses proven technology to deliver secure, reliable 24x7 remote monitoring, diagnoses, and problem resolution. It is available at no additional cost to all warranty, HP Care Pack Service, and service agreement customers.
For more information	To learn more on HP ProLiant servers and HP BladeSystem servers, please contact your HP sales representative or HP Authorized Channel Partner. Or visit: http://www.hp.com/services/proliant

NOTE: This section lists some of the steps required to configure a Factory Integrated Model. To ensure only valid configurations are ordered, HP recommends the use of an HP approved configurator. Contact your local sales representative for information on configurable product offerings and requirements.
NOTE: Configure-to-order (CTO) servers must start with a CTO Chassis.
NOTE: FIO indicates that this option is only available as a factory installable option.

Step 1: Base Configuration (choose one from each list unless otherwise noted)

HP Chassis	NOTE: If you already have an s6500 chassis skip to Step 1A below.	
	HP ProLiant s6500 w/o Fans 4U Configure-to-order Chassis NOTE: You must choose Power Supplies and fans as the chassis does not include them.	614167-B21
HP Chassis Fans	HP s6500 Redundant Fan Kit NOTE: This kit includes only 1 fan NOTE: This selection must be ordered in quantities of 8.	617856-B21
	HP s6500 Non-Redundant Fan Kit NOTE: This kit includes only 1 fan NOTE: This selection must be ordered in quantities of 8.	617858-B21
HP Rail Kits	HP s6500 4U 3rd Party Rail KIT	601946-B21
	HP s6500 4U Rail KIT	599109-B21
HP Power Supplies	NOTE: Prior to making a power supply selection it is highly recommended that the HP Power Advisor is run to determine the right size power supply for your server configuration. The HP Power Advisor is located at: www.hp.com/go/hppoweradvisor	
	HP 750W Common Slot Gold Hot Plug Power Supply Kit	512327-B21
	HP 750W Common Slot Platinum Hot Plug Power Supply Kit	593831-B21
	HP 1200W Common Slot Silver Hot Plug Power Supply Kit	500172-B21
	HP 1200W Common Slot Platinum Hot Plug Power Supply Kit	578322-B21
	NOTE: Option Kits contain optional power supply, an IEC power cable and PDU IEC cables.	

Step 2: Choose Required Node Options (only one of the following from each list unless otherwise noted)

HP Memory	Registered DIMMs (RDIMMs)	
	HP 2GB (1x2GB) Dual Rank x8 PC3-10600 (DDR3-1333) Registered CAS-9 Memory Kit	593907-B21
	HP 4GB (1x4GB) Single Rank x4 PC3-10600 (DDR3-1333) Registered CAS-9 Memory Kit	652504-B21
	HP 4GB (1x4GB) Single Rank x4 PC3L-10600 (DDR3-1333) Registered CAS-9 Low Power Memory Kit	604500-B21
	HP 8GB (1x8GB) Dual Rank x4 PC3-10600 (DDR3-1333) Registered CAS-9 Memory Kit	593913-B21
	HP 8GB (1x8GB) Dual Rank x4 PC3L-10600 (DDR3-1333) Registered CAS-9 Low Power Memory Kit	604502-B21
	HP 16GB (1x16GB) Quad Rank x4 PC3-8500 (DDR3-1066) Registered CAS-7 Memory Kit	593915-B21

HP 16GB (1x16GB) Dual Rank x4 PC3L-10600 (DDR3-1333) Registered CAS-9 LP Memory Kit	627808-B21
Unbuffered with ECC DIMMs (UDIMMs)	
HP 2GB (1x2GB) Dual Rank x8 PC3-10600 (DDR3-1333) Unbuffered CAS-9 Memory Kit	593921-B21
HP 4GB (1x4GB) Dual Rank x8 PC3-10600 (DDR3-1333) Unbuffered CAS-9 Memory Kit	593923-B21

NOTE: All DDR3 memory option kits consist of one DIMM per kit. For detailed memory configuration rules and guidelines, please use the Online DDR3 Memory Configuration Tool: www.hp.com/go/ddr3memory-configurator.
NOTE: Kits described as LP include Low Power DIMMs. For more information on ProLiant Energy Efficient Features, see: http://www.hp.com/go/proliant-energy-efficient
NOTE: There is a maximum support limitation of 8 ranks per memory channel (maximum of 1 quad rank DIMM and 2 dual rank DIMMs per channel)
NOTE: PC3L is a low voltage memory.

Step 3: Choose Additional Factory Integratable Options (only one of the following from each list unless otherwise noted)

HP Storage Controllers

NOTE: To support HP hard drives exceeding 2.2 TB, a HP Smart Array controller is required.

HP Smart Array P212/256 BBWC 1-ports Int/1-ports Ext PCIe x8 FIO SAS Controller NOTE: HP s6500 HW Internal PCIe Riser Cage Kit (604851-B21), HP SAS/PWR Cable P212 Half Width Kit (658608-B21) and HP s6500 BBWC Mounting Kit (610684-B21) are required when adding SAS hard drives using the P212 controller with BBWC.	491191-B21
HP Smart Array P410/ZM 2-ports Int PCIe x8 FIO SAS Controller NOTE: HP s6500 HW Internal PCIe Riser Cage Kit (604851-B21), HP s6500 SAS Enablement Kit (610682-B21) is required when adding SAS hard drives using the P410 controller.	462860-B21
HP Smart Array P410/256 BBWC 2-ports Int PCIe x8 FIO SAS Controller NOTE: HP s6500 HW Internal PCIe Riser Cage Kit (604851-B21), HP s6500 SAS Enablement Kit (610682-B21) and HP s6500 BBWC Mounting Kit (610684-B21) are required when adding SAS hard drives using the P410 controller with BBWC.	491195-B21

NOTE: For additional Storage Controller options refer to the Additional Options section of this QuickSpecs. Only FIO options are displayed here.

Step 4: Choose Additional Options for Factory Integration

NOTE: For additional options, please refer to the "Core Options" and "Additional Options" section below.

Core Options

NOTE: Some options may not be integrated at the factory. To ensure only valid configurations are ordered, HP recommends the use of an HP approved configurator. Contact your local sales representative for additional information.

HP Unique Options	HP s6500 Half-width Tray Node Blank Kit NOTE: Node blank is needed when removing half width tray for service. NOTE: Node blank is needed when not completely filling s6500 chassis. NOTE: 1 node blank kit is needed for every 1U half width space left in chassis.	622372-B21
	HP s6500 Redundant Fan Kit NOTE: It is required that the entire chassis be filled with fans - Part number only contains 1 fan, 8 must be purchased.	617856-B21
	HP s6500 Non-Redundant Fan Kit NOTE: It is required that the entire chassis be filled with fans - Part number only contains 1 fan, 8 must be purchased.	617858-B21
	HP s6500 Chassis Handles Kit	608477-B21
	HP s6500 BBWC Mounting Kit NOTE: This kit must be included if ordering any BBWC option for the Smart Array Controller.	610684-B21
	HP s6500 SAS Enablement Kit NOTE: This kit provides the cable for connecting the Smart Array P410 Controller to the system board.	610682-B21
	HP P212 Half Width SAS Power Cable Kit NOTE: This kit provides the cable for connecting the Smart Array P212 Controller to the system board.	658608-B21
	HP s6500 SFF Enablement Kit NOTE: This kit includes the hardware that holds the stacked SFF HDDs and power cables and is required when ordering SFF HDDs. Order one kit for every two SFF HDDs.	607247-B21
	HP SL335s 5 and 6 Small Form Factor (SFF) Hard Drive Enablement Kit NOTE: This kit includes the cables for attaching the 5th and 6th SATA SFF HDDs. This kit is not needed if only attaching up to 4 SATA SFF HDDs.	658097-B21
	HP s6500 4U 3rd Party Rail KIT	601946-B21
	HP s6500 4U Rail KIT	599109-B21
HP Processors	Six-Core Processors	
	HP SL335s AMD Opteron™ 4184 (2.80GHz/6-core/6MB/75W) Processor Kit	631645-B21
	HP SL335s AMD Opteron™ 4176HE (2.40GHz/6-core/6MB/50W) Processor Kit	631643-B21
	HP SL335s AMD Opteron™ 4162EE (1.70GHz/6-core/6MB/32W) Processor Kit	614043-B21
	Quad-Core Processors	
	HP SL335s AMD Opteron™ 4130 (2.60GHz/4-core/6MB/75W) Processor Kit	629223-B21

Core Options

HP Memory	Registered DIMMs (RDIMMs)	
	HP 2GB (1x2GB) Dual Rank x8 PC3-10600 (DDR3-1333) Registered CAS-9 Memory Kit	593907-B21
	HP 4GB (1x4GB) Single Rank x4 PC3-10600 (DDR3-1333) Registered CAS-9 Memory Kit	652504-B21
	HP 4GB (1x4GB) Single Rank x4 PC3L-10600 (DDR3-1333) Registered CAS-9 Low Power Memory Kit	604500-B21
	HP 8GB (1x8GB) Dual Rank x4 PC3-10600 (DDR3-1333) Registered CAS-9 Memory Kit	593913-B21
	HP 8GB (1x8GB) Dual Rank x4 PC3L-10600 (DDR3-1333) Registered CAS-9 Low Power Memory Kit	604502-B21
	HP 16GB (1x16GB) Quad Rank x4 PC3-8500 (DDR3-1066) Registered CAS-7 Memory Kit	593915-B21
	HP 16GB (1x16GB) Dual Rank x4 PC3L-10600 (DDR3-1333) Registered CAS-9 LP Memory Kit	627808-B21
	Unbuffered with ECC DIMMs (UDIMMs)	
	HP 2GB (1x2GB) Dual Rank x8 PC3-10600 (DDR3-1333) Unbuffered CAS-9 Memory Kit	593921-B21
	HP 4GB (1x4GB) Dual Rank x8 PC3-10600 (DDR3-1333) Unbuffered CAS-9 Memory Kit	593923-B21
	NOTE: All DDR3 memory option kits consist of one DIMM per kit. For detailed memory configuration rules and guidelines, please use the Online DDR3 Memory Configuration Tool: www.hp.com/go/ddr3memory-configurator. NOTE: Kits described as LP include Low Power DIMMs. For more information on ProLiant Energy Efficient Features, see: http://www.hp.com/go/proliant-energy-efficient NOTE: There is a maximum support limitation of 8 ranks per memory channel (maximum of 1 quad rank DIMM and 2 dual rank DIMMs per channel) NOTE: PC3L is a low voltage memory.	

HP Hard Drives	NOTE: The components of a storage subsystem (e.g. the drive, the HBA/controller, firmware, and the server backplane) should operate at the same data transfer rate or the system bandwidth will be negotiated down to an acceptable level for all components. NOTE: To support HP hard drives exceeding 2.2TB, a HP Smart Array Controller is required. NOTE: Hard drives have either a one year or three year warranty. NOTE: The non-hot plug hard drives use a quick release carrier.	
	SAS Non-Hot Plug LFF (3.5-inch) Enterprise (ENT) Drives - with quick-release (QR) carrier	
	HP 600GB 6G SAS 15K rpm LFF (3.5-inch) Quick-release Dual Port Enterprise 3yr Warranty Hard Drive	574758-B21
	HP 300GB 6G SAS 15K rpm LFF (3.5-inch) Quick-release Dual Port Enterprise 3yr Warranty Hard Drive	585980-B21

SAS Non-Hot Plug SFF (2.5-inch) Enterprise (ENT) Drives - with quick-release (QR) carrier	
NOTE: the HP s6500 SFF Enablement Kit (607247-B21) must be ordered when ordering SFF HDDs. This kit includes the hardware which holds two SFF HDDs and includes the power cable for the drives. Order one kit for every 2 SFF HDDs.	
HP 300GB 6G SAS 10K rpm SFF (2.5-inch) Quick-release Dual Port Enterprise 3yr Warranty Hard Drive	574879-B21
SAS Non-Hot Plug LFF (3.5-inch) Midline (MDL) Drives - with quick-release (QR) carrier	
HP 2TB 6G SAS 7.2K rpm LFF (3.5-inch) Quick-release Dual Port Midline 1yr Warranty Hard Drive	574761-B21
SATA Non-Hot Plug LFF (3.5-inch) Midline (MDL) Drives - with quick-release (QR) carrier	
HP 3TB 3G SATA 7.2K rpm LFF (3.5-inch) Quick Release Midline 1yr Warranty Hard Drive	642098-B21
HP 2TB 3G SATA 7.2K rpm LFF (3.5-inch) Quick-release Midline 1yr Warranty Hard Drive	574755-B21
HP 1TB 3G SATA 7.2K rpm LFF (3.5-inch) Quick-release Midline 1yr Warranty Hard Drive	574025-B21
HP 500GB 3G SATA 7.2K rpm LFF (3.5-inch) Quick-release Midline 1yr Warranty Hard Drive	574023-B21
SATA Non-Hot Plug SFF (2.5-inch) Midline (MDL) Drives - with quick-release (QR) carrier	
NOTE: the HP s6500 SFF Enablement Kit (607247-B21) must be ordered when ordering SFF HDDs. This kit includes the hardware which holds two SFF HDDs and includes the power cable for the drives. Order one kit for every 2 SFF HDDs.	
HP 1TB 3G SATA 7.2K rpm SFF (2.5-inch) Quick-release Midline 1yr Warranty Hard Drive	627632-B21
HP 500GB 3G SATA 7.2K rpm SFF (2.5-inch) Quick-release Midline 1yr Warranty Hard Drive	574953-B21
SATA Non-Hot Plug SFF (2.5-inch) Enterprise Mainstream Solid State Drives - with quick-release (QR) carrier	
HP 400GB 3G SATA MLC SFF (2.5-inch) Quick-release Enterprise Mainstream 3yr Wty Solid State Drive	636625-B21
HP 200GB 3G SATA MLC SFF (2.5-inch) Quick-release Enterprise Mainstream 3yr Wty Solid State Drive	636623-B21
HP 100GB 3G SATA MLC SFF (2.5-inch) Quick-release Enterprise Mainstream 3yr Wty Solid State Drive	636621-B21

Core Options

HP Power Supplies	NOTE: Prior to making a power supply selection it is highly recommended that the HP Power Advisor is run to determine the right size power supply for your server configuration. The HP Power Advisor is located at: www.hp.com/go/hppoweradvisor	
	HP 750W Common Slot Gold Hot Plug Power Supply Kit	512327-B21
	HP 750W Common Slot Platinum Hot Plug Power Supply Kit	593831-B21
	HP 1200W Common Slot Silver Hot Plug Power Supply Kit	500172-B21
	HP 1200W Common Slot Platinum Hot Plug Power Supply Kit	578322-B21
	NOTE: Option Kits contain optional power supply, an IEC power cable and PDU IEC cables.	

NOTE: Some options may not be integrated at the factory. To ensure only valid configurations are ordered, HP recommends the use of an HP approved configurator. Contact your local sales representative for additional information.

HP Insight Software	HP Insight Control	
	HP Insight Management Media Kit NOTE: HP Insight Management Media Kit contains DVDs without licenses. Contains HP Systems Insight Manager, HP Insight Control, HP Matrix Operating Environment, and Virtual Connect Enterprise Manager software. Uses an integrated installer to perform quick and accurate software installation and updates. NOTE: Licenses ship without media. The HP Insight Control Media Kit can be ordered separately, or can be downloaded at: http://www.hp.com/go/insightupdates. NOTE: For additional license options please see the Insight Control QuickSpecs at: http://h18000.www1.hp.com/products/quickspecs/12631_div/12631_div.html	436222-B21
	HP Insight Control for Linux	
	HP Insight Control for Linux including 1yr 24x7 Support Electronic License	TC213AAE
	HP Insight Control for Linux including 1yr 24x7 Support Single Server License	TC209A
	HP Insight Control for Linux Media Kit NOTE: Media pack DVD contains the ISO image for HP Insight Control for Linux, HP Systems Insight Manager, HP Insight Control power management, HP Insight Control virtual machine management, and an integrated installer. Servers must be acquired separately. NOTE: Licenses ship without media. The Media Kit for Insight Control for Linux can be ordered separately, or can be downloaded at: http://www.hp.com/go/ic-linux (click on Download button). NOTE: Electronic software is available in all countries except China and Japan. Customers in China and Japan should order the physical equivalent. NOTE: Electronic and Flexible-Quantity licenses can be used to purchase multiple licenses with a single set of activation keys. NOTE: For additional License Kits, including electronic licensing options, please see the QuickSpecs at: http://h18000.www1.hp.com/products/quickspecs/13019_div/13019_div.html	TC208A
	HP Integrated Lights-Out (iLO) Advanced	
	HP iLO Advanced Pack Electronic License with 3yr 24x7 Tech Support and Updates	BD506AAE
	HP iLO Advanced 1 Server License with 3yr 24x7 Tech Support and Updates NOTE: This license allows 1 server to be deployed and managed via HP iLO Advanced. Customer will receive a printed license entitlement certificate via physical shipment. The license entitlement certificate must be redeemed online or via fax in order to obtain the license activation key(s). Includes one year of 24 x 7 HP Software Technical Support Service NOTE: Electronic software is available in all countries except China and Japan. Customers in China and Japan should order the physical equivalent. NOTE: For additional license kits, including electronic delivery options, please see the QuickSpecs at: http://h18000.www1.hp.com/products/quickspecs/12362_div/12362_div.html	BD505A
	HP Insight Control server deployment	
	HP Insight Control Server Deployment including 1yr 24x7 Support Electronic License	T9082AAE
	HP Insight Control Server Deployment including 1yr 24x7 Support Single Server License	452151-B21

NOTE: Licenses ship without media. The Insight Control Media Kit can be ordered separately, or can be downloaded at: http://www.hp.com/go/insightupdates.
NOTE: Electronic licenses can be used to purchase multiple licenses with a single activation key, and is available in all countries except China and Japan. Customers in China and Japan should order the physical equivalent.
NOTE: Customer will receive a license entitlement certificate, which must be redeemed online or via fax in order to obtain the license activation key(s). Includes one year of 24 x 7 HP Software Technical Support Service.
NOTE: For additional license kits please see the Insight Control QuickSpecs at: http://h18004.www1.hp.com/products/quickspecs/12631_div/12631_div.html

---

High Performance Clusters

HP Cluster Management Utility

HP Cluster Management Utility Flexible License — QL803B
NOTE: This part number can be used to purchase one certificate for multiple licenses with a single activation key. Each license is for one node (server). Customer will receive a printed end user license agreement and license entitlement certificate via physical shipment. The license entitlement certificate must be redeemed online in order to obtain a license key.

HP Insight CMU Flexible License with 3 years of 24x7 updates and technical support — BD476A
NOTE: These part numbers can be used to purchase one certificate for multiple licenses and support with a single activation key. Each license is for one node (server). Customer will receive a printed end user license agreement and license entitlement certificate via physical shipment. The license entitlement certificate must be redeemed online in order to obtain a license key. Customer also will receive a support agreement.

HP Insight CMU Media — BD477A

NOTE: For additional license kits please see the QuickSpecs at: http://h18004.www1.hp.com/products/quickspecs/12612_div/12612_div.html

HP HPC Linux Value Pack

HP High Performance Computing Linux Value Pack 1 Processor Flexible License — TC293B
NOTE: This part number can be used to purchase one certificate for multiple licenses with a single activation key. Each license is for one socket (a.k.a. processor). Customer will receive a printed end user license agreement and license entitlement certificate via physical shipment. The license entitlement certificate must be redeemed online in order to obtain a license key.

HP High Performance Computing Linux Value Pack Media Kit — TC294A
NOTE: This part number can be used to purchase media including software and documentation, which will be delivered to the customer.

NOTE: For additional license kits please see the QuickSpecs at: http://h18004.www1.hp.com/products/quickspecs/13485_div/13485_div.html

---

Additional Options

HP SL Advanced Power Manager

The SL Advanced Power Manager is an optional rack level solution for the HP ProLiant SL6500 which enables server-level DC (or hardware) power on and off and server-level monitoring. In addition, the SL APM will automatically discover SL hardware components which are connected into the SL APM solution.

The SL APM does not replace rack PDUs, but is designed to enable the utilization of basic, low cost, rack PDUs while providing the functionality of 'switched' PDUs which provide hardware power on/off of individual servers by turning off the AC power to the power supplies of a given server. Because the SL servers share power supplies to optimize power efficiency, using 'switched' PDUs to turn off the power supplies in the chassis will result in the loss of all servers in that chassis. The SL APM solves this by allowing server-level hardware power on/off of the DC power to the individual server motherboards.

HP SL Advanced Power Manager Kit	538084-B21
HP SL Advanced Power Manager Distribution Module Kit	620002-B21

HP Security

HP Trusted Platform Module Option	488069-B21

NOTE: The TPM (Trusted Platform Module) is a microcontroller chip that can securely store artifacts used to authenticate the server platform. These artifacts can include passwords, certificates and encryption keys. Windows® BitLocker™ Drive Encryption (BitLocker) is a data protection feature available in Windows Server® 2008. BitLocker leverages the enhanced security capabilities of a Trusted Platform Module (TPM) version 1.2. The TPM works with BitLocker to help protect user data and to ensure that a server running Windows Server 2008 has not been tampered with while the system was offline. For more information about TPM, including a white paper, go to: www.hp.com/go/TPM.

NOTE: ProLiant OS pre-installed units will come with the partition required for TPM deployment.

NOTE: The TPM key is unique to every TPM deployed server and must be retained. Misplacing or losing the key could result in data loss.

HP Storage Controllers

NOTE: To support HP hard drives exceeding 2.2TB, HP Smart Array Firmware version 5.0 or later is required for the P212 and P410 controllers.

SAS Controllers

Smart Array P212 Controller

NOTE: The HP SAS/PWR Cable P212 Half Width Kit (658608-B21) is required when using the P212 controller.

HP Smart Array P212/ZM 1-ports Int/1-ports Ext PCIe x8 SAS Controller	462828-B21
HP Smart Array P212/256 1-ports Int/1-ports Ext PCIe x8 SAS Controller	462834-B21

Smart Array P410 Controller

NOTE: The HP s6500 SAS Enablement Kit (610682-B21) is required when using the P410 Controller.

HP Smart Array P410/256 2-ports Int PCIe x8 SAS Controller	462862-B21
HP Smart Array P410/512 BBWC 2-ports Int PCIe x8 SAS Controller	462864-B21
HP Smart Array P410/512 FBWC 2-ports Int PCIe x8 SAS Controller	578230-B21
HP Smart Array P410/1G FBWC 2-ports Int PCIe x8 SAS Controller	572532-B21

Optional Upgrades

Additional Options

	HP 512MB P-Series Battery Backed Write Cache Upgrade NOTE: Supported on HP Smart Array P410 Controller only.	462967-B21
	HP 1GB Flash Backed Cache	534562-B21
	NOTE: Please see the following QuickSpecs for Technical Specifications and additional information: http://h18000.www1.hp.com/products/quickspecs/13203_div/13203_div.html (Smart Array P212 Controller) http://h18000.www1.hp.com/products/quickspecs/13201_div/13201_div.html (Smart Array P410 Controller)	

HP Power Cords	NOTE: HP ProLiant servers ships with an IEC-IEC power cord used for rack mounting with Power Distribution Units (PDUs).	
	HP 1.83m 10A C13 CZ Power Cord	AF565A
	HP 1.83m 10A C13 DK Power Cord	AF566A
	HP 1.83m 10A C13 EU Power Cord	AF568A
	HP 1.83m 10A C13 Power Cord	AF564A
	HP 1.83m 10A C13 NBR14136 Brazil Power Cord	AF591A
	HP 1.83m 10A C13 UK Power Cord	AF570A
	HP 1.83m 10A C13 IT/CL Power Cord	AF571A
	HP 2.5m 16A C13 IS1293 India Power Cord	SG579A
	HP 1.83m 10A C13 Power Cord	AF569A
	HP 2.5m 10A C13 ZA Power Cord	AF567A
	HP 2m C13 Japan Power Cord	AF572A
	HP 1.83m 10A C13 Power Cord	AF557A
	HP 1.83m 10A C13 Power Cord	AF560A
	HP 1.83m 10A C13 Power Cord	AF561A
	HP 1.83m 10A C13 Power Cord	AF559A
	HP 1.83m 10A C13 Power Cord	AF556A
	HP 2.0m 10A C13 Power Cord	AF562A
	HP 2.5m 10A C13 Power Cord	AF558A
	HP 2m 10A C13-C14 Redundant Jumper Cord	AF573A

Additional Options

HP Rack Series	HP Rack 10000 G2 Series (Carbon/Graphite Metallic)	
	HP 10642 G2 1200mm deep Shock Rack	AF092A
	HP 10647 G2 1200mm deep Shock Rack	AF094A

NOTE: It is mandatory to use a shock pallet when shipping racks with equipment installed.

NOTE: Please see the QuickSpecs for Technical Specifications and additional information: http://h18000.www1.hp.com/products/quickspecs/12402_div/12402_div.html (Worldwide)

NOTE: For additional information regarding Rack Cabinets and Telco Rack support, please see the following URL: http://www.hp.com/go/rackandpower.

NOTE: The increasing power of new high-performance processor technology requires increased cooling efficiency for rack-mounted servers. The 10000 Series Racks provide enhanced airflow for maximum cooling, allowing these racks to be fully loaded with servers using the latest processors.

CAUTION: If a third-party rack is used, observe the following additional requirements to ensure adequate airflow and to prevent damage to the equipment: Front and rear doors: If your 42U server rack includes closing front and rear doors, you must allow 830 square inches (5,350 sq cm) of hole evenly distributed from top to bottom to permit adequate airflow (equivalent to the required 64 percent open area for ventilation). Side: The clearance between the installed rack component and the side panels of the rack must be a minimum of 2.75 inches (7 cm).

CAUTION: Always use blanking panels to fill all remaining empty front panel U-spaces in the rack. This arrangement ensures proper airflow. Using a rack without blanking panels results in improper cooling that can lead to thermal damage.

NOTE: Quick deploy rail system provides tool-free support for racks with square or round mounting holes (including Compaq/HP 7000, 9000, 10000 G2 and HP series), with an adjustment range of 24" - 36". The ambidextrous cable management arm can be mounted on either the left or right side for improved cable management.

HP ProLiant SL335s G7 Server

NOTE: Memory configurations listed do not apply to "Factory Integrated Models".

NOTE: Chart does not represent all possible memory configurations.

DDR3 memory population guidelines

For detailed memory configuration rules and guidelines, please use the Online DDR3 Memory Configuration Tool: www.hp.com/go/ddr3memory-configurator

Some DIMM installation guidelines are summarized below:

- For this server with twelve (12) memory slots:
  - There are two (2) channels per processor; four (4) channels per server
  - There are three (3) DIMM slots for each memory channel; twelve (12) total slots
  - Memory channel 2 consists of the three (3) DIMMs that are closest to the processor
  - Memory channel 1 consists of the three (3) DIMMs that are furthest from the processor
- DIMM slots that are white should be populated first
- Do not mix Unbuffered memory (UDIMMs) with Registered memory (RDIMMs)
- Do not install DIMMs if the corresponding processor is not installed
- If only one processor is installed in a 2CPU system, only half of the DIMM slots are available
- To maximize performance, balance the total memory capacity between all installed processors
- It is not required, but it is recommended to load the channels similarly if possible
- You can only install one quad-rank DIMM per channel and it must be in center slot.
- You can only install two UDIMMs per channel; if available, the third slot in the channel must remain empty
- If mixing DIMM voltage is a requirement, please note that the DIMMs will run at 1.5V since all 1.35V are capable of supporting 1.5V operations

DIMM slot/capacity/populated speed table							
DIMM Type	Registered DIMMS (RDIMMs)					Unbuffered with ECC DIMMs (UDIMMs)	
DIMM Rank	Single Rank (1R)	Dual Rank (2R)			Quad Rank (4R)	Single Rank (1R) Dual Rank (2R)	
DIMM Capacity	4GB	2GB	8GB	16GB	16GB	2GB	4GB
DIMM Native Speed (MHz)	1333	1333	1333	1333	1066	1333	1333
Wattage	LV/Std	Std	LV/Std	LV/Std	Std	Std	Std
SLOTS THAT CAN BE POPULATED							
12 slot servers	12	12	12	12	4	8	8
MAXIMUM CAPACITY (GB)							
12 slot servers	48	24	96	192	64	16	32
POPULATED DIMM SPEED (MHz)							
1 DIMM Per Channel	1333	1333	1333	1333	1066	1333	1333
2 DIMM Per Channel	1333	1333	1333	1333	n/a	1333	1333
3 DIMM Per Channel	1333	1066	1066	800/1066*	n/a	n/a	n/a

NOTES:

Memory

- PC3-10600 DIMMs have a maximum speed of 1333MHz. PC3-8500 DIMMs have a maximum speed of 1066MHz
- Mixing DIMM speeds is allowed, but the system processor speed rules always override the DIMM capabilities
- If you do mix DIMM speeds, the memory bus will default to the minimum clock rate of all DIMMs in the system - even if the slower DIMM is on the other processor
- If you install 1x 1066MHz DIMM in channel 1 and 1x 1333MHz DIMM in channel 2, the maximum speed will be 1066MHz If you install 1x 1066MHz DIMM in channel 1 and 5x 1333MHz DIMMs with 1 DIMM Per Channel (DPC) in each of the other channels, the maximum speed will be 1066MHz
- Maximum memory speed will also depend on the processor installed
- References to the above MHz speeds are for the various speeds of DDR3 DIMMs; 1333 refers to DDR3-1333, etc.

DIMM slot and configuration diagrams
Basic memory slot & population diagram

- Population order; start with "A" first, "B" second, "C" third, etc.

12 DIMM SLOTS (6 per CPU)					
	CPU1		CPU2		
	slot #	population order	slot #	population order	
Chnl 1	1	A	1	A	Chnl 1
	2	E	2	E	
	3	C	3	C	
Chnl 2	4	B	4	B	Chnl 2
	5	F	5	F	
	6	D	6	D	
Note, slots 1 and 4 are furthest from the CPU, slots 3 and 6 are closest.					

RDIMM maximum configuration (2 CPU model)

- 192GB, consisting of twelve (12) 16GB Dual-Ranked PC3L-10600 RDIMMs

	CPU1		CPU2		
	slot #	population order	slot #	population order	
Chnl 1	1	A; 16GB DIMM	1	A; 16GB DIMM	Chnl 1
	2	E; 16GB DIMM	2	E; 16GB DIMM	
	3	C; 16GB DIMM	3	C; 16GB DIMM	
Chnl 2	4	B; 16GB DIMM	4	B; 16GB DIMM	Chnl 2
	5	F; 16GB DIMM	5	F; 16GB DIMM	
	6	D; 16GB DIMM	6	D; 16GB DIMM	

UDIMM maximum configuration (2 CPU model)

- 32GB, consisting of eight (8) 4GB dual-rank PC3-10600 UDIMMs

Memory

	CPU1		CPU2		
	slot #	population order	slot #	population order	
Chnl 1	1	A; 4GB DIMM	1	A; 4GB DIMM	Chnl 1
	2	E; Empty	2	E; Empty	
	3	C; 4GB DIMM	3	C; 4GB DIMM	
Chnl 2	4	B; 4GB DIMM	4	B; 4GB DIMM	Chnl 2
	5	F; Empty	5	F; Empty	
	6	D; 4GB DIMM	6	D; 4GB DIMM	

NOTE: Capacity references are rounded to the common Gigabyte values.

- 1GB = 1024MB
- 2GB = 2048MB
- 4GB = 4096MB
- 8GB = 8192MB
- 16GB = 16384MB

DDR3 memory options part number decoder

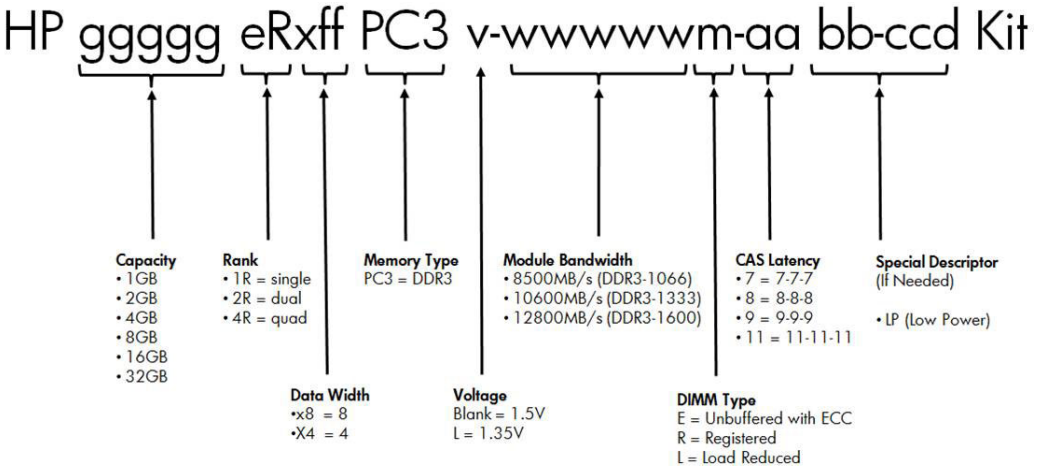

Following are memory options available from HP:

HP Memory	Registered DIMMs (RDIMMs)	
	HP 2GB (1x2GB) Dual Rank x8 PC3-10600 (DDR3-1333) Registered CAS-9 Memory Kit	593907-B21
	HP 4GB (1x4GB) Single Rank x4 PC3L-10600 (DDR3-1333) Registered CAS-9 Low Power Memory Kit	604500-B21
	HP 8GB (1x8GB) Dual Rank x4 PC3-10600 (DDR3-1333) Registered CAS-9 Memory Kit	593913-B21
	HP 8GB (1x8GB) Dual Rank x4 PC3L-10600 (DDR3-1333) Registered CAS-9 Low Power Memory Kit	604502-B21

HP 16GB (1x16GB) Quad Rank x4 PC3-8500 (DDR3-1066) Registered CAS-7 Memory Kit	593915-B21
HP 16GB (1x16GB) Dual Rank x4 PC3L-10600 (DDR3-1333) Registered CAS-9 LP Memory Kit	627808-B21
Unbuffered with ECC DIMMs (UDIMMs)	
HP 2GB (1x2GB) Dual Rank x8 PC3-10600 (DDR3-1333) Unbuffered CAS-9 Memory Kit	593921-B21
HP 4GB (1x4GB) Dual Rank x8 PC3-10600 (DDR3-1333) Unbuffered CAS-9 Memory Kit	593923-B21

NOTE: All DDR3 memory option kits consist of one DIMM per kit. For detailed memory configuration rules and guidelines, please use the Online DDR3 Memory Configuration Tool: www.hp.com/go/ddr3memory-configurator.

NOTE: Kits described as LP include Low Power DIMMs. For more information on ProLiant Energy Efficient Features, see: http://www.hp.com/go/proliant-energy-efficient

NOTE: There is a maximum support limitation of 8 ranks per memory channel (maximum of 1 quad rank DIMM and 2 dual rank DIMMs per channel)

NOTE: PC3L is a low voltage memory.



1-4 Non-hot plug LFF SATA or SAS hard drive bays - Using quick release carrier

1-8 Non-hot plug SFF SATA or SAS hard drive bays - Using quick release carrier

Drive Support

Hard Drives

NOTE: The components of a storage subsystem (e.g. the drive, the HBA/controller, firmware, and the server backplane) should operate at the same data transfer rate or the system bandwidth will be negotiated down to an acceptable level for all components.

NOTE: Hard drives have either a one year or three year warranty.

SAS Hot Plug LFF (3.5-inch) Enterprise (ENT) Drives - with quick-release (QR) carrier

	Quantity Supported	Position Supported	Controller
600GB 6G SAS 10K 300GB 6G SAS 10K	Up to 4	1-4	HP Smart Array P212/Zero Memory Controller HP Smart Array P212/256 MB Controller HP Smart Array P410/256MB Controller HP Smart Array P410/512MB with BBWC NOTE: HP s6500 SAS Enablement Kit is required when adding SAS hard drives using a P410 Smart Array controller. P212 requires the HP SAS/PWR Cable P212 Half Width Kit.

SAS Hot Plug SFF (2.5-inch) Enterprise (ENT) Drives - with quick-release (QR) carrier

	Quantity Supported	Position Supported	Controller
300GB 6G SAS 10K	Up to 8	1-8	HP Smart Array P212/Zero Memory Controller HP Smart Array P212/256 MB Controller HP Smart Array P410/256MB Controller HP Smart Array P410/512MB with BBWC

NOTE: HP s6500 SAS Enablement Kit and HP s6500 SFF Enablement Kit are required when adding SFF SAS hard drives using a P410 Smart Array controller. P212 requires the HP SAS/PWR Cable P212 Half Width Kit and HP s6500 SFF Enablement Kit.

SAS Hot Plug LFF (3.5-inch) Midline (MDL) Drives - with quick-release (QR) carrier

	Quantity Supported	Position Supported	Controller
2TB 6G SAS 7.2K	Up to 4	1-4	HP Smart Array P212/Zero Memory Controller HP Smart Array P212/256 MB Controller HP Smart Array P410/256MB Controller HP Smart Array P410/512MB with BBWC NOTE: HP s6500 SAS Enablement Kit is required when adding SAS hard drives using a P410 Smart Array controller. P212 requires the HP SAS/PWR Cable P212 Half Width Kit.

SATA Non-Hot Plug LFF (3.5-inch) Midline (MDL) Drives - with quick-release (QR) carrier

	Quantity Supported	Position Supported	Controller
3TB 3G SATA 7.2K 2TB 3G SATA 7.2K 500GB 3G SATA 7.2K	Up to 4	1-4	HP Embedded Smart Array B110i SATA RAID Controller (RAID 0, 1, 10) NOTE: The 3TB HDD is not supported with the B110i. HP Smart Array P212/Zero Memory Controller HP Smart Array P212/256 MB Controller HP Smart Array P410/256MB Controller HP Smart Array P410/512MB with BBWC NOTE: HP s6500 SAS Enablement Kit is required when adding 3TB SATA hard drives using a P410 Smart Array controller. P212 requires the HP SAS/PWR Cable P212 Half Width Kit.

SATA Non-Hot Plug SFF (2.5-inch) Midline (MDL) Drives - with quick-release (QR) carrier

	Quantity Supported	Position Supported	Controller
1TB 3G SATA 7.2K 500GB 3G SATA 7.2K 250GB 3G SATA 7.2K	Up to 8	1-8	HP Embedded SATA Controller HP Smart Array P410/256MB Controller HP Smart Array P410/512MB with BBWC NOTE: For supporting greater than 4 and up to 6 SFF SATA HDDs, a HP SL335s 5&6 SFF HDD Enablement Kit is required. For supporting more than 6 (up to 8) SFF SATA HDDs, , a P410 Smart Array controller and SAS Enablement Kit are required. Additionally, the HP s6500 SFF Enablement Kit is required when adding SFF SATA hard drives.

Power Specifications

HP 750W Common Slot Gold Hot Plug Power Supply Kit							
Part Number	512327-B21						
Input Voltage Range (V rms)	100 to 240						
Frequency Range (Nominal) (Hz)	50/60						
Nominal Input Voltage (Vrms)	100	120	200	208	220	230	240
Maximum Rated Output Wattage Rating	750	750	750	750	750	750	750
Nominal Input Current (A rms)	8.9	7.4	4.3	4.1	3.9	3.7	3.6
Maximum Rated Input Wattage Rating (Watts)	857	847	824	825	820	820	820
Maximum Rated VA (Volt-Amp)	894	884	859	859	854	854	854
Efficiency (%)	87.5	88.5	91	91	91.5	91.5	91.5
Power Factor	0.97						
Leakage Current (mA)	0.42	0.50	0.83	0.87	0.92	0.96	1.00
Maximum Inrush Current (A peak)	30						
Maximum Inrush Current duration (mS)	20						
Maximum British Thermal Unit Rating (BTU-Hr)	2925	2892	2812	2812	2797	2797	2797

HP 750W Common Slot Platinum Hot Plug Power Supply Kit							
Part Number	593831-B21						
Input Voltage Range (V rms)	100 to 240						
Frequency Range (Nominal) (Hz)	50/60						
Nominal Input Voltage (Vrms)	100	120	200	208	220	230	240
Maximum Rated Output Wattage Rating	750	750	750	750	750	750	750
Nominal Input Current (A rms)	8.6	7.1	4.2	4.0	3.8	3.6	3.4
Maximum Rated Input Wattage Rating (Watts)	841	828	809	808	807	806	805
Maximum Rated VA (Volt-Amp)	863	850	830	829	828	827	826
Efficiency (%)	89.2	90.6	92.7	92.8	93	93.1	93.2
Power Factor	0.985						
Leakage Current (mA)	0.42	0.50	0.83	0.87	0.92	0.96	1.00
Maximum Inrush Current (A peak)	30						
Maximum Inrush Current duration (mS)	20						
Maximum British Thermal Unit Rating (BTU-Hr)	2868	2825	2761	2757	2753	2749	2747

Power Specifications

HP 1200W Common Slot Silver Hot Plug Power Supply Kit							
Part Number	500172-B21						
Input Voltage Range (V rms)	100 to 240						
Frequency Range (Nominal) (Hz)	50/60						
Nominal Input Voltage (Vrms)	100	120	200	208	220	230	240
Maximum Rated Output Wattage Rating	800	900	1200	1200	1200	1200	1200
Nominal Input Current (A rms)	9.7	9.0	7.0	6.8	6.4	9.1	5.9
Maximum Rated Input Wattage Rating (Watts)	930	1034	1348	1348	1348	1348	1348
Maximum Rated VA (Volt-Amp)	970	1079	1406	1406	1406	1406	1406
Efficiency (%)	86	87	89	89	89	89	89
Power Factor	0.97						
Leakage Current (mA)	0.42	0.50	0.83	0.87	0.92	0.96	1.00
Maximum Inrush Current (A peak)	30						
Maximum Inrush Current duration (mS)	20						
Maximum British Thermal Unit Rating (BTU-Hr)	3174	3530	4600	4600	4600	4600	4600

HP 1200W Common Slot Platinum Hot Plug Power Supply Kit							
Part Number	578322-B21						
Input Voltage Range (V rms)	100 to 240						
Frequency Range (Nominal) (Hz)	50/60						
Nominal Input Voltage (Vrms)	100	120	200	208	220	230	240
Maximum Rated Output Wattage Rating	800	900	1200	1200	1200	1200	1200
Nominal Input Current (A rms)	9.3	8.6	6.7	6.5	6.1	5.8	5.6
Maximum Rated Input Wattage Rating (Watts)	889	989	1290	1290	1290	1290	1290
Maximum Rated VA (Volt-Amp)	927	1031	1345	1345	1345	1345	1345
Efficiency (%)	90	91	93	93	93	93	93
Power Factor	0.97						
Leakage Current (mA)	0.42	0.50	0.83	0.87	0.92	0.96	1.00
Maximum Inrush Current (A peak)	30						
Maximum Inrush Current duration (mS)	10						
Maximum British Thermal Unit Rating (BTU-Hr)	3033	3375	4403	4403	4403	4403	4403

To review typical system power ratings use the Active Answers HP Power Advisor which is available via the online tool located at URL: www.hp.com/go/proliant-energy-efficient or www.hp.com/go/hppoweradvisor

System Unit	**Dimensions** (H x W x D) (with bezel)	6.96 x 17.638 x 35.236in (17.68 x 44.8 x 89.55cm)	
	Weight (approximate)	Maximum (all hard drives, power supplies, and processors installed)	220lb (99.8kg)
	Input Requirements (per power supply)	Rated Line Voltage	90 to 140 VAC 180 to 264 VAC
		Rated Input Current	7.31A at 115VAC 3.6A at 230VAC
		Rated Input Frequency	47 to 63 Hz
		Rated Input Power	855W (at 100 VAC), 840.72W (at 200 VAC)
	Power Specifications	To review typical system power ratings use the HP Power Advisor which is available via the online tool located at URL: www.hp.com/go/proliant-energy-efficient	
	Power Supply Output (per power supply)	Rated Steady-State Power	653.10W (at 100 VAC), 653.08W (at 200 VAC)
	System Inlet Temperature	Operating	50° to 95° F (10° to 35° C) at sea level with an altitude derating of 1.8°F per every 1000 ft (1.0°C per every 305 m) above sea level to a maximum of 10,000 ft (3050 m), no direct sustained sunlight. Maximum rate of change is 18°F/hr (10°C/hr). The upper limit may be limited by the type and number of options installed. System performance may be reduced if operating with a fan fault or above 86°F (30°C).
		Non-operating	-22° to 140° F (-30° to 60° C) Maximum rate of change is 36°F/hr (20°C/hr).
	Relative Humidity (non-condensing)	Operating	10% to 90% relative humidity (Rh), 82.4°F (28°C) maximum wet bulb temperature, non-condensing.
		Non-operating	5% to 95% relative humidity (Rh), 101.7°F (38.7°C) maximum wet bulb temperature, non-condensing.
	Altitude	Operating	10,000 ft (3050 m). This value may be limited by the type and number of options installed. Maximum allowable altitude change rate is 1500 ft/min (457 m/min).
		Non-operating	30,000 ft (9144 m). Maximum allowable altitude change rate is 1500 ft/min (457 m/min).
	Acoustic Noise	Listed are the declared A-Weighted sound power levels (LWAd) and declared average bystander position A-Weighted sound pressure levels (LpAm) when the product is operating in a 23°C ambient environment. Noise emissions were measured in accordance with ISO 7779 (ECMA 74) and declared in accordance with ISO 9296 (ECMA 109).	

		Idle	
		L_{WAd}	6.4
		L_{pAm}	45dBA
		Operating	
		L_{WAd}	6.7
		L_{pAm}	51dBA
	Emissions Classification (EMC)	FCC Rating	Class A
		Normative Standards	CISPR 22; EN55022; EN55024; FCC CFR 47, Pt 15; ICES-003; CNS13438; GB9254; K22;K24; EN 61000-3-2; EN 61000-3-3; EN 60950-1; IEC 60950-1
		NOTE: Product conformance to cited product specifications is based on sample (type) testing, evaluation, or assessment. This product or family of products is eligible to bear the appropriate compliance logos and statements.	
Embedded NC362i PCIe Gigabit Server Adapter	Network Interface	Integrated 10/100/1000BASE-T Transceiver Combines a triple-speed IEEE 802.3TM - Compliant Media Access Controller (MAC) with a triple-speed Ethernet transceiver.	
	Data Transfer Method	Compliant to x4 PCIe Specification	
	Controller	Intel® 82576	
	Network Transfer Rate	10Base-T (Half-Duplex)	10 Mb/s
		10Base-T (Full-Duplex)	20 Mb/s
		100Base-TX (Half-Duplex)	100 Mb/s
		100Base-TX (Full-Duplex)	200 Mb/s
		1000Base-TX (Half and Full-Duplex)	2000Mb/s
	Connector	RJ-45 connector	
	Cable Support	Performs all the physical layer functions for 10BASE-T, 100BASE-T, and 1000BASE-T Ethemet on standard Category 5 UTP	
Environment-friendly Products and Approach	End-of-life Management and Recycling	Hewlett-Packard offers end-of-life HP product return, trade-in, and recycling programs in many geographic areas. For trade-in information, please go to: http://www.hp.com/go/green. To recycle your product, please go to: http://www.hp.com/go/green or contact your nearest HP sales office. Products returned to HP will be recycled, recovered or disposed of in a responsible manner. The EU WEEE directive (2002/95/EC) requires manufacturers to provide treatment information for each product type for use by treatment facilities. This information (product disassembly instructions) is posted on the Hewlett Packard web site at: http://www.hp.com/go/green. These instructions may be used by recyclers and other WEEE treatment facilities as well as HP OEM customers who integrate and re-sell HP equipment.	

© Copyright 2012 Hewlett-Packard Development Company, L.P.

The information contained herein is subject to change without notice.

Microsoft and Windows are US registered trademarks of Microsoft Corporation. Intel, the Intel logo, Xeon and Xeon Inside are trademarks of Intel Corporation in the U.S. and other countries.

The only warranties for HP products and services are set forth in the express warranty statements accompanying such products and services. Nothing herein should be construed as constituting an additional warranty. HP shall not be liable for technical or editorial errors or omissions contained herein.

For hard drives, 1GB = 1 billion bytes. Actual formatted capacity is less.