HP ProLiant SL6000/SL6500 Scalable System Cabling Guide

Abstract

This document is for the person who installs, administers, and troubleshoots servers and storage systems. HP assumes you are qualified in the servicing of computer equipment and trained in recognizing hazards in products with hazardous energy levels.



Part Number: 571451-004
June 2014
Edition: 4

© Copyright 2009, 2014 Hewlett-Packard Development Company, L.P.

The information contained herein is subject to change without notice. The only warranties for HP products and services are set forth in the express warranty statements accompanying such products and services. Nothing herein should be construed as constituting an additional warranty. HP shall not be liable for technical or editorial errors or omissions contained herein.

Microsoft® is a U.S. registered trademark of Microsoft Corporation.

Contents

Hardware installation 4
Scalable system hardware 4
Rack types and configurations 4
Rack compatibility 5
Bulk rail rack-mounting hardware 5
Cable management for third-party racks 5
Optional installation services 6
Optimum environment 7
Space and airflow requirements 7
Temperature requirements 7
Power requirements 8
Electrical grounding requirements 8
Installation guidelines 9
Cabling guidelines 9
Installation overview for full-rack solutions 10
Power cabling 11
Power requirements and considerations 11
PDU support 11
Extension bar support 11
Power cabling configurations 12
mPDU and fixed-cord extension bar configuration 13
Power cabling with extension bars 14
Power cabling with Y-cables 15
Bottom-mounted mPDU and fixed-cord extension bar configuration 16
Power cabling with Y-cables and bottom-mounted PDU 17
Network cabling 19
Network adapter and switch support 19
Network cabling configurations 19
Network cabling with Ethernet switches 19
Network cabling with InfiniBand switches 20
Electrostatic discharge 22
Preventing electrostatic discharge 22
Grounding methods to prevent electrostatic discharge 22
Support and other resources 23
Before you contact HP 23
HP contact information 23
Acronyms and abbreviations 24
Documentation feedback 26
Index 27

Hardware installation

Scalable system hardware

The HP ProLiant SL6000/SL6500 Scalable System is a modular server hardware system that is optimized for HP Rack 10000 Series and HP Intelligent Rack Series models that are at least 47.24 in (1200 mm) deep. These are universal industry standard RETMA 19-inch racks with proven air flow, proven cable management and high dynamic and static load capacity.

For more information about product features, specifications, options, configurations, and compatibility, see the product QuickSpecs on the HP website (http://www.hp.com/go/qs).

This guide provides best practices and overview procedures for installing the hardware in a rack and for connecting the different types of cabling for the scalable system.

The system is comprised of servers, of which several models are available, to match computing and storage needs. For more information about supported scalable system servers, see the HP website (http://www.hp.com/servers/proliant).

Other components required to support the system include the following:

- A rack
- PDUs
- Power distribution cables or extension bars
- Network switches (recommended)

This guide refers to the installation of various components. Before following the procedures in this guide, read and understand the various hardware installation documents for all associated scalable system components and options. Observe all safety information in those documents as well as the guidelines in this document.

Rack types and configurations

The HP ProLiant SL6000/SL6500 Scalable System can be deployed in HP Rack 10000 Series, HP Intelligent Rack Series, Telco racks, and industry standard square- or round-hole racks.

Observe the following considerations for each rack type:

- HP Rack 10000 Series, HP Intelligent Rack Series—The scalable system is optimized for this rack series. When installed, servers are recessed, enabling use of the front rack door and providing room for front cable routing in the vertical columns of the rack.
- Third-party square- and round-hole racks—The scalable system operates in industry standard racks but requires removal of the front rack door. Also, the increased depth requirement of SL6500 chassis components means a rack extender might be necessary for this rack type.
- Telco rack—The scalable system mounts in a Telco rack. Cable routing and management is more challenging for the user.

Rack compatibility

In general, the SL6500 Scalable System requires a deeper rack than the SL6000 Scalable System. In some cases, a rack extender can provide the necessary depth.

Server chassis	HP 10000 Rack Series	HP Intelligent Rack Series	Third-party rack	Telco rack
SL6000	47.24 in (1200 mm)	47.24 in (1200 mm)	Minimum 1000 mm deep, RETMA 19-inch rails and sufficient load capacity	Minimum 1000 mm deep, RETMA 19-inch rails and sufficient load capacity
SL6500	47.24 in (1200 mm), extender required	47.24 in (1200 mm)	Minimum 1200 mm deep, RETMA 19-inch rails and sufficient load capacity	Minimum 1200 mm deep, RETMA 19-inch rails and sufficient load capacity

For more information about product features, specifications, options, configurations, and compatibility, see the product QuickSpecs on the HP website (http://www.hp.com/go/qs).

Bulk rail rack-mounting hardware

The SL6000 can use the bulk rail rack-mounting hardware, which supports up to five 2U servers.

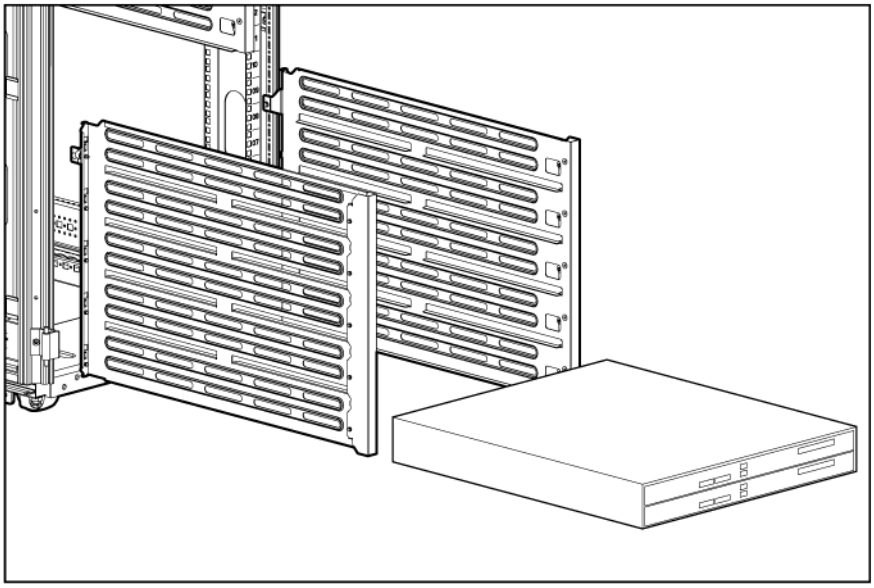

Cable management for third-party racks

For configurations with a third-party rack, HP recommends:

- Using the HP s6500 4U Third Party Rail Kit (PN 601946-B21) to manage the front chassis cabling (this might require the removal of the rack front door).

- Using the cable management bracket that ships with the 2U and 4U rack-mounting hardware kit. The following figure shows the cable management solution installed on a third-party rack.

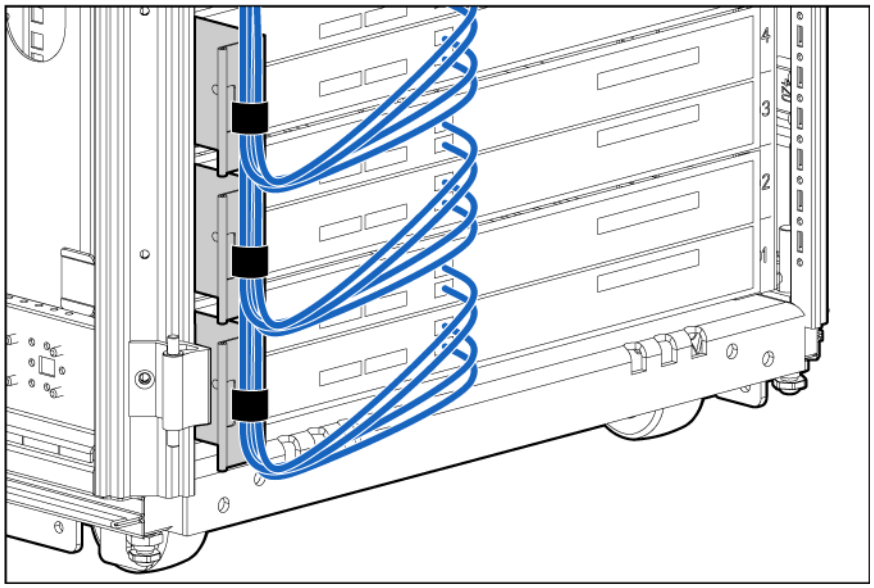

Optional installation services

Delivered by experienced, certified engineers, HP Care Pack services help you keep your servers up and running with support packages tailored specifically for HP ProLiant systems. HP Care Packs let you integrate both hardware and software support into a single package. A number of service level options are available to meet your needs.

HP Care Pack Services offer upgraded service levels to expand your standard product warranty with easy-to-buy, easy-to-use support packages that help you make the most of your server investments. Some of the Care Pack services are:

- Hardware support
  - 6-Hour Call-to-Repair
  - 4-Hour 24x7 Same Day
  - 4-Hour Same Business Day
- Software support
  - Microsoft®
  - Linux
  - HP ProLiant Essentials (HP SIM and RDP)
  - VMware
- Integrated hardware and software support
  - Critical Service
  - Proactive 24
  - Support Plus
  - Support Plus 24
- Startup and implementation services for both hardware and software

For more information on HP Care Pack Services, see the HP website (http://www.hp.com/services/carepack).

Optimum environment

When installing the server in a rack, select a location that meets the environmental standards described in this section.

Space and airflow requirements

To allow for servicing and adequate airflow, observe the following space and airflow requirements when deciding where to install a rack:

- Leave a minimum clearance of 63.5 cm (25.0 in) in front of the rack.
- Leave a minimum clearance of 76.2 cm (30.0 in) behind the rack.
- Leave a minimum clearance of 121.9 cm (48.0 in) from the back of the rack to the back of another rack or row of racks.

The HP server draws in cool air through the front door, and then expels warm air through the rear door. Therefore, the front and rear rack doors must be ventilated adequately to enable ambient room air to enter the cabinet, and the rear door must be ventilated adequately to enable the warm air to escape from the cabinet.

△ **CAUTION:** To prevent improper cooling and damage to the equipment, do not block the ventilation openings.

When a vertical space in the rack is not populated by a server or rack component, the gaps between the components cause changes in airflow through the rack and across the servers. Cover all gaps with blanking panels to maintain proper airflow.

△ **CAUTION:** Always use blanking panels to fill empty vertical spaces in the rack. This arrangement ensures proper airflow. Using a rack without blanking panels results in improper cooling that can lead to thermal damage.

The HP Rack 10000 series rack provides proper server cooling from flow-through perforations in the front and rear doors that provide a 64-percent open area for ventilation.

△ **CAUTION:** HP has not tested or validated the server with third-party racks. If a third-party rack is used, observe the following additional requirements to ensure adequate airflow and to prevent damage to the equipment:

- Front and rear doors—If the 42U rack includes closing front and rear doors, you must allow at least 5,350 sq cm (830 sq in) of holes evenly distributed from top to bottom to permit adequate airflow (equivalent to the required 64-percent open area for ventilation).
- Side—The clearance between the installed rack component and the side panels of the rack must be a minimum of 7 cm (2.75 in).

Temperature requirements

To ensure continued safe and reliable equipment operation, install or position the system in a well-ventilated, climate-controlled environment.

The maximum recommended ambient operating temperature (TMRA) for most server products is 35°C (95°F). The temperature in the room where the rack is located must not exceed 35°C (95°F).

> **CAUTION:** To reduce the risk of damage to the equipment when installing third-party options:
> - Do not permit optional equipment to impede airflow around the server or to increase the internal rack temperature beyond the maximum allowable limits.
> - Do not exceed the manufacturer's TMRA.

Power requirements

Installation of this equipment must comply with local and regional electrical regulations governing the installation of information technology equipment by licensed electricians. This equipment is designed to operate in installations covered by NFPA 70, 1999 Edition (National Electric Code) and NFPA-75, 1992 (code for Protection of Electronic Computer/Data Processing Equipment). For electrical power ratings on options, refer to the product rating label or the user documentation supplied with that option.

> **WARNING:** To reduce the risk of personal injury, fire, or damage to the equipment, do not overload the AC supply branch circuit that provides power to the rack. Consult the electrical authority having jurisdiction over wiring and installation requirements of your facility.

> **CAUTION:** Protect the server from power fluctuations and temporary interruptions with a regulating uninterruptible power supply. This device protects the hardware from damage caused by power surges and voltage spikes and keeps the system in operation during a power failure.

When installing more than one server, you may need to use additional power distribution devices to safely provide power to all devices. Observe the following guidelines:

- Balance the server power load between available AC supply branch circuits.
- Do not allow the overall system AC current load to exceed 80% of the branch circuit AC current rating.
- Do not use common power outlet strips for this equipment.
- Provide a separate electrical circuit for the server.

Electrical grounding requirements

The server must be grounded properly for proper operation and safety. In the United States, you must install the equipment in accordance with NFPA 70, 1999 Edition (National Electric Code), Article 250, as well as any local and regional building codes. In Canada, you must install the equipment in accordance with Canadian Standards Association, CSA C22.1, Canadian Electrical Code. In all other countries, you must install the equipment in accordance with any regional or national electrical wiring codes, such as the International Electrotechnical Commission (IEC) Code 364, parts 1 through 7. Furthermore, you must be sure that all power distribution devices used in the installation, such as branch wiring and receptacles, are listed or certified grounding-type devices.

Because of the high ground-leakage currents associated with multiple servers connected to the same power source, HP recommends the use of a PDU that is either permanently wired to the building's branch circuit or includes a nondetachable cord that is wired to an industrial-style plug. NEMA locking-style plugs or those complying with IEC 60309 are considered suitable for this purpose. Using common power outlet strips for the server is not recommended.

Installation guidelines

Always install the scalable system in consecutive U spaces in the rack to optimize cooling, cabling, and management functions.

Before installing scalable system components and options, observe all safety information and guidelines in product-specific documentation. Also observe the following guidelines.

WARNING: To reduce the risk of personal injury or damage to the equipment, be sure that:

- The leveling feet are extended to the floor.
- The full weight of the rack rests on the leveling feet.
- The stabilizing feet are attached to the rack if it is a single-rack installation.
- The racks are coupled together in multiple-rack installations.
- Only one component is extended at a time. A rack may become unstable if more than one component is extended for any reason.

WARNING: When installing a server in a telco rack, be sure that the rack frame is adequately secured to the top and bottom of the building structure.

WARNING: A risk of personal injury from electric shock and hazardous energy levels exists. The installation of options and routine maintenance and service of this product must be performed by individuals who are knowledgeable about the procedures, precautions, and hazards associated with AC power products.

WARNING: A risk of personal injury from electric shock and hazardous energy levels exists. The installation of options and routine maintenance and service of this product must be performed by individuals who are knowledgeable about the procedures, precautions, and hazards associated with DC power products.

CAUTION: Electrostatic discharge (ESD) can damage electronic components. Be sure that you are properly grounded (earthed) before beginning any installation procedure.

CAUTION: Always plan the rack installation so that the heaviest item is on the bottom of the rack. Install the heaviest item first, and continue to populate the rack from the bottom to the top.

Cabling guidelines

Before connecting scalable system cabling, observe all safety information and guidelines in product-specific documentation. Also observe the following guidelines.

CAUTION: When connecting devices, distribute the loads evenly to remain within the capability of the extension bars.

CAUTION: When routing cables, always be sure that the cables are not in a position where they can be pinched or air flow can be blocked.

IMPORTANT: Connect power cords by starting at the bottom inside power outlet, working up to the top outside power outlet.

Installation overview for full-rack solutions

For ease of cabling, HP recommends a specific order for hardware installation and cable connections. You can use portions of the procedure, depending on the hardware in your configuration.

The number of power components is based on the number of servers and the power supply configuration. For more information, see "Power requirements and considerations (on page 11)."

For hardware-specific installation procedures, see the documentation that ships with each component.

To install hardware and connect cabling:

1. Install PDUs.
2. Install extension bars or power distribution cables.

   For an example, see "mPDU and fixed-cord extension bar configuration (on page 13)."
3. Install two 1U network switches in the middle of the rack (21U and 22U):
   - For Ethernet switches, install the switch with connectors at the front of the rack.
   - For InfiniBand switches, install the switch with connectors at the rear of the rack.
4. Install the servers.
5. Connect power cabling:
   a. Connect power distribution cables and devices to the PDUs.
   b. Connect power distribution cables and devices to the server power supplies.

   For examples, see the following:
   - "Power cabling with extension bars (on page 14)"
   - "Power cabling with Y-cables (on page 15)"
6. Connect network cabling:
   a. Connect network cables to the servers.
   b. Connect network cables to the switches.
   c. Connect the switches to the external network.

   For examples, see the following:
   - "Network cabling with Ethernet switches (on page 19)"
   - "Network cabling with InfiniBand switches (on page 20)"
7. Connect facility power to the PDUs.
8. Apply facility power to the PDUs.
9. Power up the switches.
10. Power up the servers.

Power cabling

Power requirements and considerations

When calculating power for the scalable system, be sure to include power for network switches, UPS devices, and other options.

To supply adequate power to the scalable system, observe the power input requirements for each type of server power supply, and then provide the sufficient number of PDUs and distribution cables or devices.

Specification	460 W power supply	750 W power supply	1200 W power supply
Rated input voltage	100 to 120 VAC 200 to 240 VAC	100 to 120 VAC 200 to 240 VAC	100 to 120 VAC 200 to 240 VAC
Rated input frequency	50 Hz to 60 Hz	50 Hz to 60 Hz	50 Hz to 60 Hz
Rated input current	5.5 A at 100 VAC 2.6 A at 200 VAC	8.9 A at 100 VAC 4.3 A at 200 VAC	10 A at 100 VAC 4.9 A at 200 VAC
Rated input power (AC input)	526 W at 100 V 505 W at 200 V	857 W at 100 V 824 W at 200 V	930 W at 100 V 1348 W at 200 V
BTUs per hour (AC input)	1773 at 120 V 1725 at 200 V to 240 V	2892 at 120 V 2812 at 200 V to 240 V	3530 at 120 V 4600 at 200 V to 240 V

PDU support

The HP ProLiant SL6000/SL6500 Scalable System uses PDUs to provide power to the servers. Many PDU configurations are possible. For rack-mounting instructions and locations, see the documentation provided with the PDU.

HP recommends using fixed-cord mPDUs to supply power to components in the rack.

Depending on the server power supply configuration, each mPDU (at high line voltage) can support the following:

- Up to 10 servers (with two power supplies each)
- Up to 20 servers (with one power supply each)

For a list of supported mPDUs, see the product QuickSpecs on the HP website (http://www.hp.com/go/qs).

To obtain supported mPDUs, contact an authorized reseller or see the HP website (http://www.hp.com/go/rackandpower).

Extension bar support

To distribute power from the PDUs, use the appropriate type of cables and power connector to connect to the server power supplies.

For servers with 460-W or 750-W power supplies, HP recommends using fixed-cord extension bars with mPDUs.

An HP fixed-cord extension bar has four cords with power connectors. Depending on the server power supply configuration, each extension bar can support the following:

- Up to two servers (with two power supplies)
- Up to four servers (with one power supply)

For a fully-configured 42U rack with two switches and 20 servers with two power supplies, 11 extension bars are required.

For a list of supported extension bars, see the product QuickSpecs on the HP website (http://www.hp.com/go/qs).

To obtain supported extension bars, contact an authorized reseller or see the HP website (http://www.hp.com/go/rackandpower).

Power cabling configurations

Many power cabling configurations are possible, including the following examples.

In some installations, multiple racks are installed in close proximity to each other. Mounting the PDUs in a 0-U configuration is impractical. In these instances, the following examples apply:

- Bottom-mounted mPDU and fixed-cord extension bar configuration (on page 16)
- Power cabling with Y-cables and bottom-mounted PDU (on page 17)

For single racks (including separated racks), possible power cabling configurations include the following:

- mPDU and fixed-cord extension bar configuration (on page 13)
- Power cabling with extension bars (on page 14)
- Power cabling with Y-cables (on page 15)

mPDU and fixed-cord extension bar configuration

The following figure shows a 42U rack with two mPDUs installed in a zero-U configuration. Five fixed-cord extension bars are connected to each mPDU.

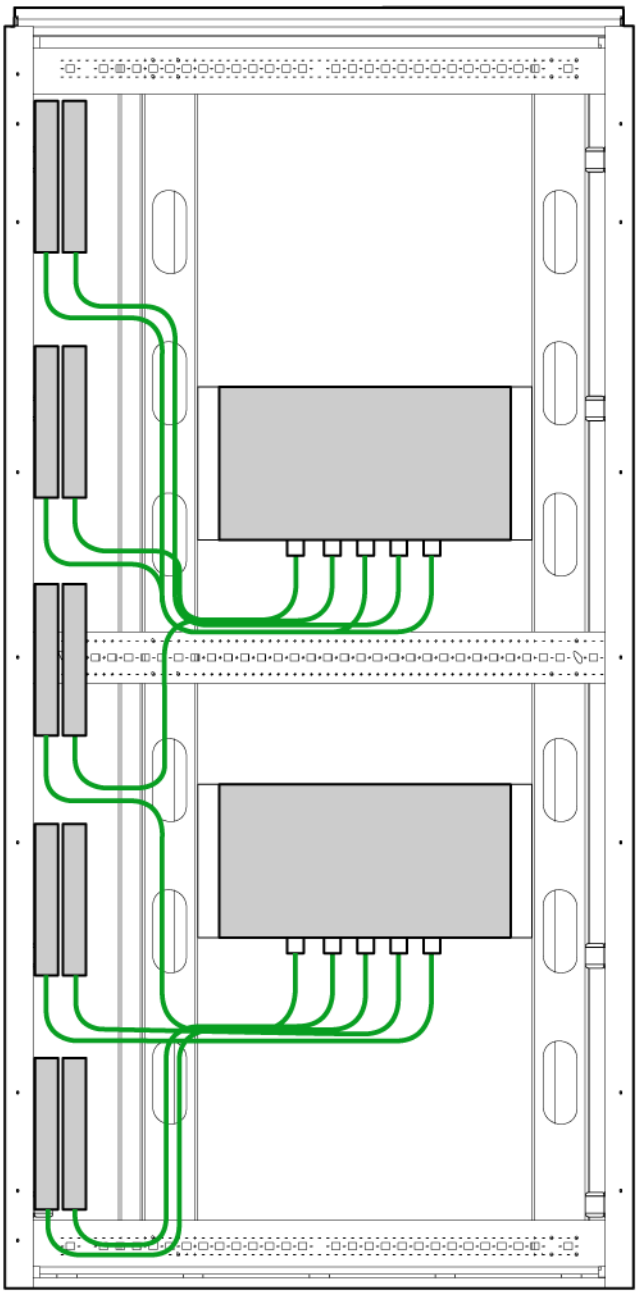

Item	Description
1	Facility power cabling
2	Fixed-cord extension bar
3	Fixed-cord mPDU

Power cabling with extension bars

Fixed-cord extension bars enable you to reduce traditional power cabling with the following methods:

- Eliminating standard-length power cords for each server power supply
- Aggregating server cabling into fewer PDU connections

The following figure shows the back of a fully-configured 42U rack with different types of scalable system servers. The top half of the rack is configured for servers with two power supplies, while the bottom half of the rack is configured for servers with a single power supply. Newer extension bars may have seven cords per bar.

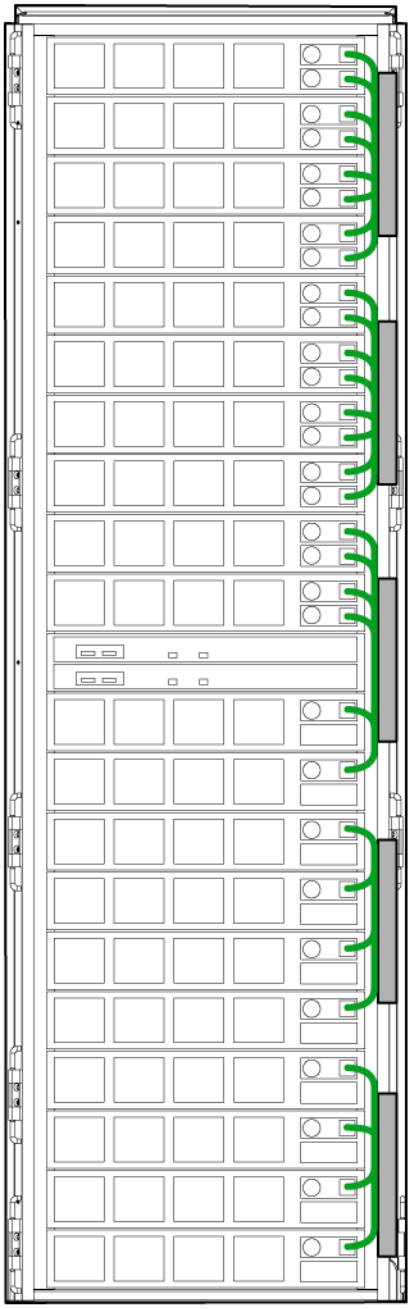

Power cabling with Y-cables

For servers with 1200-W power supplies, Y-cables are specialized power cords that connect two power supplies to a single C19 PDU outlet. Y-cables eliminate the need for extension bars (power strips) and can provide lower cost, easier installation, and less clutter in the rack.

The following figure shows the side and back of a fully-configured 42U rack with different types of scalable system servers. The top half of the rack is configured for servers with two 1200-W power supplies, while the bottom half of the rack is configured for servers with one 1200-W power supply. The PDUs shown are 3-phase PDUs.

For illustration purposes only, the right rear rack column is removed to show cable routing.

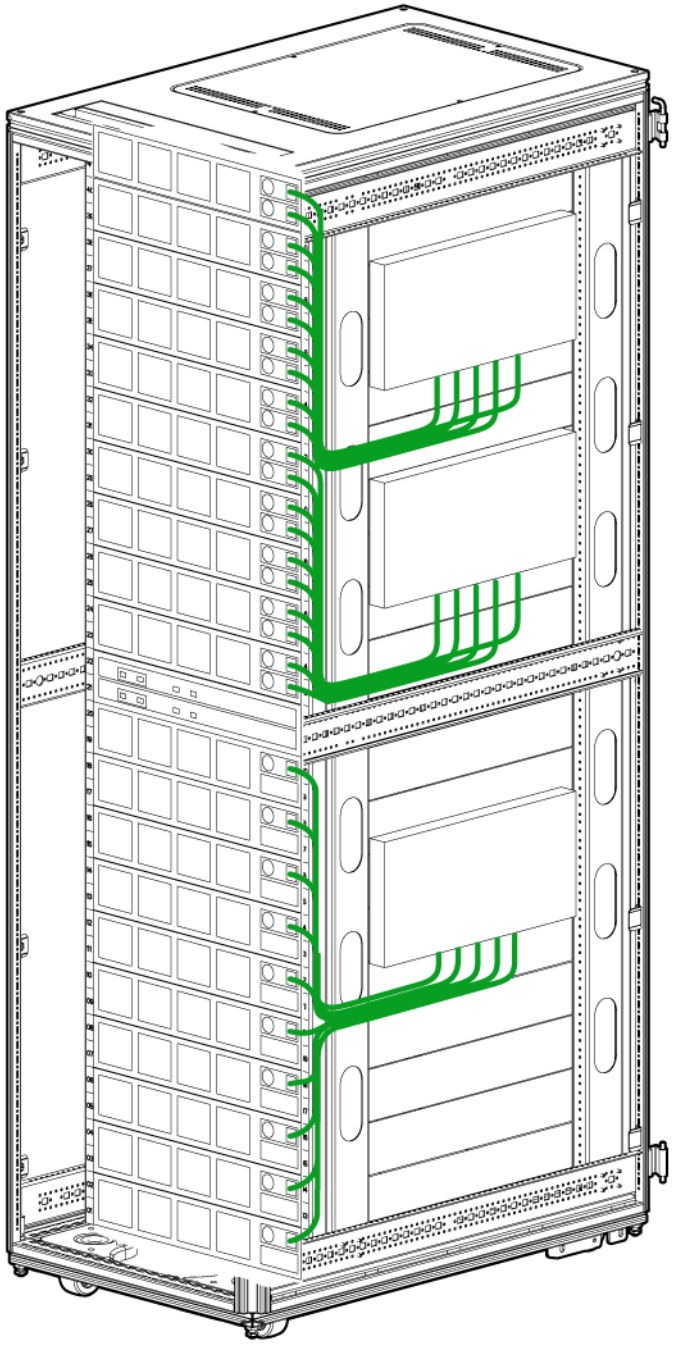

Bottom-mounted mPDU and fixed-cord extension bar configuration

The following figure shows a 42U rack with two 3-phase mPDUs installed in the bottom of the rack. Five fixed-cord extension bars are connected to each mPDU. The cables to the extension bars are routed from the back of the mPDUs.

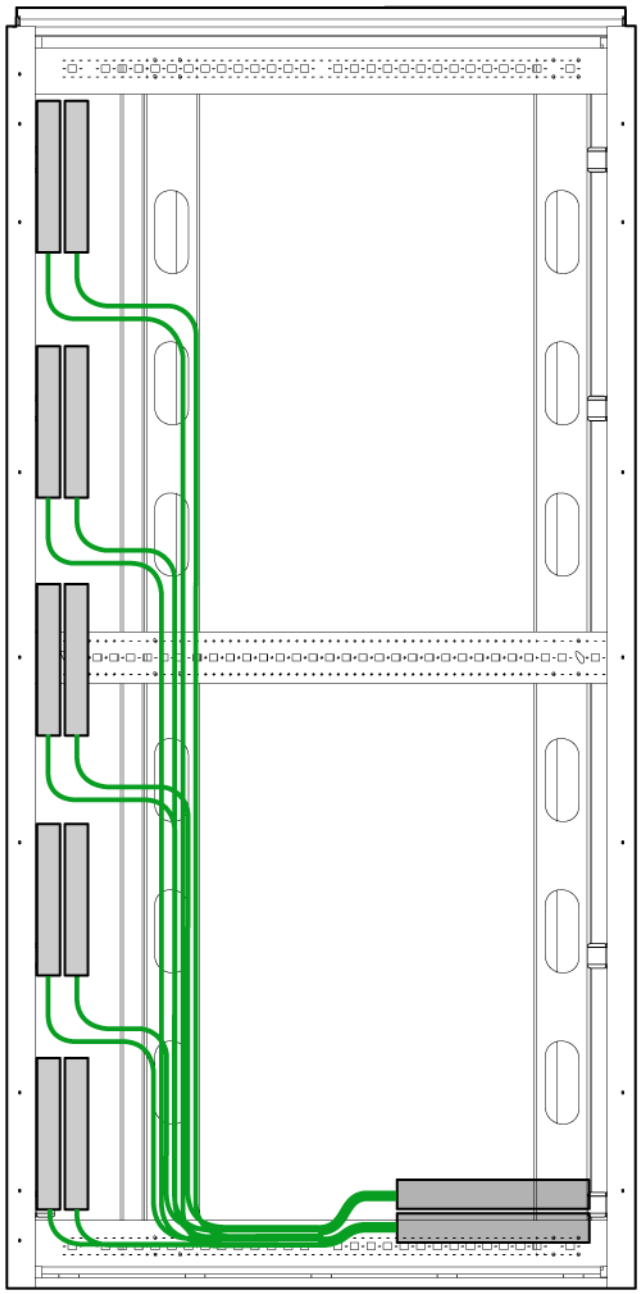

Item	Description
1	Facility power cabling
2	Fixed-cord extension bar

Item	Description
3	Fixed-cord mPDU

Power cabling with Y-cables and bottom-mounted PDU

For servers with 1200-W power supplies, Y-cables are specialized power cords that connect two power supplies to a single C19 PDU outlet. Y-cables eliminate the need for extension bars (power strips) and can provide lower cost, easier installation, and less clutter in the rack.

The following figure shows the side and back of a 42U rack with different types of scalable system servers. The top half of the rack is configured for servers with two 1200-W power supplies, while the bottom half of the rack is configured for servers with one 1200-W power supply.

For illustration purposes only, the right rear rack column is removed to show cable routing.



Network cabling

Network adapter and switch support

Each server model in the HP ProLiant SL6000/SL6500 Scalable System supports a network adapter with at least one connector. For server-specific connector locations, see the server installation sheet that ships with the server.

For a fully configured 42U rack, HP recommends installing two 1U switches at the 21U and 22U positions in the rack. Locating the switches in other positions is supported, but routing cables for those configurations can be more challenging.

For a list of supported switches, see the product QuickSpecs on the HP website (http://www.hp.com/go/qs).

To obtain supported switches, contact an HP authorized reseller or see the HP website (http://www.procurve.com).

Network cabling configurations

Many network cabling configurations are possible, including the following examples:

- Network cabling with Ethernet switches (on page 19)
- Network cabling with InfiniBand switches (on page 20)

Network cabling with Ethernet switches

By mounting Ethernet switches in the middle of the rack, you can use shorter network cables and further reduce cable bulk by dividing cable routing between the front left and right columns and between the top and bottom of the rack.

The following figure shows the front of a fully configured rack with two 1U Ethernet switches and different types of scalable system servers. Adapter cabling consists of standard network cables with RJ-45 connectors.

The servers in the bottom half of the rack have a redundant adapter cabling configuration.

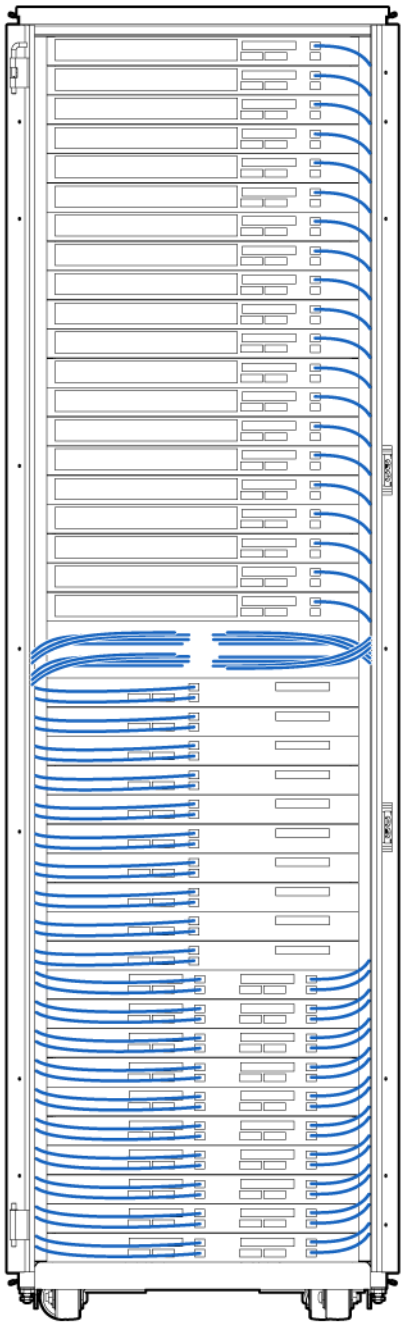

Network cabling with InfiniBand switches

By mounting InfiniBand switches with connectors at the rear of the rack, you can eliminate in-rack routing and bending of the InfiniBand cables from the external network. This configuration also keeps the InfiniBand connections isolated at the back of the rack, reducing physical interference with SFP transceivers.

The following figure shows a fully configured rack with two 1U Infiniband switches and different types of scalable system servers. Adapter cabling consists of QDR cables with QSFP connectors. Connections from the servers to the switches show cabling that routes from the front to the rear of the rack.

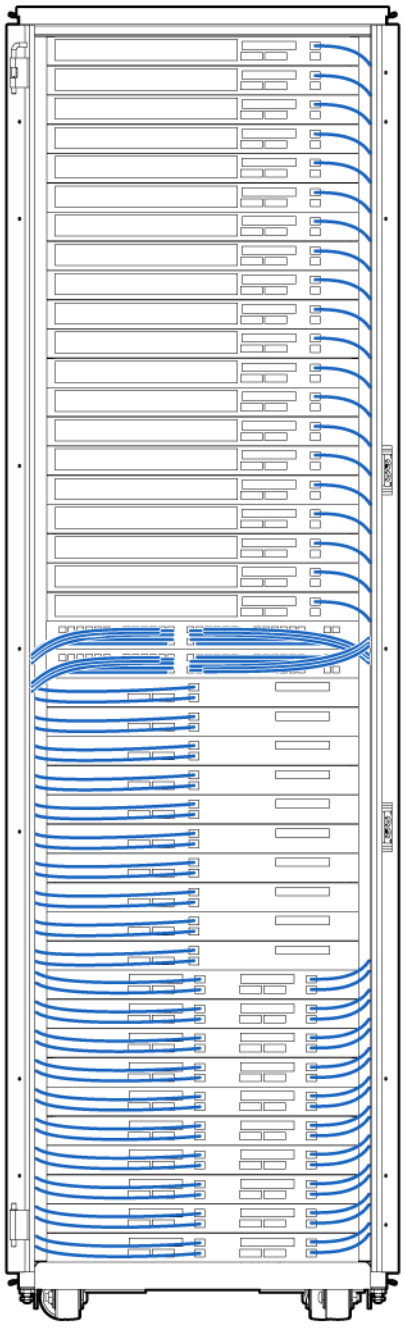

Electrostatic discharge

Preventing electrostatic discharge

To prevent damaging the system, be aware of the precautions you need to follow when setting up the system or handling parts. A discharge of static electricity from a finger or other conductor may damage system boards or other static-sensitive devices. This type of damage may reduce the life expectancy of the device.

To prevent electrostatic damage:

- Avoid hand contact by transporting and storing products in static-safe containers.
- Keep electrostatic-sensitive parts in their containers until they arrive at static-free workstations.
- Place parts on a grounded surface before removing them from their containers.
- Avoid touching pins, leads, or circuitry.
- Always be properly grounded when touching a static-sensitive component or assembly.

Grounding methods to prevent electrostatic discharge

Several methods are used for grounding. Use one or more of the following methods when handling or installing electrostatic-sensitive parts:

- Use a wrist strap connected by a ground cord to a grounded workstation or computer chassis. Wrist straps are flexible straps with a minimum of 1 megohm ±10 percent resistance in the ground cords. To provide proper ground, wear the strap snug against the skin.
- Use heel straps, toe straps, or boot straps at standing workstations. Wear the straps on both feet when standing on conductive floors or dissipating floor mats.
- Use conductive field service tools.
- Use a portable field service kit with a folding static-dissipating work mat.

If you do not have any of the suggested equipment for proper grounding, have an authorized reseller install the part.

For more information on static electricity or assistance with product installation, contact an authorized reseller.

Support and other resources

Before you contact HP

Be sure to have the following information available before you call HP:

- Active Health System log (HP ProLiant Gen8 or later products)

  Download and have available an Active Health System log for 3 days before the failure was detected. For more information, see the *HP iLO 4 User Guide* or *HP Intelligent Provisioning User Guide* on the HP website (http://www.hp.com/go/ilo/docs).

- Onboard Administrator SHOW ALL report (for HP BladeSystem products only)

  For more information on obtaining the Onboard Administrator SHOW ALL report, see the HP website (http://www.hp.com/go/OAlog).

- Technical support registration number (if applicable)
- Product serial number
- Product model name and number
- Product identification number
- Applicable error messages
- Add-on boards or hardware
- Third-party hardware or software
- Operating system type and revision level

HP contact information

For United States and worldwide contact information, see the Contact HP website (http://www.hp.com/go/assistance).

In the United States:

- To contact HP by phone, call 1-800-334-5144. For continuous quality improvement, calls may be recorded or monitored.
- If you have purchased a Care Pack (service upgrade), see the Support & Drivers website (http://www8.hp.com/us/en/support-drivers.html). If the problem cannot be resolved at the website, call 1-800-633-3600. For more information about Care Packs, see the HP website (http://pro-aq-sama.houston.hp.com/services/cache/10950-0-0-225-121.html).

Acronyms and abbreviations

CSA

Canadian Standards Association

ESD

electrostatic discharge

IEC

International Electrotechnical Commission

iLO

Integrated Lights-Out

mPDU

modular power distribution unit

PDU

power distribution unit

QDR

quad data rate

QSFP

quad small form-factor pluggable

RDP

Rapid Deployment Pack

RETMA

Radio Electronics Television Manufacturers Association (rack spacing)

SFP

small form-factor pluggable

SIM

Systems Insight Manager

TMRA

recommended ambient operating temperature

UPS

uninterruptible power system

Documentation feedback

HP is committed to providing documentation that meets your needs. To help us improve the documentation, send any errors, suggestions, or comments to Documentation Feedback (mailto:docsfeedback@hp.com). Include the document title and part number, version number, or the URL when submitting your feedback.

Index

A

airflow requirements 7
authorized reseller 23

C

cable management system 5
cables, networking 19, 20
cables, PDU 13, 16
Care Pack 6
contacting HP 23
customer self repair (CSR) 23

E

electrical grounding requirements 8
electrostatic discharge 22
environmental requirements 7
Ethernet switches 19
extension bars 13, 16, 17

G

grounding methods 22
grounding requirements 8
guidelines, cabling 9
guidelines, installation 9

H

help resources 23
HP technical support 23
HP website 23

I

InfiniBand 20
installation guidelines 9
installation overview 10
installation services 6

M

mounting rails 5

N

network cable 19, 20

O

optimum environment 7

P

PDU installation 10, 13, 16
phone numbers 23
power cables 11, 12, 13, 14, 15, 16, 17
power distribution unit (PDU) 8, 13, 16
power requirements 8

R

rack doors, removing 4
rack installation 6, 10
rack stability 9
racks 4
requirements, environmental 7
requirements, power 8
requirements, temperature 7

S

safety considerations 22
site requirements 7
space requirements 7
static electricity 22
support 23
switches 19, 20

T

technical support 23
telco racks 4, 9
telephone numbers 23
temperature requirements 7
third-party racks 4, 5

U

uninterruptible power supply (UPS) 8

V

ventilation 7

W

website, HP 23