Hewlett Packard Enterprise

HPE 16GB NVDIMM User Guide

for HPE ProLiant Gen10 servers and HPE Synergy Gen10 compute modules

Abstract

This document includes installation, maintenance, and configuration information for HPE 16GB NVDIMMs and is for the person who installs, administers, and troubleshoots servers and storage systems. Hewlett Packard Enterprise assumes you are qualified in the servicing of computer equipment and trained in recognizing hazards in products with hazardous energy levels.

Part Number: P03278-002
Published: March 2018
Edition: 2

© Copyright 2017-2018 Hewlett Packard Enterprise Development LP

Notices

The information contained herein is subject to change without notice. The only warranties for Hewlett Packard Enterprise products and services are set forth in the express warranty statements accompanying such products and services. Nothing herein should be construed as constituting an additional warranty. Hewlett Packard Enterprise shall not be liable for technical or editorial errors or omissions contained herein.

Confidential computer software. Valid license from Hewlett Packard Enterprise required for possession, use, or copying. Consistent with FAR 12.211 and 12.212, Commercial Computer Software, Computer Software Documentation, and Technical Data for Commercial Items are licensed to the U.S. Government under vendor's standard commercial license.

Links to third-party websites take you outside the Hewlett Packard Enterprise website. Hewlett Packard Enterprise has no control over and is not responsible for information outside the Hewlett Packard Enterprise website.

Acknowledgments

Intel® and Intel®Xeon® are trademarks of Intel Corporation in the U.S. and other countries.

Linux® is the registered trademark of Linus Torvalds in the U.S. and other countries.

Red Hat® Enterprise Linux® is a registered trademark of Red Hat, Inc. in the United States and other countries.

Windows Server® is either registered trademarks or trademarks of Microsoft Corporation in the United States and/or other countries.

Contents

Introduction 5
- Persistent memory and HPE NVDIMMs 5
- Operation stages for HPE NVDIMM-Ns 5
- Persistent memory and NVDIMM terminology 5
- NVDIMM performance 6
  - System and processor architecture 6
  - Performance impact of HPE NVDIMM-N population choices 7
  - NUMA (nonuniform memory access) 8
  - Optimizing applications for direct access to persistent memory 8

Component identification 9
- NVDIMM identification 9
  - NVDIMM 2D Data Matrix barcode 9
- NVDIMM LED identification 10
  - NVDIMM-N LED combinations 10
  - NVDIMM Function LED patterns 10

Installation 12
- Server requirements for HPE NVDIMM support 12
- Maximum number of NVDIMMs supported 12
- DIMM and NVDIMM population information 13
  - HPE Server Memory Configurator 13
- DIMM handling guidelines 13
  - Electrostatic discharge 13
    - Preventing electrostatic discharge 13
    - Grounding methods to prevent electrostatic discharge 14
- Installing an NVDIMM 14

Configuring the system 17
- Configuring the system for HPE NVDIMM-Ns 17
- Configuring Persistent Memory options 17
  - Configuring Persistent Memory 17
- Configuring NVDIMM-N Memory Options 18
  - Configuring NVDIMM-N Options 18
    - NVDIMM-N Support 19
    - NVDIMM-N Interleaving 19
    - NVDIMM-N Sanitize/Erase on Next Reboot Policy 19
- Configuring other BIOS/Platform Configuration (RBSU) Options for NVDIMM support 20

Maintenance and management 24
- Viewing NVDIMM-Ns in management software tools 24
- Removing an NVDIMM 24
- NVDIMM sanitization 25
  - NVDIMM sanitization policies 26
  - NVDIMM sanitization guidelines 27

NVDIMM relocation guidelines....27
Balanced and unbalanced NVDIMM configurations....28
Recovering restored data from an NVDIMM-N DRAM....29
NVDIMM-N firmware update....30

Troubleshooting....31
NVDIMM error messages....31
Troubleshooting resources....31

Websites....32

Support and other resources....33
Accessing Hewlett Packard Enterprise Support....33
Accessing updates....33
Customer self repair....34
Remote support....34
Warranty information....34
Regulatory information....35
Documentation feedback....35

Acronyms and abbreviations....36

Introduction

Persistent memory and HPE NVDIMMs

Persistent memory combines the performance of memory with the persistence of traditional storage. NVDIMMs are DIMMs that provide persistent memory and install in standard DIMM slots.

NVDIMM-Ns are NVDIMMs that combine DRAM with NAND flash memory. NVDIMM-Ns back up the DRAM contents to NAND flash memory on power loss. NVDIMM-Ns restore the DRAM contents from NAND flash memory to the DRAM on power-on. NVDIMM-Ns provide applications with the full performance capability of DRAM. HPE NVDIMM-Ns are supported in select HPE ProLiant Gen10 servers and HPE Synergy Gen10 compute modules, drawing power from the HPE Smart Storage Battery to perform the backup. The HPE 16GB NVDIMM is a DDR4 NVDIMM-N.

Operation stages for HPE NVDIMM-Ns

- While the server is powered on:
  - Each HPE NVDIMM-N operates at the speed of a regular HPE SmartMemory DIMM and data is stored.
  - The HPE NVDIMM-N DRAM is presented to the OS and applications as persistent memory, not regular system memory.
  - Special device drivers present persistent memory to applications. Most operating systems present persistent memory as block devices with direct access (DAX) support, allowing applications to directly access the HPE NVDIMM-N DRAM using processor load/store instructions without making system calls.
  - PCIe devices access persistent memory using Memory Read and Memory Write transactions.
- When power to the server is lost:
  - Each NVDIMM-N backs up data from its DRAM to its NAND flash memory.
  - Each NVDIMM-N draws power from the HPE Smart Storage Battery on the server during the backup operation.
- While the server is powered off, data is saved in the NAND flash memory of each NVDIMM-N. The NVDIMM-N does not draw power from the HPE Smart Storage Battery.
- When the server is powered on, each NVDIMM-N restores data from its NAND flash memory to its DRAM during the server POST process.

For more information on persistent memory, see the Hewlett Packard Enterprise website (**http://www.hpe.com/info/persistentmemory**). For more information about HPE NVDIMMs, see the product QuickSpecs on the Hewlett Packard Enterprise website (**http://www.hpe.com/info/qs**).

Persistent memory and NVDIMM terminology

The terminology used in persistent memory tends to overlap and multiple terms might apply for a single component. The HPE 16GB NVDIMM might be referenced using any of the following terms:

- Persistent memory: Memory delivering the performance of memory with the persistence of storage
- NVM: Nonvolatile memory; includes slower technologies, such as flash memory
- DIMM: Dual Inline Memory Module
- RDIMM: Registered DIMM
- NVDIMM: Nonvolatile DIMM; provides persistent memory
- NVDIMM-N: NVDIMM with byte-addressable programming interface to DRAM, backed up to flash memory when needed (energy backed)
- NVRDIMM: NVDIMM that is also an RDIMM
- NVRDIMM-N: NVRDIMM that is also an NVDIMM-N

The HPE 16GB NVDIMM Single Rank x4 DDR4-2666 Module is not any of the following:

- UDIMM: Unbuffered DIMM
- LRDIMM: Load reduced DIMM
- NVLRDIMM: Nonvolatile load reduced DIMM

NVDIMM performance

System and processor architecture

HPE ProLiant Gen10 servers and HPE Synergy Gen10 compute modules using Intel Xeon Scalable processors include the following:

- One or more Intel Xeon Scalable processors
- Each processor has multiple cores and two memory controllers interconnected in a mesh architecture.
- Each memory controller has three DDR4 memory channels.
    - A 2667 MT/s memory channel provides 21.33 GB/s of nominal bandwidth (128 GB/s total per processor).
    - DDR4 is a half-duplex parallel interface, so it transfers only read data or write data at one time.
- Each memory channel has two DIMM sockets.

  Access to the DIMMs share the memory channel bandwidth.
- The processors are interconnected with Intel Ultra Path Interconnect (UPI) links.
    - Two-socket servers connect the processors with all the UPI links.
        - Processors with three UPI links have low-latency, 31.2 GB/s paths to remote memory (62.4 GB/s for mixed reads and writes)
        - Processors with two UPI links have low-latency, 20.8 GB/s paths to remote memory (41.6 GB/s for mixed reads and writes)
    - Four-socket servers connect the processors in a cross bar configuration.

  - Processors with three UPI links have low-latency, 10.4 GB/s paths to remote memory
  - Processors with two UPI links are connected in a ring configuration and have variable-latency, 10.4 GB/s paths to remote memory

For more information about the processor architecture, see the Intel Xeon Processor Scalable Family Technical Overview on the Intel website (**https://software.intel.com/en-us/articles/intel-xeon-processor-scalable-family-technical-overview**).

See the HPE server QuickSpecs on the Hewlett Packard Enterprise website (**http://www.hpe.com/info/qs**) for information about the following for each processor model:

- Number of UPI links
- UPI speed (in GT/s)
- DDR4 memory channel speed (in MT/s)

Performance impact of HPE NVDIMM-N population choices

Memory bandwidth scales with the number of memory channels used.

Since NVDIMM-Ns are designed to unleash maximum system performance, Hewlett Packard Enterprise expects most servers using NVDIMM-Ns are based on one HPE SmartMemory DIMM in each channel (six per processor). The second slots are then populated with HPE NVDIMM-Ns, the number of which being based on the desired persistent memory capacity and performance. Populating any extra second slots with more HPE SmartMemory DIMMs increases capacity, but results in unbalanced interleaving configurations that have unpredictable memory performance.

Unbalanced interleaving configurations result in sharing memory bandwidth between the HPE SmartMemory DIMMs and HPE NVDIMM-Ns. With six HPE SmartMemory DIMMs and six HPE NVDIMM-Ns, assuming only local accesses:

- During any time in which the processors are only accessing HPE SmartMemory DIMMs, they get 128 GB/s nominal bandwidth.
- During any time in which the processors are only accessing NVDIMM-Ns, they get 128 GB/s nominal bandwidth.
- During any time in which the processors are accessing HPE SmartMemory DIMMs and NVDIMM-Ns equally, they get an average of 64 GB/s nominal bandwidth from each.

With six HPE SmartMemory DIMMs and three HPE NVDIMM-Ns, assuming only local accesses:

- During any time in which the processors are only accessing HPE SmartMemory DIMMs, they get 128 GB/s nominal bandwidth.
- During any time in which the processors are only accessing HPE NVDIMM-Ns, they get 64 GB/s nominal bandwidth.
- During any time in which the processors are only accessing HPE SmartMemory DIMMs and HPE NVDIMM-Ns equally, they get an average of the following:
  - 65 GB/s nominal bandwidth from the HPE SmartMemory DIMMs.
  - 32 GB/s nominal bandwidth from the HPE NVDIMM-Ns.

Regular memory is commonly interleaved across channels to provide the best performance to the processor cores and their caches. Channel Interleaving is not always the best choice for NVDIMM-Ns. If the amount of persistent memory needed requires more than six NVDIMM-Ns, then Hewlett Packard Enterprise recommends that you disable NVDIMM-N Interleaving. Disabling NVDIMM-N Interleaving ensures that the processors have predictable performance. If NVDIMM-N Interleaving is disabled, applications must deal with many 16 GiB block devices.

For more information, see *Server Memory and Persistent Memory population rules for HPE Intel Xeon Gen10 servers* on the Hewlett Packard Enterprise website (**http://www.hpe.com/docs/memory-population-rules**).

NUMA (nonuniform memory access)

Since processors have lower latency and higher bandwidth to local memory than to remote memory (memory on other processors), the server is described as having a NUMA architecture. It is important that applications understand this topology and ensure threads access local memory whenever possible. For example, operating systems provide APIs so applications can do the following:

- Lock down threads to certain processors and processor cores
- Request that memory is allocated in local memory

Persistent memory is impacted the same way. However, the OS does not "allocate memory" in persistent memory, so the programming interfaces and APIs differ. It is important that you populate regular memory in the same way on all processors. Populating NVDIMMs in a balanced manner across processors is not always important for persistent memory. Some applications may prefer six NVDIMM-Ns on one processor (creating a 96 GiB block device) rather than three NVDIMM-Ns on each of two processors (creating two 48 GiB block devices).

Optimizing applications for direct access to persistent memory

Persistent memory devices are presented as fast block devices to software with direct-access (DAX) support.

When an application is not optimized for persistent memory, the application accesses regular memory several times for each time that persistent memory is accessed. For example, an application does the following:

1. Performs a computation
2. Writes the result from its registers to regular memory
3. Asks the operating system to store the data in persistent memory which includes reading from regular memory and writing to persistent memory

The process requires two writes and one read. Although caching mitigates the impact, an application fully utilizing system performance capabilities will end up limited by memory bandwidth.

Applications optimized to perform direct access to persistent memory eliminate the interim memory buffer. The application performs a computation and writes the result from its registers directly to persistent memory, eliminating two transactions. When using applications optimized for persistent memory, you reduce the demands on regular memory capacity and performance.

Component identification

NVDIMM identification

NVDIMM boards are blue instead of green. This change to the color makes it easier to distinguish NVDIMMs from DIMMs.

To determine NVDIMM characteristics, see the full product description as shown in the following example:

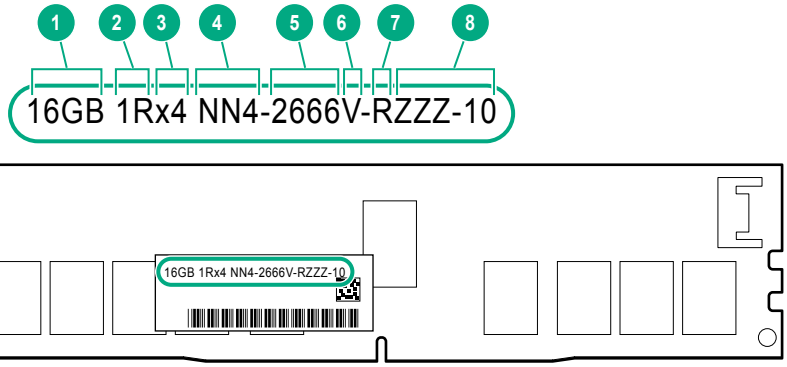

Item	Description	Definition
1	Capacity	16 GiB
2	Rank	1R (Single rank)
3	Data width per DRAM chip	x4 (4 bit)
4	Memory type	NN4=DDR4 NVDIMM-N
5	Maximum memory speed	2667 MT/s
6	Speed grade	V (latency 19-19-19)
7	DIMM type	RDIMM (registered)
8	Other	—

For more information about NVDIMMs, see the product QuickSpecs on the Hewlett Packard Enterprise website (**http://www.hpe.com/info/qs**).

NVDIMM 2D Data Matrix barcode

The 2D Data Matrix barcode is on the right side of the NVDIMM label and can be scanned by a cell phone or other device.

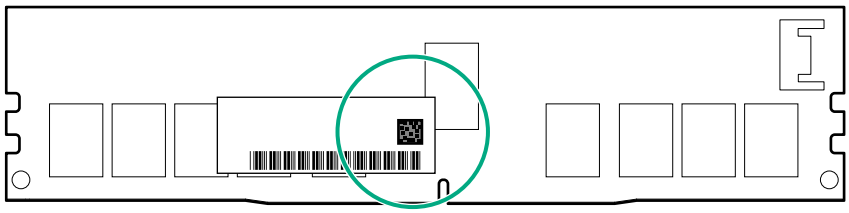

When scanned, the following information from the label can be copied to your cell phone or device:

- (P) is the module part number.
- (L) is the technical details shown on the label.
- (S) is the module serial number.

Example: (P)HMN82GR7AFR4N-VK (L)16GB 1Rx4 NN4-2666V-RZZZ-10(S)80AD-01-1742-11AED5C2

NVDIMM LED identification

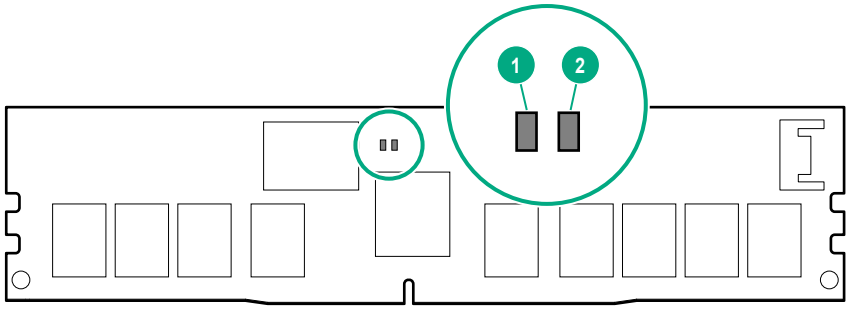

Item	LED description	LED color
1	Power LED	Green
2	Function LED	Blue

NVDIMM-N LED combinations

State	Definition	NVDIMM-N Power LED (green)	NVDIMM-N Function LED (blue)
0	AC power is on (12 V rail) but the NVM controller is not working or not ready.	On	Off
1	AC power is on (12 V rail) and the NVM controller is ready.	On	On
2	AC power is off or the battery is off (12 V rail off).	Off	Off
3	AC power is on (12 V rail) or the battery is on (12 V rail) and the NVDIMM-N is active (backup and restore).	On	Flashing

NVDIMM Function LED patterns

For the purpose of this table, the NVDIMM-N LED operates as follows:

- Solid indicates that the LED remains in the on state.
- Flashing indicates that the LED is on for 2 seconds and off for 1 second.
- Fast-flashing indicates that the LED is on for 300 ms and off for 300 ms.

State	Definition	NVDIMM-N Function LED
0	The restore operation is in progress.	Flashing
1	The restore operation is successful.	Solid or On
2	Erase is in progress.	Flashing
3	The erase operation is successful.	Solid or On
4	The NVDIMM-N is armed, and the NVDIMM-N is in normal operation.	Solid or On
5	The save operation is in progress.	Flashing
6	The NVDIMM-N finished saving and battery is still turned on (12 V still powered).	Solid or On
7	The NVDIMM-N has an internal error or a firmware update is in progress. For more information about an NVDIMM-N internal error, see the IML.	Fast-flashing

Installation

Server requirements for HPE NVDIMM support

Before installing an HPE 16GB NVDIMM in a server, make sure that the following components and software are available:

- A supported HPE server or compute module using Intel Xeon Scalable Processors: For more information, see the NVDIMM QuickSpecs on the Hewlett Packard Enterprise website (**http://www.hpe.com/info/qs**).
- An HPE Smart Storage Battery
- A minimum of one HPE SmartMemory DIMM: The system cannot have only NVDIMM-Ns installed.
- A supported operating system with persistent memory/NVDIMM drivers. For the latest software information, see the Hewlett Packard Enterprise website (**http://persistentmemory.hpe.com**).
  - Windows Server 2016
  - Windows Server 2012 R2 with production driver from Hewlett Packard Enterprise
  - Red Hat Enterprise Linux 7.3
  - SUSE Linux Enterprise Server 12 SP2
  - SUSE Linux Enterprise Server 12 SP3
- Minimum versions of the following:
  - System ROM 1.26 or later
  - Innovation Engine (IE) Firmware 1.5.2 or later
  - iLO Firmware Version 1.15 or later

To determine NVDIMM support for your server, see the server QuickSpecs on the Hewlett Packard Enterprise website (**http://www.hpe.com/info/qs**).

Maximum number of NVDIMMs supported

Server	Maximum number of NVDIMMs
HPE ProLiant DL580 Gen10 Server	24
HPE ProLiant DL560 Gen10 Server	24
HPE ProLiant DL380 Gen10 Server	12
HPE ProLiant DL360 Gen10 Server	12
HPE Synergy 660 Gen10 Compute Module	12

Table Continued

Server	Maximum number of NVDIMMs
HPE Synergy 480 Gen10 Compute Module	12
HPE ProLiant BL460c Gen10 Server Blade	2

DIMM and NVDIMM population information

For specific DIMM and NVDIMM population information, see the DIMM population guidelines on the Hewlett Packard Enterprise website (**http://www.hpe.com/docs/memory-population-rules**).

HPE Server Memory Configurator

The HPE Server Memory Configurator is a web-based tool to assist with populating DDR Memory in ProLiant servers. For more information, see the HPE Server Memory Configurator tool on the Hewlett Packard Enterprise website (**https://memoryconfigurator.hpe.com**).

DIMM handling guidelines

CAUTION:

Failure to properly handle DIMMs can damage DIMM components and the system board connector.

When handling a DIMM, observe the following guidelines:

- Avoid electrostatic discharge.
- Always hold DIMMs by the side edges only.
- Avoid touching the connectors on the bottom of the DIMM.
- Never wrap your fingers around a DIMM.
- Avoid touching the components on the sides of the DIMM.
- Never bend or flex the DIMM.

When installing a DIMM, observe the following guidelines:

- Before seating the DIMM, open the DIMM slot and align the DIMM with the slot.
- To align and seat the DIMM, use two fingers to hold the DIMM along the side edges.
- To seat the DIMM, use two fingers to apply gentle pressure along the top of the DIMM.

For more information, see the website (**http://www.hpe.com/support/DIMM-20070214-CN**).

Electrostatic discharge

Preventing electrostatic discharge

To prevent damaging the system, be aware of the precautions you must follow when setting up the system or handling parts. A discharge of static electricity from a finger or other conductor may damage system boards or other static-sensitive devices. This type of damage may reduce the life expectancy of the device.

Procedure

- Avoid hand contact by transporting and storing products in static-safe containers.
- Keep electrostatic-sensitive parts in their containers until they arrive at static-free workstations.
- Place parts on a grounded surface before removing them from their containers.
- Avoid touching pins, leads, or circuitry.
- Always be properly grounded when touching a static-sensitive component or assembly.

Grounding methods to prevent electrostatic discharge

Several methods are used for grounding. Use one or more of the following methods when handling or installing electrostatic-sensitive parts:

- Use a wrist strap connected by a ground cord to a grounded workstation or computer chassis. Wrist straps are flexible straps with a minimum of 1 megohm ±10 percent resistance in the ground cords. To provide proper ground, wear the strap snug against the skin.
- Use heel straps, toe straps, or boot straps at standing workstations. Wear the straps on both feet when standing on conductive floors or dissipating floor mats.
- Use conductive field service tools.
- Use a portable field service kit with a folding static-dissipating work mat.

If you do not have any of the suggested equipment for proper grounding, have an authorized reseller install the part.

For more information on static electricity or assistance with product installation, contact an authorized reseller.

Installing an NVDIMM

CAUTION:

To avoid damage to the hard drives, memory, and other system components, the air baffle, drive blanks, and access panel must be installed when the server is powered up.

CAUTION:

To avoid damage to the hard drives, memory, and other system components, be sure to install the correct DIMM baffles for your server model.

CAUTION:

DIMMs are keyed for proper alignment. Align notches in the DIMM with the corresponding notches in the DIMM slot before inserting the DIMM. Do not force the DIMM into the slot. When installed properly, not all DIMMs will face in the same direction.

CAUTION:

Electrostatic discharge can damage electronic components. Be sure you are properly grounded before beginning this procedure.

CAUTION:

Failure to properly handle DIMMs can damage the DIMM components and the system board connector. For more information, see the DIMM handling guidelines in the troubleshooting guide for your product on the Hewlett Packard Enterprise website:

- HPE ProLiant Gen10 (**http://www.hpe.com/info/gen10-troubleshooting**)
- HPE Synergy (**http://www.hpe.com/info/synergy-troubleshooting**)

CAUTION:

Unlike traditional storage devices, NVDIMMs are fully integrated in with the ProLiant server. Data loss can occur when system components, such as the processor or HPE Smart Storage Battery, fails. HPE Smart Storage battery is a critical component required to perform the backup functionality of NVDIMMs. It is important to act when HPE Smart Storage Battery related failures occur. Always follow best practices for ensuring data protection.

For server-specific steps used in this procedure, see the server user guide on the Hewlett Packard Enterprise website:

- HPE ProLiant Gen10 servers (**http://www.hpe.com/info/proliantgen10-docs**)
- HPE Synergy Gen10 compute modules (**http://www.hpe.com/info/synergy-docs**)

Procedure

1. Power down the server.
2. If necessary, remove all power from the server:
   a. Disconnect each power cord from the power source.
   b. Disconnect each power cord from the server.
3. Do one of the following:
   - Extend the server from the rack.
   - Remove the server from the rack.
4. Remove the access panel.
5. Remove all components necessary to access the server DIMM slots and the HPE Smart Storage Battery.
6. Locate any NVDIMMs already installed in the server.
7. Verify that all LEDs on any installed NVDIMMs are off.
8. Install the NVDIMM.

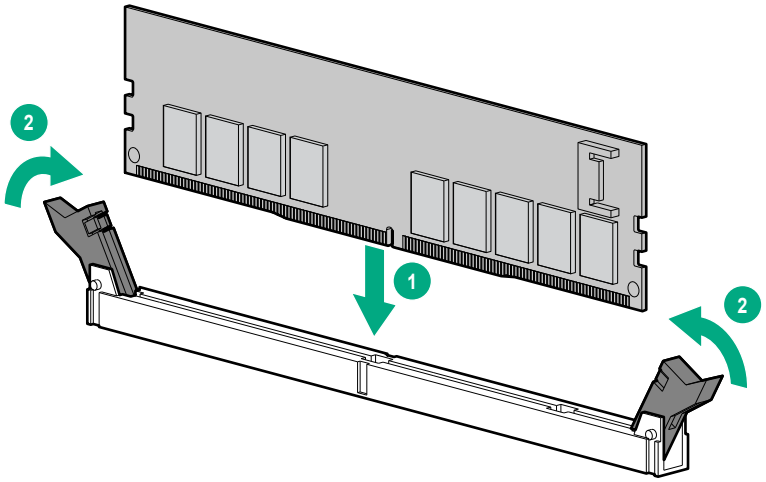

9. Install the HPE Smart Storage Battery.
10. Connect the HPE Smart Storage Battery cable to the system board.
11. Install any components removed to access the DIMM slots and the HPE Smart Storage Battery.
12. Install the access panel.
13. Slide or install the server into the rack.
14. If removed, reconnect all power cables.
15. Power up the server.
16. If required, sanitize the NVDIMMs.

More information

DIMM handling guidelines on page 13
NVDIMM LED identification on page 10
NVDIMM-N Sanitize/Erase on Next Reboot Policy on page 19

Configuring the system

Configuring the system for HPE NVDIMM-Ns

Configure the system for NVDIMM-Ns using either of the following:

- UEFI System Utilities—For more information, see the Hewlett Packard Enterprise website (**http://www.hpe.com/info/uefi/docs**).
- iLO RESTful API for HPE iLO 5—For more information, see **https://hewlettpackard.github.io/ilo-rest-api-docs/ilo5/**.

Configuring Persistent Memory options

To configure the server for the following Persistent Memory settings, launch the System Utilities screen. To launch the System Utilities screen, press the **F9** key during POST.

To configure Persistent Memory options using iLO RESTful API for iLO 5, use the associated property name:

- Persistent Memory Backup Power Policy—**`PersistentMemBackupPowerPolicy`**
- Persistent Memory Integrity Check—**`PersistentMemScanMem`**
- Persistent Memory Address Range Scrub—**`PersistentMemAddressRangeScrub`**

Configuring Persistent Memory

System Utilities only displays this menu if you have installed Persistent Memory.

Procedure

1. From the **System Utilities** screen, select **System Configuration** > **BIOS/Platform Configuration (RBSU)** > **Memory Options** > **Persistent Memory Options**.
2. Configure options.
   - **Persistent Memory Backup Power Policy**—Controls whether the system waits during system boot for batteries to charge if sufficient battery backup power for the installed persistent memory is not available.
     - **Wait for Backup Power on Boot**—The system waits during boot for batteries to charge.
     - **Continue Boot without Backup Power**—The system boots even if sufficient battery backup power is not available. If sufficient battery backup power is not available, the configured memory is not used by the operating system as persistent storage or as system memory.
   - **Persistent Memory Integrity Check**
     - **Enabled**—Persistent memory is checked during system boot to determine data integrity. Depending on the **Persistent Memory Address Range Scrub** setting, discovered errors during

the data integrity check are either presented to the operating system for recovery, or cause the persistent memory to be mapped out and unavailable to the operating system.

- **Disabled**—Disables data integrity checking. Any persistent memory unable to read data, or that has bad data might cause uncorrectable errors that result a system crash.

- **Persistent Memory Address Range Scrub**

  - **Enabled**—Enables a supported OS to attempt recovery from an uncorrectable memory error detected in the NVDIMM memory.
  - **Disabled**—Disables the NVDIMM memory on the next boot after detecting an uncorrectable memory error in the NVDIMM. If the NVDIMM memory **Memory Interleaving** option is enabled, a disabled NVDIMM includes all the modules or regions within the set.

3. Save your setting.

Configuring NVDIMM-N Memory Options

To configure the server for the following NVDIMM-N settings, launch the System Utilities screen. To launch the System Utilities screen, press the **F9** key during POST.

To configure NVDIMM-N options using iLO RESTful API for iLO 5, use the associated property name:

- NVDIMM-N Support—**`NvDimmNMemFunctionality`**
- NVDIMM-N Interleaving—**`NvDimmNMemInterleaving`**
- NVDIMM-N Sanitize/Erase on Next Reboot Policy—**`NvDimmNSanitizePolicy`**

Configuring NVDIMM-N Options

Procedure

1. From the System Utilities screen, select **System Configuration** > **BIOS/Platform Configuration (RBSU)** > **Memory Options** > **Persistent Memory Options** > **NVDIMM-N Options**.
2. Select **Enabled** or **Disabled** for the following options:

   - **NVDIMM-N Support**
   - **NVDIMM-N Interleaving**
   - **NVDIMM-N Sanitize/Erase on Next Reboot Policy**

     IMPORTANT:

     Sanitizing/Erasing an NVDIMM-N results in the loss of **all** user data saved in the NVDIMM-N. Hewlett Packard Enterprise strongly recommends that you perform a manual backup of all user data in the NVDIMM-Ns before sanitizing/erasing the NVDIMM-Ns.

   - **Sanitize/Erase all NVDIMM-N in the System**

- **Sanitize/Erase all NVDIMM-N on Processor**- These menu items differ based on your server configuration.
- **Sanitize/Erase Processor 1 DIMM 2**- These menu items differ based on your server configuration.

3. Save your changes.

NVDIMM-N Support

This option enables NVDIMM-N support (including backing up the contents of the memory to flash on power down or reset) to be enabled or disabled. If **Disabled** is selected for this option, the NVDIMM-Ns in the system are not presented to the operating system as either persistent storage or system memory.

NVDIMM-N Interleaving

This option enables NVDIMM-Ns installed on a particular processor to be interleaved with other NVDIMM-Ns in the memory map. This option does not impact the interleaving of HPE SmartMemory DIMMs. Interleaving is never enabled across NVDIMM-Ns and HPE SmartMemory DIMMs. NVDIMM-Ns installed on different processors are never interleaved together. If this setting is changed (to **Enabled** or **Disabled**), then all installed NVDIMM-Ns must be sanitized. If all installed NVDIMM-Ns are not sanitized, then an error condition is reported on the next boot and the NVDIMM-Ns are not available for use.

More information

NVDIMM-N Sanitize/Erase on Next Reboot Policy on page 19

NVDIMM-N Sanitize/Erase on Next Reboot Policy

This setting is part of the process to sanitize or erase all user data and error status data saved in the selected NVDIMM-Ns. After enabling the NVDIMM-N Sanitize/Erase on Next Reboot Policy, the screen displays various options for sanitizing NVDIMMs. The following selections are available depending on the NVDIMM-Ns installed on the server:

- Sanitize/Erase all NVDIMM-N in the System — Sanitizes all NVDIMM-Ns installed in the server on reboot.
- Sanitize/Erase all NVDIMM-N on Processor X— Sanitizes all NVDIMM-Ns installed in the DIMM slots for processor X on reboot.
- Sanitize/Erase Processor X DIMM Y — Sanitizes the NVDIMM-N installed in DIMM slot Y for processor X on reboot. A selection is available for each Processor X DIMM slot that contains an NVDIMM-N.

Selected NVDIMM-Ns are sanitized on the next reboot of the system. The largest group of NVDIMM-Ns selected is sanitized. For example, if **Sanitize/Erase all NVDIMM-N on Processor 1** is enabled and **Sanitize/Erase Processor 1 DIMM 8** is disabled, all NVDIMM-Ns on processor 1 are sanitized including processor 1 DIMM 8.

The following policies control the action of the system after NVDIMM-Ns are sanitized/erased:

- Power off the system after sanitizing/erasing NVDIMMs
- Boot to the operating system after sanitizing NVDIMMs
- Boot to the System Utilities after sanitizing NVDIMMs

More information

NVDIMM sanitization policies on page 26

Configuring other BIOS/Platform Configuration (RBSU) Options for NVDIMM support

When NVDIMMs are installed, you might need to change settings that are not specific to NVDIMMs. When necessary, use the following additional System Utilities settings to configure the server:

- **Advanced Memory Protection**

  If NVDIMM-Ns are installed on a server, always select **Advanced ECC Support** in the Advanced Memory Protection menu. Some Memory options are not supported when NVDIMMs are installed. The Memory options not supported are Online Spare Memory, Mirrored Memory, and Lockstep mode with DDDC. When one of the unsupported options is selected, the system generates messages. NVDIMMs are disabled until the configuration is set to Advanced ECC. View the messages in the IML. When Advanced Memory Protection is set to **Advanced ECC Support**, Advanced Memory Protection is hidden in the menu.

  - UEFI System Utilities: **System Configuration** > **BIOS/Platform Configuration (RBSU)** > **Memory Options** > **Advanced Memory Protection**
  - iLO RESTful API property name: **`AdvancedMemProtection`**

- **Maximum Memory Bus Frequency**

  Use the **Maximum Memory Bus Frequency** option to configure the system to run memory at a lower maximum speed than that supported by the installed processor and DIMM configuration.

  Hewlett Packard Enterprise recommends that you enable **Maximum Memory Bus Frequency**.

  - UEFI System Utilities: **System Configuration** > **BIOS/Platform Configuration (RBSU)** > **Memory Options** > **Maximum Memory Bus Frequency**
  - iLO RESTful API property name: **`MaxMemBusFreqMHz`**

- **Memory Patrol Scrubbing**

  When enabled, **Memory Patrol Scrubbing** corrects memory soft errors. Over the length of the system runtime, **Memory Patrol Scrubbing** reduces the risk of producing multibit and uncorrectable errors.

  - UEFI System Utilities: **System Configuration** > **BIOS/Platform Configuration (RBSU)** > **Memory Options** > **Memory Patrol Scrubbing**
  - iLO RESTful API property name: **`MemPatrolScrubbing`**

- **Node interleaving**

  Node interleaving interleaves memory across processors and is not supported with NVDIMM-Ns. When NVDIMM-Ns are installed on a server, always disable **Node Interleaving**. The system generates messages and the NVDIMMs are disabled until **Node Interleaving** is disabled. View the messages in the IML.

  - UEFI System Utilities: **System Configuration** > **BIOS/Platform Configuration (RBSU)** > **Memory Options** > **Node Interleaving**
  - iLO RESTful API property name: **`NodeInterleaving`**

- **Memory Mirroring Mode**

When NVDIMM-Ns are installed on a server, always disable **Memory Mirroring Mode**. The system generates messages and the NVDIMMs are disabled until **Memory Mirroring Mode** is disabled. View the messages in the IML.

- UEFI System Utilities: **System Configuration** > **BIOS/Platform Configuration (RBSU)** > **Memory Options** > **Memory Mirroring Mode**
- iLO RESTful API property name: **`MemMirrorMode`**

- **Opportunistic Self-Refresh**

  Use **Opportunistic Self-Refresh** to allow the memory controller to enter self-refresh mode during periods of low memory utilization. **Opportunistic Self-Refresh** is not supported on the server when NVDIMMs are installed.

  - UEFI System Utilities: **System Configuration** > **BIOS/Platform Configuration (RBSU)** > **Memory Options** > **Opportunistic Self Refresh**
  - iLO RESTful API property name: **`OpportunisticSelfRefresh`**

- **Memory Remap**

  Use the **Memory Remap** option to remap system memory that might be disabled due to a failure event, such as an uncorrectable memory error. The Remap All Memory Option causes the system to make all regular memory in the system available again on the next boot. The No Action option leaves any affected regular memory unavailable to the system. The Memory Remap option is currently unavailable for NVDIMM-Ns. To remap disabled NVDIMM-Ns, sanitize them (**NVDIMM sanitization** on page 25).

  - UEFI System Utilities: **System Configuration** > **BIOS/Platform Configuration (RBSU)** > **Memory Options** > **Memory Remap**
  - iLO RESTful API property name: **`MemoryRemap`**

- **Memory Refresh Rate**

  The Memory Refresh Rate option controls the refresh rate of the memory controller and might affect the performance and resiliency of the server memory. It is recommended that you leave this setting in the default state unless indicated in other documentation for this server.

  For optimal power consumption and performance, Hewlett Packard Enterprise recommends that you select **1x Refresh**.

  - UEFI System Utilities: **System Configuration** > **BIOS/Platform Configuration (RBSU)** > **Memory Options** > **Memory Refresh Rate**
  - iLO RESTful API property name: **`MemRefreshRate`**

- **Extended Memory Test**

  Use this option to configure whether the system validates memory during the memory initialization process.

  When Enabled, the **Extended Memory Test** always skips NVDIMM-N DRAM. Use NVDIMM-N Data Integrity Checking to check for uncorrectable errors after the restore.

- UEFI System Utilities: **System Configuration** > **BIOS/Platform Configuration (RBSU)** > **System Options** > **Boot Time Optimizations** > **Extended Memory Test**
- iLO RESTful API property name: **`ExtendedMemTest`**

- **Memory Fast Training**

  Use the **Memory Fast Training** option to configure memory training on server reboots. When enabled, the platform uses the previously saved memory training parameters determined from the last cold boot of the server. This information improves server boot time.

  When installed on your server, and the **Memory Fast Training** setting is enabled, NVDIMM-N memory contents are left undisturbed during warm resets. If Memory Fast Training is disabled, each warm reset is upgraded to a cold reset and results in an NVDIMM-N backup and restore. Hewlett Packard Enterprise recommends that you leave Memory Fast Training enabled.

  - UEFI System Utilities: **System Configuration** > **BIOS/Platform Configuration (RBSU)** > **System Options** > **Boot Time Optimizations** > **Memory Fast Training**
  - iLO RESTful API property name: **`MemFastTraining`**

- **Memory Clear on Warm Reset**

  Enabling **Memory Clear on Warm Reset** does not clear the memory stored on NVDIMM-N.

  When enabled, memory is cleared from the HPE SmartMemory DIMMs on all reboots. When disabled, memory is only cleared on a warm reset if requested by the operating system. Disabling this option can save boot time by skipping the clearing of memory on warm resets.

  - UEFI System Utilities: **System Configuration** > **BIOS/Platform Configuration (RBSU)** > **System Options** > **Boot Time Optimizations** > **Memory Fast Training**
  - iLO RESTful API property name: **`MemClearWarmReset`**

- **Sub-NUMA Clustering**

  Sub-NUMA Clustering is not supported when NVDIMM-Ns are installed. When NVDIMM-Ns are installed in the system, **Sub-NUMA Clustering** is automatically set to Disabled.

  - UEFI System Utilities: **System Configuration** > **BIOS/Platform Configuration (RBSU)** > **Power and Performance Options** > **Sub-NUMA Clustering**
  - iLO RESTful API property name: **`SubNumaClustering`**

- **Intel Performance Monitoring Support**

  Intel processors include performance counters that software can use to measure DRAM performance (including NVDIMM-N performance). This option is a monitoring tool, and does not impact performance. For example, the Intel Performance Counter Monitor (PCM) tools can report per-channel bandwidth.

  Hewlett Packard Enterprise recommends that you enable **Intel Performance Monitoring Support** so you can run the NVDIMM-N performance monitoring tools.

- UEFI System Utilities: **System Configuration** > **BIOS/Platform Configuration (RBSU)** > **Power and Performance Options** > **Intel Performance Monitoring Support**
- iLO RESTful API property name: **`IntelPerfMonitoring`**

- **User default options**

  After configuring the NVDIMM settings for the server, Hewlett Packard Enterprise recommends saving the settings as the user default settings.

  - UEFI System Utilities: **System Configuration** > **BIOS/Platform Configuration (RBSU)** > **System Default Options** > **User Default Options**
  - iLO RESTful API property name: **`SaveUserDefaults`**

Maintenance and management

Viewing NVDIMM-Ns in management software tools

When viewing memory information using certain management tools, such as SMH, NVDIMM-N information might not be distinguished from RDIMM information. HPE iLO displays the NVDIMM and RDIMM information separately.

Removing an NVDIMM

CAUTION:

Do not remove an NVDIMM when any LEDs on any NVDIMM in the system are illuminated. Removing an NVDIMM when an LED is illuminated might cause a loss of data.

CAUTION:

Electrostatic discharge can damage electronic components. Be sure you are properly grounded before beginning this procedure.

CAUTION:

Failure to properly handle DIMMs can cause damage to DIMM components and the system board connector.

Before handling or installing the DIMMs, see the DIMM handling guidelines.

For server-specific steps used in this procedure, see the server maintenance and service guide on the Hewlett Packard Enterprise website:

- HPE ProLiant Gen10 servers (**http://www.hpe.com/info/proliantgen10-docs**)
- HPE Synergy Gen10 compute modules (**http://www.hpe.com/info/synergy-docs**)

Procedure

1. If necessary, sanitize/erase any NVDIMMs being removed or relocated.
2. Power down the server.
3. If necessary, remove all power from the server:
   a. Disconnect each power cord from the power source.
   b. Disconnect each power cord from the server.
4. Do one of the following:
   - Extend the server from the rack.
   - Remove the server from the rack.
5. Remove the access panel.

6. Remove all components necessary to access the server DIMM slots and the HPE Smart Storage Battery.
7. Observe the NVDIMM LEDs. Do not remove an NVDIMM when any NVDIMM LED in the system is illuminated.
8. Remove the NVDIMM-N.

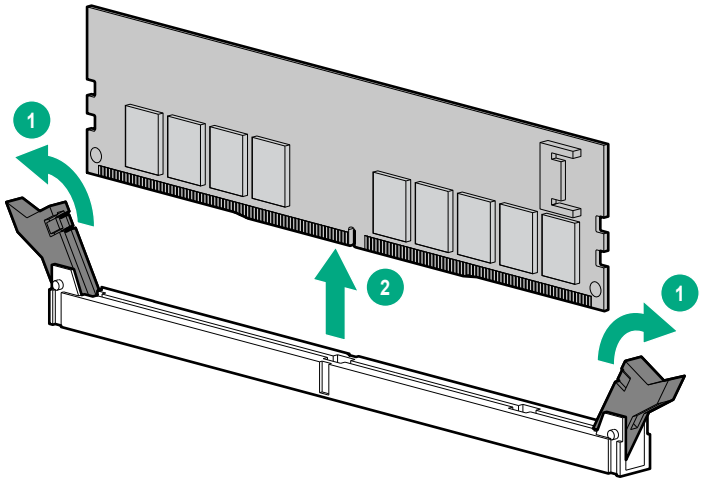

9. Install any components removed to access the DIMM slots and the HPE Smart Storage Battery.
10. Install the access panel.
11. Slide the server into the rack.
12. If removed, reconnect all power cables.
13. Power up the server.

More information

DIMM handling guidelines on page 13
NVDIMM relocation guidelines on page 27
NVDIMM LED identification on page 10

NVDIMM sanitization

Media sanitization is defined by NIST SP800-88 *Guidelines for Media Sanitization* (Rev 1, Dec 2014) as "a general term referring to the actions taken to render data written on media unrecoverable by both ordinary and extraordinary means."

The specification defines the following levels:

- Clear: Overwrite user-addressable storage space using standard write commands; might not sanitize data in areas not currently user-addressable (such as bad blocks and overprovisioned areas)
- Purge: Overwrite or erase all storage space that might have been used to store data using dedicated device sanitize commands, such that data retrieval is "infeasible using state-of-the-art laboratory techniques"
- Destroy: Ensure that data retrieval is "infeasible using state-of-the-art laboratory techniques" and render the media unable to store data (such as disintegrate, pulverize, melt, incinerate, or shred)

The NVDIMM-N Sanitize options are intended to meet the Purge level.

NIST SP800-88 *Guidelines for Media Sanitization* (Rev 1, Dec 2014) is available for download from the NIST website (**http://nvlpubs.nist.gov/nistpubs/SpecialPublications/NIST.SP.800-88r1.pdf**).

More information

NVDIMM-N Sanitize/Erase on Next Reboot Policy on page 19

NVDIMM sanitization policies

The System Utilities menu item for NVDIMM-N Sanitize/Erase on Next Reboot policy provides the following options:

- Sanitize/Erase and Boot to Operating System—Use this policy for the following scenarios:
  - After you add a new NVDIMM-N to a server
  - If an NVDIMM-N is mapped out due to errors and you want to use the NVDIMM-N again

    For example, you removed an NVDIMM-N while the LEDs were still illuminated, causing backup errors.
  - After you move NVDIMM-Ns previously used in another server to a new server

    If everything in the new server is an exact match to the previous server, you would not need to sanitize the NVDIMM-N.
- Sanitize/Erase and Power System Off—Use this policy for the following scenarios:
  - Decommissioning an NVDIMM-N
  - Recommissioning an NVDIMM-N (move to another server with no requirement to preserve the data)
- Sanitize/Erase to Factory Defaults and Power System Off—Use this policy when retiring an NVDIMM-N or returning the NVDIMM-N to Hewlett Packard Enterprise (service replacement).
- Sanitize/Erase and Boot to System Utilities—Use this policy to change any BIOS/Platform Configuration (RBSU) setting that results in the data on the NVDIMM-N no longer being interpreted the same way. Examples include NVDIMM-N Memory Interleaving.

After selecting a sanitize policy and one or more NVDIMM-Ns to sanitize, the system upgrades all warm reset requests into cold resets. The first cold reset:

1. Flushes any write data still pending in processor write buffers to DRAM.
2. Maps out the NVDIMM-Ns.
3. Sends the sanitize command to the NVDIMM-Ns.

NVDIMM sanitization policy	After completing the sanitize commands, the system:
Sanitize/Erase and Power System Off	Powers off after completing the Sanitize commands.
Sanitize/Erase to Factory Defaults and Power System Off	Powers off after completing the Sanitize commands.

Table Continued

NVDIMM sanitization policy	After completing the sanitize commands, the system:
Sanitize/Erase and Boot to Operating System	Performs another cold reset to map in the NVDIMM-Ns again.
Sanitize/Erase and Boot to System Utilities	Performs another cold reset to map in the NVDIMM-Ns again.

More information

NVDIMM-N Sanitize/Erase on Next Reboot Policy on page 19

NVDIMM sanitization guidelines

All scenarios mentioned assume that the DIMM and NVDIMM population guidelines are followed.

Scenarios in which NVDIMM-N sanitization is required before using the NVDIMM-Ns

- When a new NVDIMM-N is added to the system, sanitize the new NVDIMM-N before the NVDIMM-N can be used.
- When removing an NVDIMM-N from a server with NVDIMM-N Interleaving set to **Enabled**, sanitize all the NVDIMM-Ns on the processor where the NVDIMM-N was removed.
- When a previously used NVDIMM-N is added to the system, do one of the following:
  - If the NVDIMM Interleaving setting is set to Enabled, then sanitize all the NVDIMM-Ns on that processor before using the NVDIMM-Ns.
  - If the NVDIMM Interleaving setting is set to Disabled, then no NVDIMM-N sanitization is required.
- When any of the following settings are changed, sanitize all the NVDIMM-Ns in the system:
  - Channel Interleaving
  - NVDIMM-N Interleaving

Scenarios in which NVDIMM-N sanitization might not be required

- The NVDIMM-N was already in use in another server that matches the new server in both hardware and System Utilities settings.
- The NVDIMM-N is installed in the new server in the same DIMM slot as in the original server.
- If NVDIMM-N is used when NVDIMM-N Interleaving is set to Enabled, install the NVDIMM-N only in the same DIMM slot in the new server.
- If the NVDIMM-N is used with NVDIMM-N Interleaving set to Disabled, install the NVDIMM-N in any slot on the server.

NVDIMM relocation guidelines

When relocating NVDIMM-Ns to another DIMM slot on the server or to another server, observe the following guidelines:

Requirements for relocating NVDIMMs or a set of NVDIMMs when the data must be preserved

- The destination server hardware must match the original server hardware configuration.
- All System Utilities settings in the destination server must match the original System Utilities settings in the original server.
- If NVDIMM-Ns are used with NVDIMM-N Interleaving set to Enabled in the original server, do the following:
  - Install the NVDIMMs in the same DIMM slots in the destination server.
  - Install the entire NVDIMM set (all the NVDIMM-Ns on the processor) on the destination server.

  This guideline would apply when replacing a system board due to system failure.

  If any of the requirements cannot be met during NVDIMM relocation, do the following:

  - Manually back up the NVDIMM-N data before relocating NVDIMM-Ns to another server.
  - Relocate the NVDIMM-Ns to another server.
  - Sanitize all NVDIMM-Ns on the new server before using them.

Requirements for relocating NVDIMMs or a set of NVDIMMs when the data does not have to be preserved

- Move the NVDIMM-Ns to the new location and sanitize all NVDIMM-Ns after installing them to the new location.
- Observe the DIMM and NVDIMM population guidelines.
- Observe the process for removing an NVDIMM.
- Observe the process for installing an NVDIMM.
- Review and configure the system settings for NVDIMMs.

More information

NVDIMM sanitization on page 25
Removing an NVDIMM on page 24
Installing an NVDIMM on page 14
DIMM and NVDIMM population information on page 13
Configuring NVDIMM-N Memory Options on page 18

Balanced and unbalanced NVDIMM configurations

Balancing NVDIMM-Ns by positioning them equally across all processors results in them being presented by the OS device drivers as multiple smaller block devices. With NVDIMM-N Memory Interleaving enabled, one block device exists per processor. For example, eight 8 GiB NVDIMMs on two processors result in two 32 GiB block devices. This works best if storage threads need to run on all processors and can partition their data so threads access local NVDIMM-Ns.

Unbalancing NVDIMM-Ns by positioning them all on one processor results in them being presented as one big block device. For example, eight 8 GiB NVDIMMs on one processor results in one 64 GiB block device. This works best if storage threads can be limited to that processor.

For more information about NVDIMM configurations, see the see the DIMM and NVDIMM population guidelines on the Hewlett Packard Enterprise website (**http://www.hpe.com/docs/memory-population-rules**).

Recovering restored data from an NVDIMM-N DRAM

CAUTION:

Do not remove an NVDIMM when any LEDs on any NVDIMM in the system are illuminated. Removing an NVDIMM when an LED is illuminated might cause a loss of data.

CAUTION:

Electrostatic discharge can damage electronic components. Be sure you are properly grounded before beginning this procedure.

CAUTION:

Failure to properly handle DIMMs can damage the DIMM components and the system board connector. For more information, see the DIMM handling guidelines in the troubleshooting guide for your product on the Hewlett Packard Enterprise website:

- HPE ProLiant Gen10 (**http://www.hpe.com/info/gen10-troubleshooting**)
- HPE Synergy (**http://www.hpe.com/info/synergy-troubleshooting**)

When the NVDIMM-N DRAM contains the only copy of restored data, perform the following procedure to recover the information:

Procedure

1. Copy the data from the NVDIMM to some other storage device (such as SSD, HDD, or another NVDIMM) as soon as possible (before cold reset or power loss).
2. Power down the server.
3. Extend or remove the server.
4. Remove the access panel.
5. Remove all components necessary to access the server DIMM slots and the HPE Smart Storage Battery.

   For more information, see the server maintenance and service guide on the Hewlett Packard Enterprise website (**http://www.hpe.com/info/enterprise-docs**).
6. Observe the NVDIMM LEDs. Do not remove an NVDIMM when any NVDIMM LED in the system is illuminated.
7. Remove the NVDIMM-N.
8. Install a replacement NVDIMM-N.
9. Install any components removed to access the DIMM slots and the HPE Smart Storage Battery.
10. Install the access panel.
11. Install the server in the rack.
12. Power up the server.

13. Sanitize the replacement NVDIMM.
14. Copy the data from the storage device to the NVDIMM-N.

More information

DIMM handling guidelines on page 13
Removing an NVDIMM on page 24
Installing an NVDIMM on page 14
NVDIMM LED identification on page 10
NVDIMM-N Sanitize/Erase on Next Reboot Policy on page 19

NVDIMM-N firmware update

To update NVDIMM-N firmware, use one of the following methods:

- Service Pack for ProLiant (SPP)—See the *Service Pack for ProLiant Quick Start Guide* (**http://www.hpe.com/info/spp/documentation**).

  To download the SPP, see (**http://www.hpe.com/servers/spp/download**).

- HPE online flash components

Troubleshooting

NVDIMM error messages

The system displays NVDIMM error messages during POST and in the IML. These messages can provide a status or indicate an error. Messages that indicate an error also provide an action with the error text. For a full list of the error messages, see the *Error Message Guide for HPE ProLiant Gen10 Servers and HPE Synergy*. For more information, see **Troubleshooting resources** on page 31.

Troubleshooting resources

Troubleshooting resources are available for HPE Gen10 server products in the following documents:

- *Troubleshooting Guide for HPE ProLiant Gen10 servers* provides procedures for resolving common problems and comprehensive courses of action for fault isolation and identification, issue resolution, and software maintenance.
- *Error Message Guide for HPE ProLiant Gen10 servers and HPE Synergy* provides a list of error messages and information to assist with interpreting and resolving error messages.
- *Integrated Management Log Messages and Troubleshooting Guide for HPE ProLiant Gen10 and HPE Synergy* provides IML messages and associated troubleshooting information to resolve critical and cautionary IML events.

To access the troubleshooting resources, see the Hewlett Packard Enterprise Information Library (**http://www.hpe.com/info/gen10-troubleshooting**).

Websites

General websites

Hewlett Packard Enterprise Information Library

www.hpe.com/info/EIL

For additional websites, see **Support and other resources**.

Persistent Memory websites

Hewlett Packard Enterprise Information Library for Persistent Memory

www.hpe.com/info/nvdimm-docs

Persistent Memory

www.hpe.com/info/persistentmemory

Support and other resources

Accessing Hewlett Packard Enterprise Support

- For live assistance, go to the Contact Hewlett Packard Enterprise Worldwide website:

  http://www.hpe.com/assistance

- To access documentation and support services, go to the Hewlett Packard Enterprise Support Center website:

  http://www.hpe.com/support/hpesc

Information to collect

- Technical support registration number (if applicable)
- Product name, model or version, and serial number
- Operating system name and version
- Firmware version
- Error messages
- Product-specific reports and logs
- Add-on products or components
- Third-party products or components

Accessing updates

- Some software products provide a mechanism for accessing software updates through the product interface. Review your product documentation to identify the recommended software update method.
- To download product updates:

  Hewlett Packard Enterprise Support Center

  www.hpe.com/support/hpesc

  Hewlett Packard Enterprise Support Center: Software downloads

  www.hpe.com/support/downloads

  Software Depot

  www.hpe.com/support/softwaredepot

- To subscribe to eNewsletters and alerts:

  www.hpe.com/support/e-updates

- To view and update your entitlements, and to link your contracts and warranties with your profile, go to the Hewlett Packard Enterprise Support Center **More Information on Access to Support Materials** page:

www.hpe.com/support/AccessToSupportMaterials

IMPORTANT:

Access to some updates might require product entitlement when accessed through the Hewlett Packard Enterprise Support Center. You must have an HPE Passport set up with relevant entitlements.

Customer self repair

Hewlett Packard Enterprise customer self repair (CSR) programs allow you to repair your product. If a CSR part needs to be replaced, it will be shipped directly to you so that you can install it at your convenience. Some parts do not qualify for CSR. Your Hewlett Packard Enterprise authorized service provider will determine whether a repair can be accomplished by CSR.

For more information about CSR, contact your local service provider or go to the CSR website:

http://www.hpe.com/support/selfrepair

Remote support

Remote support is available with supported devices as part of your warranty or contractual support agreement. It provides intelligent event diagnosis, and automatic, secure submission of hardware event notifications to Hewlett Packard Enterprise, which will initiate a fast and accurate resolution based on your product's service level. Hewlett Packard Enterprise strongly recommends that you register your device for remote support.

If your product includes additional remote support details, use search to locate that information.

Remote support and Proactive Care information

HPE Get Connected

www.hpe.com/services/getconnected

HPE Proactive Care services

www.hpe.com/services/proactivecare

HPE Proactive Care service: Supported products list

www.hpe.com/services/proactivecaresupportedproducts

HPE Proactive Care advanced service: Supported products list

www.hpe.com/services/proactivecareadvancedsupportedproducts

Proactive Care customer information

Proactive Care central

www.hpe.com/services/proactivecarecentral

Proactive Care service activation

www.hpe.com/services/proactivecarecentralgetstarted

Warranty information

To view the warranty for your product or to view the *Safety and Compliance Information for Server, Storage, Power, Networking, and Rack Products* reference document, go to the Enterprise Safety and Compliance website:

www.hpe.com/support/Safety-Compliance-EnterpriseProducts

Additional warranty information

HPE ProLiant and x86 Servers and Options

www.hpe.com/support/ProLiantServers-Warranties

HPE Enterprise Servers

www.hpe.com/support/EnterpriseServers-Warranties

HPE Storage Products

www.hpe.com/support/Storage-Warranties

HPE Networking Products

www.hpe.com/support/Networking-Warranties

Regulatory information

To view the regulatory information for your product, view the *Safety and Compliance Information for Server, Storage, Power, Networking, and Rack Products*, available at the Hewlett Packard Enterprise Support Center:

www.hpe.com/support/Safety-Compliance-EnterpriseProducts

Additional regulatory information

Hewlett Packard Enterprise is committed to providing our customers with information about the chemical substances in our products as needed to comply with legal requirements such as REACH (Regulation EC No 1907/2006 of the European Parliament and the Council). A chemical information report for this product can be found at:

www.hpe.com/info/reach

For Hewlett Packard Enterprise product environmental and safety information and compliance data, including RoHS and REACH, see:

www.hpe.com/info/ecodata

For Hewlett Packard Enterprise environmental information, including company programs, product recycling, and energy efficiency, see:

www.hpe.com/info/environment

Documentation feedback

Hewlett Packard Enterprise is committed to providing documentation that meets your needs. To help us improve the documentation, send any errors, suggestions, or comments to Documentation Feedback (**docsfeedback@hpe.com**). When submitting your feedback, include the document title, part number, edition, and publication date located on the front cover of the document. For online help content, include the product name, product version, help edition, and publication date located on the legal notices page.

Acronyms and abbreviations

CAS

column address strobe

DDDC

Double Device Data Correction

DDR4

double data rate-4

IEC

International Electrotechnical Commission

LRDIMM

load reduced dual in-line memory module

NAND

Not AND

NIST

National Institute of Standards and Technology

NVDIMM

non-volatile dual in-line memory module

NVDIMM-N

non-volatile dual in-line memory module with byte-addressable interface to DRAM

NVM

non-volatile memory

NVRDIMM

non-volatile registered dual in-line memory module

NVRDIMM-N

non-volatile registered dual in-line memory module with byte-addressable interface to DRAM

POST

Power-On Self-Test

QPI

QuickPath Interconnect

RBSU

ROM-Based Setup Utility

RDIMM

registered dual in-line memory module

SCM

storage class memory

SDK

Software Development Kit

SMH

System Management Homepage

UDIMM

unregistered dual in-line memory module

UEFI

Unified Extensible Firmware Interface