HPE Apollo 4510 Gen10 Chassis Maintenance and Service Guide

Part Number: 20-APL4510-MSG-ED9
Published: March 2022
Edition: 9

HPE Apollo 4510 Gen10 Chassis Maintenance and Service Guide

Abstract
This guide describes identification and maintenance procedures, diagnostic tools, specifications for hardware components, and software for the HPE Apollo 4500 Systems. This guide is for an experienced service technician. Hewlett Packard Enterprise assumes you are qualified in the servicing of computer equipment, trained in recognizing hazards in products, and are familiar with weight and stability precautions.

Part Number: 20-APL4510-MSG-ED9
Published: March 2022
Edition: 9

© Copyright 2017, 2022 Hewlett Packard Enterprise Development LP

Notices

The information contained herein is subject to change without notice. The only warranties for Hewlett Packard Enterprise products and services are set forth in the express warranty statements accompanying such products and services. Nothing herein should be construed as constituting an additional warranty. Hewlett Packard Enterprise shall not be liable for technical or editorial errors or omissions contained herein.

Confidential computer software. Valid license from Hewlett Packard Enterprise required for possession, use, or copying. Consistent with FAR 12.211 and 12.212, Commercial Computer Software, Computer Software Documentation, and Technical Data for Commercial Items are licensed to the U.S. Government under vendor's standard commercial license.

Links to third-party websites take you outside the Hewlett Packard Enterprise website. Hewlett Packard Enterprise has no control over and is not responsible for information outside the Hewlett Packard Enterprise website.

Acknowledgments

Microsoft® and Windows® are either registered trademarks or trademarks of Microsoft Corporation in the United States and/or other countries.

Linux® is the registered trademark of Linus Torvalds in the U.S. and other countries.

Table of contents

Illustrated parts catalog 7
Mechanical components 7
Drive drawer rail spare parts 8
Midplane assembly cover spare parts 8
Fan cage louver spare part 9
Power supply blank spare part 9
4U rack mounting kit spare parts 9
Drive blank spare part 10
Drive drawer cable track spare part 10
Bezel ear spare parts 10
System components 11
Drive drawer assembly with backplane spare part 12
Cable retention bracket spare part 12
Midplane assembly spare parts 13
Management module spare part 13
I/O module spare parts 13
System fan spare parts 14
Power supply spare parts 14
Cable kit spare parts 15
Chassis options 15
LFF drive spare parts 17
HPE Smart Storage Battery spare part 18
Smart Array SAS controllers spare parts 19
Fibre channel controllers spare parts 19
Network controllers spare parts 20
FlexibleLOM adapters spare parts 21
InfiniBand adapters spare parts 21
PCIe accelerators spare parts 22
Smart I/O (Pensando Distributed Services Platform) spare parts 23
HPE NS204i-p NVMe OS Boot Device spare parts 23
Chassis lift handle spare parts 23
Customer self repair 24
Removal and replacement procedures 34
Required tools 34

Preparation procedures....35
Power down the server....35
Power up the server....36
Extend the drive drawer from the chassis....36
Remove the chassis from the rack....37
Install the chassis into the rack....39
Remove the server from the chassis....46
Safety considerations....47
Preventing electrostatic discharge....47
Symbols on equipment....48
System warnings and cautions....49
Removing and replacing the bezel ear....50
Removing and replacing the management module....51
Removing and replacing the I/O module....52
Removing and replacing an expansion board....53
Removing and replacing the HPE NS204i-p NVMe OS Boot Device option....57
Removing and replacing the boot device....57
Removing and replacing a boot device drive....60
Relocating the M.2 drive retaining latches....61
Removing and replacing a power supply....63
Removing and replacing the power supply blank....64
Removing and replacing a drive....65
Removing and replacing the drive blank....67
Removing and replacing the system fan....68
Removing and replacing the HPE Smart Storage Battery....69
Removing a midplane assembly cover....74
Removing and replacing a midplane assembly....76
Removing a midplane assembly....76
Replacing a midplane assembly....78
Removing and replacing a fan louver....81
Removing and replacing the drive drawer assembly....81
Removing and replacing the drive drawer cable track....90
Removing and replacing the chassis lift handles....91
Troubleshooting....92
Troubleshooting resources....92
Diagnostic tools....93
Product QuickSpecs....93
UEFI System Utilities....93

Selecting the boot mode 94
Secure Boot 95
Launching the Embedded UEFI Shell 95
Intelligent Provisioning 96
HPE Insight Remote Support 97
USB support 97
External USB functionality 97
HPE Smart Storage Administrator 97
Identifying components and LEDs 98
Front panel components 98
Drive Drawer LEDs 99
Server front panel components 100
Server front panel LEDs and buttons 101
Rear panel components 103
Power supply LEDs 104
Management module components 105
Management module LEDs 106
I/O module components 107
I/O module LEDs 108
PCIe slot definitions 109
PCIe slot and processor mapping 110
I/O SAS board port identification 111
HPE Smart Array E208i-p SR Gen10 Controller port identification 112
HPE Smart Array P408i-p SR Gen10 Controller port identification 112
HPE Smart Array P824i-p MR Gen10 Controller port identification 113
Controller backup power connectors 114
HPE NS204i-p NVMe OS Boot Device components 115
HPE NS204i-p NVMe OS Boot Device LED definitions 116
LFF drive bay numbering 117
Low-profile LFF drive LED definitions 118
DSC-25 2-port SFP28 card ports and LEDs 120
Cabling 122
Connecting the Management module to the network with the iLO ports 122
Connecting the optional HPE APM module 123
I/O module option cabling 124
HPE Smart Array E208i-p SR Gen10 Controller cabling 125
HPE Smart Array P408i-p SR Gen10 Controller cabling 126
HPE Smart Array P824i-p MR Gen10 Controller cabling 130

HPE Smart Storage Battery cabling....134
Drive drawer cabling....135
Fan cabling....137
Specifications....138
Environmental specifications....138
Chassis specifications....139
Power supply specifications....139
HPE 800 W Flex Slot Platinum Hot-plug Low Halogen Power Supply....139
HPE 800 W Flex Slot -48 VDC Hot-plug Low Halogen Power Supply....140
HPE 800 W Flex Slot Titanium Hot-plug Low Halogen Power Supply....142
HPE 800 W Flex Slot Universal Hot-plug Low Halogen Power Supply....143
HPE 1600 W Flex Slot Platinum Hot-plug Low Halogen Power Supply....144
Hot-plug power supply calculations....145
Support and other resources....145
Accessing Hewlett Packard Enterprise Support....145
Accessing updates....146
Remote support....147
Warranty information....147
Regulatory information....148
Documentation feedback....148

Illustrated parts catalog

Mechanical components

Hewlett Packard Enterprise continually improves and changes product parts. For complete and current supported parts information, see the Hewlett Packard Enterprise PartSurfer website (**http://www.hpe.com/info/partssurfer**).

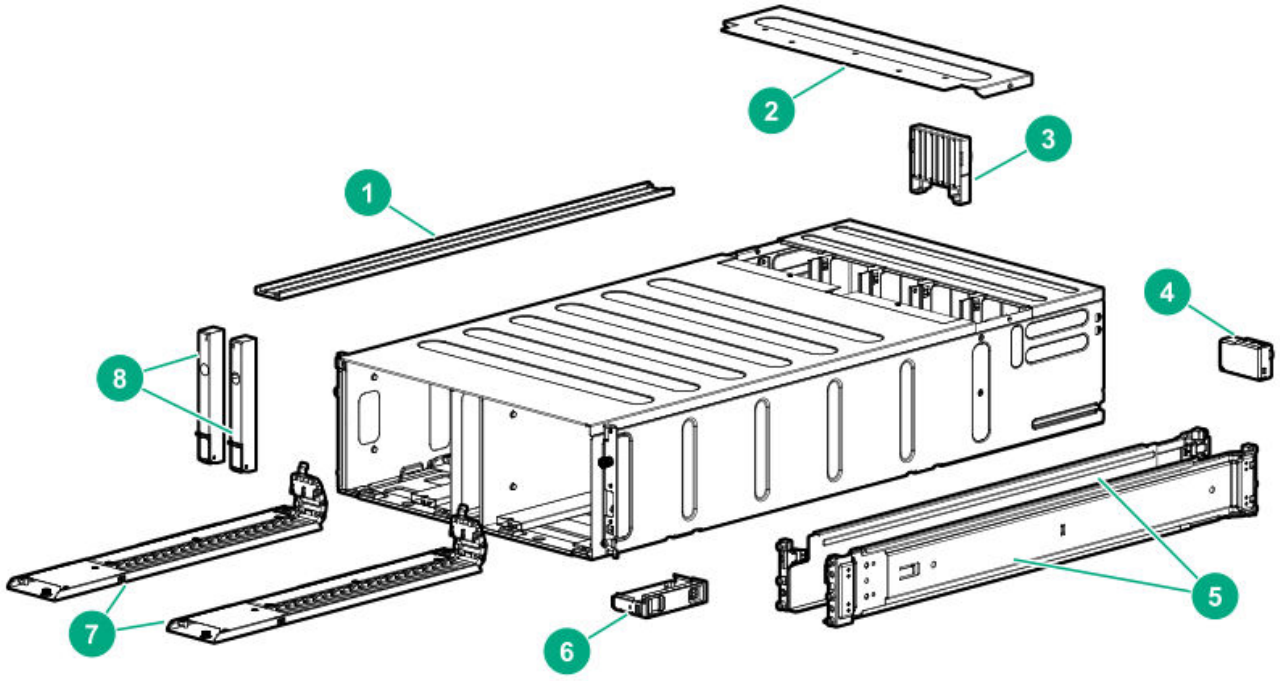

Item	Description
1	Drive drawer rail spare parts
2	Midplane assembly cover spare parts
3	Fan cage louver spare part
4	Power supply blank spare part
5	4U rack mounting kit spare parts

Item	Description
6	Drive blank spare part
7	Drive drawer cable track spare part
8	Bezel ear spare parts

For more information, see Removal and replacement procedures.

Drive drawer rail spare parts

Customer self repair: **Mandatory**

Description	Spare part number
Drive drawer rail without lock out	880986-001
Drive drawer rail with lock out	881539-001

Midplane assembly cover spare parts

Customer self repair: **Mandatory**

Description	Spare part number
Midplane assembly cover	880981-001

Fan cage louver spare part

Customer self repair: **Mandatory**

Description	Spare part number
Fan cage louver	880987-001

Power supply blank spare part

Customer self repair: **Mandatory**

Description	Spare part number
Power supply blank	880982-001

4U rack mounting kit spare parts

Customer self repair: **Mandatory**

Description	Spare part number
4U rack mounting kit	880985-001

Drive blank spare part

Customer self repair: **Mandatory**

Description	Spare part number
LFF drive blank	827363-001

Drive drawer cable track spare part

Customer self repair: **Optional**

Description	Spare part number
Drive drawer cable track, left	880991-001
Drive drawer cable track, right	880992-001

Bezel ear spare parts

Customer self repair: **Mandatory**

Description	Spare part number
Bezel ear, right	880984-001
Bezel ear, left	880983-001

System components

Hewlett Packard Enterprise continually improves and changes product parts. For complete and current supported parts information, see the Hewlett Packard Enterprise PartSurfer website (**http://www.hpe.com/info/partssurfer**).

All processors in this HPE ProLiant server must have the same cache size, speed, number of cores, and rated maximum power consumption.

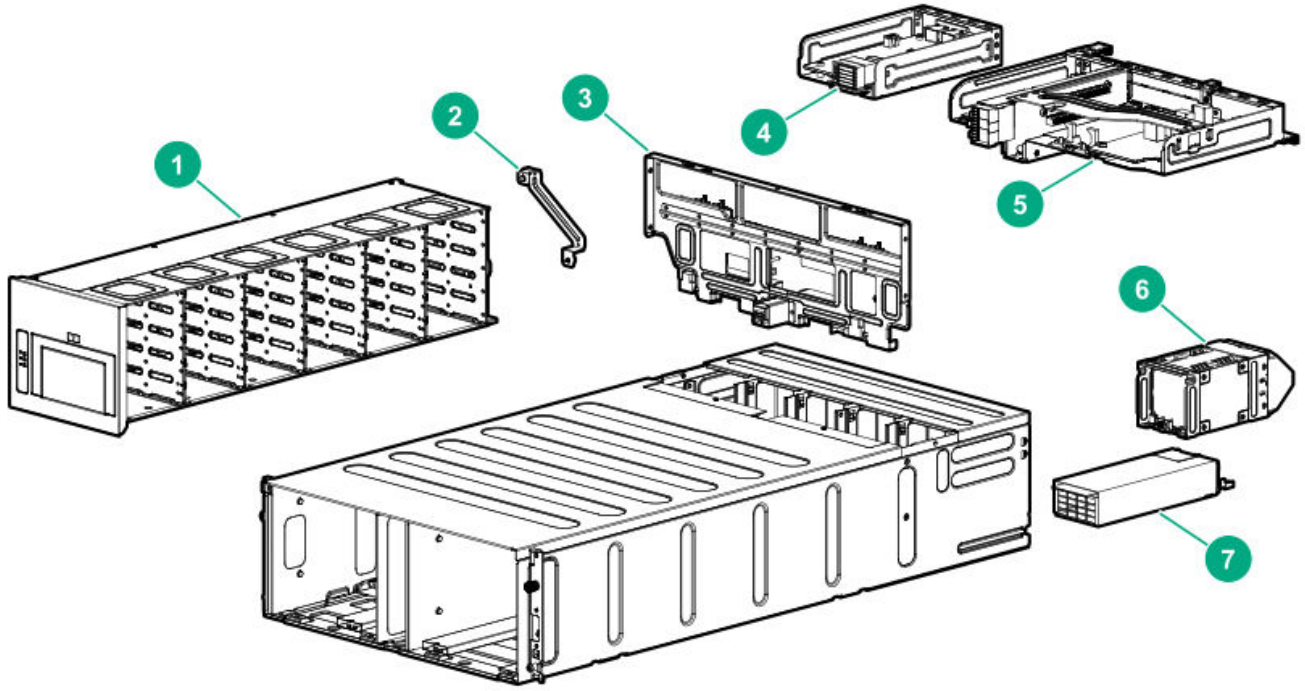

Item	Description
1	Drive drawer assembly with backplane spare part
2	Cable retention bracket spare part
3	Midplane assembly spare parts
4	Management module spare part
5	I/O module spare parts
6	System fan spare parts
7	Power supply spare parts

Item	Description
8	Cable kit spare parts [1]

[1] Not shown

For more information, see Removal and replacement procedures.

Drive drawer assembly with backplane spare part

Customer self repair: **Optional**

Description	Spare part number
Drive drawer assembly with backplane PCA, drawer rails, and cable retention bracket	880988-001

Cable retention bracket spare part

Customer self repair: **Mandatory**

Description	Spare part number
Cable retention bracket	880989-001

Midplane assembly spare parts

Customer self repair: **Optional**

Description	Spare part number
Midplane assembly (1x60)	880990-001

Management module spare part

Customer self repair: **Optional**

Description	Spare part number
Management module	880993-001

I/O module spare parts

Customer self repair: **Optional**

Description	Spare part number
2x/2x I/O module with 332i 1 Gb network adapter	880994-001
3x/1x I/O module with 332i 1 Gb network adapter	P02730-001

System fan spare parts

Customer self repair: **Mandatory**

Description	Spare part number
System fan module	880995-001

Power supply spare parts

Customer self repair: **Mandatory**

Description	Spare part number
HPE 800W Flex Slot -48VDC Hot Plug Low Halogen Power Supply	866728-001
HPE 800W Flex Slot Platinum Hot Plug Low Halogen Power Supply	866730-001
HPE 800W Flex Slot Titanium Hot Plug Low Halogen Power Supply	866793-001
HPE 800W Flex Slot Universal Hot Plug Low Halogen Power Supply	866727-001
HPE 1600W Flex Slot Platinum Hot Plug Low Halogen Power Supply	863373-001

Cable kit spare parts

Customer self repair: **Mandatory**

Description	Spare part number
Fan cable assembly	879509-001
HPE Apollo 4510 E208i-p and P408i-p Mini SAS cable kit: • Mini SAS cable for the HPE Smart Array E208i-p SR Gen10 Controller • Mini SAS cable for the HPE Smart Array P408i-p SR Gen10 Controller	879037-001
HPE Apollo 4510 P824i-p SAS 140 mm cable	P00664-001
HPE Apollo 4510 P824i-p SAS 205 mm cable	P00662-001
HPE Smart Storage cache backup power cable	878646-001

Chassis options

Hewlett Packard Enterprise continually improves and changes product parts. For complete and current supported parts information, see the Hewlett Packard Enterprise PartSurfer website (**http://www.hpe.com/info/partssurfer**).

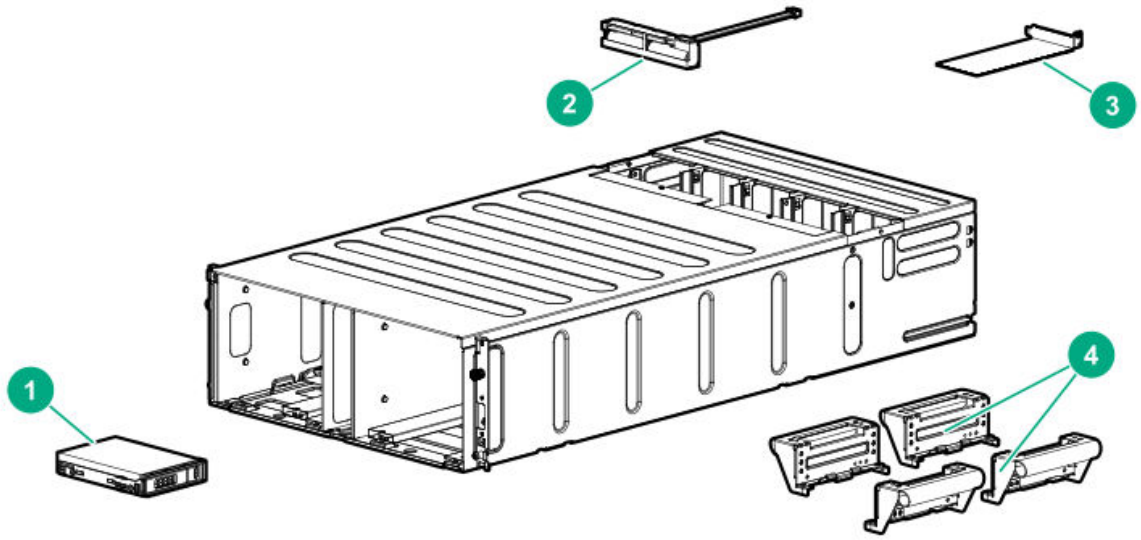

Item	Description
1	LFF drive spare parts
2	HPE Smart Storage Battery spare part
3	Expansion board options spare parts
	Smart Array SAS controllers spare parts
	Fibre channel controllers spare parts
	Network controllers spare parts
	FlexibleLOM adapters spare parts
	InfiniBand adapters spare parts
	PCIe accelerators spare parts
	Smart network adapter spare parts
	HPE NS204i-p NVMe OS Boot Device spare parts
4	Chassis lift handle spare parts

For more information, see Removal and replacement procedures.

LFF drive spare parts

Customer self repair: **Mandatory**

SATA drives

Description	Spare part number
HPE 240 GB SATA RI LFF LPC DS SSD	878844-001
HPE 480 GB SATA RI LFF LPC DS SSD	878848-001
HPE 480 GB SATA MU LFF LPC DS SSD	879015-001
HPE 960 GB SATA RI LFF LPC DS SSD	878851-001
HPE 960 GB SATA MU LFF LPC DS SSD	879018-001
HPE 1 TB SATA 7.2K LFF LP DS HDD	862130-001
HPE 1.6 TB SATA RI LFF LPC SSD	841481-001
HPE 1.92 TB SATA RI LFF LPC DS SSD	878854-001
HPE 1.92 TB SATA MU LFF LPC DS SSD	879021-001
HPE 2 TB SATA 7.2K LFF LP DS HDD	862132-001
HPE 3 TB SATA 7.2K LFF LP DS HDD	862131-001
HPE 3.84 TB SATA RI LFF LPC DS SSD	878857-001
HPE 4 TB SATA 7.2K LFF LP DS HDD	862133-001
HPE 4 TB SATA 7.2K LFF LP 512e DS HDD	862135-001
HPE 6 TB SATA 7.2K LFF LP HDD	797521-001
HPE 6 TB SATA 7.2K LFF LP DS HDD	846609-001
HPE 6 TB SATA 7.2K LFF LP 512e DS HDD	862134-001
HPE 8 TB SATA 7.2K LFF LP 512e DS HDD	834131-001
HPE 8 TB SATA 7.2K LFF LP He 512e DS HDD	861610-001
HPE 10 TB SATA 7.2K LFF LP He 512e DS HDD	857968-001

SAS drives

Description	Spare part number
HPE 300 GB SAS 15K LFF LPC DS HDD	870793-001

Description	Spare part number
HPE 400 GB SAS 12G WI LFF LPC DS SSD	873568-001
HPE 400 GB SAS 12G MU LFF LPC DS SSD	873567-001
HPE 800 GB SAS 12G MU LFF LPC DS SSD	872508-001
HPE 900 GB SAS 15K LFF LPC DS HDD	870796-001
HPE 960 GB SAS RI LFF LPC DS SSD	875683-001
HPE 1 TB SAS 7.2K LFF LP DS HDD	846613-001
HPE 1.6 TB SAS 12G MU LFF LPC DS SSD	872510-001
HPE 1.92 TB SAS RI LFF LPC DS SSD	875685-001
HPE 2 TB SAS 7.2K LFF LP DS HDD	834133-001
HPE 3 TB SAS 7.2K LFF LP DS HDD	846615-001
HPE 3.84 TB SAS RI LFF LPC DS SSD	875687-001
HPE 4 TB SAS 7.2K LFF LP 512e HDD	862137-001
HPE 4 TB SAS 7.2K LFF LP DS HDD	834134-001
HPE 6 TB SAS 7.2K LFF LP 512e HDD	862136-001
HPE 6 TB SAS 7.2K LFF LP DS HDD	846611-001
HPE 7.68 TB SAS 12G RI LFF-LPc DS SSD	870461-001
HPE 8 TB SAS 7.2K LFF LP He 512e DS HDD	861608-001
HPE 8 TB SAS 7.2K LFF LP 512e DS HDD	834132-001
HPE 10 TB SAS 7.2K LFF LP He 512e DS HDD	857966-001

HPE Smart Storage Battery spare part

Customer self repair: **Mandatory**

Description	Spare part number
HPE Smart Storage battery	878643-001

Smart Array SAS controllers spare parts

Customer self repair: **Mandatory**

Description	Spare part number
HPE Smart Array E208i-a SR Gen10 Controller	836259-001
HPE Smart Array P408i-a SR Gen10 Controller	836260-001
HPE Smart Array E208i-p SR Gen10 Controller	836266-001
HPE Smart Array E208e-p SR Gen10 Controller	836267-001
HPE Smart Array P408e-p SR Gen10 Controller	836270-001
HPE Smart Array P408i-p SR Gen10 Controller	836269-001
HPE Smart Array P824i-p MR Gen10 Controller	871043-001

Fibre channel controllers spare parts

Customer self repair: **Mandatory**

Description	Spare part number
HPE StoreFabric CN1200E 10Gb Converged Network Adapter	767078-001
HPE StoreFabric CN1200E-T 10Gb Converged Network Adapter	827607-001
HPE StoreFabric CN1100R-T 10Gb Converged Network Adapter	827605-001
HPE CN1100R 2P Converged Network Adapter	706801-001
HPE SN1100Q 16Gb 1p FC Host Bus Adapter	853010-001
HPE SN1100Q 16Gb 2p FC Host Bus Adapter	853011-001

Description	Spare part number
HPE SN1600Q 32Gb 1p FC Host Bus Adapter	868140-001
HPE SN1600E 32Gb 1p FC Host Bus Adapter	869999-001
HPE SN1600E 32Gb 2p FC Host Bus Adapter	870000-001
HPE SN1200E 16Gb 1p FC Host Bus Adapter	870001-001
HPE SN1200E 16Gb 2p FC Host Bus Adapter	870002-001

Network controllers spare parts

Customer self repair: **Mandatory**

Description	Spare part number
HPE Ethernet 1Gb 2P 332T Adapter	616012-001
HPE Ethernet 1Gb 4-port 331T Adapter	649871-001
HPE Ethernet 1Gb 2P 361T Adapter	656241-002
HPE Ethernet 10Gb 2P 530SFP+ Adapter	656244-001
HPE Ethernet 10Gb 2P 530T Adapter	657128-001
HPE Ethernet 10Gb 2-port 562SFP+ Adapter	790316-001
HPE Ethernet 1Gb 4-port 366T Adapter	816551-001
HPE Ethernet 10/25Gb 2P 640SFP28 Adapter	840140-001
HPE Ethernet 4x25Gb 1p 620QSFP28 Adapter	840134-001
HPE Ethernet 10Gb 2p 535T Adapter	815669-001
HPE Ethernet 10/25Gb 2p 631SFP28 Adapter	840130-001
HPE Ethernet 10Gb 2p 562T Adapter	840137-001
HPE Ethernet 10/25Gb 2p 621SFP28 Adapter	869570-001
HPE Ethernet 10Gb 2p 521T Adapter	869573-001

FlexibleLOM adapters spare parts

Customer self repair: **Mandatory**

Description	Spare part number
HPE IB FDR/EN 40Gb 2P 544+FLR-QSFP Adapter	764737-001
HPE Ethernet 1Gb 4P 331FLR Adapter	789897-001
HPE Ethernet 1Gb 4-port 366FLR Adapter	669280-001
HPE FlexFabric 10Gb 2P 534FLR-SFP+ Adapter	701531-001
HPE FlexFabric 10Gb 2P 533FLR-T Adapter	701534-001
HPE Ethernet 10Gb 2-port 562FLR-SFP+Adapter	790317-001
HPE FlexFabric 10Gb 4P 536FLR-T Adapter	768082-001
HPE Ethernet 10/25Gb 2P 640FLR-SFP28 Adapter	840139-001
HPE Ethernet 10/25Gb 2p 631FLR-SFP28 Adapter	840133-001
HPE Ethernet 10Gb 2p 535FLR-T Adapter	854177-001
HPE Ethernet 10Gb 2p 562FLR-T Adapter	840138-001
HPE Ethernet 10Gb 2p 522FLR-T Converged Network Adapter	869571-001
HPE Ethernet 10/25Gb 2p 622FLR-SFP28 Converged Network Adapter	869572-001

InfiniBand adapters spare parts

Customer self repair: **Mandatory**

Description	Spare part number
HPE IB EDR 100Gb 1p 841QSFP28 adapter	878578-001

Description	Spare part number
InfiniBand Fourteen Data Rate (FDR)/Ethernet 10Gb/40Gb two port 544+ Quad Small Form-factor Pluggable (QSFP) adapter	764736-001
840 Quad Small Form-factor Pluggable (QSFP28) 100GB adapter - InfiniBand (IB), Enhanced Data Rate/Ethernet (EDR/EN), one port	828107-001
840 Quad Small Form-factor Pluggable (QSFP28) 100GB adapter - InfiniBand (IB), Enhanced Data Rate/Ethernet (EDR/EN), two ports	828108-001
100Gb one port OP101 Quad Small Form-factor Pluggable (QSFP28) - x8 PCIe Gen3 with Intel Omni-Path architecture adapter	841702-001
Omni-Path Adapter 1x Quad Small Form-factor Pluggable 28 (QSFP28) - Low-profile PCIe Gen3 x1	841703-001

PCIe accelerators spare parts

Customer self repair: **Mandatory**

Description	Spare part number
HPE 800 GB PCIe x4 WI HH Card	804566-001
HPE 800 GB PCIe x4 MU HH Card	804568-001
HPE 1.6 TB PCIe x4 WI HH Card	804567-001
HPE 1.6 TB PCIe x4 MU HH Card	804569-001
HPE 2.0 TB PCIe x4 MU HH Card	804570-001

Smart I/O (Pensando Distributed Services Platform) spare parts

Customer self repair: **Optional**

Description	Spare part number
Pensando Distributed Services Platform DSC-25 10/25G 2-port SFP28 card [1]	P27682-001

[1] To use with the accompanying Pensando DSP iLO Sideband ALOM Module, the Smart I/O card must be installed on slot 1 of the primary riser.

HPE NS204i-p NVMe OS Boot Device spare parts

Customer self repair: **Mandatory**

Description	Spare part number
HPE NS204i-p NVMe OS Boot Device	P14379-001
480 GB NVMe x4 RI M.2 22110 DS SSD	P24886-001

Chassis lift handle spare parts

Customer self repair: **Optional**

Description	Spare part number
Chassis lift handles (4)	768486-001

Customer self repair

Hewlett Packard Enterprise products are designed with many Customer Self Repair (CSR) parts to minimize repair time and allow for greater flexibility in performing defective parts replacement. If during the diagnosis period Hewlett Packard Enterprise (or Hewlett Packard Enterprise service providers or service partners) identifies that the repair can be accomplished by the use of a CSR part, Hewlett Packard Enterprise will ship that part directly to you for replacement. There are two categories of CSR parts:

- **Mandatory**—Parts for which customer self repair is mandatory. If you request Hewlett Packard Enterprise to replace these parts, you will be charged for the travel and labor costs of this service.
- **Optional**—Parts for which customer self repair is optional. These parts are also designed for customer self repair. If, however, you require that Hewlett Packard Enterprise replace them for you, there may or may not be additional charges, depending on the type of warranty service designated for your product.

NOTE: Some Hewlett Packard Enterprise parts are not designed for customer self repair. In order to satisfy the customer warranty, Hewlett Packard Enterprise requires that an authorized service provider replace the part. These parts are identified as "No" in the Illustrated Parts Catalog.

Based on availability and where geography permits, CSR parts will be shipped for next business day delivery. Same day or four-hour delivery may be offered at an additional charge where geography permits. If assistance is required, you can call the Hewlett Packard Enterprise Support Center and a technician will help you over the telephone. Hewlett Packard Enterprise specifies in the materials shipped with a replacement CSR part whether a defective part must be returned to Hewlett Packard Enterprise. In cases where it is required to return the defective part to Hewlett Packard Enterprise, you must ship the defective part back to Hewlett Packard Enterprise within a defined period of time, normally five (5) business days. The defective part must be returned with the associated documentation in the provided shipping material. Failure to return the defective part may result in Hewlett Packard Enterprise billing you for the replacement. With a customer self repair, Hewlett Packard Enterprise will pay all shipping and part return costs and determine the courier/carrier to be used.

For more information about the Hewlett Packard Enterprise CSR program, contact your local service provider.

Parts only warranty service

Your Hewlett Packard Enterprise Limited Warranty may include a parts only warranty service. Under the terms of parts only warranty service, Hewlett Packard Enterprise will provide replacement parts free of charge.

For parts only warranty service, CSR part replacement is mandatory. If you request Hewlett Packard Enterprise to replace these parts, you will be charged for the travel and labor costs of this service.

Réparation par le client (CSR)

Les produits Hewlett Packard Enterprise comportent de nombreuses pièces CSR (Customer Self Repair = réparation par le client) afin de minimiser les délais de réparation et faciliter le remplacement des pièces défectueuses. Si pendant la période de diagnostic, Hewlett Packard Enterprise (ou ses partenaires ou mainteneurs agréés) détermine que la réparation peut être effectuée à l'aide d'une pièce CSR, Hewlett Packard Enterprise vous l'envoie directement. Il existe deux catégories de pièces CSR :

- **Obligatoire—**Pièces pour lesquelles la réparation par le client est obligatoire. Si vous demandez à Hewlett Packard Enterprise de remplacer ces pièces, les coûts de déplacement et main d'œuvre du service vous seront facturés.
- **Facultatif—**Pièces pour lesquelles la réparation par le client est facultative. Ces pièces sont également conçues pour permettre au client d'effectuer lui-même la réparation. Toutefois, si vous demandez à Hewlett Packard Enterprise de remplacer ces pièces, l'intervention peut ou non vous être facturée, selon le type de garantie applicable à votre produit.

REMARQUE: Certaines pièces Hewlett Packard Enterprise ne sont pas conçues pour permettre au client d'effectuer lui-même la réparation. Pour que la garantie puisse s'appliquer, Hewlett Packard Enterprise exige que le remplacement de la pièce soit effectué par un Mainteneur Agréé. Ces pièces sont identifiées par la mention "Non" dans le Catalogue illustré.

Les pièces CSR sont livrées le jour ouvré suivant, dans la limite des stocks disponibles et selon votre situation géographique. Si votre situation géographique le permet et que vous demandez une livraison le jour même ou dans les 4 heures, celle-ci vous sera facturée. Pour toute assistance, appelez le Centre d’assistance Hewlett Packard Enterprise pour qu’un technicien vous aide au téléphone Dans les documents envoyés avec la pièce de rechange CSR, Hewlett Packard Enterprise précise s'il est nécessaire de lui retourner la pièce défectueuse. Si c'est le cas, vous devez le faire dans le délai indiqué, généralement cinq (5) jours ouvrés. La pièce et sa documentation doivent être retournées dans l'emballage fourni. Si vous ne retournez pas la pièce défectueuse, Hewlett Packard Enterprise se réserve le droit de vous facturer les coûts de remplacement. Dans le cas d'une pièce CSR, Hewlett Packard Enterprise supporte l'ensemble des frais d'expédition et de retour, et détermine la société de courses ou le transporteur à utiliser.

Pour plus d'informations sur le programme CSR de Hewlett Packard Enterprise, contactez votre Mainteneur Agrée local.

Service de garantie "pièces seules"

Votre garantie limitée Hewlett Packard Enterprise peut inclure un service de garantie "pièces seules". Dans ce cas, les pièces de rechange fournies par Hewlett Packard Enterprise ne sont pas facturées.

Dans le cadre de ce service, la réparation des pièces CSR par le client est obligatoire. Si vous demandez à Hewlett Packard Enterprise de remplacer ces pièces, les coûts de déplacement et main d'œuvre du service vous seront facturés.

Riparazione da parte del cliente

Per abbreviare i tempi di riparazione e garantire una maggiore flessibilità nella sostituzione di parti difettose, i prodotti Hewlett Packard Enterprise sono realizzati con numerosi componenti che possono essere riparati direttamente dal cliente (CSR, Customer Self Repair). Se in fase di diagnostica Hewlett Packard Enterprise (o un centro di servizi o di assistenza Hewlett Packard Enterprise) identifica il guasto come riparabile mediante un ricambio CSR, Hewlett Packard Enterprise lo spedirà direttamente al cliente per la sostituzione. Vi sono due categorie di parti CSR:

- **Obbligatorie—**Parti che devono essere necessariamente riparate dal cliente. Se il cliente ne affida la riparazione ad Hewlett Packard Enterprise, deve sostenere le spese di spedizione e di manodopera per il servizio.
- **Opzionali—**Parti la cui riparazione da parte del cliente è facoltativa. Si tratta comunque di componenti progettati per questo scopo. Se tuttavia il cliente ne richiede la sostituzione ad Hewlett Packard Enterprise, potrebbe dover sostenere spese addizionali a seconda del tipo di garanzia previsto per il prodotto.

NOTA: alcuni componenti Hewlett Packard Enterprise non sono progettati per la riparazione da parte del cliente. Per rispettare la garanzia, Hewlett Packard Enterprise richiede che queste parti siano sostituite da un centro di assistenza autorizzato. Tali parti sono identificate da un "No" nel Catalogo illustrato dei componenti.

In base alla disponibilità e alla località geografica, le parti CSR vengono spedite con consegna entro il giorno lavorativo seguente. La consegna nel giorno stesso o entro quattro ore è offerta con un supplemento di costo solo in alcune zone. In caso di necessità si può richiedere l'assistenza telefonica di un addetto del centro di supporto tecnico Hewlett Packard Enterprise. Nel materiale fornito con una parte di ricambio CSR, Hewlett Packard Enterprise specifica se il cliente deve restituire dei component. Qualora sia richiesta la resa ad Hewlett Packard Enterprise del componente difettoso, lo si deve spedire ad Hewlett Packard Enterprise entro un determinato periodo di tempo, generalmente cinque (5) giorni lavorativi. Il componente difettoso deve essere restituito con la documentazione associata nell'imballo di spedizione fornito. La mancata restituzione del componente può comportare la fatturazione del ricambio da parte di Hewlett Packard Enterprise. Nel caso di riparazione da parte del cliente, Hewlett Packard Enterprise sostiene tutte le spese di spedizione e resa e sceglie il corriere/vettore da utilizzare.

Per ulteriori informazioni sul programma CSR di Hewlett Packard Enterprise, contattare il centro di assistenza di zona.

Servizio di garanzia per i soli componenti

La garanzia limitata Hewlett Packard Enterprise può includere un servizio di garanzia per i soli componenti. Nei termini di garanzia del servizio per i soli componenti, Hewlett Packard Enterprise fornirà gratuitamente le parti di ricambio.

Per il servizio di garanzia per i soli componenti è obbligatoria la formula CSR che prevede la riparazione da parte del cliente. Se il cliente invece richiede la sostituzione ad Hewlett Packard Enterprise dovrà sostenere le spese di spedizione e di manodopera per il servizio.

Customer Self Repair

Hewlett Packard Enterprise Produkte enthalten viele CSR-Teile (Customer Self Repair), um Reparaturzeiten zu minimieren und höhere Flexibilität beim Austausch defekter Bauteile zu ermöglichen. Wenn Hewlett Packard Enterprise (oder ein Hewlett Packard Enterprise Servicepartner) bei der Diagnose feststellt, dass das Produkt mithilfe eines CSR-Teils repariert werden kann, sendet Ihnen Hewlett Packard Enterprise dieses Bauteil zum Austausch direkt zu. CSR-Teile werden in zwei Kategorien unterteilt:

- **Zwingend**—Teile, für die das Customer Self Repair-Verfahren zwingend vorgegeben ist. Wenn Sie den Austausch dieser Teile von Hewlett Packard Enterprise vornehmen lassen, werden Ihnen die Anfahrt- und Arbeitskosten für diesen Service berechnet.
- **Optional**—Teile, für die das Customer Self Repair-Verfahren optional ist. Diese Teile sind auch für Customer Self Repair ausgelegt. Wenn Sie jedoch den Austausch dieser Teile von Hewlett Packard Enterprise vornehmen lassen möchten, können bei diesem Service je nach den für Ihr Produkt vorgesehenen Garantiebedingungen zusätzliche Kosten anfallen.

HINWEIS: Einige Hewlett Packard Enterprise Teile sind nicht für Customer Self Repair ausgelegt. Um den Garantieanspruch des Kunden zu erfüllen, muss das Teil von einem Hewlett Packard Enterprise Servicepartner ersetzt werden. Im illustrierten Teilekatalog sind diese Teile mit „No“ bzw. „Nein“ gekennzeichnet.

CSR-Teile werden abhängig von der Verfügbarkeit und vom Lieferziel am folgenden Geschäftstag geliefert. Für bestimmte Standorte ist eine Lieferung am selben Tag oder innerhalb von vier Stunden gegen einen Aufpreis verfügbar. Wenn Sie Hilfe benötigen, können Sie das Hewlett Packard Enterprise Support Center anrufen und sich von einem Mitarbeiter per Telefon helfen lassen. Den Materialien von Hewlett Packard Enterprise, die mit einem CSR-Ersatzteil geliefert werden, können Sie entnehmen, ob das defekte Teil an Hewlett Packard Enterprise zurückgeschickt werden muss. Wenn es erforderlich ist, das defekte Teil an Hewlett Packard Enterprise zurückzuschicken, müssen Sie dies innerhalb eines vorgegebenen Zeitraums tun, in der Regel innerhalb von fünf (5) Geschäftstagen. Das defekte Teil muss mit der zugehörigen Dokumentation in der Verpackung zurückgeschickt werden, die im Lieferumfang enthalten ist. Wenn Sie das defekte Teil nicht zurückschicken, kann Hewlett Packard Enterprise Ihnen das Ersatzteil in Rechnung stellen. Im Falle von Customer Self Repair kommt Hewlett Packard Enterprise für alle Kosten für die Lieferung und Rücksendung auf und bestimmt den Kurier-/Frachtdienst.

Weitere Informationen über das Hewlett Packard Enterprise Customer Self Repair Programm erhalten Sie von Ihrem Servicepartner vor Ort.

Parts-only Warranty Service (Garantieservice ausschließlich für Teile)

Ihre Hewlett Packard Enterprise Garantie umfasst möglicherweise einen Parts-only Warranty Service (Garantieservice ausschließlich für Teile). Gemäß den Bestimmungen des Parts-only Warranty Service stellt Hewlett Packard Enterprise Ersatzteile kostenlos zur Verfügung.

Für den Parts-only Warranty Service ist das CSR-Verfahren zwingend vorgegeben. Wenn Sie den Austausch dieser Teile von Hewlett Packard Enterprise vornehmen lassen, werden Ihnen die Anfahrt- und Arbeitskosten für diesen Service berechnet.

Reparaciones del propio cliente

Los productos de Hewlett Packard Enterprise incluyen muchos componentes que el propio usuario puede reemplazar (Customer Self Repair, CSR) para minimizar el tiempo de reparación y ofrecer una mayor flexibilidad a la hora de realizar sustituciones de componentes defectuosos. Si, durante la fase de diagnóstico, Hewlett Packard Enterprise (o los proveedores o socios de servicio de Hewlett Packard Enterprise) identifica que una reparación puede llevarse a cabo mediante el uso de un componente CSR, Hewlett Packard Enterprise le enviará dicho componente directamente para que realice su sustitución. Los componentes CSR se clasifican en dos categorías:

- **Obligatorio**—Componentes cuya reparación por parte del usuario es obligatoria. Si solicita a Hewlett Packard Enterprise que realice la sustitución de estos componentes, tendrá que hacerse cargo de los gastos de desplazamiento y de mano de obra de dicho servicio.
- **Opcional**—Componentes cuya reparación por parte del usuario es opcional. Estos componentes también están diseñados para que puedan ser reparados por el usuario. Sin embargo, si precisa que Hewlett Packard Enterprise realice su sustitución, puede o no conllevar costes adicionales, dependiendo del tipo de servicio de garantía correspondiente al producto.

NOTA: Algunos componentes de Hewlett Packard Enterprise no están diseñados para que puedan ser reparados por el usuario. Para que el usuario haga valer su garantía, Hewlett Packard Enterprise pone como condición que un proveedor de servicios autorizado realice la sustitución de estos componentes. Dichos componentes se identifican con la palabra "No" en el catálogo ilustrado de componentes.

Según la disponibilidad y la situación geográfica, los componentes CSR se enviarán para que lleguen a su destino al siguiente día laborable. Si la situación geográfica lo permite, se puede solicitar la entrega en el mismo día o en cuatro horas con un coste adicional. Si precisa asistencia técnica, puede llamar al Centro de asistencia técnica de Hewlett Packard Enterprise y recibirá ayuda telefónica por parte de un técnico. Con el envío de materiales para la sustitución de componentes CSR, Hewlett Packard Enterprise especificará si los componentes defectuosos deberán devolverse a Hewlett Packard Enterprise. En aquellos casos en los que sea necesario devolver algún componente a Hewlett Packard Enterprise, deberá hacerlo en el periodo de tiempo especificado, normalmente cinco días laborables. Los componentes defectuosos deberán devolverse con toda la documentación relacionada y con el embalaje de envío. Si no enviara el componente defectuoso requerido, Hewlett Packard Enterprise podrá cobrarle por el de sustitución. En el caso de todas sustituciones que lleve a cabo el cliente, Hewlett Packard Enterprise se hará cargo de todos los gastos de envío y devolución de componentes y escogerá la empresa de transporte que se utilice para dicho servicio.

Para obtener más información acerca del programa de Reparaciones del propio cliente de Hewlett Packard Enterprise, póngase en contacto con su proveedor de servicios local.

Servicio de garantía exclusivo de componentes

La garantía limitada de Hewlett Packard Enterprise puede que incluya un servicio de garantía exclusivo de componentes. Según las condiciones de este servicio exclusivo de componentes, Hewlett Packard Enterprise le facilitará los componentes de repuesto sin cargo adicional alguno.

Para este servicio de garantía exclusivo de componentes, es obligatoria la sustitución de componentes por parte del usuario (CSR). Si solicita a Hewlett Packard Enterprise que realice la sustitución de estos componentes, tendrá que hacerse cargo de los gastos de desplazamiento y de mano de obra de dicho servicio.

Customer Self Repair

Veel onderdelen in Hewlett Packard Enterprise producten zijn door de klant zelf te repareren, waardoor de reparatieduur tot een minimum beperkt kan blijven en de flexibiliteit in het vervangen van defecte onderdelen groter is. Deze onderdelen worden CSR-onderdelen (Customer Self Repair) genoemd. Als Hewlett Packard Enterprise (of een Hewlett Packard Enterprise Service Partner) bij de diagnose vaststelt dat de reparatie kan worden uitgevoerd met een CSR-onderdeel, verzendt Hewlett Packard Enterprise dat onderdeel rechtstreeks naar u, zodat u het defecte onderdeel daarmee kunt vervangen. Er zijn twee categorieën CSR-onderdelen:

- **Verplicht**—Onderdelen waarvoor reparatie door de klant verplicht is. Als u Hewlett Packard Enterprise verzoekt deze onderdelen voor u te vervangen, worden u voor deze service reiskosten en arbeidsloon in rekening gebracht.
- **Optioneel**—Onderdelen waarvoor reparatie door de klant optioneel is. Ook deze onderdelen zijn ontworpen voor reparatie door de klant. Als u echter Hewlett Packard Enterprise verzoekt deze onderdelen voor u te vervangen, kunnen daarvoor extra kosten in rekening worden gebracht, afhankelijk van het type garantieservice voor het product.

OPMERKING: Sommige Hewlett Packard Enterprise onderdelen zijn niet ontwikkeld voor reparatie door de klant. In verband met de garantievoorwaarden moet het onderdeel door een geautoriseerde Service Partner worden vervangen. Deze onderdelen worden in de geïllustreerde onderdelencatalogus aangemerkt met "Nee".

Afhankelijk van de leverbaarheid en de locatie worden CSR-onderdelen verzonden voor levering op de eerstvolgende werkdag. Levering op dezelfde dag of binnen vier uur kan tegen meerkosten worden aangeboden, indien dit mogelijk is gezien de locatie. Indien assistentie is gewenst, belt u het Hewlett Packard Enterprise Support Center om via de telefoon ondersteuning van een technicus te ontvangen. Hewlett Packard Enterprise vermeldt in de documentatie bij het vervangende CSR-onderdeel of het defecte onderdeel aan Hewlett Packard Enterprise moet worden geretourneerd. Als het defecte onderdeel aan Hewlett Packard Enterprise moet worden teruggezonden, moet u het defecte onderdeel binnen een bepaalde periode, gewoonlijk vijf (5) werkdagen, retourneren aan Hewlett Packard Enterprise. Het defecte onderdeel moet met de bijbehorende documentatie worden geretourneerd in het meegeleverde verpakkingsmateriaal. Als u het defecte onderdeel niet terugzendt, kan Hewlett Packard Enterprise u voor het vervangende onderdeel kosten in rekening brengen. Bij reparatie door de klant betaalt Hewlett Packard

Enterprise alle verzendkosten voor het vervangende en geretourneerde onderdeel en kiest Hewlett Packard Enterprise zelf welke koerier/transportonderneming hiervoor wordt gebruikt.

Neem contact op met een Service Partner voor meer informatie over het Customer Self Repair programma van Hewlett Packard Enterprise.

Garantieservice "Parts Only"

Het is mogelijk dat de Hewlett Packard Enterprise garantie alleen de garantieservice "Parts Only" omvat. Volgens de bepalingen van de Parts Only garantieservice zal Hewlett Packard Enterprise kosteloos vervangende onderdelen ter beschikking stellen.

Voor de Parts Only garantieservice is vervanging door CSR-onderdelen verplicht. Als u Hewlett Packard Enterprise verzoekt deze onderdelen voor u te vervangen, worden u voor deze service reiskosten en arbeidsloon in rekening gebracht

Reparo feito pelo cliente

Os produtos da Hewlett Packard Enterprise são projetados com muitas peças para reparo feito pelo cliente (CSR) de modo a minimizar o tempo de reparo e permitir maior flexibilidade na substituição de peças com defeito. Se, durante o período de diagnóstico, a Hewlett Packard Enterprise (ou fornecedores/parceiros da Hewlett Packard Enterprise) concluir que o reparo pode ser efetuado pelo uso de uma peça CSR, a Hewlett Packard Enterprise enviará a peça diretamente ao cliente. Há duas categorias de peças CSR:

- **Obrigatória**—Peças cujo reparo feito pelo cliente é obrigatório. Se desejar que a Hewlett Packard Enterprise substitua essas peças, serão cobradas as despesas de transporte e mão-de-obra do serviço.
- **Opcional**—Peças cujo reparo feito pelo cliente é opcional. Essas peças também são projetadas para o reparo feito pelo cliente. No entanto, se desejar que a Hewlett Packard Enterprise as substitua, pode haver ou não a cobrança de taxa adicional, dependendo do tipo de serviço de garantia destinado ao produto.

OBSERVAÇÃO: Algumas peças da Hewlett Packard Enterprise não são projetadas para o reparo feito pelo cliente. A fim de cumprir a garantia do cliente, a Hewlett Packard Enterprise exige que um técnico autorizado substitua a peça. Essas peças estão identificadas com a marca "No" (Não), no catálogo de peças ilustrado.

Conforme a disponibilidade e o local geográfico, as peças CSR serão enviadas no primeiro dia útil após o pedido. Onde as condições geográficas permitirem, a entrega no mesmo dia ou em quatro horas pode ser feita mediante uma taxa adicional. Se precisar de auxílio, entre em contato com o Centro de suporte técnico da Hewlett Packard Enterprise para que um técnico o ajude por telefone. A Hewlett Packard Enterprise especifica nos materiais fornecidos com a peça CSR de reposição se a peça com defeito deve ser devolvida à Hewlett Packard Enterprise. Nos casos em que isso for necessário, é preciso enviar a peça com defeito à Hewlett Packard Enterprise, você deverá enviar a peça com defeito de volta para a Hewlett Packard Enterprise dentro do período de tempo definido, normalmente em 5 (cinco) dias úteis. A peça com defeito deve ser enviada com a documentação correspondente no material de transporte fornecido. Caso não o faça, a Hewlett Packard Enterprise poderá cobrar a reposição. Para as peças de reparo feito pelo cliente, a Hewlett Packard Enterprise paga todas as despesas de transporte e de devolução da peça e determina a transportadora/serviço postal a ser utilizado.

Para obter mais informações sobre o programa de reparo feito pelo cliente da Hewlett Packard Enterprise, entre em contato com o fornecedor de serviços local.

Serviço de garantia apenas para peças

A garantia limitada da Hewlett Packard Enterprise pode incluir um serviço de garantia apenas para peças. Segundo os termos do serviço de garantia apenas para peças, a Hewlett Packard Enterprise fornece as peças de reposição sem cobrar nenhuma taxa.

No caso desse serviço, a substituição de peças CSR é obrigatória. Se desejar que a Hewlett Packard Enterprise substitua essas peças, serão cobradas as despesas de transporte e mão-de-obra do serviço.

カスタマーセルフリペア

修理時間を短縮し、故障部品の交換における高い柔軟性を確保するために、Hewlett Packard Enterprise製品には多数のカスタマーセルフリペア（CSR）部品があります。診断の際に、CSR部品を使用すれば修理ができるとHewlett Packard Enterprise（Hewlett Packard EnterpriseまたはHewlett Packard Enterprise正規保守代理店）が判断した場合、Hewlett Packard Enterpriseはその部品を直接、お客様に発送し、お客様に交換していただきます。CSR部品には以下の2種類があります。

- **必須** - カスタマーセルフリペアが必須の部品。当該部品について、もしもお客様がHewlett Packard Enterpriseに交換作業を依頼される場合には、その修理サービスに関する交通費および人件費がお客様に請求されます。
- **任意** - カスタマーセルフリペアが任意である部品。この部品もカスタマーセルフリペア用です。当該部品について、もしもお客様がHewlett Packard Enterpriseに交換作業を依頼される場合には、お買い上げの製品に適用される保証サービス内容の範囲内においては、別途費用を負担していただくことなく保証サービスを受けることができます。

注：Hewlett Packard Enterprise製品の一部の部品は、カスタマーセルフリペアの対象外です。製品の保証を継続するためには、Hewlett Packard EnterpriseまたはHewlett Packard Enterprise正規保守代理店による交換作業が必須となります。部品カタログには、当該部品がカスタマーセルフリペア除外品である旨が記載されています。

部品供給が可能な場合、地域によっては、CSR部品を翌営業日に届くように発送します。また、地域によっては、追加費用を負担いただくことにより同日または4時間以内に届くように発送することも可能な場合があります。サポートが必要なときは、Hewlett Packard Enterpriseサポートセンターに電話していただければ、技術者が電話でアドバイスします。交換用のCSR部品または同梱物には、故障部品をHewlett Packard Enterpriseに返送する必要があるかどうかが表示されています。故障部品をHewlett Packard Enterpriseに返送する必要がある場合は、指定期限内（通常は5営業日以内）に故障部品をHewlett Packard Enterpriseに返送してください。故障部品を返送する場合は、届いた時の梱包箱に関連書類とともに入れてください。故障部品を返送しない場合、Hewlett Packard Enterpriseから部品費用が請求されます。カスタマーセルフリペアの際には、Hewlett Packard Enterpriseは送料および部品返送費を全額負担し、使用する宅配便会社や運送会社を指定します。

部品のみ保証サービス

Hewlett Packard Enterprise保証サービスには、部品のみ保証サービスが適用される場合があります。このサービスでは、交換部品は無償で提供されます。

部品のみ保証サービスにおいては、CSR部品をお客様により交換作業していただくことが必須になります。当該部品について、もしもお客様がHewlett Packard Enterpriseに交換作業を依頼される場合には、その修理サービスに関する交通費および人件費がお客様のご負担となります。

客户自行维修

Hewlett Packard Enterprise 产品提供许多客户自行维修 (CSR) 部件，以尽可能缩短维修时间和在更换缺陷部件方面提供更大的灵活性。如果在诊断期间 Hewlett Packard Enterprise（或Hewlett Packard Enterprise 服务提供商或服务合作伙伴）确定可以通过使用 CSR 部件完成维修，Hewlett Packard Enterprise 将直接把该部件发送给您进行更换。有两类 CSR 部件：

- **强制性的** — 要求客户必须自行维修的部件。如果您请求 Hewlett Packard Enterprise 更换这些部件，则必须为该服务支付差旅费和人工费用。
- **可选的** — 客户可以选择是否自行维修的部件。这些部件也是为客户自行维修设计的。不过，如果您要求 Hewlett Packard Enterprise 为您更换这些部件，则根据为您的产品指定的保修服务类型，Hewlett Packard Enterprise 可能收取或不再收取任何附加费用。

注：某些 Hewlett Packard Enterprise 部件的设计并未考虑客户自行维修。为了满足客户保修的需要，Hewlett Packard Enterprise 要求授权服务提供商更换相关部件。这些部件在部件图解目录中标记为“否”。

CSR 部件将在下一个工作日发运（取决于备货情况和允许的地理范围）。在允许的地理范围内，可在当天或四小时内发运，但要收取额外费用。如果需要帮助，您可以致电 Hewlett Packard Enterprise 技术支持中心，将会有技术人员通过电话为您提供帮助。Hewlett Packard Enterprise 会在随更换的 CSR 部件发运的材料中指明是否必须将有缺陷的部件返还给 Hewlett Packard Enterprise。如果要求您将有缺陷的部件返还给 Hewlett Packard Enterprise，那么您必须在规定的期限内（通常是五 (5) 个工作日）将缺陷部件发给 Hewlett Packard Enterprise。有缺陷的部件必须随所提供的发运材料中的相关文件一起返还。如果未能送还有缺陷的部件，Hewlett Packard Enterprise 可能会要求您支付更换费用。客户自行维修时，Hewlett Packard Enterprise 将承担所有相关运输和部件返回费用，并指定快递商/承运商。

有关 Hewlett Packard Enterprise 客户自行维修计划的详细信息，请与您当地的服务提供商联系。

仅部件保修服务

您的 Hewlett Packard Enterprise 有限保修服务可能涉及仅部件保修服务。根据仅部件保修服务条款的规定，Hewlett Packard Enterprise 将免费提供更换的部件。

仅部件保修服务要求进行 CSR 部件更换。如果您请求 Hewlett Packard Enterprise 更换这些部件，则必须为该服务支付差旅费和人工费用。

客戶自行維修

Hewlett Packard Enterprise 產品設計了許多「客戶自行維修」(CSR) 的零件以減少維修時間，並且使得更換瑕疵零件時能有更大的彈性。如果在診斷期間，Hewlett Packard Enterprise (或 Hewlett Packard Enterprise 服務供應商或維修夥伴) 辨認出此項維修工作可以藉由使用 CSR 零件來完成，則 Hewlett Packard Enterprise 將直接寄送該零件給您作更換。CSR 零件分為兩種類別：

- **強制的** — 客戶自行維修所使用的零件是強制性的。如果您要求 Hewlett Packard Enterprise 更換這些零件，Hewlett Packard Enterprise 將會向您收取此服務所需的外出費用與勞動成本。
- **選購的** — 客戶自行維修所使用的零件是選購的。這些零件也設計用於客戶自行維修之用。不過，如果您要求 Hewlett Packard Enterprise 為您更換，則可能需要也可能不需要負擔額外的費用，端視針對此產品指定的保固服務類型而定。

備註：某些 Hewlett Packard Enterprise 零件沒有消費者可自行維修的設計。為符合客戶保固，Hewlett Packard Enterprise 需要授權的服務供應商更換零件。這些零件在圖示的零件目錄中，被標示為「否」。

基於材料取得及環境允許的情況下，CSR 零件將於下一個工作日以快遞寄送。在環境的允許下當天或四小時內送達，則可能需要額外的費用。若您需要協助，可致電 Hewlett Packard Enterprise 支援中心，會有一位技術人員透過電話來協助您。不論損壞的零件是否必須退回，Hewlett Packard Enterprise 皆會在與 CSR 替換零件一起運送的材料中註明。若要將損壞的零件退回 Hewlett Packard Enterprise，您必須在指定的一段時間內 (通常為五 (5) 個工作天)，將損壞的零件寄回 Hewlett Packard Enterprise。損壞的零件必須與寄送資料中隨附的相關技術文件一併退還。如果無法退還損壞的零件，Hewlett Packard Enterprise 可能要向您收取替換費用。針對客戶自行維修情形，Hewlett Packard Enterprise 將負責所有運費及零件退還費用，並指定使用何家快遞/貨運公司。

如需 Hewlett Packard Enterprise 的 CSR 方案詳細資訊，請連絡您當地的服務供應商。

僅限零件的保固服務

您的「Hewlett Packard Enterprise 有限保固」可能包含僅限零件的保固服務。在僅限零件的保固服務情況下，Hewlett Packard Enterprise 將免費提供替換零件。

針對僅限零件的保固服務，CSR 零件替換是強制性的。如果您要求 Hewlett Packard Enterprise 更換這些零件，Hewlett Packard Enterprise 將會向您收取此服務所需的外出費用與勞動成本。

고객 셀프 수리

Hewlett Packard Enterprise 제품은 수리 시간을 최소화하고 결함이 있는 부품 교체 시 더욱 융통성을 발휘할 수 있도록 하기 위해 고객 셀프 수리(CSR) 부품을 다량 사용하여 설계되었습니다. 진단 기간 동안 Hewlett Packard Enterprise(또는 Hewlett Packard Enterprise 서비스 공급업체 또는 서비스 협력업체)에서 CSR 부품을 사용하여 수리가 가능하다고 판단되면 Hewlett Packard Enterprise는 해당 부품을 바로 사용자에게 보내어 사용자가 교체할 수 있도록 합니다. CSR 부품에는 두 가지 종류가 있습니다.

- **필수** - 고객 셀프 수리가 의무 사항인 필수 부품. 사용자가 Hewlett Packard Enterprise에 이 부품의 교체를 요청할 경우 이 서비스에 대한 출장비 및 작업비가 청구됩니다.
- **선택 사항** - 고객 셀프 수리가 선택 사항인 부품. 이 부품들도 고객 셀프 수리가 가능하도록 설계되었습니다. 하지만 사용자가 Hewlett Packard Enterprise에 이 부품의 교체를 요청할 경우 사용자가 구입한 제품에 해당하는 보증 서비스 유형에 따라 추가 비용 없이 교체가 가능할 수 있습니다.

참고: 일부 Hewlett Packard Enterprise 부품은 고객 셀프 수리가 불가능하도록 설계되었습니다. Hewlett Packard Enterprise는 만족스러운 고객 보증을 위해 공인 서비스 제공업체를 통해 부품을 교체하도록 하고 있습니다. 이러한 부품들은 Illustrated Parts Catalog에 "No"라고 표시되어 있습니다.

CSR 부품은 재고 상태와 지리적 조건이 허용하는 경우 다음 영업일 납품이 가능하도록 배송이 이루어집니다. 지리적 조건이 허용하는 경우 추가 비용이 청구되는 조건으로 당일 또는 4시간 배송이 가능할 수도 있습니다. 도움이 필요하시면 Hewlett Packard Enterprise Support Center로 전화하십시오. 전문 기술자가 전화로 도움을 줄 것입니다. Hewlett Packard Enterprise는 결함이 발생한 부품을 Hewlett Packard Enterprise로 반환해야 하는지 여부를 CSR 교체 부품과 함께 배송된 자료에 지정합니다. 결함이 발생한 부품을 Hewlett Packard Enterprise로 반환해야 하는 경우에는 지정된 기간 내(통상 영업일 기준 5일)에 Hewlett Packard Enterprise로 반환해야 합니다. 이때 결함이 발생한 부품은 제공된 포장 재료에 넣어 관련 설명서와 함께 반환해야 합니다. 결함이 발생한 부품을 반환하지 않는 경우 Hewlett Packard Enterprise가 교체 부품에 대해 비용을 청구할 수 있습니다. 고객 셀프 수리의 경우, Hewlett Packard Enterprise는 모든 운송 및 부품 반환 비용을 부담하며 이용할 운송업체 및 택배 서비스를 결정합니다.

Hewlett Packard Enterprise CSR 프로그램에 대한 자세한 내용은 가까운 서비스 제공업체에 문의하십시오.

부품 제공 보증 서비스

Hewlett Packard Enterprise 제한 보증에는 부품 제공 보증 서비스가 포함될 수 있습니다. 이러한 경우 Hewlett Packard Enterprise는 부품 제공 보증 서비스의 조건에 따라 교체 부품만을 무료로 제공합니다.

부품 제공 보증 서비스 제공 시 CSR 부품 교체는 의무 사항입니다. 사용자가 Hewlett Packard Enterprise에 이 부품의 교체를 요청할 경우 이 서비스에 대한 출장비 및 작업비가 청구됩니다.

Removal and replacement procedures

This chapter provides detailed instructions on how to remove and replace component spare parts.

Required tools

The following tools might be required to perform some procedures:

- T-10 Torx screwdriver

- T-15 Torx screwdriver
- HPE Insight Diagnostics software

Preparation procedures

To access some components and perform certain service procedures, you must perform one or more of the following procedures:

- Power down the server.
  If you must remove the chassis from a rack or a non-hot-plug component from the chassis or server, then you must power down the servers. If only one server requires to be serviced, power down only that server.

  If you are going to service the management module, you must power down all servers in the chassis.
- Extend the drive drawer from the chassis.
- Remove the chassis from the rack.
- Remove the server from the chassis.
  If the rack environment, cabling configuration, or the chassis location in the rack creates unstable conditions, then remove the server from the chassis.

Power down the server

Before powering down the server for any upgrade or maintenance procedures, perform a backup of critical server data and programs.

> **IMPORTANT:**
> When the server is in standby mode, auxiliary power is still being provided to the system.

To power down the server, use one of the following methods:

- Press and release the Power On/Standby button.
  This method initiates a controlled shutdown of applications and the OS before the server enters standby mode.

- Press and hold the Power On/Standby button for more than 4 seconds to force the server to enter standby mode.
  This method forces the server to enter standby mode without properly exiting applications and the OS. If an application stops responding, you can use this method to force a shutdown.
- Use a virtual power button selection through iLO.
  This method initiates a controlled remote shutdown of applications and the OS before the server enters standby mode.

Before proceeding, verify that the server is in standby mode by observing that the system power LED is amber.

Power up the server

Procedure

1. Connect the power cables to the power supplies.
2. Connect the power cables to the power source (UPS or wall outlet) or to an installed PDU.
3. Press the Power On/Standby button on the server.

Extend the drive drawer from the chassis

WARNING:
Do not keep the drive drawer open for more than three minutes. Keeping the drawer open for longer than three minutes can cause the system to shut down due to overheating.

NOTE:
Keeping the drawer open might result in reduced system performance or thermal shutdown.

CAUTION:
Do not open more than one drive drawer at a time.

Procedure

Extend the drive drawer from the chassis as indicated.

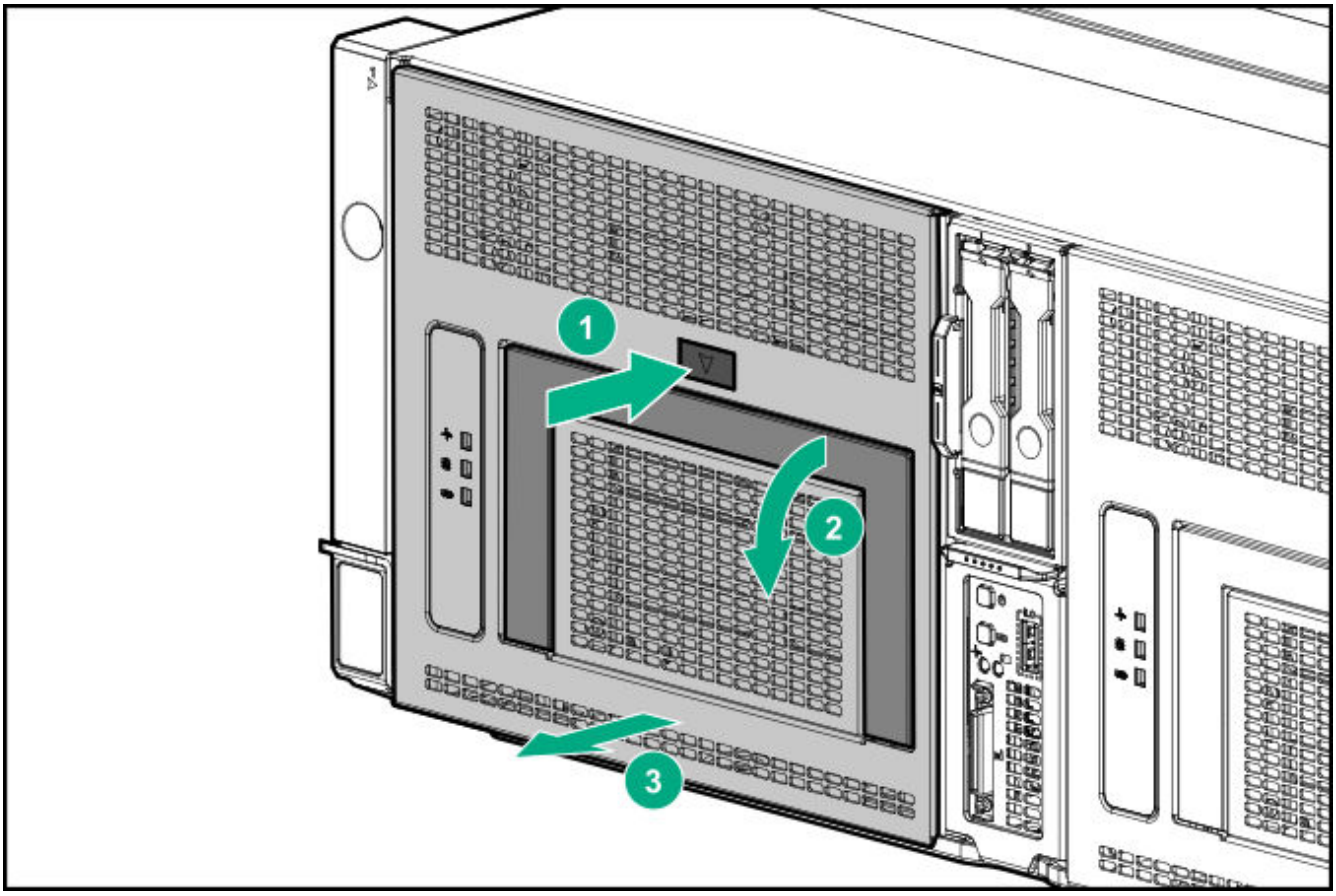

Remove the chassis from the rack

WARNING: The chassis is very heavy. To reduce the risk of personal injury or damage to the equipment:

- Observe local occupational health and safety requirements and guidelines for manual material handling.
- Remove all installed components from the chassis before installing or moving the chassis.
- Use caution and get help to lift and stabilize the chassis during installation or removal, especially when the chassis is not fastened to the rack.

WARNING:

To reduce the risk of personal injury or damage to the equipment, you must adequately support the chassis during installation and removal.

Procedure

1. Power down the server.
2. Disconnect all peripheral devices from the chassis.
3. Remove the power supplies (Removing and replacing a power supply).
4. Remove the system fans (Removing and replacing the system fan).
5. Remove the I/O module (Removing and replacing the I/O module).
6. Remove all servers from the chassis (Remove the server from the chassis).

   IMPORTANT:

   Label the drives before removing them. The drives must be returned to their original locations.

7. Remove all drives (Removing and replacing a drive).
8. Remove the chassis from the rack.

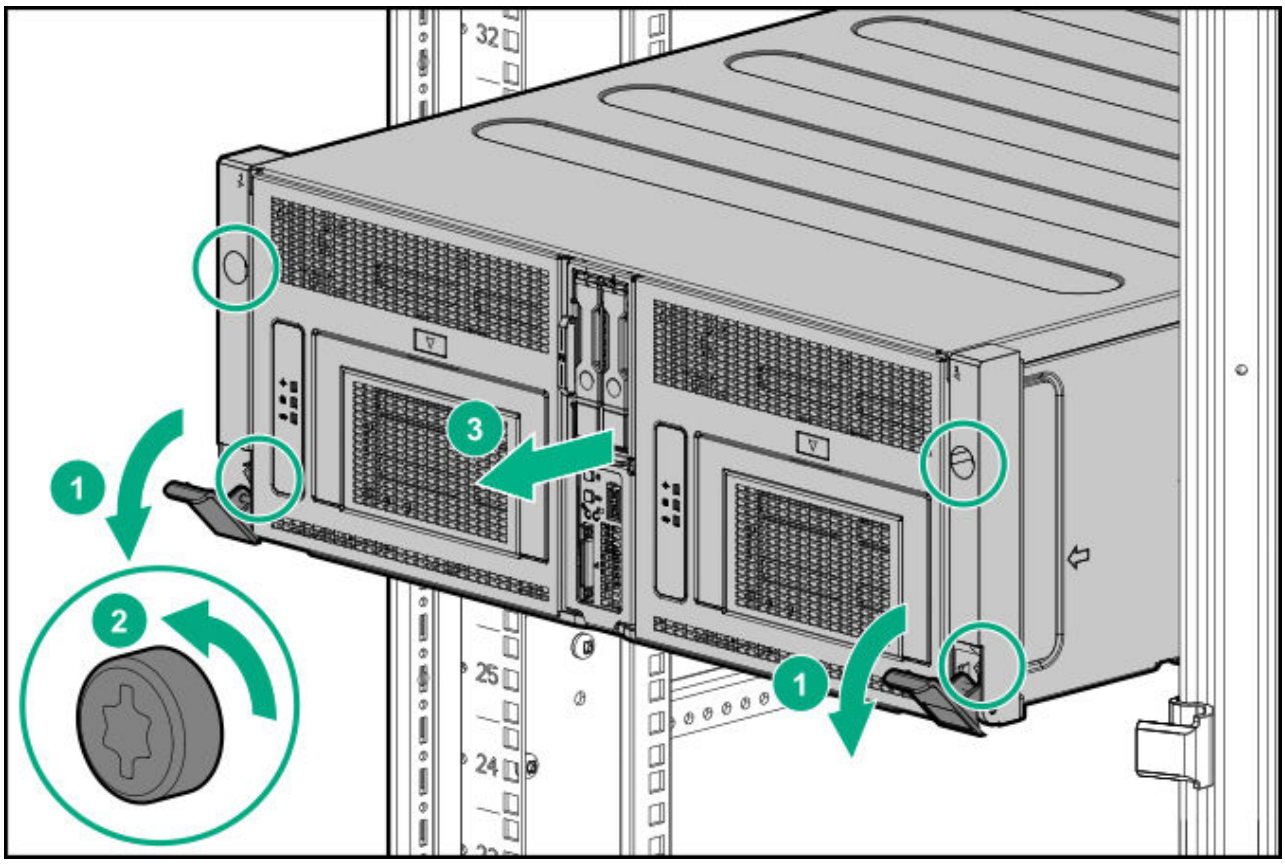

9. Place the chassis on a flat, sturdy surface to support the chassis.

Install the chassis into the rack

WARNING: Always have at least four people to lift the chassis into the rack. If the chassis is being loaded into the rack above chest level, an additional person must assist with aligning the chassis with the rails while the other people support the weight of the chassis.

WARNING: To avoid risk of personal injury or damage to the equipment, do not stack anything on top of rail-mounted equipment or use it as a work surface when extended from the rack.

CAUTION: Be sure to keep the product parallel to the floor when installing the chassis. Tilting the product up or down could result in damage to the rails.

WARNING: The chassis is very heavy. To reduce the risk of personal injury or damage to the equipment:

- Observe local occupational health and safety requirements and guidelines for manual material handling.
- Remove all installed components from the chassis before installing or moving the chassis.
- Use caution and get help to lift and stabilize the chassis during installation or removal, especially when the chassis is not fastened to the rack.

CAUTION: Always plan the rack installation so that the heaviest item is on the bottom of the rack. Install the heaviest item first, and continue to populate the rack from the bottom to the top.

CAUTION: Hewlett Packard Enterprise has not tested or validated the chassis with any third-party racks. Before installing the chassis in a third-party rack, be sure to properly scope the limitations of the rack. Before proceeding with the installation, consider the following:

- You must fully understand the static and dynamic load carrying capacity of the rack and be sure that it can accommodate the weight of the chassis.
- Be sure sufficient clearance exists for cabling, installation and removal of the chassis, and actuation of the rack doors.

The chassis requires rails for installation in a rack. To install the rack rails, see the HPE Apollo 4500 4U Rail Installation Instructions that ship with the rack hardware kit.

You can install up to nine chassis in a 36U, 1200mm deep rack. If you are installing more than one chassis, install the first chassis in the bottom of the rack, and then install additional chassis by moving up the rack with each subsequent chassis. Plan the rack installation carefully because it is difficult to change the location of components after they are installed.

WARNING: To reduce the risk of personal injury or damage to the equipment, be sure that:

- The rack is bolted to the floor using the concrete anchor kit.
- The leveling feet extend to the floor.
- The full weight of the rack rests on the leveling feet.
- The racks are coupled together in multiple rack installations.
- Only one component is extended at a time. If more than one component is extended, a rack might become unstable.

WARNING: To reduce the risk of personal injury or equipment damage, be sure that the rack is adequately stabilized before installing the chassis.

Procedure

1. Align and install the right and left rails into the rack.

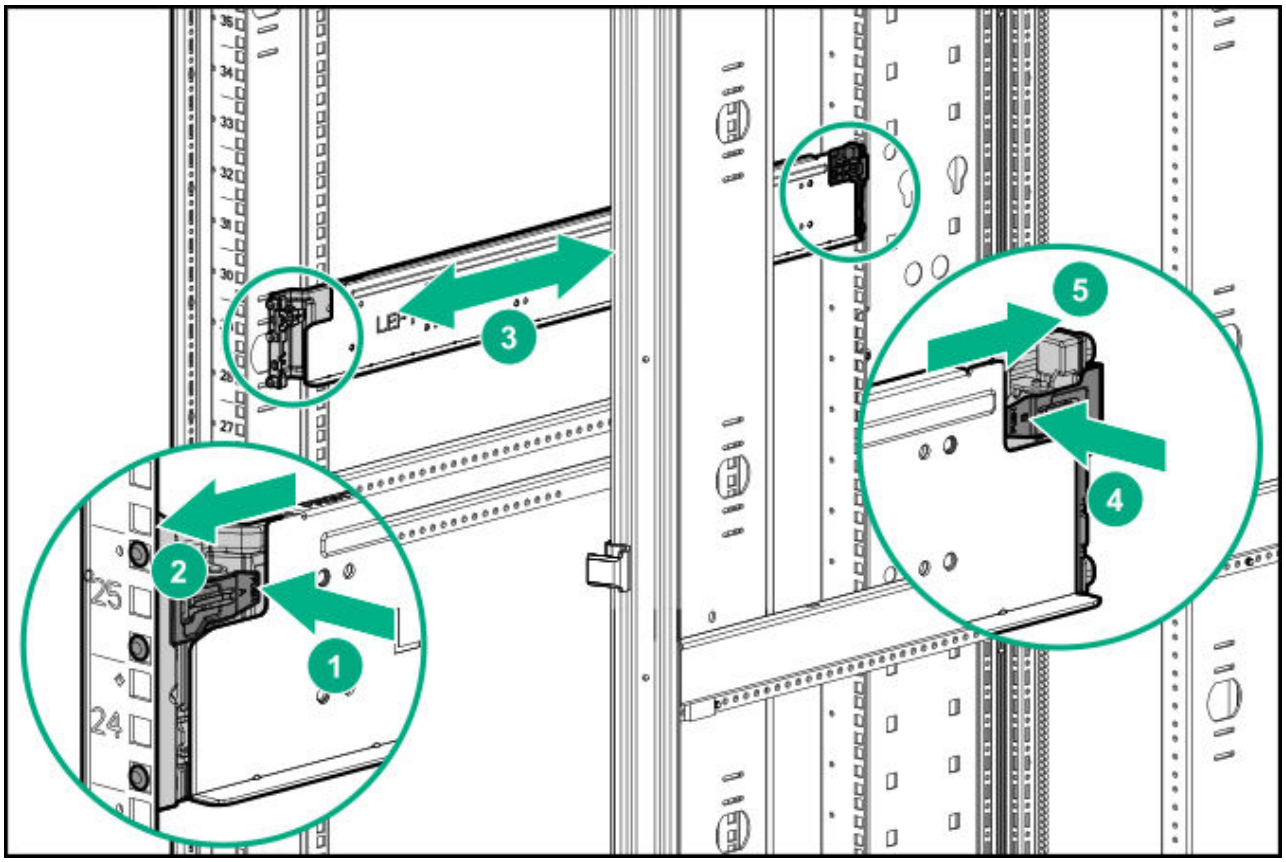

2. Align and install the support brackets on the rear of the rack.

   The R and L on the brackets indicate the location when standing at the rear of the rack.

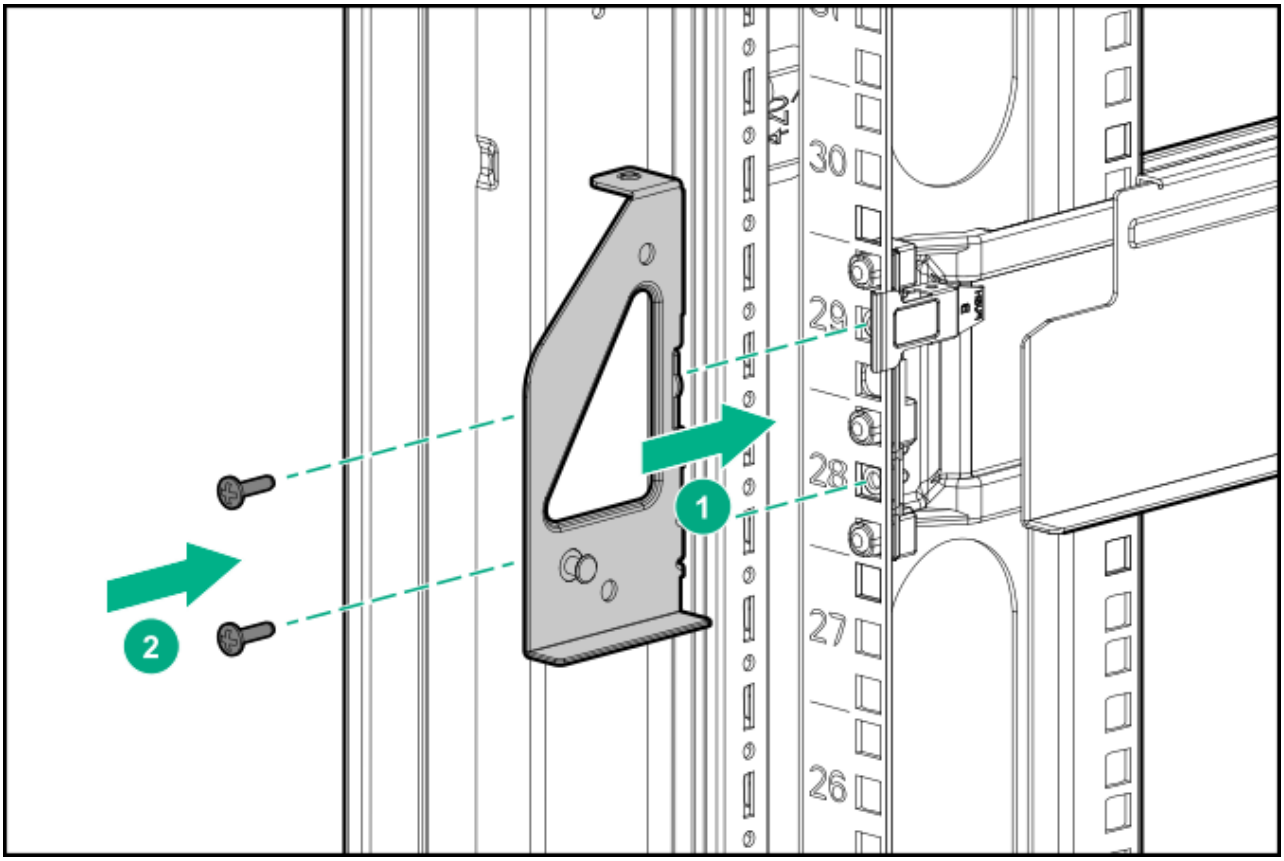

3. Install a cage nut into the rack on each side in the top hole at 3U above the bottom of the rail.

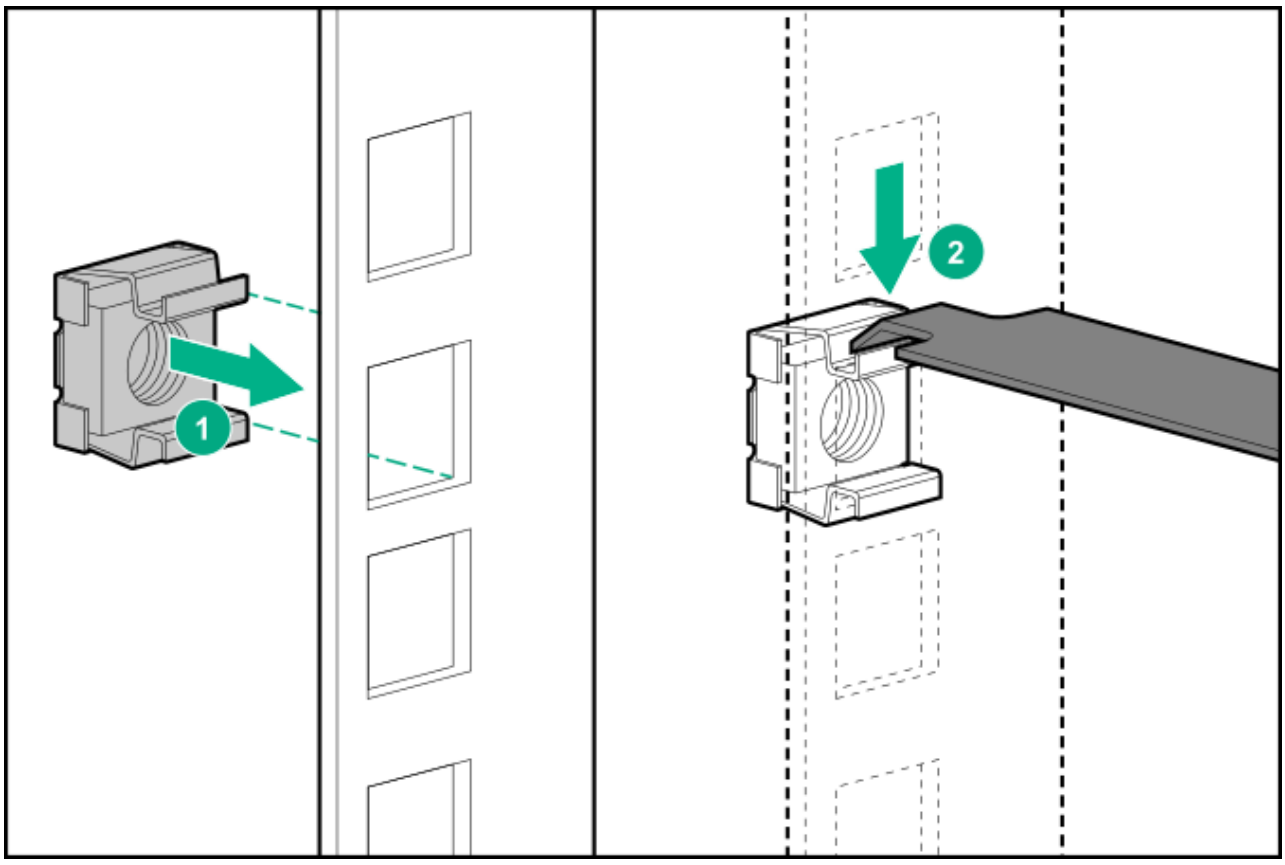

4. If you are installing the chassis manually, install the chassis lift handles:
   a. Align the chassis lift handles with the tick marks on the side of the chassis.

      Tick marks are provided on the side of the chassis to assist with aligning the handles for installation.

   b. Install both chassis lift handles on either side of the chassis.

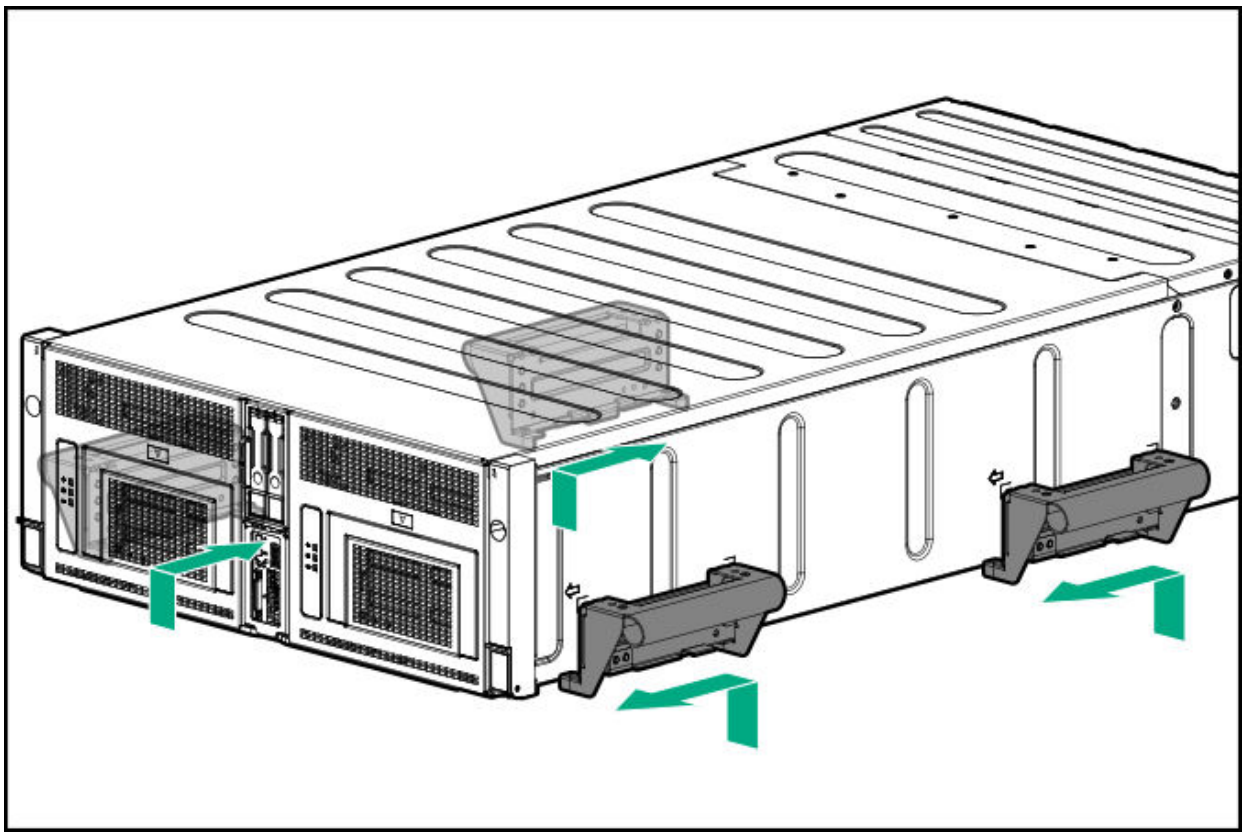

5. Remove the chassis lift handles when sliding the chassis onto the rails:

   a. Remove the chassis lift handles from the chassis.

      Do not remove the chassis handles until the weight of the chassis is resting on the rails. Retain the chassis handles for future use.

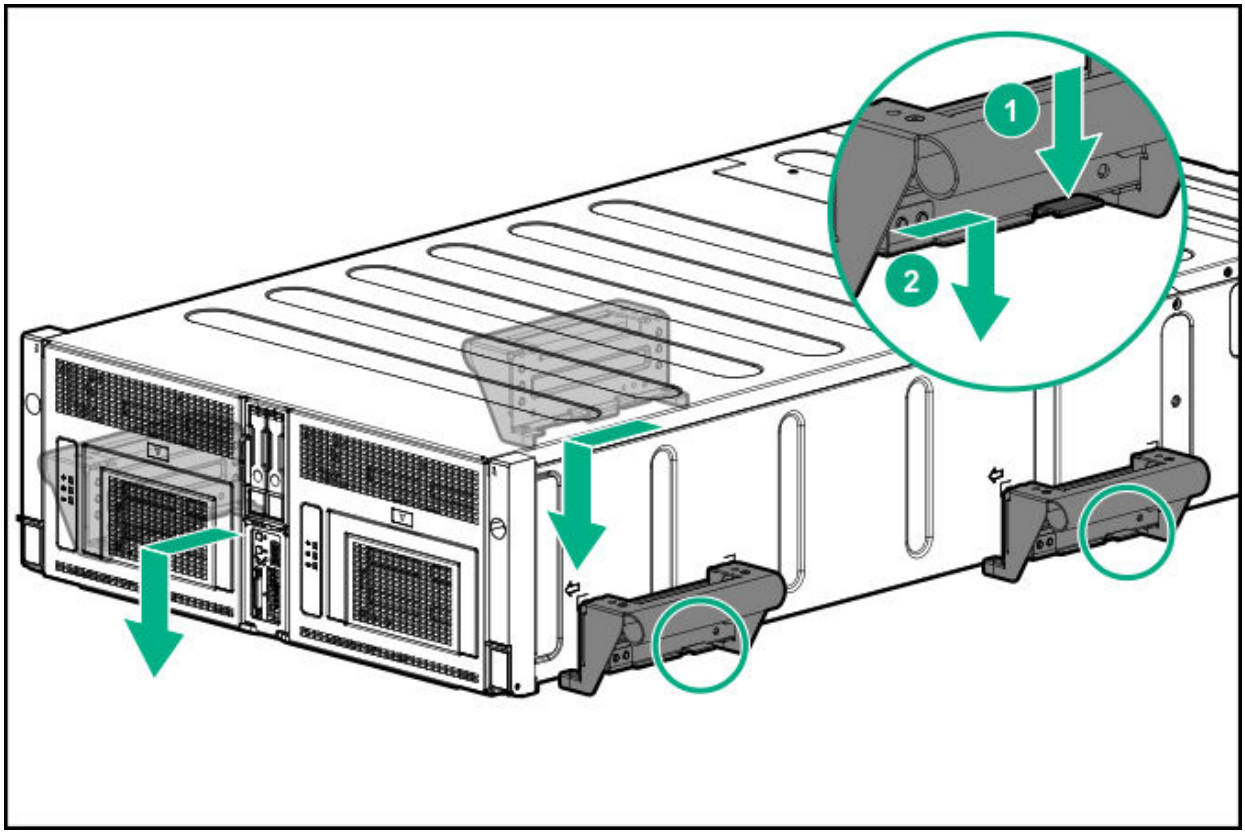

6. Align and install the chassis into the rack.

   Slide the chassis into the rack until the ears are flush against the rack posts and secure the chassis to the rack.

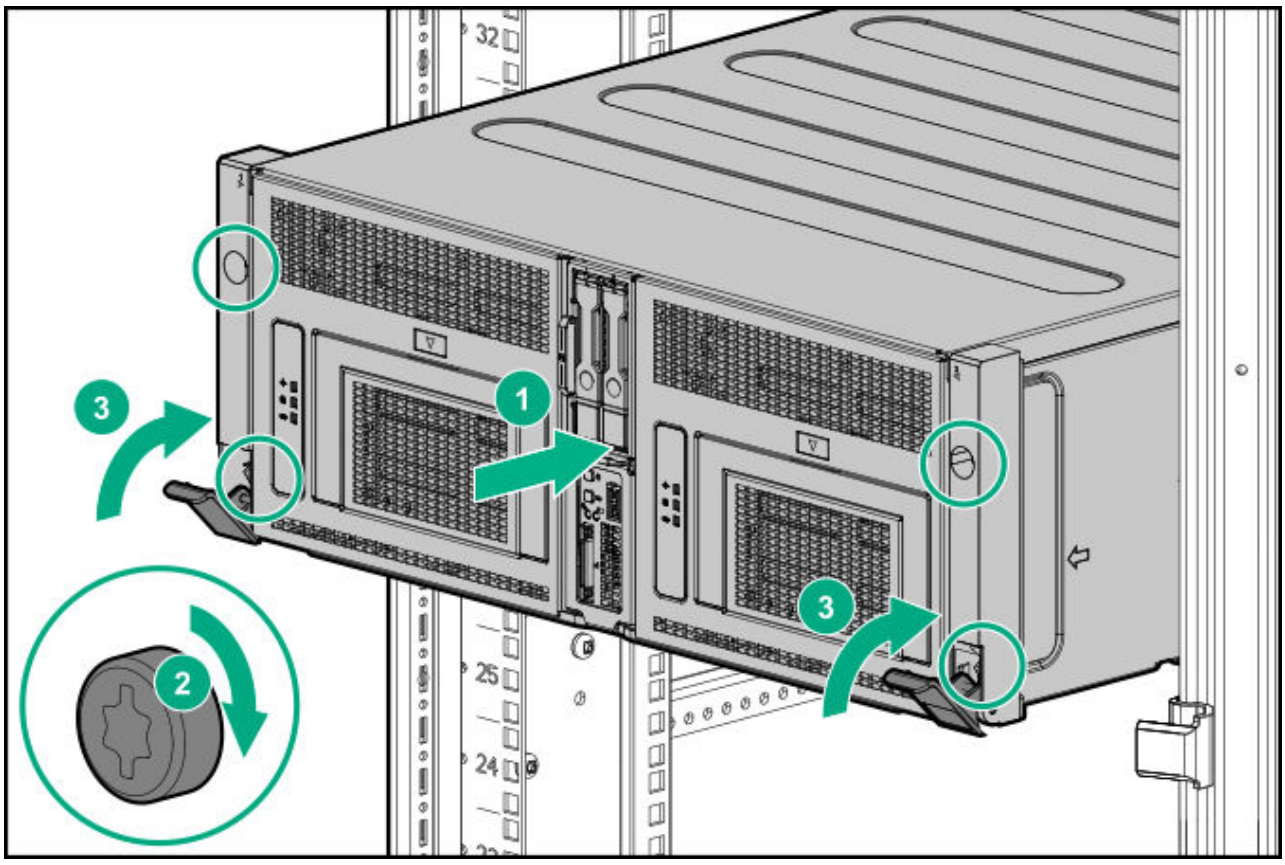

Remove the server from the chassis

CAUTION: Before removing the server, verify that the server backup LED is not flashing.

Procedure

1. Power down the server.

   CAUTION:

   To avoid damage to the server, always support the bottom of the server when removing it from the chassis.

2. Remove the server from the chassis.

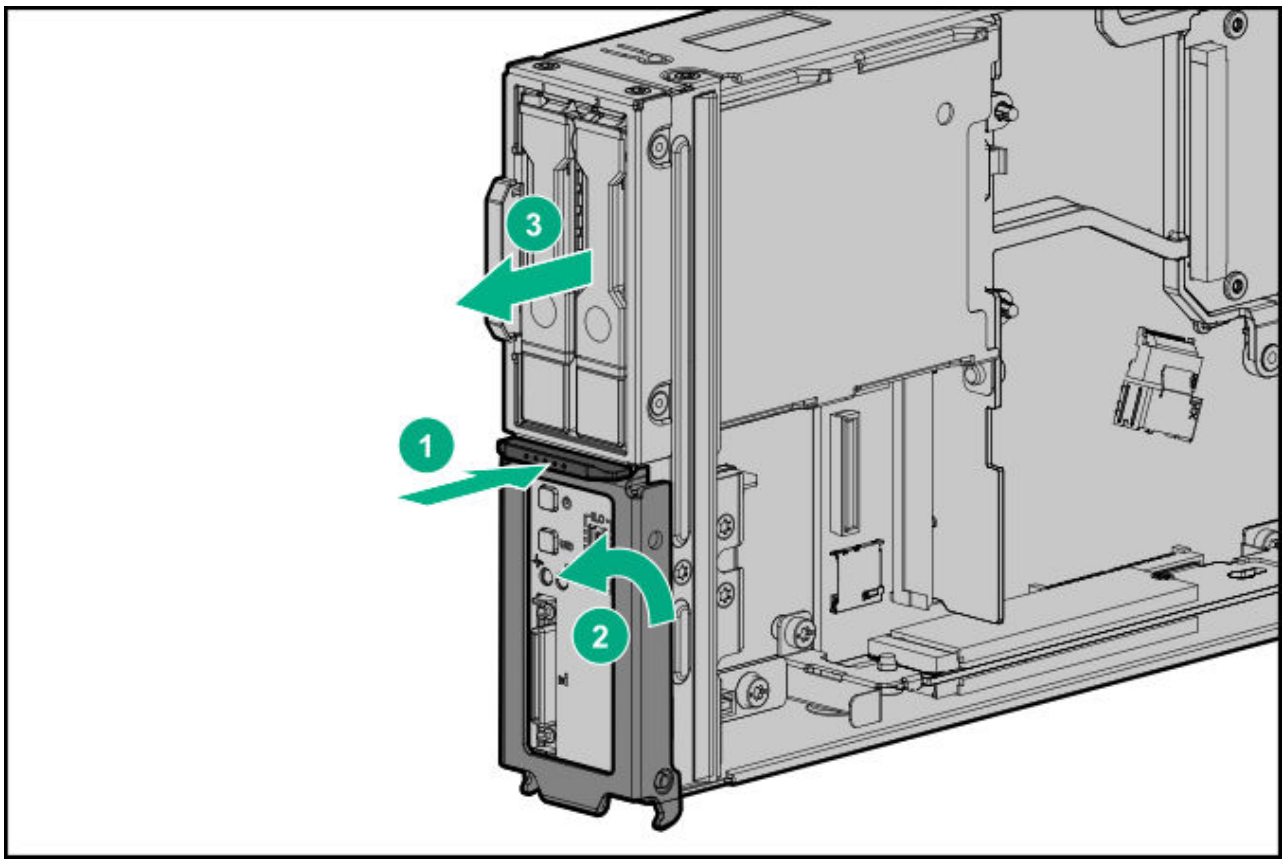

NOTE: To avoid damage to the device, do not use the removal handle to carry it.

3. Place the server on a flat, level work surface.

Safety considerations

Before performing service procedures, review all the safety information.

Preventing electrostatic discharge

To prevent damaging the system, be aware of the precautions you must follow when setting up the system or handling parts. A discharge of static electricity from a finger or other conductor may damage system boards or other static-sensitive devices. This type of damage may reduce the life expectancy of the device.

Procedure

- Avoid hand contact by transporting and storing products in static-safe containers.
- Keep electrostatic-sensitive parts in their containers until they arrive at static-free workstations.
- Place parts on a grounded surface before removing them from their containers.
- Avoid touching pins, leads, or circuitry.
- Always be properly grounded when touching a static-sensitive component or assembly.

Symbols on equipment

The following symbols might be found on the equipment to indicate the presence of potentially hazardous conditions.

WARNING:

 This symbol indicates the presence of hazardous energy circuits or electric shock hazards. Refer all servicing to qualified personnel.

To reduce the risk of injury from electric shock hazards, do not open this enclosure. Refer all maintenance, upgrades, and servicing to qualified personnel.

WARNING:

 This symbol indicates the presence of electric shock hazards. The area contains no user or field serviceable parts. Do not open for any reason.

To reduce the risk of injury from electric shock hazards, do not open this enclosure.

WARNING:



This symbol on an RJ-45 receptacle indicates a network interface connection.

To reduce the risk of electric shock, fire, or damage to the equipment, do not plug telephone or telecommunications connectors into this receptacle.

WARNING:

 This symbol indicates the presence of a hot surface or hot component. If this surface is contacted, the potential for injury exists.

To reduce the risk of injury from a hot component, allow the surface to cool before touching.

WARNING:

 This symbol indicates that the component exceeds the recommended weight for one individual to handle safely.

To reduce the risk of personal injury or damage to the equipment, observe local occupational health and safety requirements and guidelines for manual material handling.

99.79 kg

220.00 lb

WARNING:

 These symbols, on power supplies or systems, indicate that the equipment is supplied by multiple sources of power.

To reduce the risk of injury from electric shock, remove all power cords to disconnect power from the system completely.

System warnings and cautions

Before installing a server, be sure that you understand the following warnings and cautions.

WARNING:
To reduce the risk of electric shock or damage to the equipment:

- Do not disable the power cord grounding plug. The grounding plug is an important safety feature.
- Plug the power cord into a grounded (earthed) electrical outlet that is easily accessible at all times.
- Unplug the power cord from the power supply to disconnect power to the equipment.
- Do not route the power cord where it can be walked on or pinched by items placed against it. Pay particular attention to the plug, electrical outlet, and the point where the cord extends from the server.

WARNING: To reduce the risk of personal injury from hot surfaces, allow the drives and the internal system components to cool before touching them.

Removing and replacing the bezel ear

Procedure

1. Power down the server.
2. Remove the bezel ear.

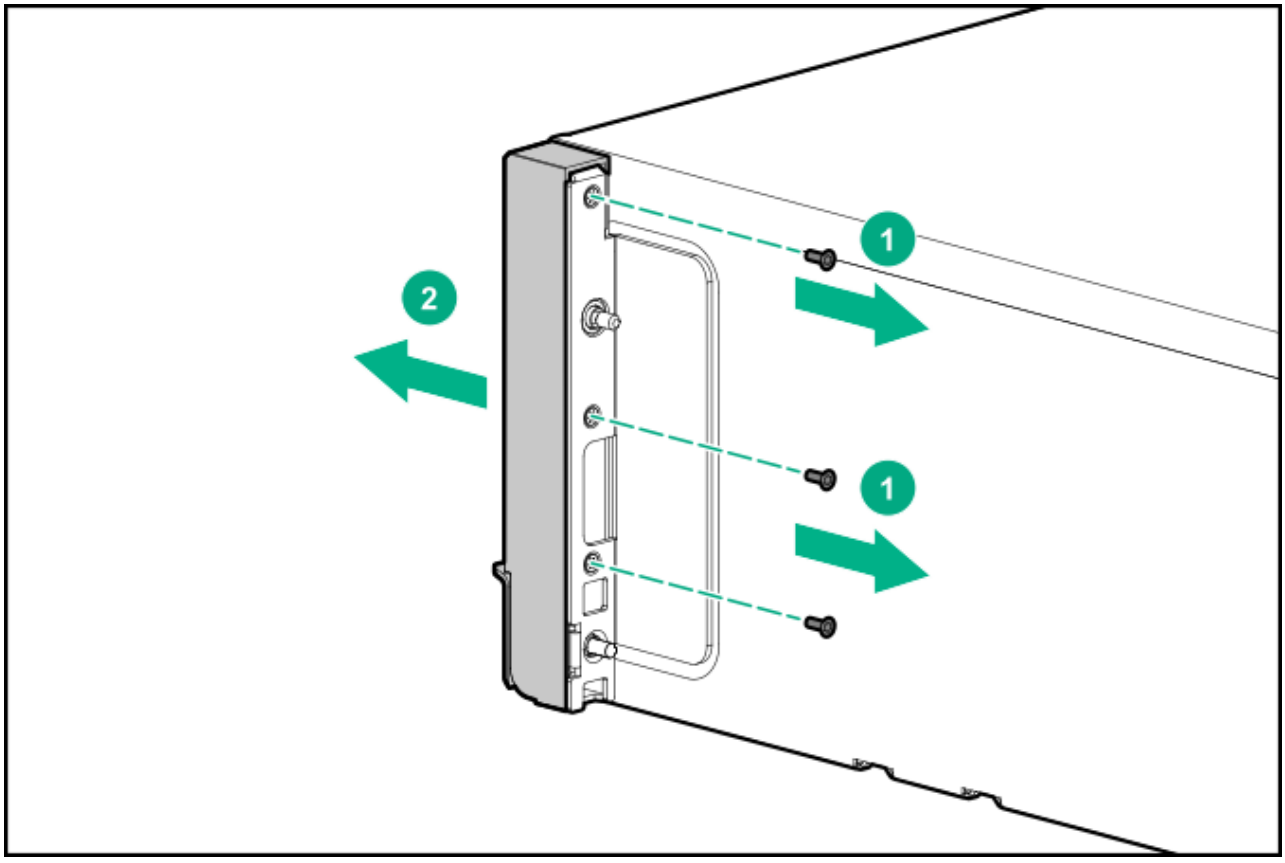

To replace the component, reverse the removal procedure.

Removing and replacing the management module

CAUTION:
To avoid loss of data, back up all data and power down the node before removing the management module.

Procedure

1. Power down the server.
2. Remove the management module.

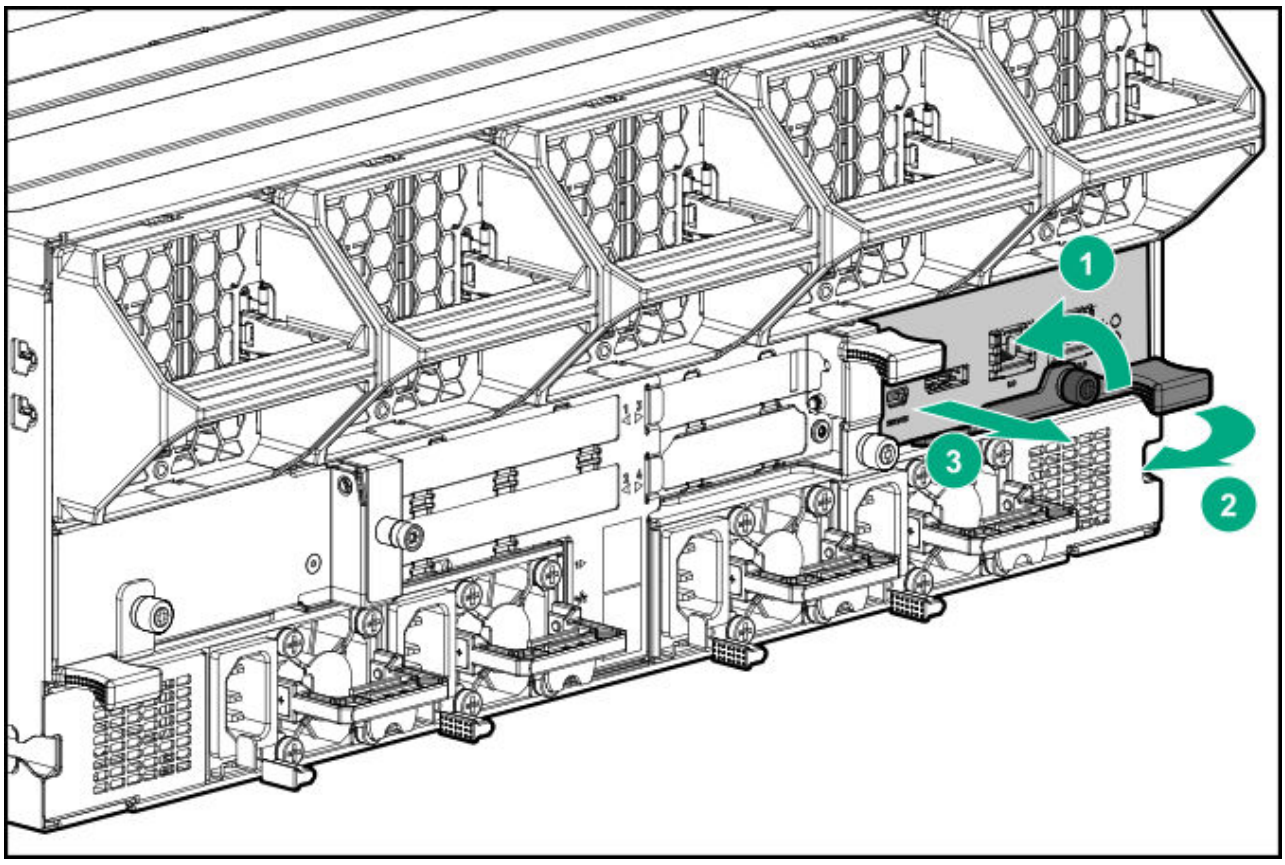

To replace the component, reverse the removal procedure.

Removing and replacing the I/O module

Procedure

1. Power down the server.
2. Disconnect any cables connected to the I/O module.
3. Remove the I/O module.

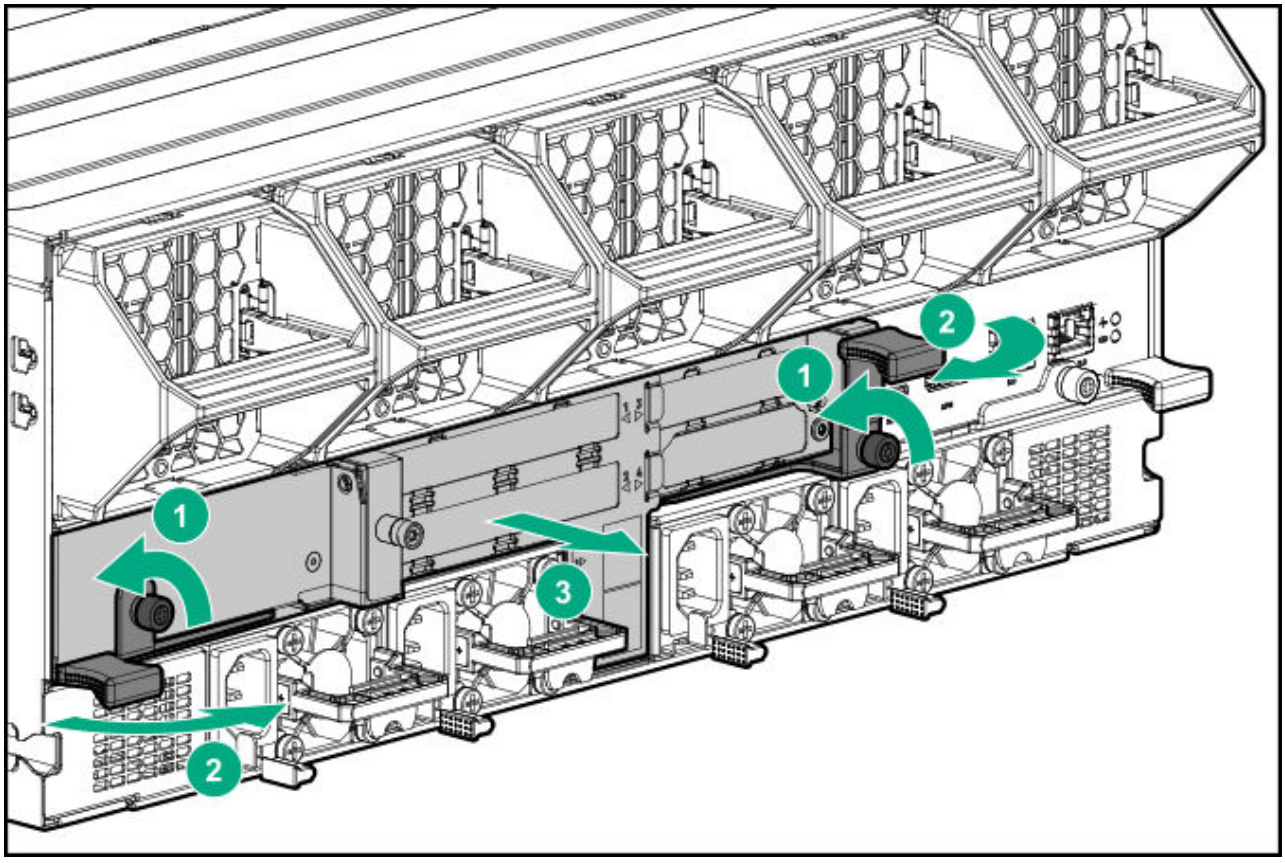

To replace the component, reverse the removal procedure.

NOTE: Replacing the I/O module also replaces the 332i 1 Gb network adapter, which results in a new MAC address for the network adapter.

Removing and replacing an expansion board

Procedure

1. Remove the I/O module (Removing and replacing the I/O module).
2. Disconnect the cables connected to the expansion board option.
3. Remove the support bracket from the I/O module.

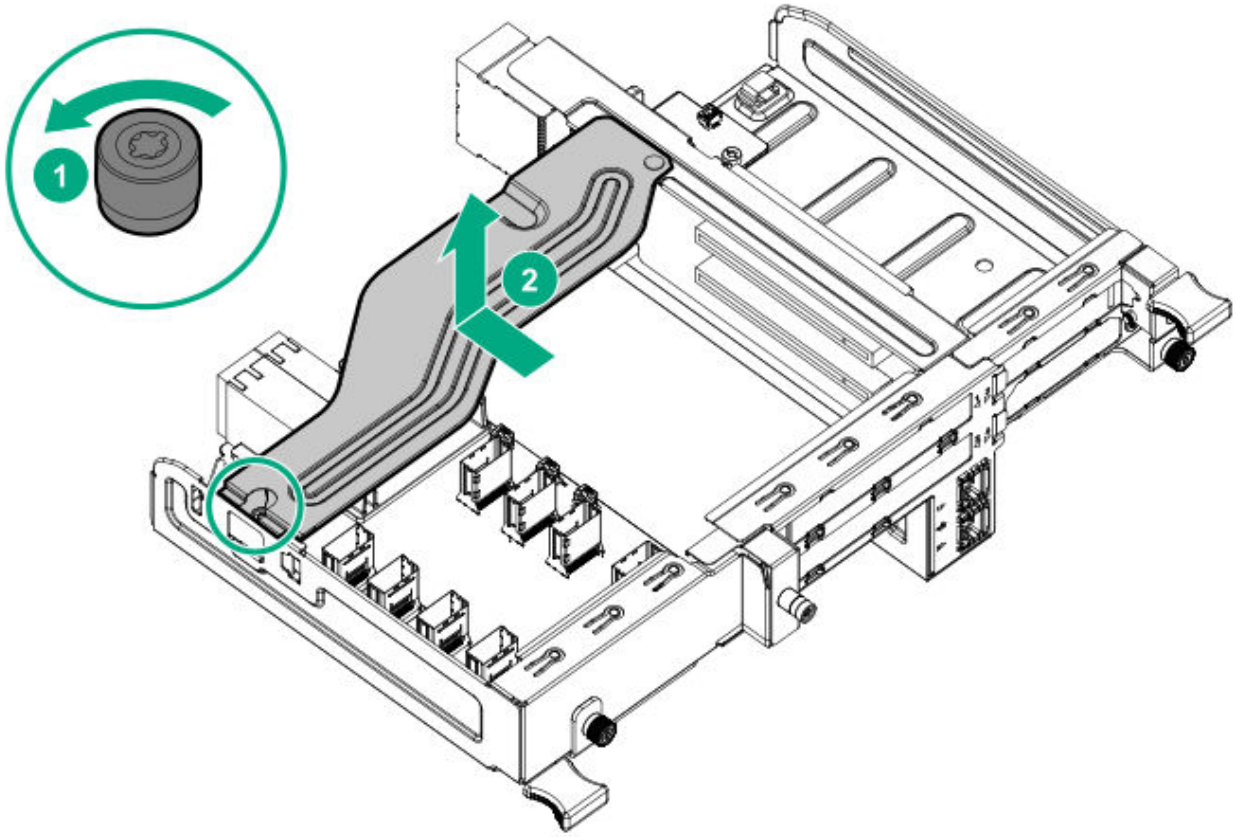

4. Remove the riser assembly from the I/O module.

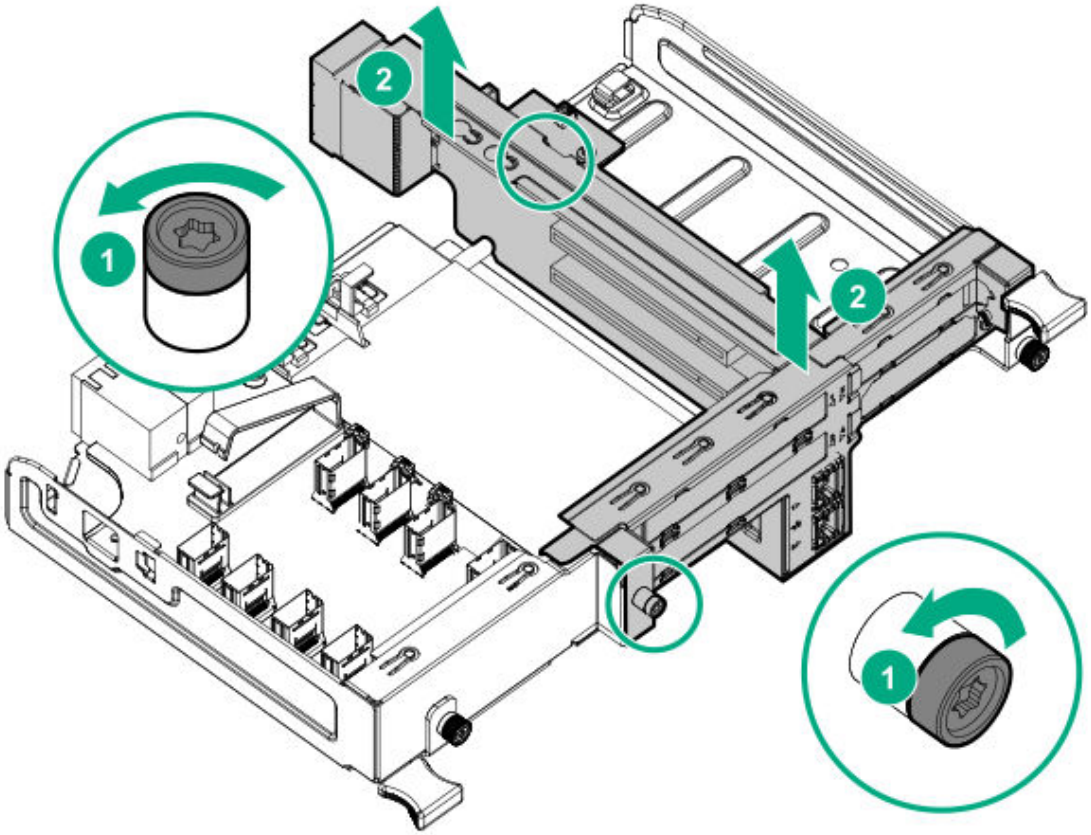

5. Remove the expansion board option from the PCIe expansion slot.

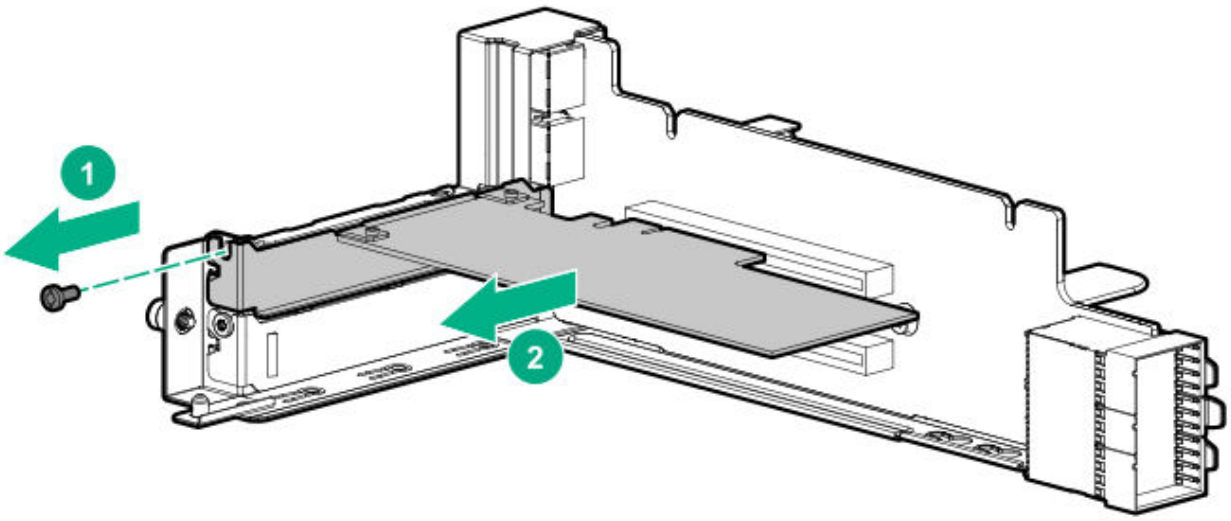

To replace the component:

1. Install a supported expansion board option in one of the PCIe expansion slots.

IMPORTANT:

If replacing a Pensando DSP DSC-25 2p SFP28 card, you must first decommission the card using the Pensando Policy and Services Manager (PSM).

For more information, see Pensando Distributed Services Card for Single-Wire Management (DSC-25-SWM) Removal/Replacement Guide on the Hewlett Packard Enterprise website (**https://www.hpe.com/support/dsc25-replacement**).

NOTE:

If replacing a Pensando DSP DSC-25 2p SFP28 card, the card can be installed into any slot.

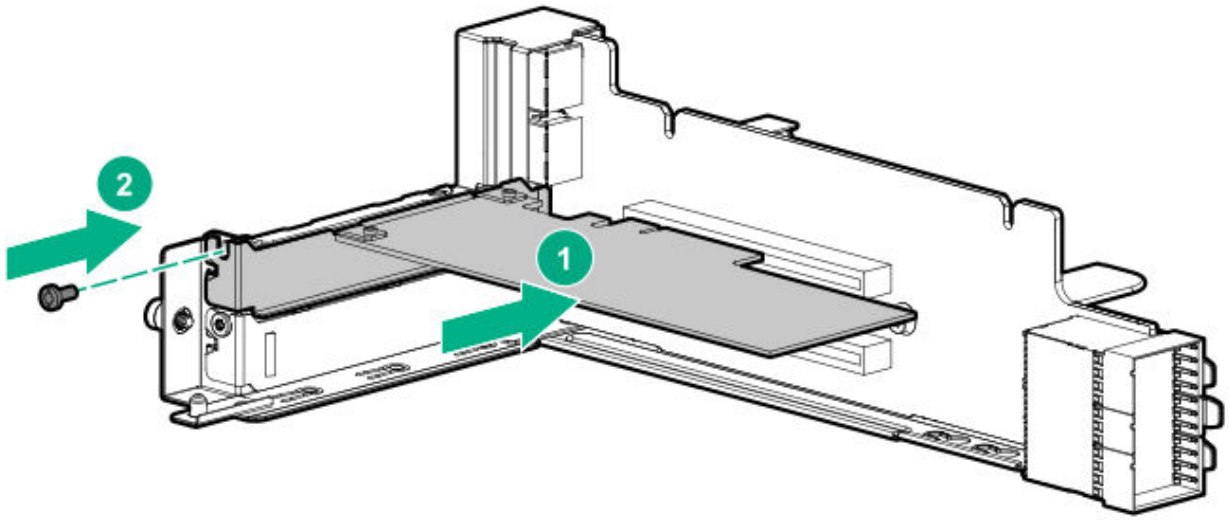

2. Cable the board according to the option installed. For more information, see I/O module option cabling.

3. If you are replacing a Pensando DSP DSC-25 2p SFP28 card, associate the new DSC-25 card with a Pensando Policy and Services Manager (PSM).

   For more information, see Pensando Distributed Services Card for Single-Wire Management (DSC-25-SWM) Removal/Replacement Guide on the Hewlett Packard Enterprise website (**https://www.hpe.com/support/dsc25-replacement**).

> **IMPORTANT:**
> To enable SmartCache or CacheCade in a type-p Smart Array controller, you must:
>
> - Connect the controller backup power cable to the controller backup power connector on the system or riser board.
> - Connect the energy pack cable to the connector on the I/O SAS board.

More information

I/O SAS board port identification

Removing and replacing the HPE NS204i-p NVMe OS Boot Device option

Removing and replacing the boot device

Procedure

1. Observe the following alerts:

> **CAUTION:**
> The boot device and the drives installed on the boot device are not hot-pluggable. To remove the boot device, or a drive from the boot device, you must first power down the server.

WARNING: To reduce the risk of personal injury from hot surfaces, allow the drives and the internal system components to cool before touching them.

2. Remove the I/O module (Removing and replacing the I/O module).
3. Remove the support bracket from the I/O module.

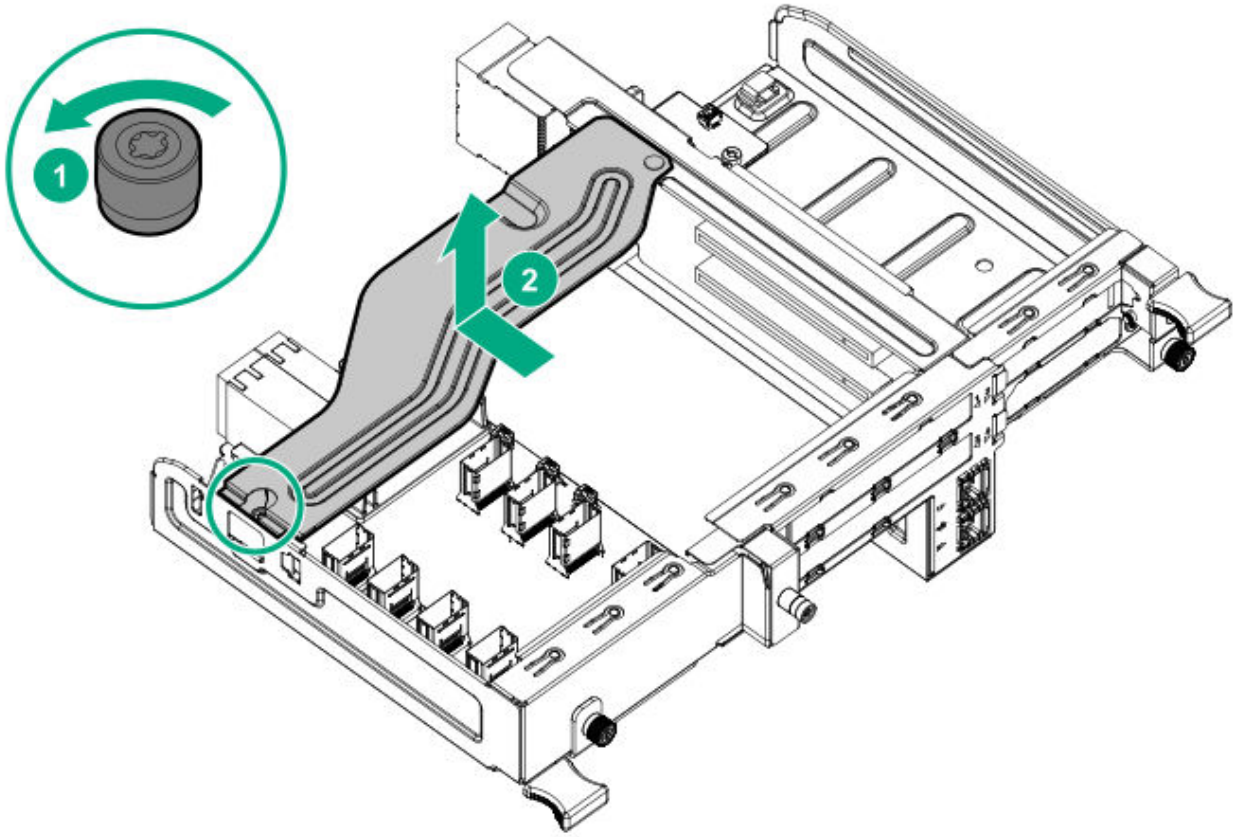

4. Remove the riser assembly from the I/O module.

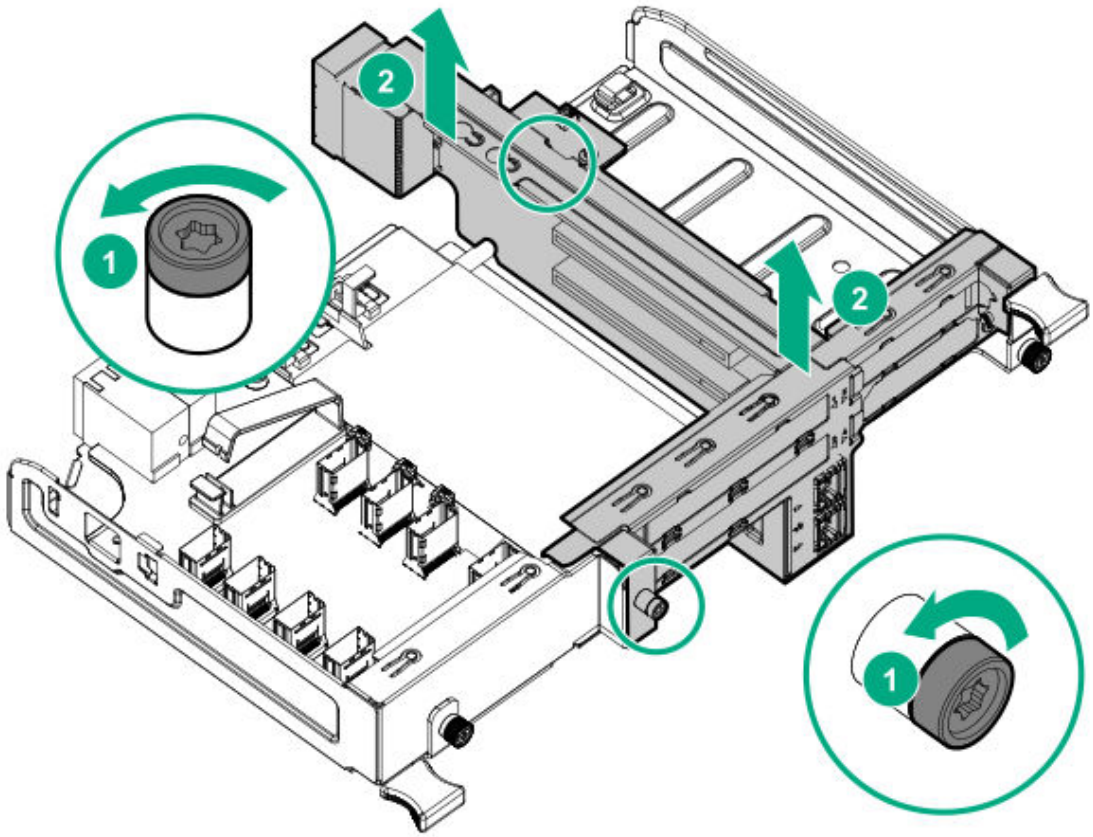

5. Remove the boot device.

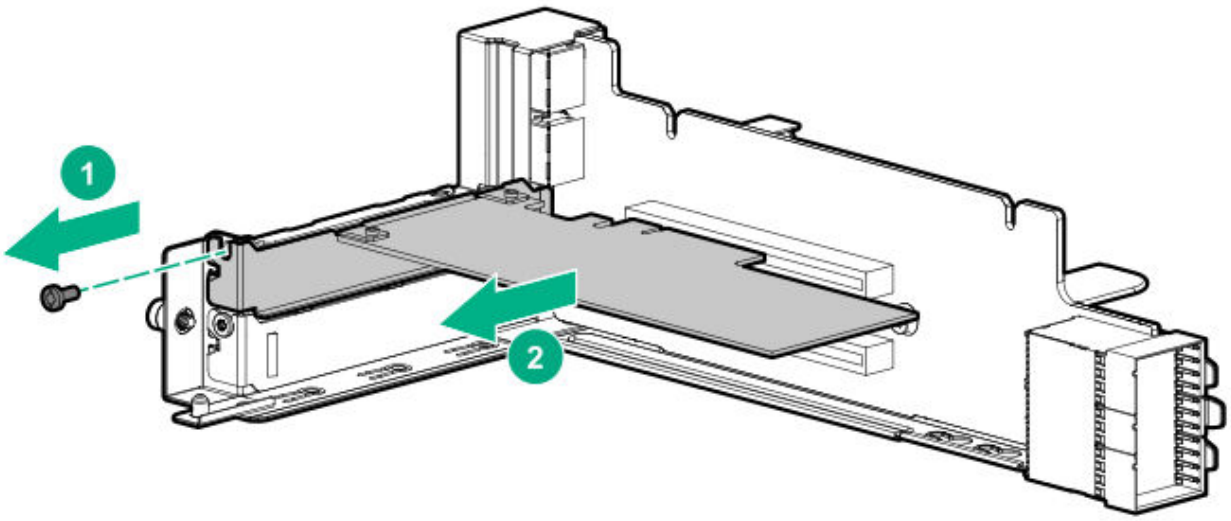

6. Remove the drives from the boot device.

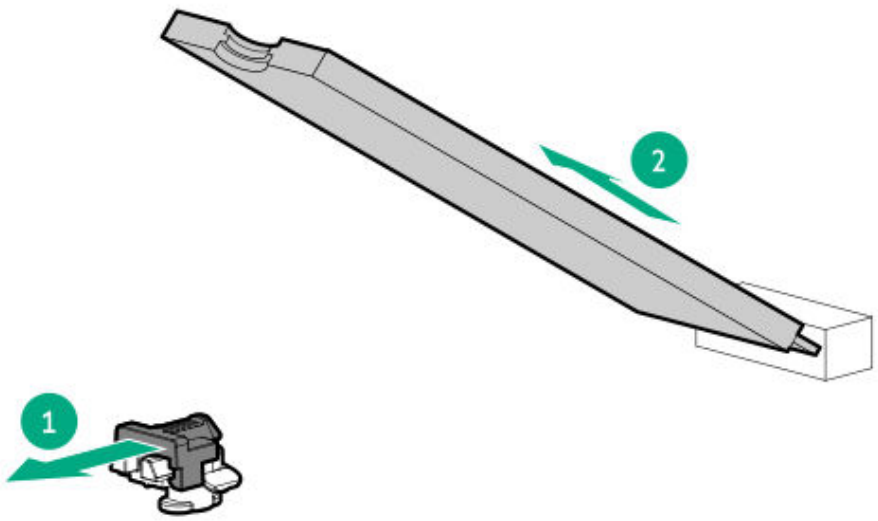

Retain these drives for installation onto the replacement boot device.

To replace the component, reverse the removal procedure.

Removing and replacing a boot device drive

The boot device supports two physical drive sizes:

- 22110 (110 mm)
- 2280 (80 mm)

Two drives of the same physical size, or one of each size, can be installed at the same time. Depending on the replacement drive size, you might need to relocate the M.2 drive retaining latches on the boot device.

Prerequisites

Review the boot device drive bay LEDs to determine the failed drive.

Procedure

1. Observe the following alerts:

CAUTION:

The boot device and the drives installed on the boot device are not hot-pluggable. To remove the boot device, or a drive from the boot device, you must first power down the server.

WARNING: To reduce the risk of personal injury from hot surfaces, allow the drives and the internal system components to cool before touching them.

2. Remove the I/O module (Removing and replacing the I/O module).
3. Remove the boot device (Removing and replacing the boot device).
4. Remove the failed drive from the boot device.

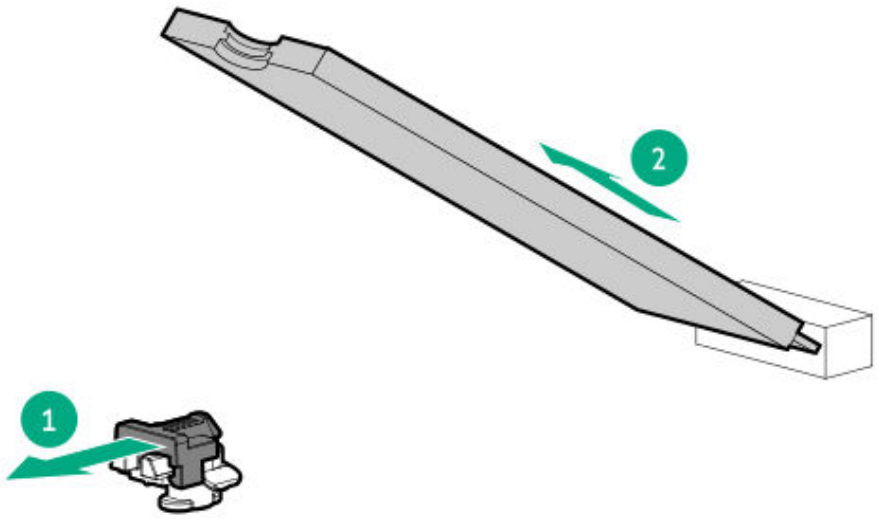

To replace the component, reverse the removal procedure.

Relocating the M.2 drive retaining latches

Procedure

1. If your spare kit includes an 80 mm replacement drive, remove the retaining latch from its current location.

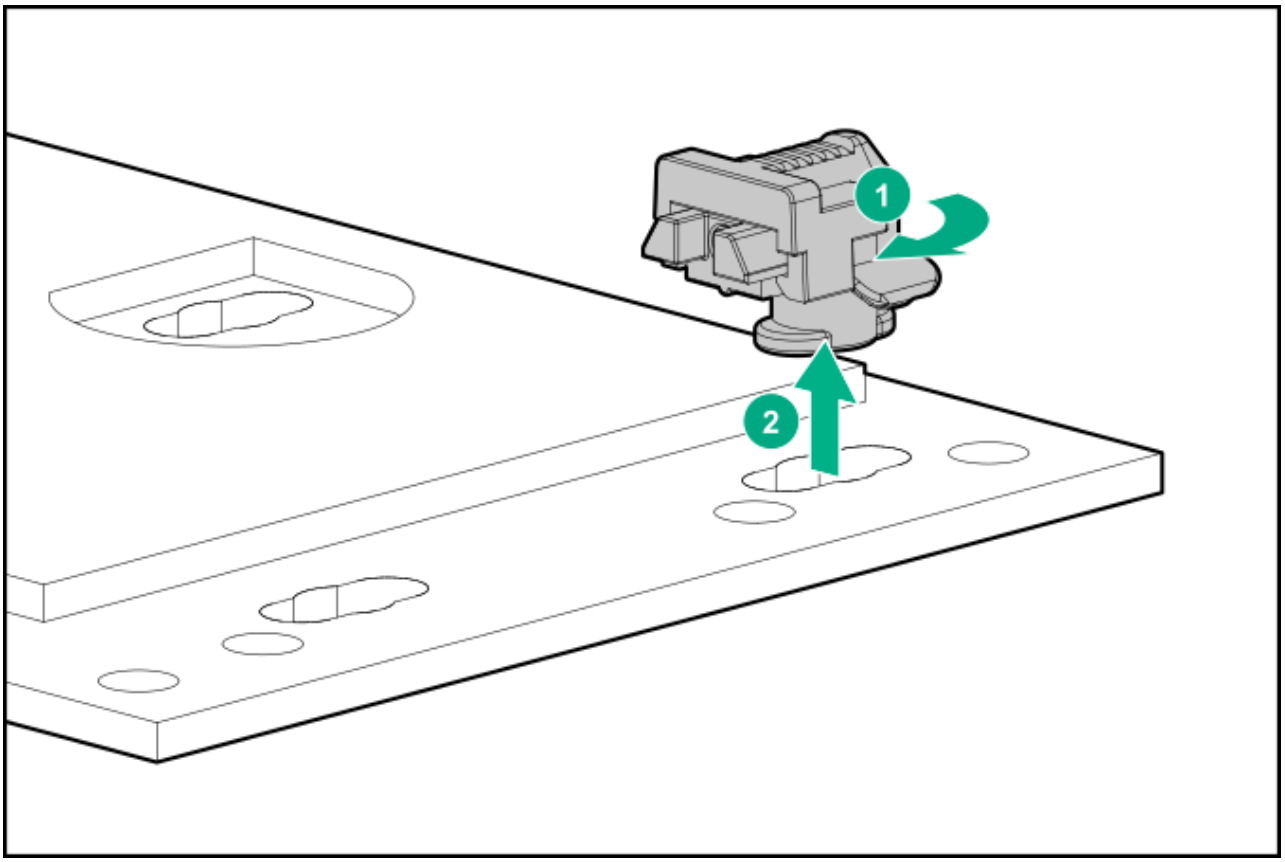

2. Install the retaining latch at the 80 mm drive location.

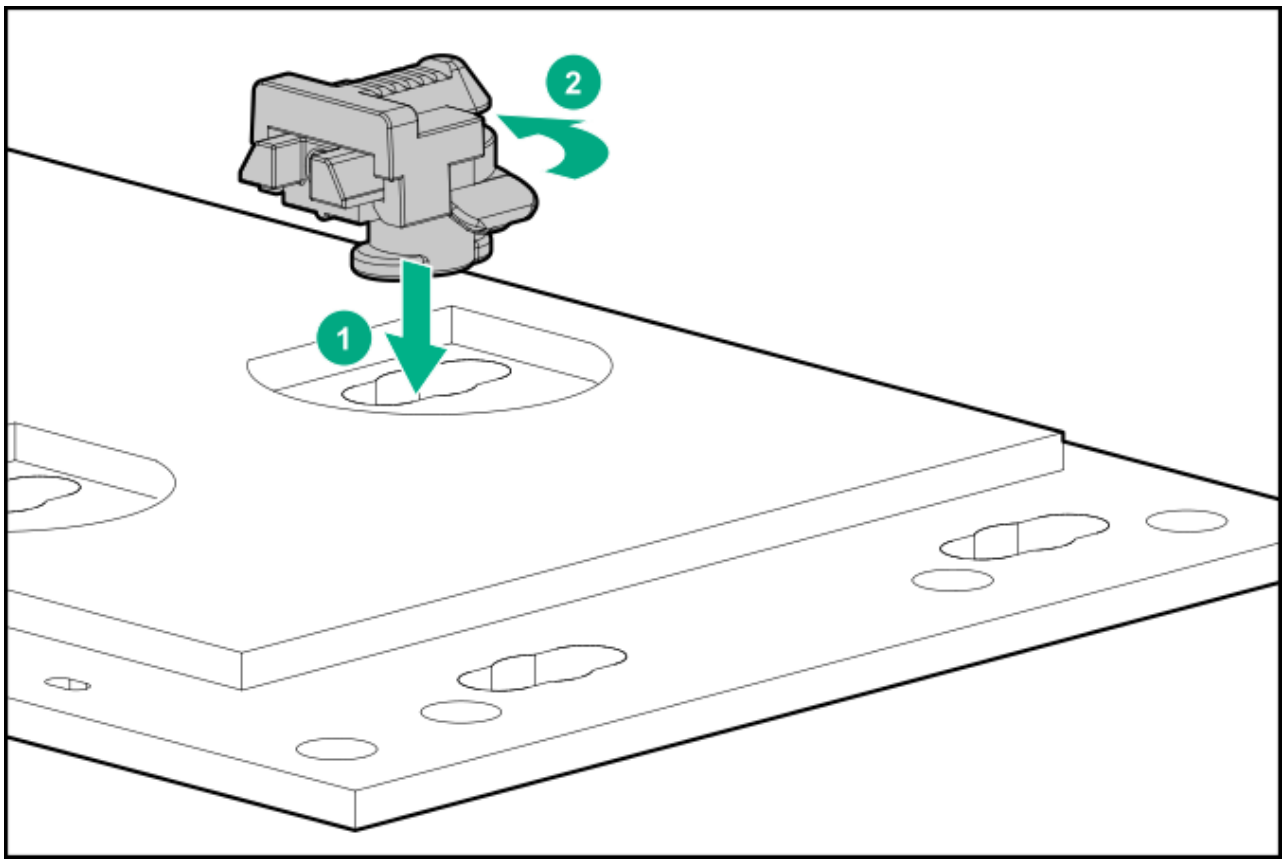

Removing and replacing a power supply

Prerequisites

Before removing the component, be sure to do the following:

- Verify the status of the power supply to be replaced by reviewing the Power supply LEDs .
- Be sure that your configuration can support your actions. If the proper redundancy is not in place, power down the server before beginning this procedure.

Procedure

1. Disconnect the AC power cord from the AC outlet and the power supply.
2. Remove the power supply.

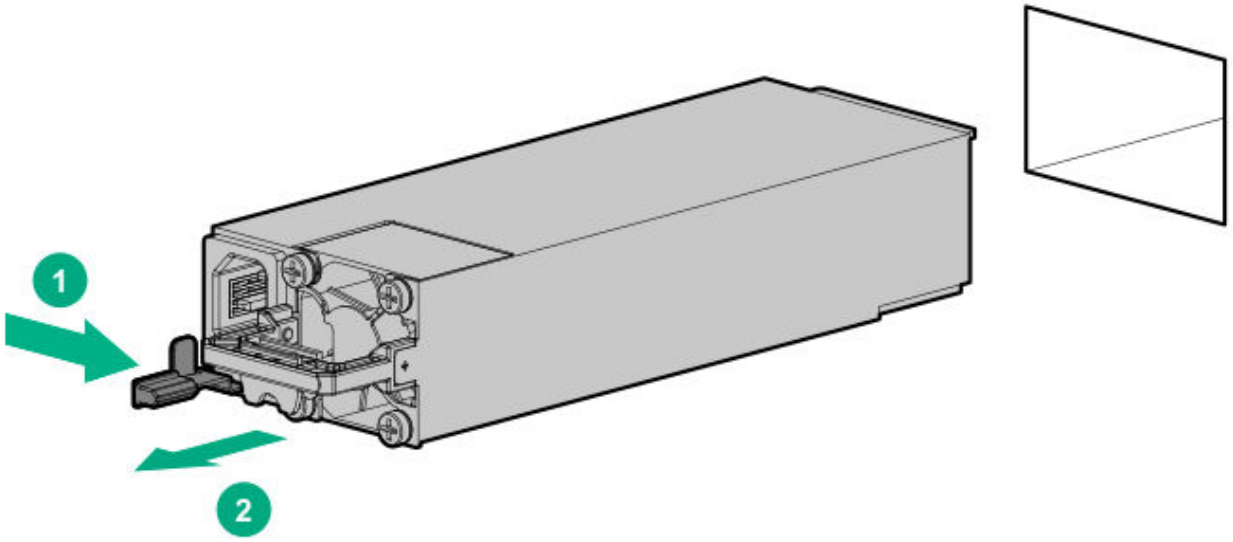

To replace the component, reverse the removal procedure.

Removing and replacing the power supply blank

CAUTION:

For proper cooling, be sure that a component or a component blank is always installed in each bay in the rear of the chassis. When replacing a component or blank, leave the bay empty for no more that 60 seconds. Failure to do so can disrupt airflow in the chassis.

Procedure

Remove the component as indicated.

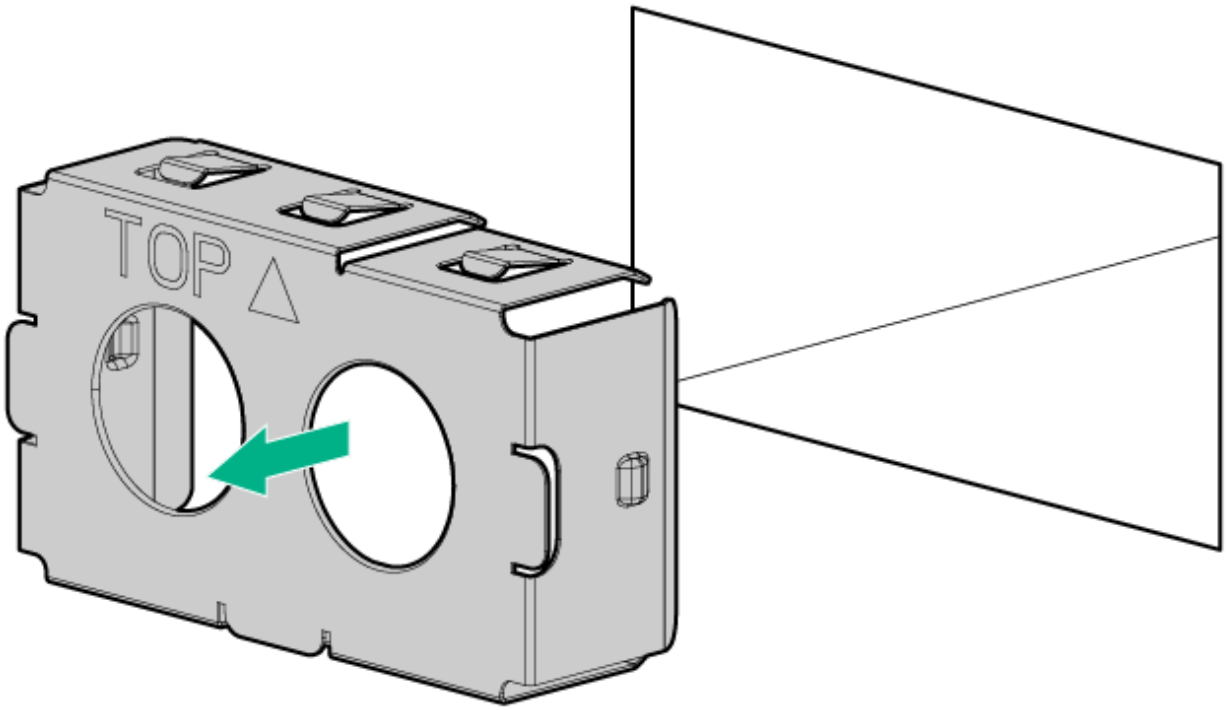

To replace the component, reverse the removal procedure.

Removing and replacing a drive

Procedure

1. Determine the status of the drive from the Low-profile LFF drive LED definitions.
2. Back up all data on the drive.
3. Extend the drive drawer from the chassis.

> **IMPORTANT:**
>
> Label the drives before removing them. The drives must be returned to their original locations.

4. Remove the drive.

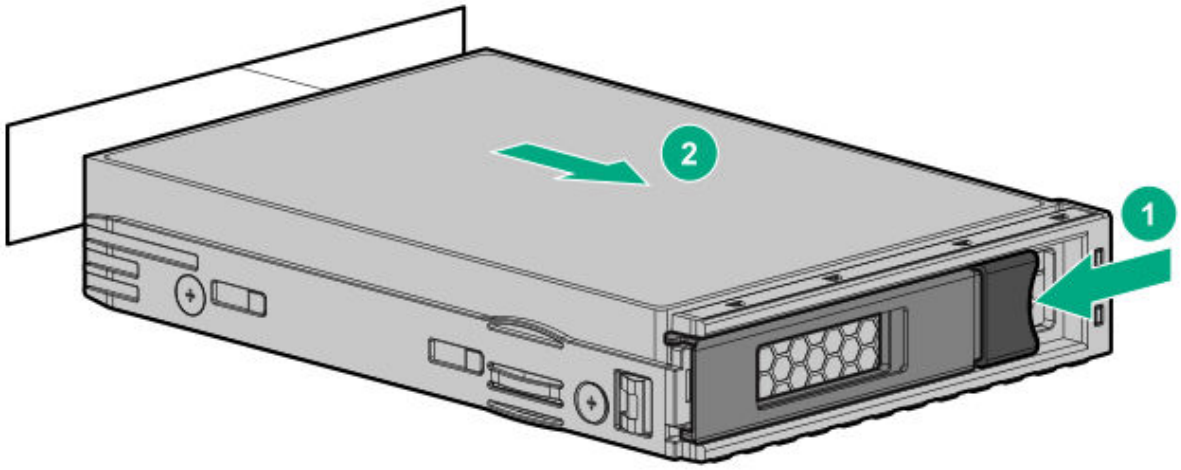

NOTE: To avoid damage to the device, do not use the removal handle to carry it.

CAUTION: To prevent improper cooling and thermal damage, do not operate the chassis unless all bays are populated with a component or a blank.

WARNING:

To reduce the risk of injury from electric shock, do not install more than one drive carrier at a time.

5. Prepare the low-profile LFF hot-plug drive for installation.

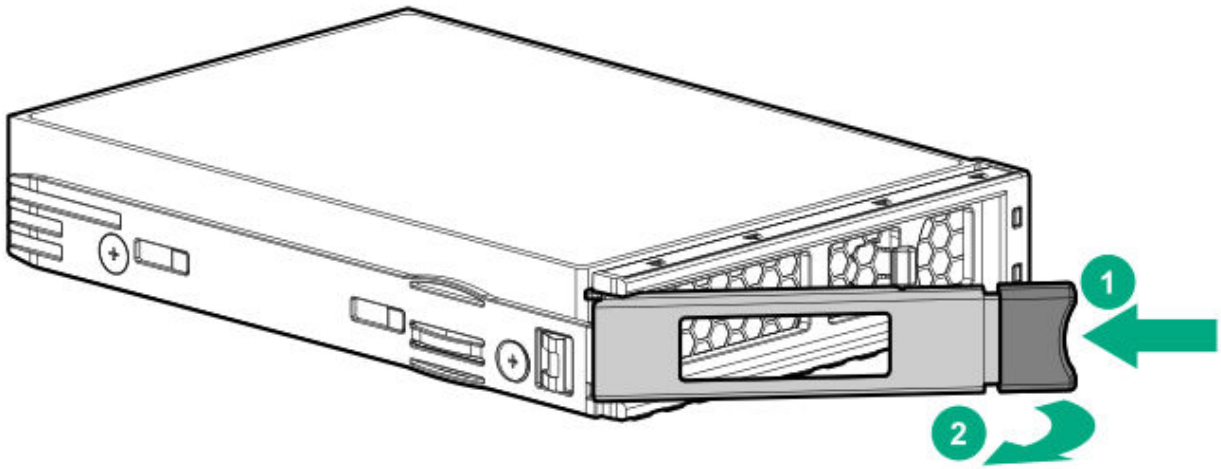

6. Install the low-profile LFF hot-plug drive in the drive drawer.

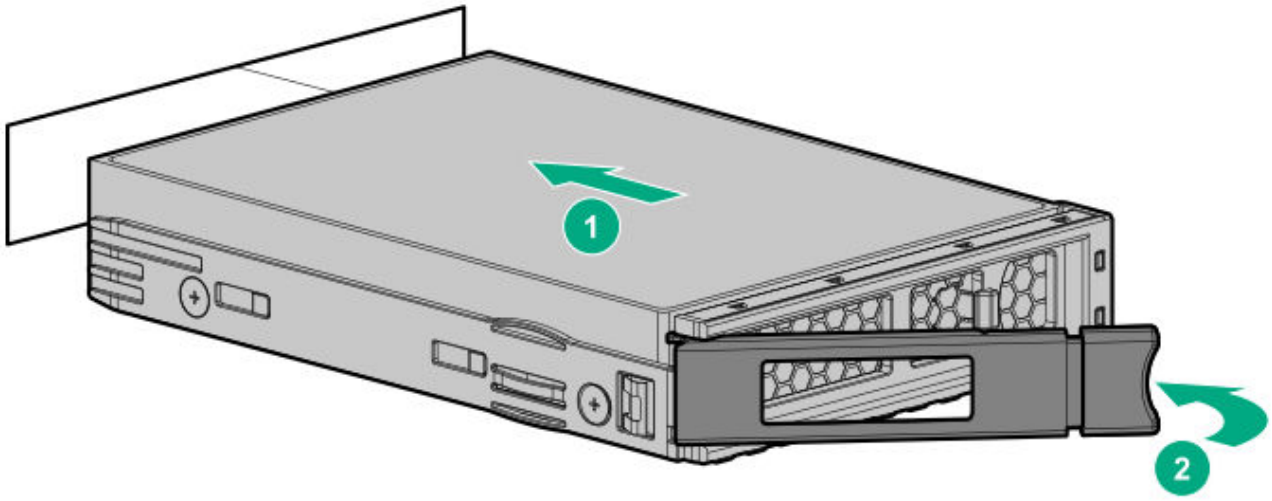

7. Determine the status of the drives using the drive LEDs on the storage display LEDs.

   For more information, see Low-profile LFF drive LED definitions.

Removing and replacing the drive blank

CAUTION: To prevent improper cooling and thermal damage, do not operate the chassis unless all bays are populated with a component or a blank.

Procedure

1. Extend the drive drawer from the chassis.
2. Remove the drive blank.

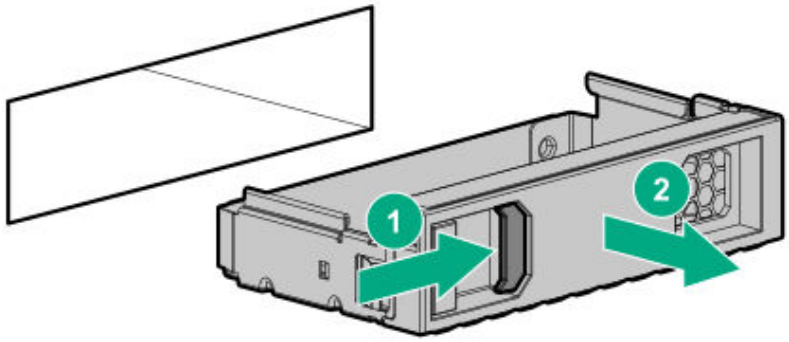

To replace the component, slide the component into the bay until it clicks.

Removing and replacing the system fan

IMPORTANT:

A fan module must be replaced within 60 seconds. Exceeding this period causes the system to gracefully shut down.

Procedure

1. Squeeze the release tab on the system fan to release it from the chassis.
2. Remove the system fan from the chassis.

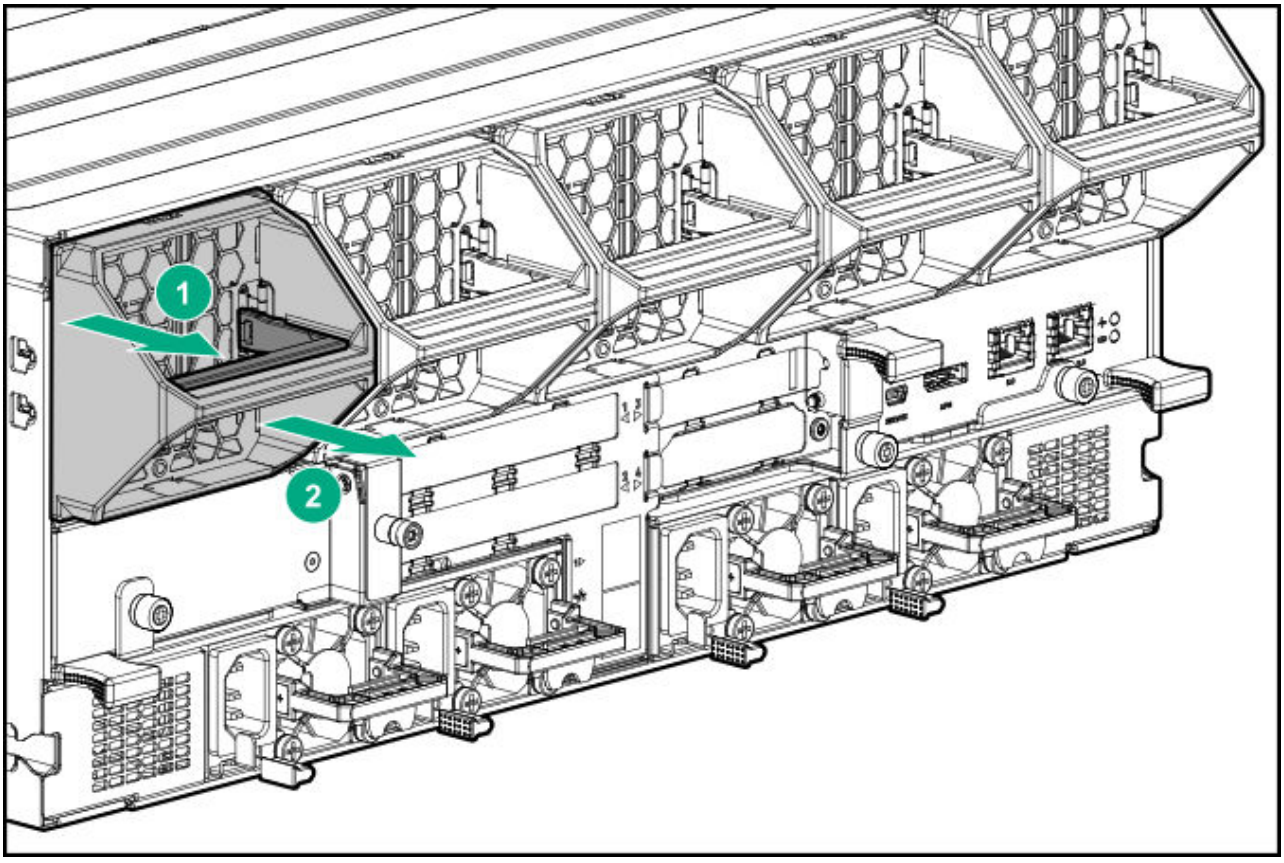

To replace the component, reverse the removal procedure.

Removing and replacing the HPE Smart Storage Battery

System ROM and firmware messages might display "energy pack" in place of "Smart Storage Battery." Energy pack refers to both HPE Smart Storage Batteries and HPE Smart Storage Hybrid Capacitors.

Procedure

1. Power down the server (Power down the server).
2. Remove the management module (Removing and replacing the management module).
3. Disconnect the HPE Smart Storage Battery cable.

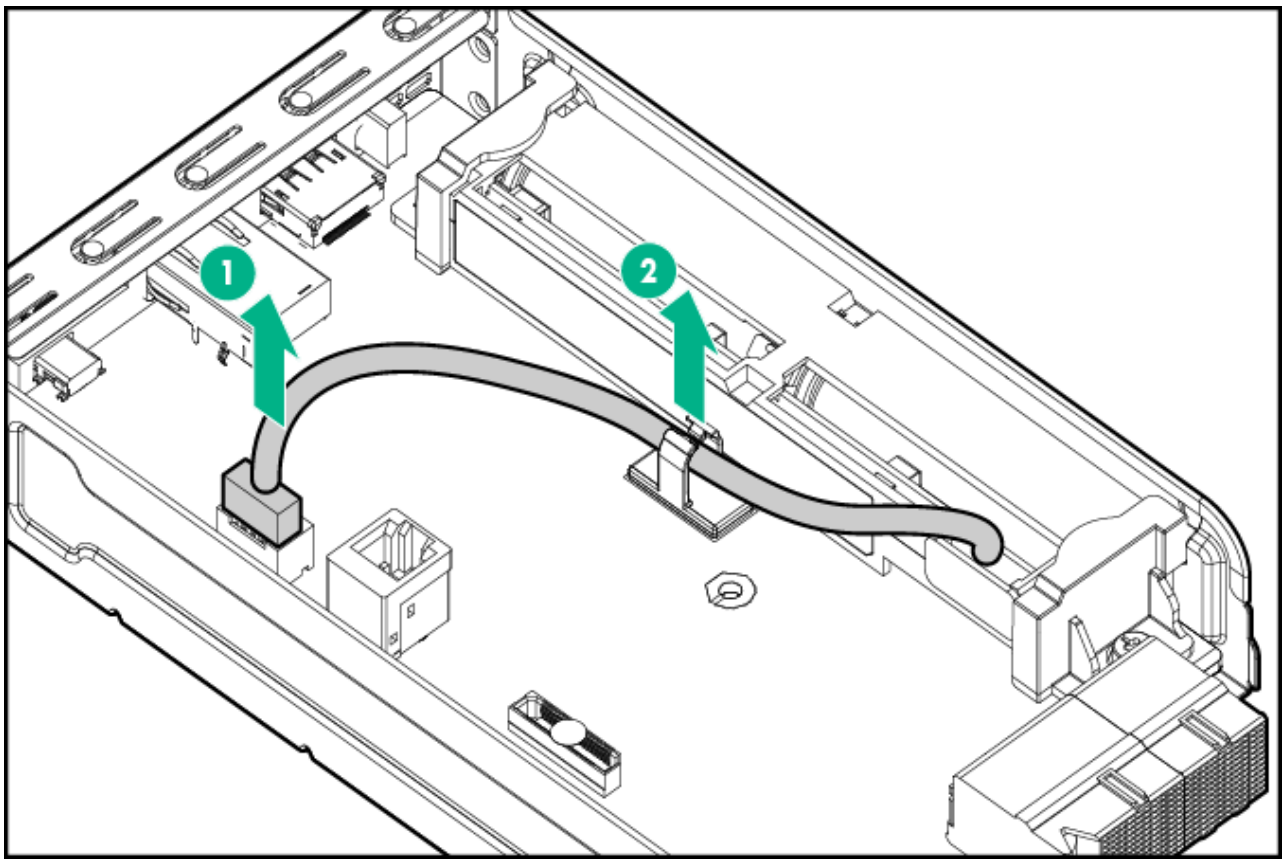

4. Remove the HPE Smart Storage Battery.

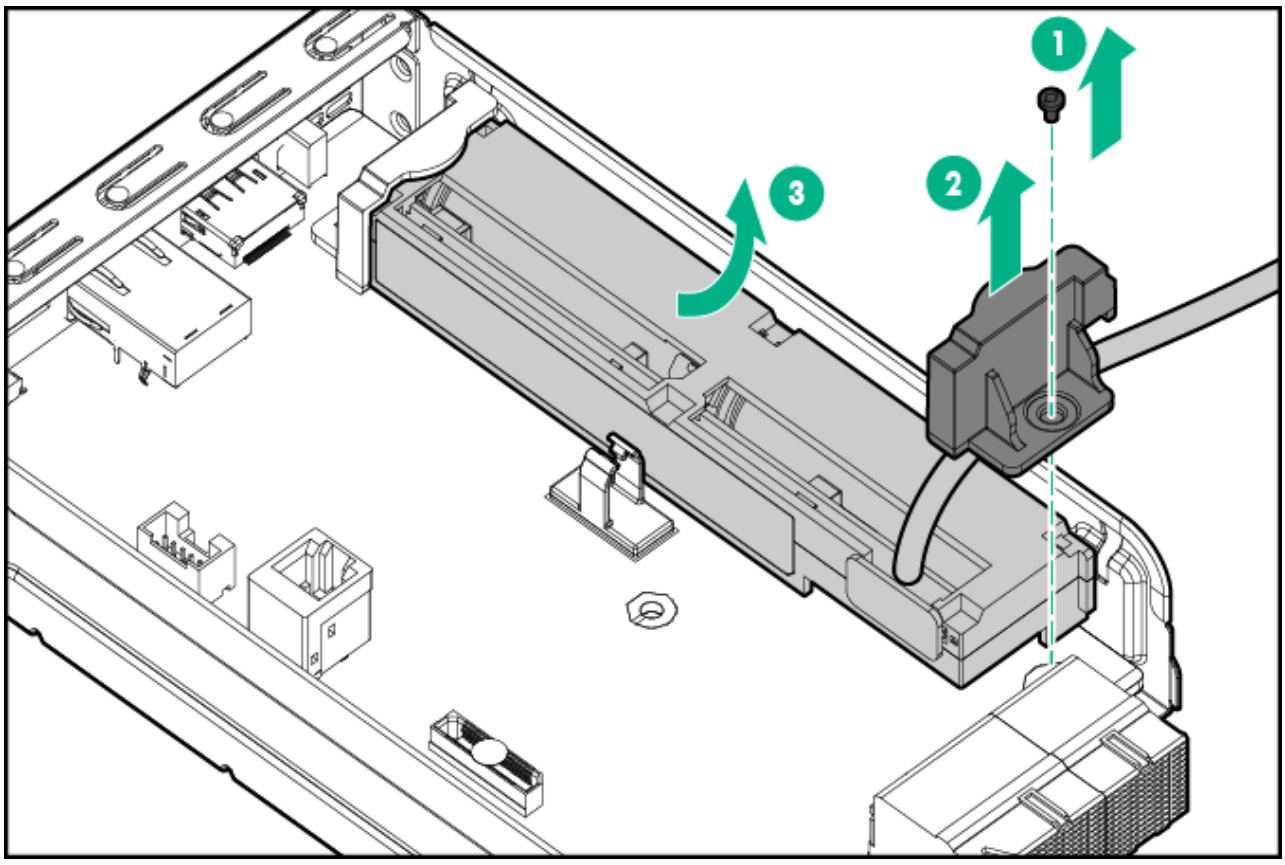

To replace the component:

1. Remove the cable clip.

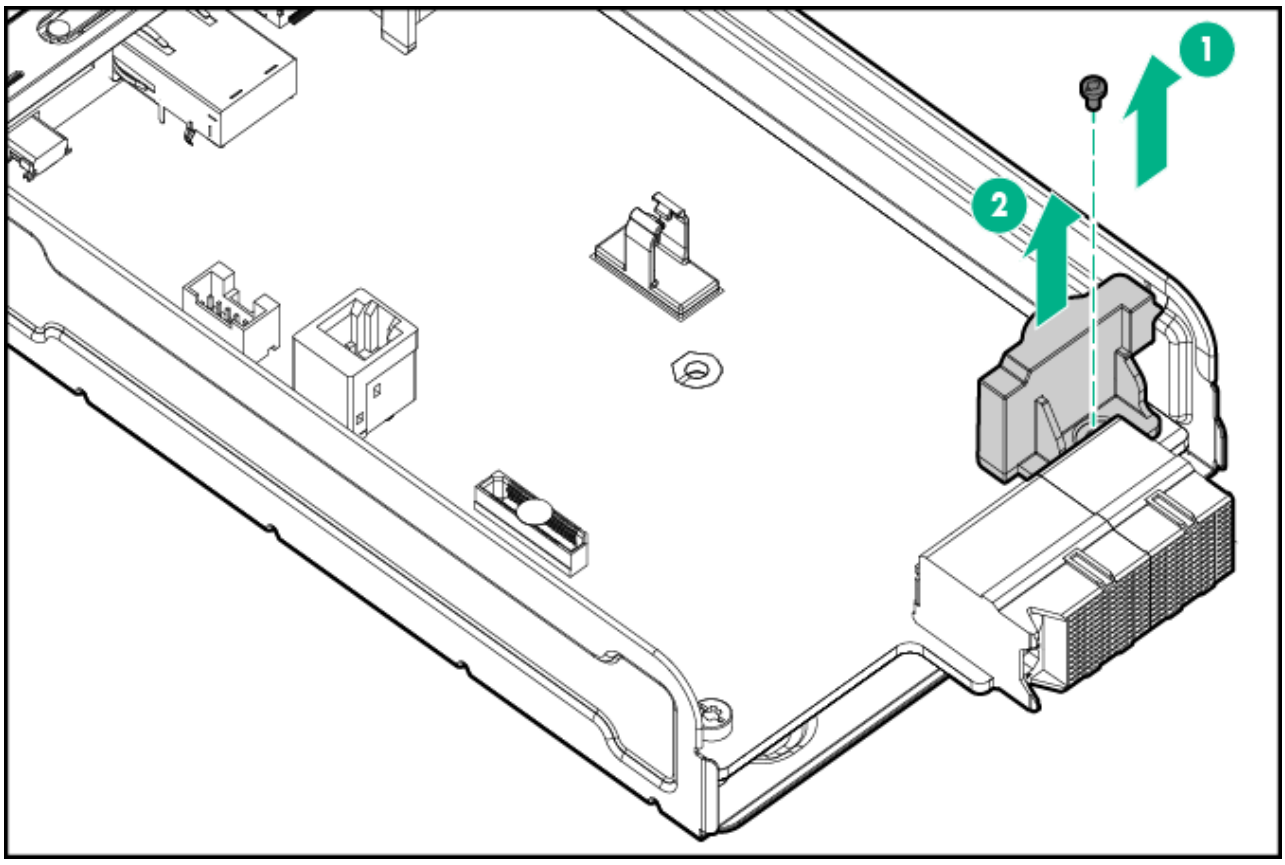

2. Install the Smart Storage Battery.

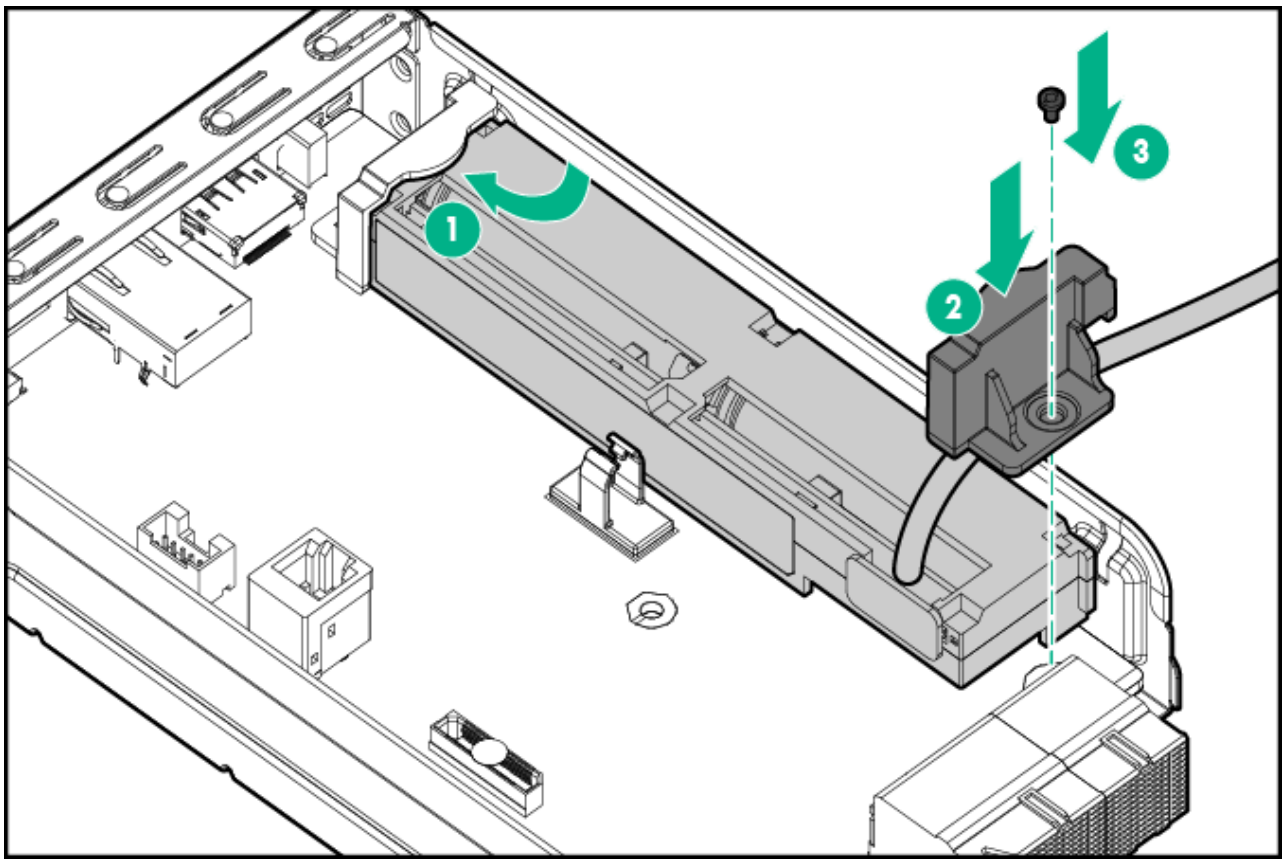

3. Connect the Smart Storage Battery cable to the Smart Storage Battery connector.

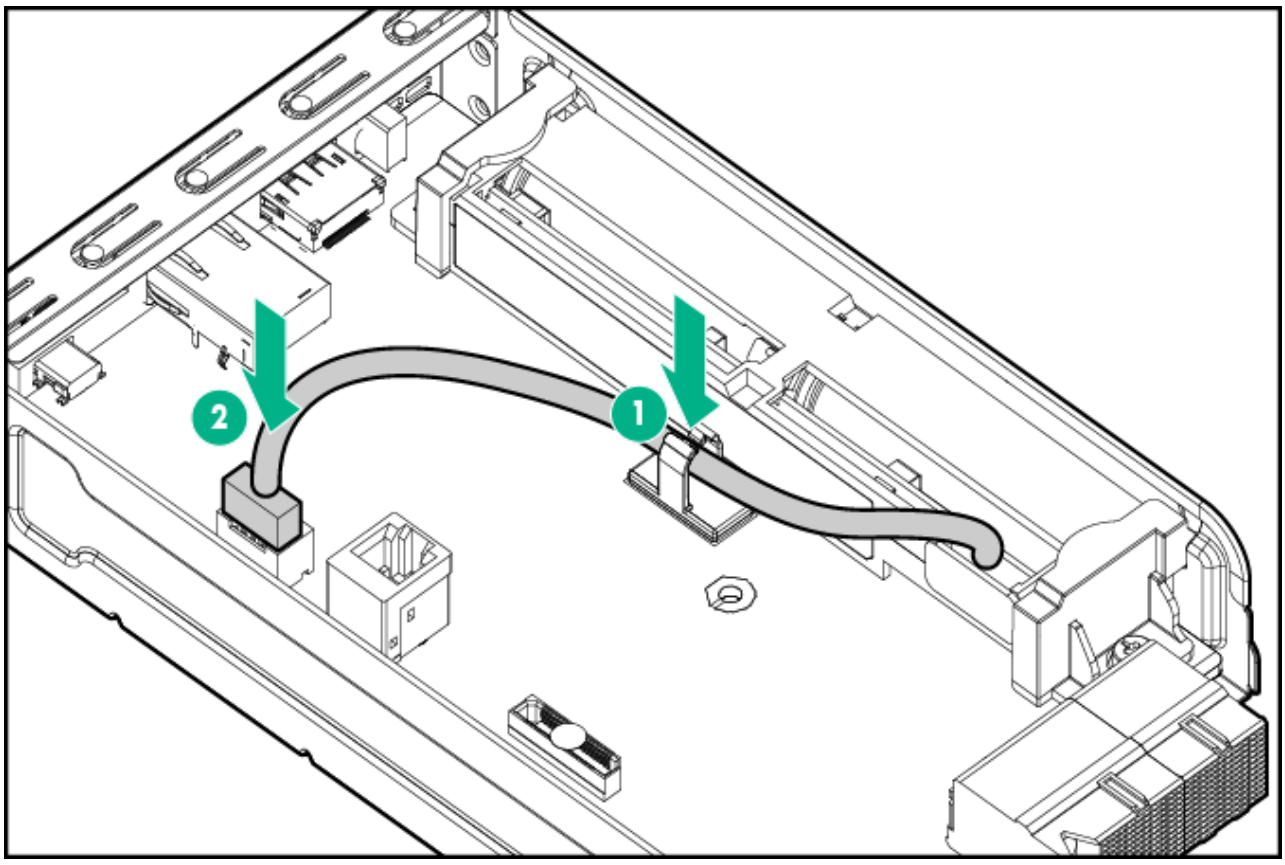

IMPORTANT:
To enable SmartCache or CacheCade in a type-p Smart Array controller, you must:

- Connect the controller backup power cable to the controller backup power connector on the system or riser board.
- Connect the energy pack cable to the connector on the I/O SAS board.

Removing a midplane assembly cover

Procedure

1. Power down the server.
2. Disconnect the power cables from the power supplies on the rear of the chassis.
3. Disconnect all cables that are connected to the ports on the rear of the chassis.

4. Remove the following components:
    a. Servers (Remove the server from the chassis)
    b. Power supplies (Removing and replacing a power supply)
    c. System fans (Removing and replacing the system fan)
    d. I/O module (Removing and replacing the I/O module)
    e. Management module (Removing and replacing the management module)
5. Remove the chassis from the rack.
6. Place the chassis on a flat, sturdy surface to support the chassis.
7. Remove the midplane assembly cover:
    a. Remove the five screws on the top.
    b. Remove the two screws on the sides.

> **CAUTION:**
>
> For proper cooling, do not operate the chassis with the midplane assembly cover removed as it might cause improper cooling and system shutdown.

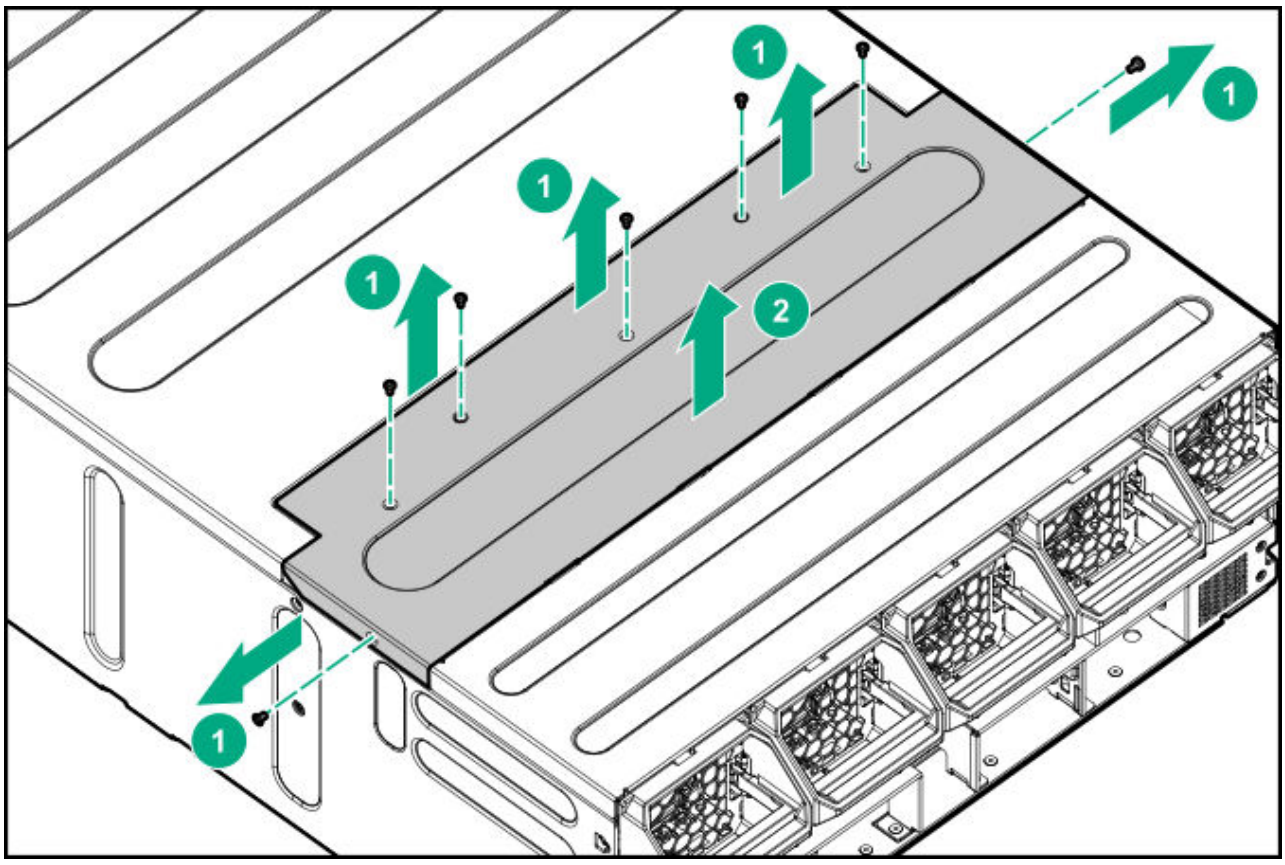

To replace the component, reverse the removal procedure.

Removing and replacing a midplane assembly

Removing a midplane assembly

IMPORTANT:
All components must be removed to service the midplane assembly.

Procedure

1. Power down the server.
2. Disconnect the power cables from the power supplies on the rear of the chassis.

3. Disconnect all cables that are connected to the ports on the rear of the chassis.
4. Remove the following components:
    a. Servers (Remove the server from the chassis)
    b. Power supplies (Removing and replacing a power supply)
    c. System fans (Removing and replacing the system fan)
    d. I/O module (Removing and replacing the I/O module)
    e. Management module (Removing and replacing the management module)
5. Remove the chassis from the rack.
6. Place the chassis on a flat, sturdy surface to support the chassis.
7. Remove the midplane assembly cover (Removing a midplane assembly cover).
8. Disconnect the four drive data cables that connect to the midplane.

    For drive cabling information, see Drive drawer cabling.
9. Disconnect the two fan cables that connect to the midplane.

    For fan cabling information, see Fan cabling.
10. Remove the midplane assembly from the chassis:
    a. Remove the two screws on the sides of the chassis.
    b. Lift the assembly straight up.

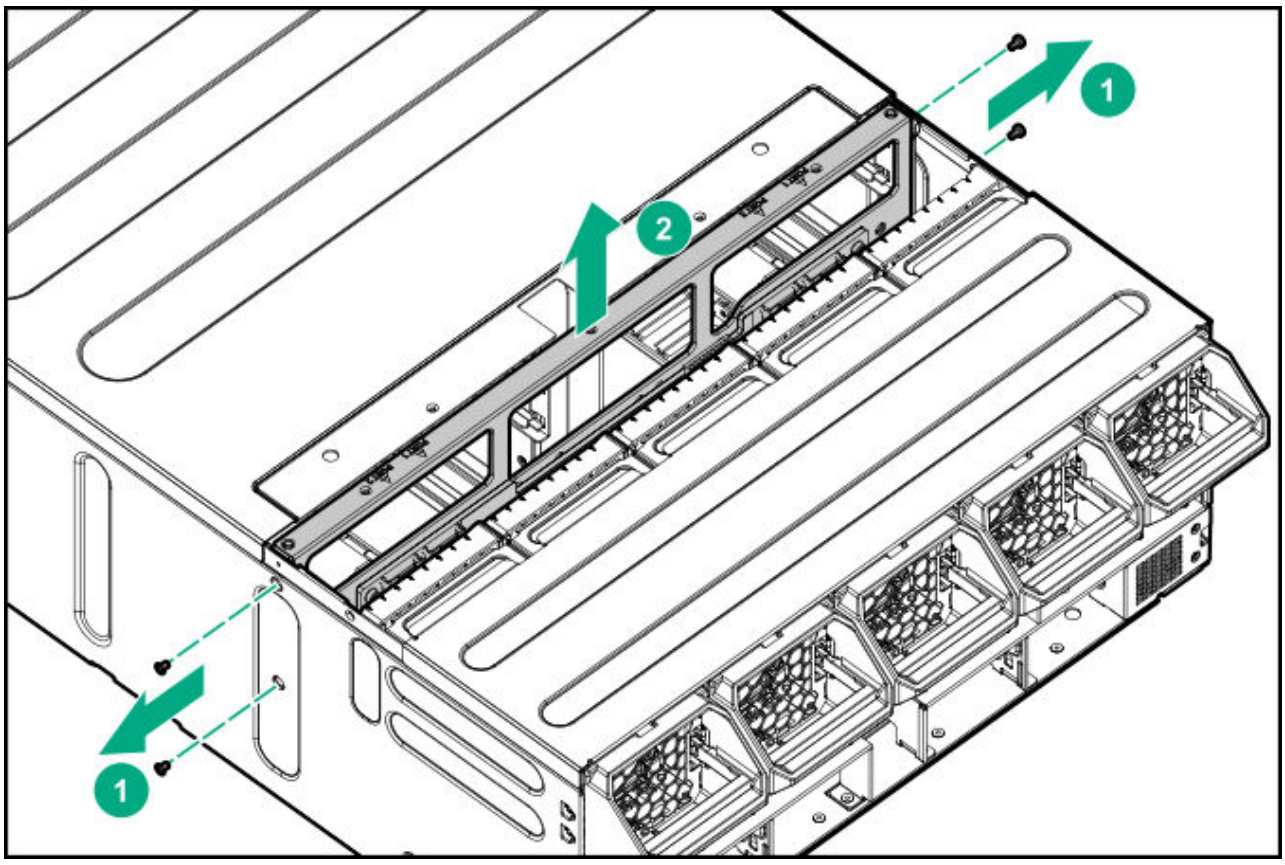

Replacing a midplane assembly

Procedure

1. Install the midplane assembly in the chassis, and then secure the assembly by installing the two screws on the sides of the chassis.

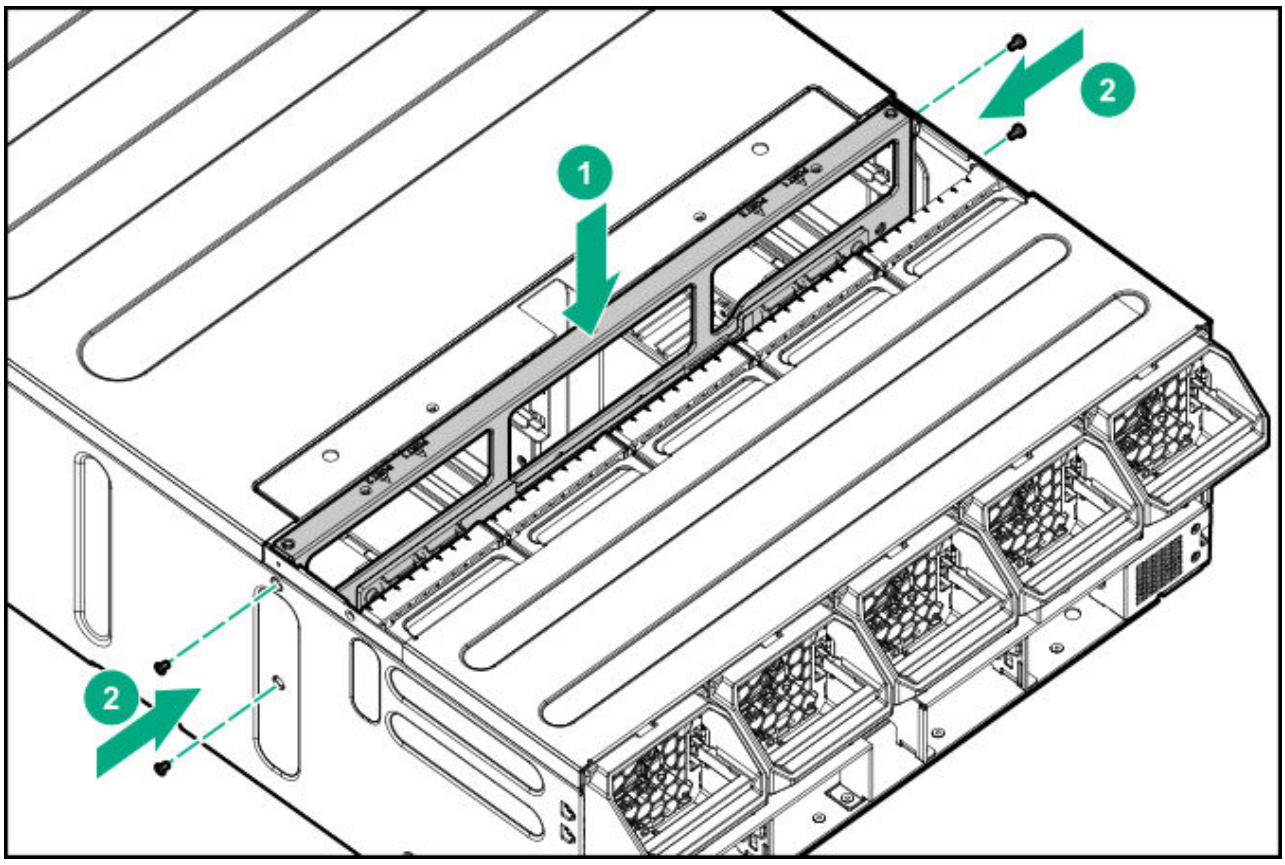

2. Connect the four drive data cables that connect to the midplane.

   For drive cabling information, see Drive drawer cabling.

3. Connect the two fan cables that connect to the midplane.

   For fan cabling information, see Fan cabling.

4. Install the midplane assembly cover by installing the five screws on the top and the two screws on the sides.

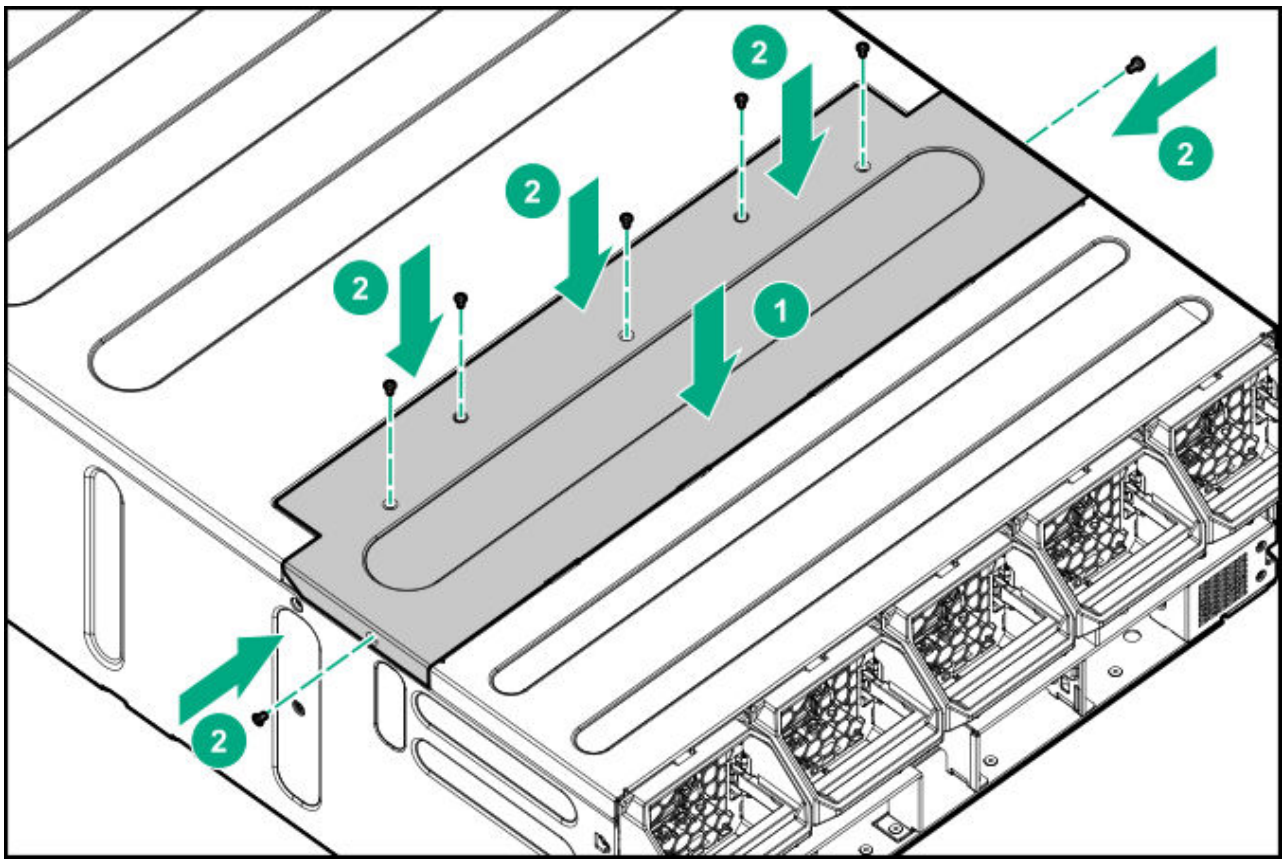

5. Install the chassis into the rack.
6. Install the following components:
   a. Servers (Remove the server from the chassis)
   b. Power supplies (Removing and replacing a power supply)
   c. System fans (Removing and replacing the system fan)
   d. I/O module (Removing and replacing the I/O module)
   e. Management module (Removing and replacing the management module)
7. Connect all cables that were disconnected from the ports on the rear of the chassis.
8. Connect the power cables to the power supplies on the rear of the chassis.
9. Power up the server.

Removing and replacing a fan louver

Procedure

1. Power down the server.
2. Remove the midplane assembly cover (Removing a midplane assembly cover).
3. Remove the fan louver.

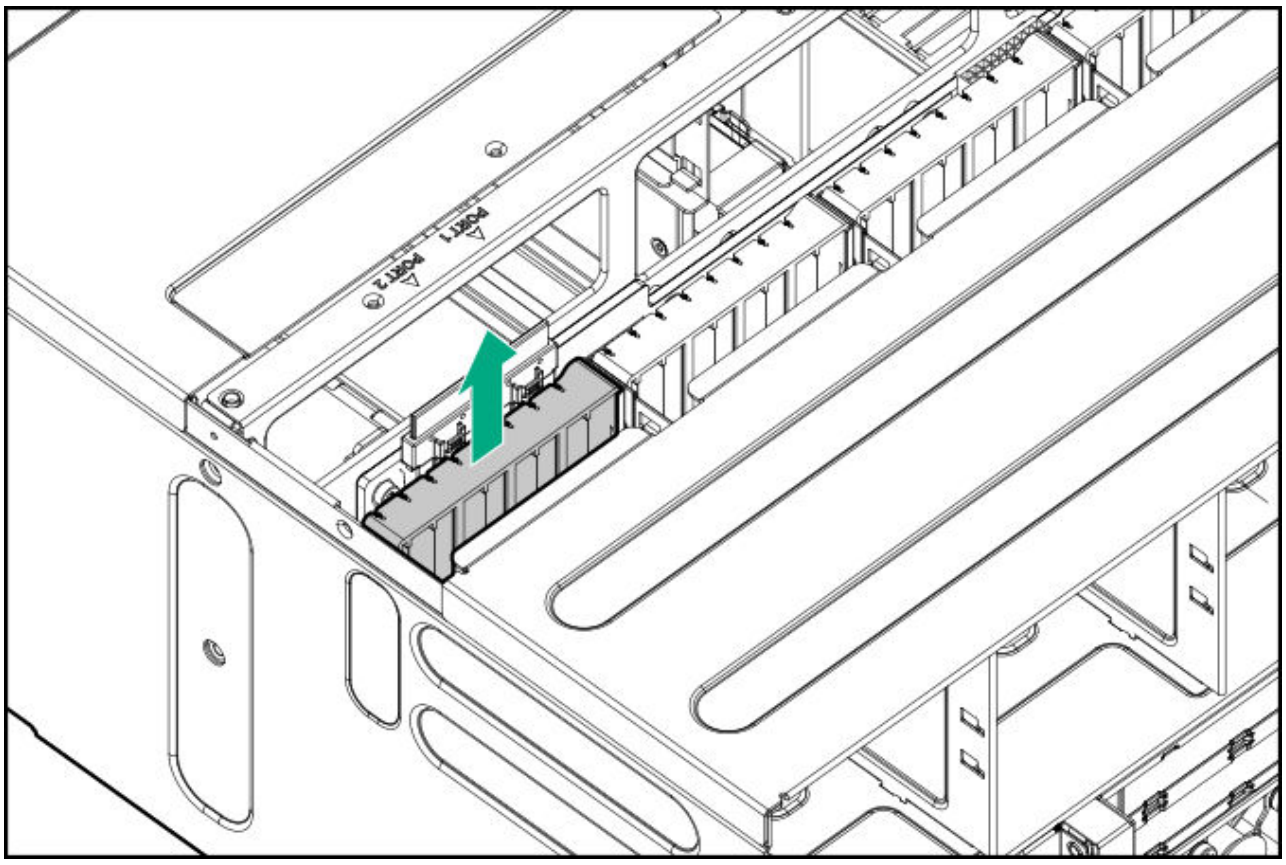

To replace the component, reverse the removal procedure.

Removing and replacing the drive drawer assembly

Procedure

1. Extend the drive drawer from the chassis.
2. Remove all drives from the drawer (Removing and replacing a drive).

3. Release the rails together, and then extend the drive drawer further.

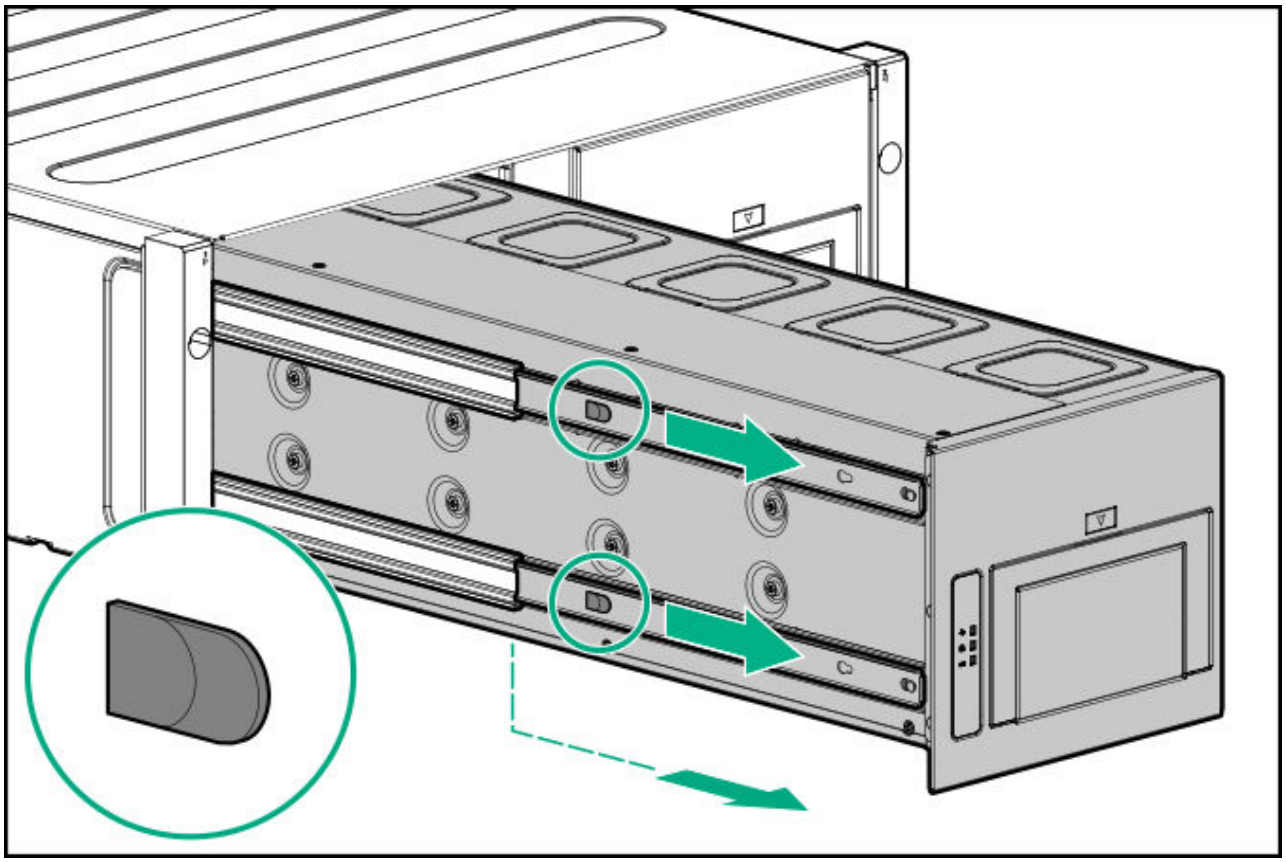

4. Remove the cable retention bracket.

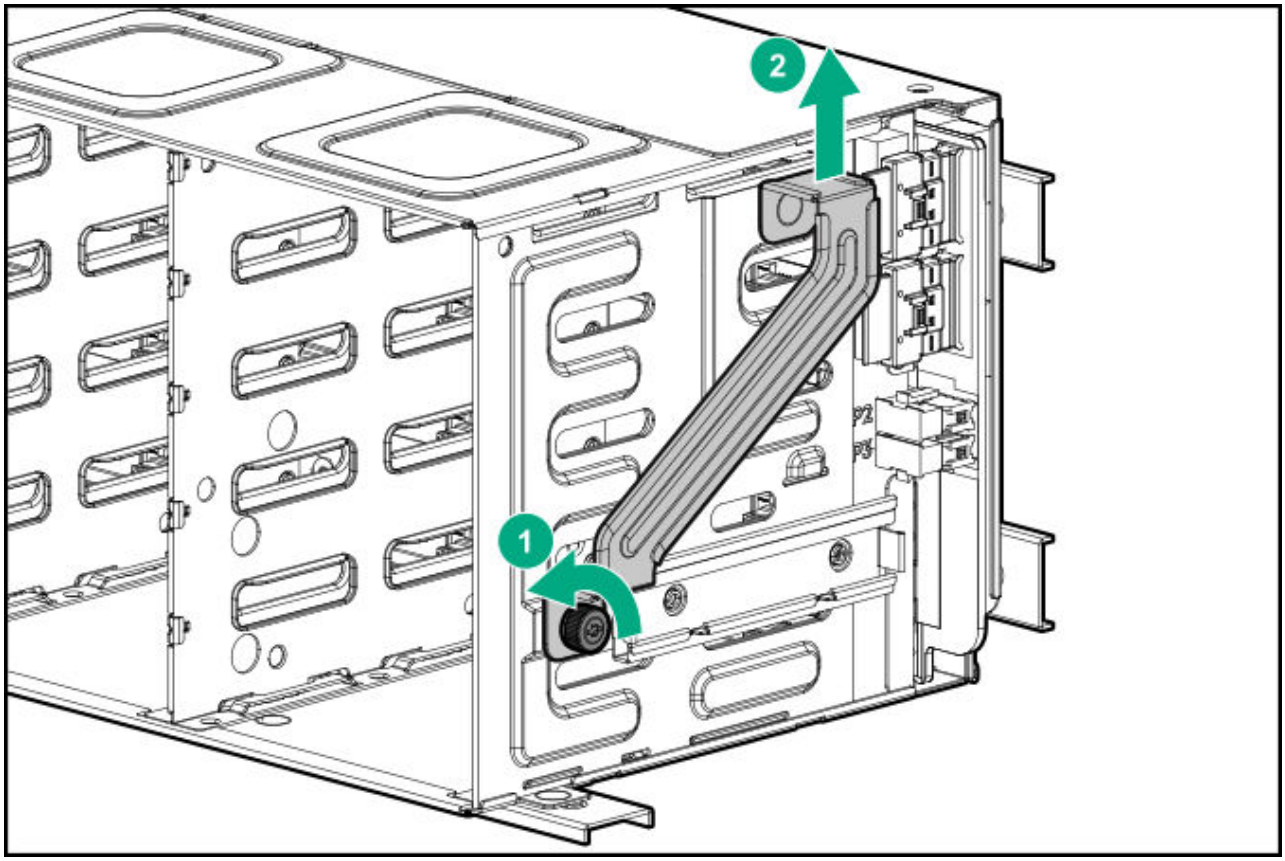

5. Disconnect the drive cables.

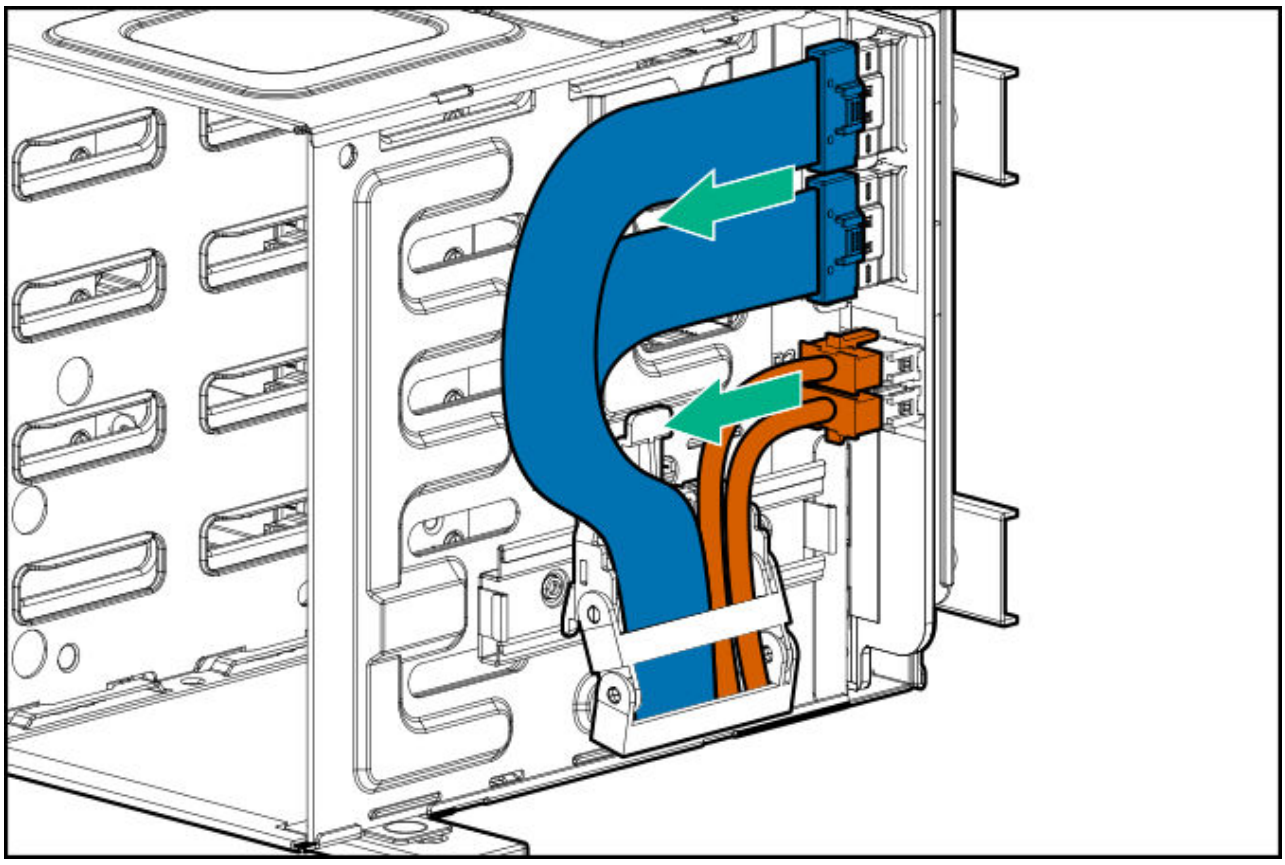

6. Remove the cable retention clip.

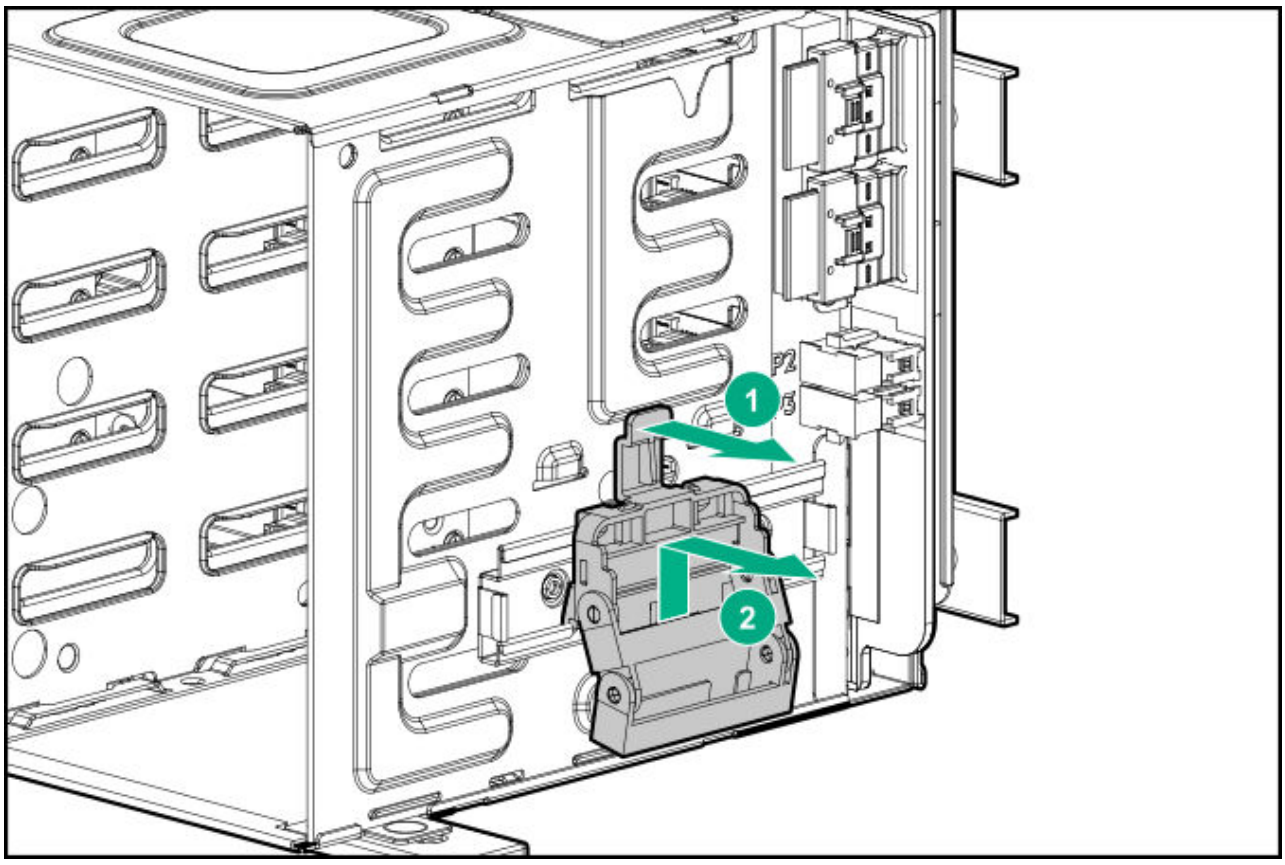

7. Remove the drive drawer from the rails.

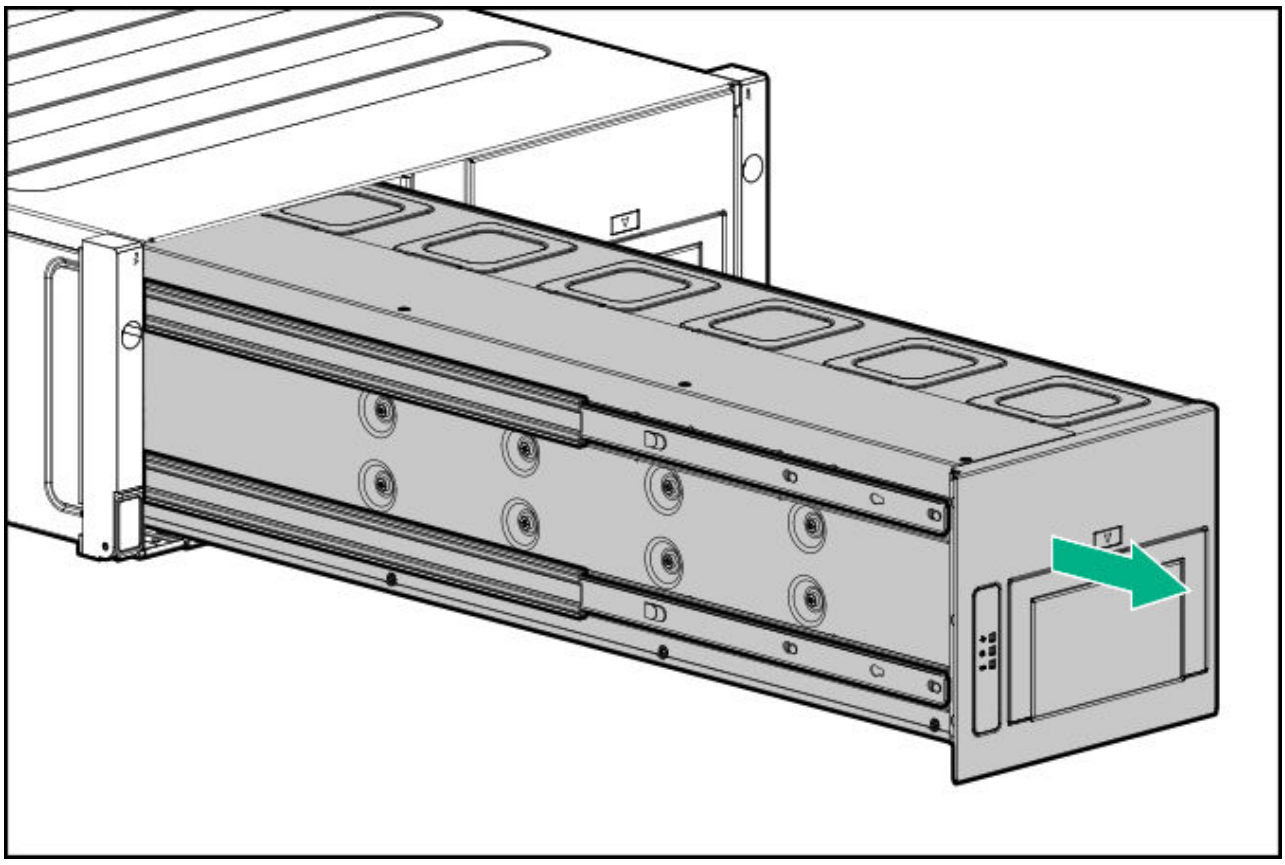

8. Extend the rails, and then remove the outer rail screws.

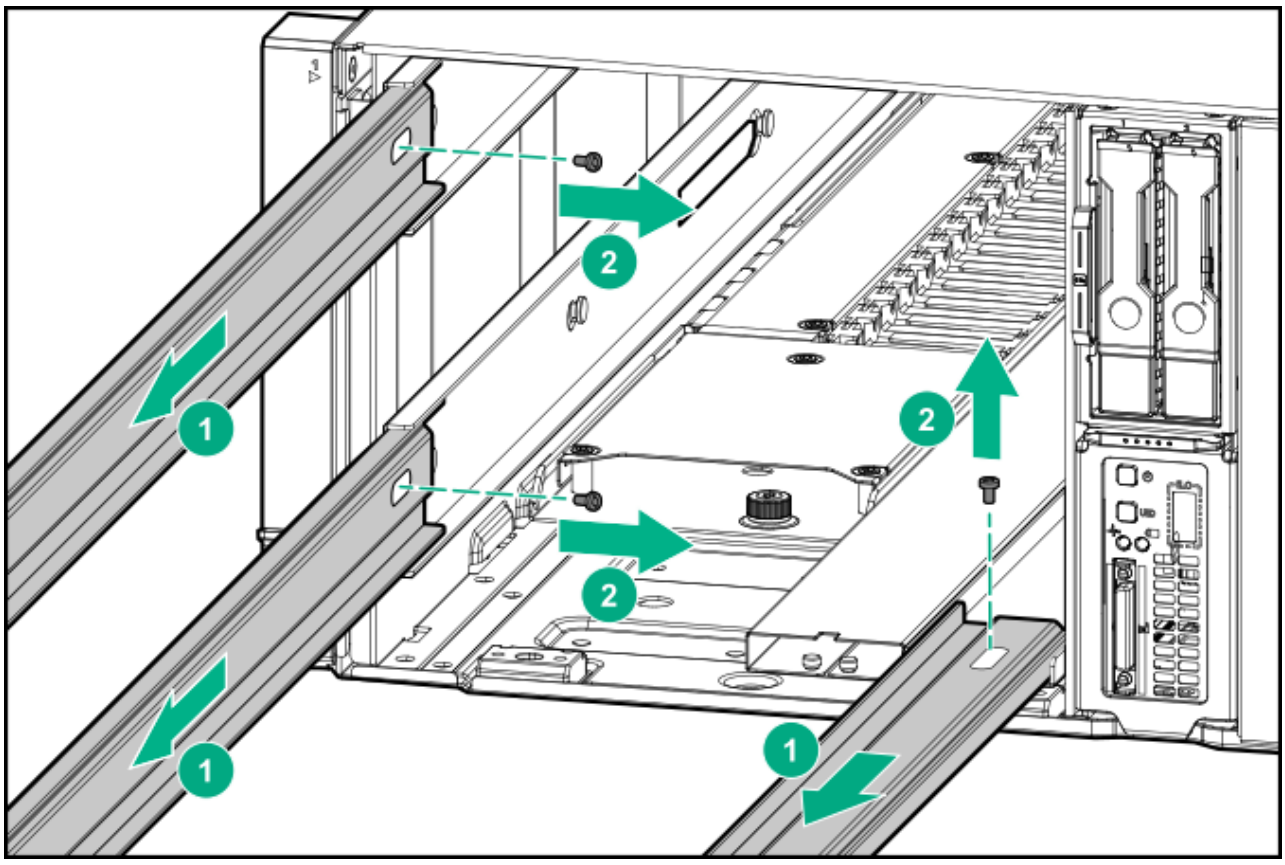

9. Remove the outer rail latch, and then remove the rails.

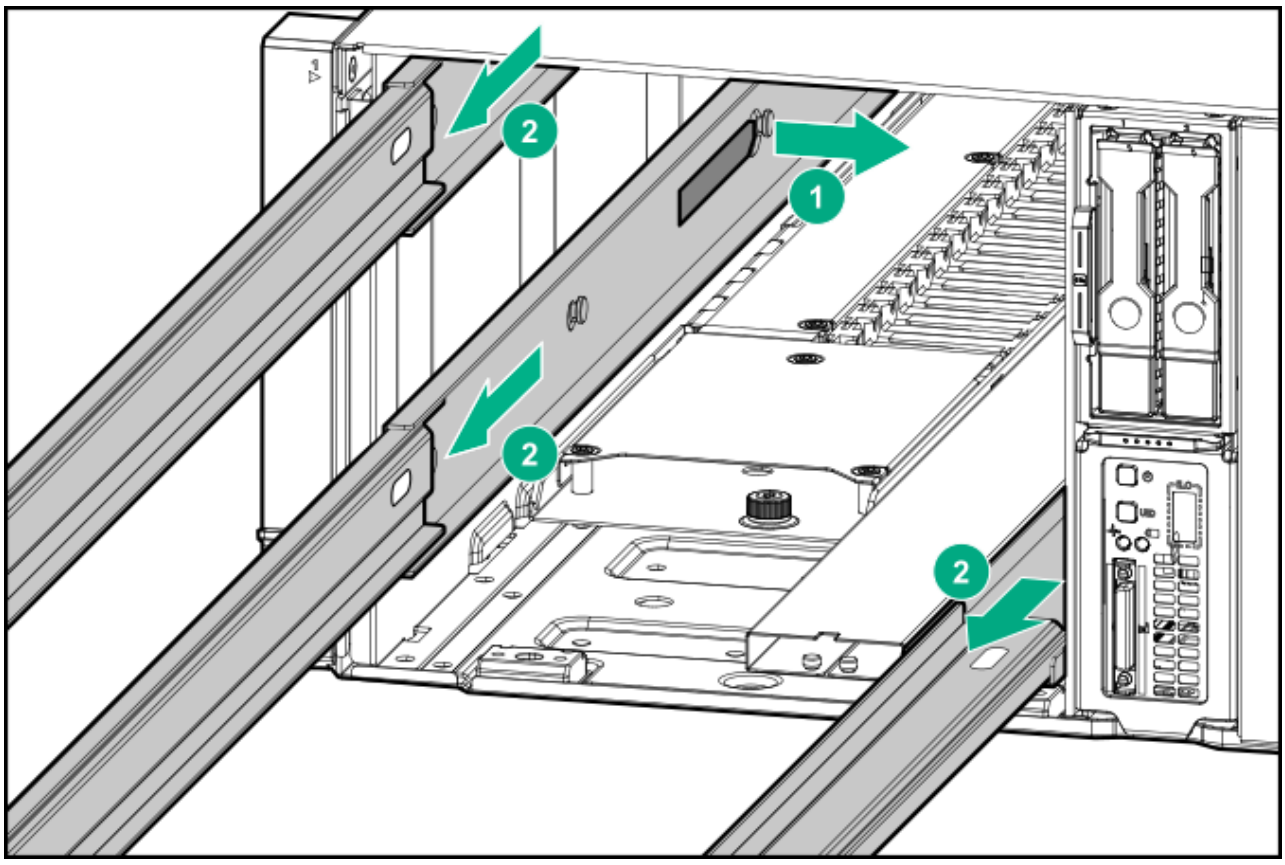

.0. Remove the drive drawer bottom rail.

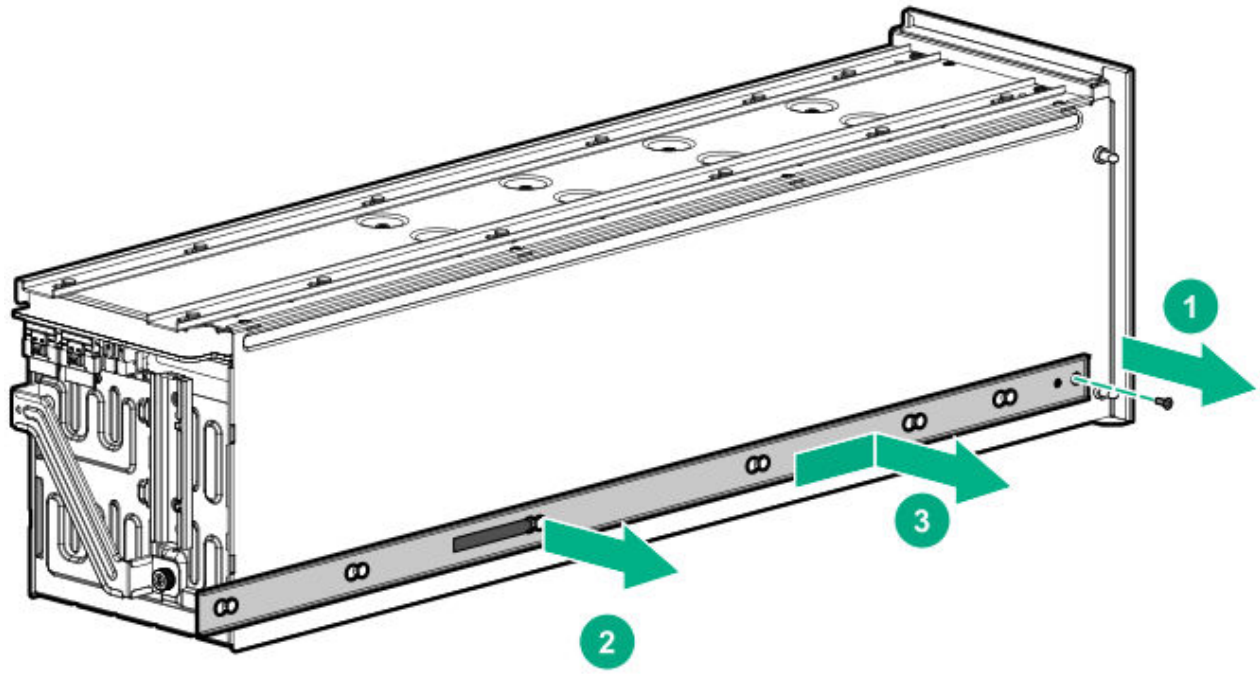

.1. Remove the drive drawer backplane bracket.

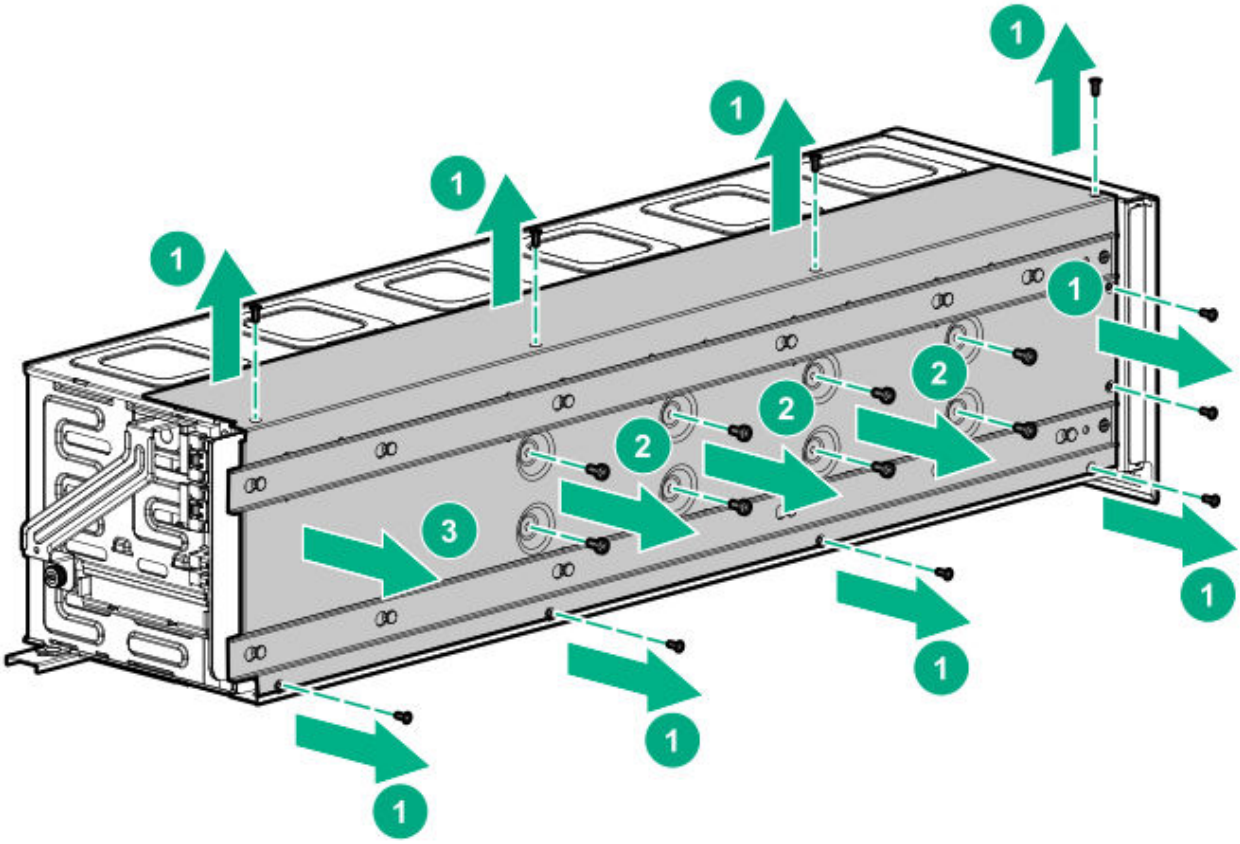

.2. Remove the rails from the drive drawer backplane.

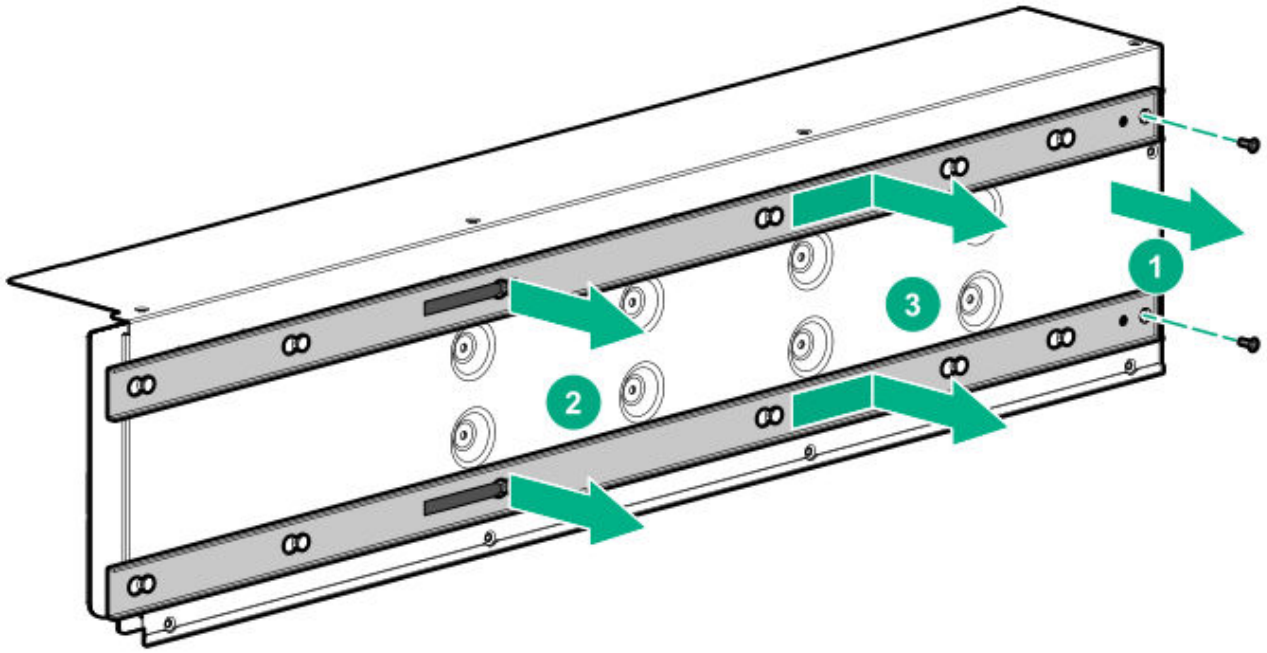

To replace the component, reverse the removal procedure.

Removing and replacing the drive drawer cable track

Procedure

1. Extend the drive drawer from the chassis.
2. Remove all drives from the drawer (Removing and replacing a drive).
3. Remove the drive drawer assembly (Removing and replacing the drive drawer assembly).
4. Remove the midplane assembly (Removing and replacing a midplane assembly).
5. Remove the cable track.

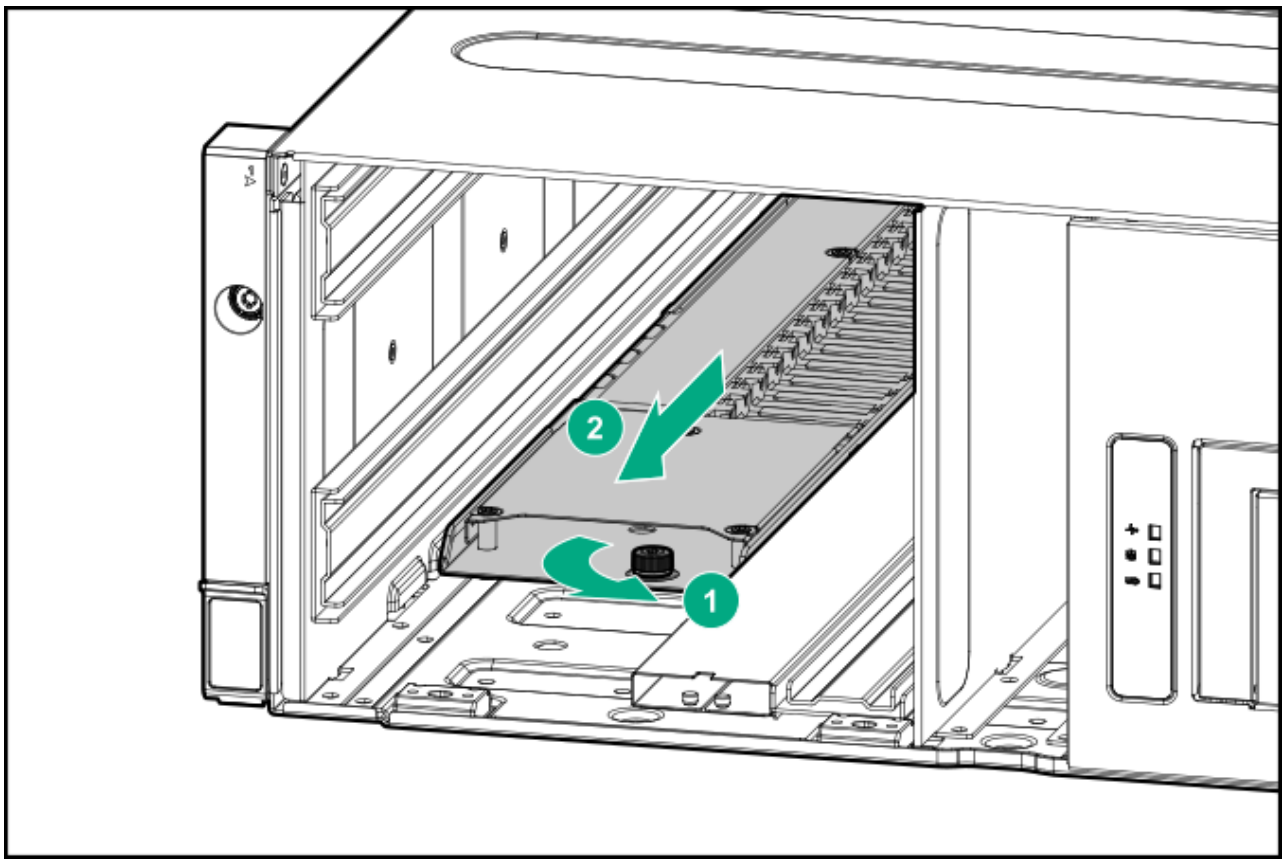

To replace the component, reverse the removal procedure.

Removing and replacing the chassis lift handles

Procedure

1. Power down the server.
2. Remove the chassis lift handles from the chassis.

   Do not remove the chassis handles until the weight of the chassis is resting on the rails.

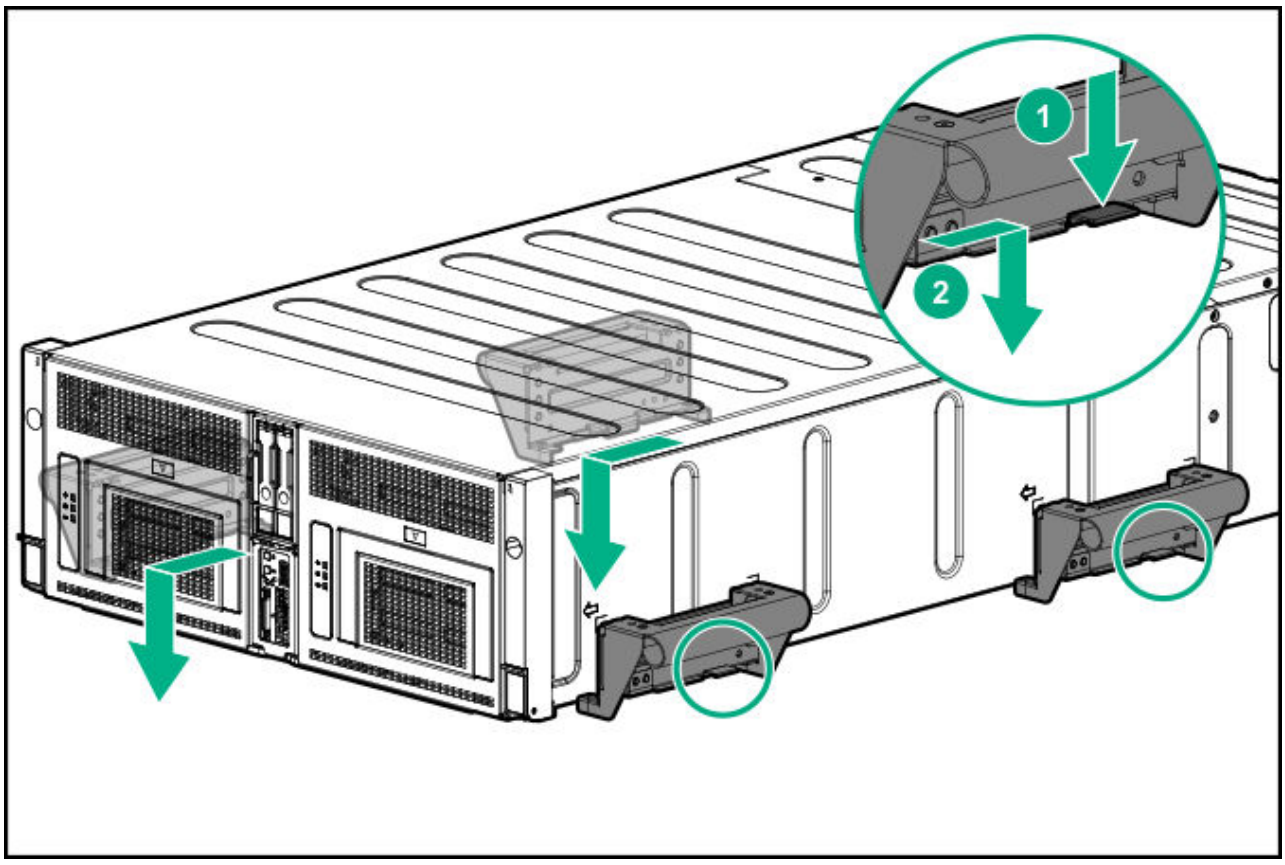

To replace the component, reverse the removal procedure.

Troubleshooting

Troubleshooting resources

Troubleshooting resources are available for HPE Gen10 and Gen10 Plus server products in the following documents:

- Troubleshooting Guide for HPE ProLiant Gen10 and Gen10 Plus servers provides procedures for resolving common problems and comprehensive courses of action for fault isolation and identification, issue resolution, and software maintenance.
- Error Message Guide for HPE ProLiant Gen10 servers and HPE Synergy provides a list of error messages and information to assist with interpreting and resolving error messages.

- Error Message Guide for HPE ProLiant Gen10 Plus servers and HPE Synergy provides a list of error messages and information to assist with interpreting and resolving error messages.
- Integrated Management Log Messages and Troubleshooting Guide for HPE ProLiant Gen10 and Gen10 Plus servers and HPE Synergy provides IML messages and associated troubleshooting information to resolve critical and cautionary IML events.

To access troubleshooting resources for your product, see the **Hewlett Packard Enterprise website**.

Diagnostic tools

Product QuickSpecs

For more information about product features, specifications, options, configurations, and compatibility, see the product QuickSpecs on the Hewlett Packard Enterprise website (**https://www.hpe.com/info/qs**).

UEFI System Utilities

The UEFI System Utilities is embedded in the system ROM. Its features enable you to perform a wide range of configuration activities, including:

- Configuring system devices and installed options.
- Enabling and disabling system features.
- Displaying system information.
- Selecting the primary boot controller or partition.
- Configuring memory options.
- Launching other preboot environments.

HPE servers with UEFI can provide:

- Support for boot partitions larger than 2.2 TB. Such configurations could previously only be used for boot drives when using RAID solutions.

- Secure Boot that enables the system firmware, option card firmware, operating systems, and software collaborate to enhance platform security.
- UEFI Graphical User Interface (GUI)
- An Embedded UEFI Shell that provides a preboot environment for running scripts and tools.
- Boot support for option cards that only support a UEFI option ROM.

Selecting the boot mode

This server provides two **Boot Mode** configurations: UEFI Mode and Legacy BIOS Mode. Certain boot options require that you select a specific boot mode. By default, the boot mode is set to **UEFI Mode**. The system must boot in **UEFI Mode** to use certain options, including:

- Secure Boot, UEFI Optimized Boot, Generic USB Boot, IPv6 PXE Boot, iSCSI Boot, NVMe Boot and Boot from URL
- Fibre Channel/FCoE Scan Policy

> **NOTE:**
> The boot mode you use must match the operating system installation. If not, changing the boot mode can impact the ability of the server to boot to the installed operating system.

Prerequisite

When booting to **UEFI Mode**, leave **UEFI Optimized Boot** enabled.

Procedure

1. From the **System Utilities** screen, select **System Configuration > BIOS/Platform Configuration (RBSU) > Boot Options > Boot Mode**.
2. Select a setting.
   - **UEFI Mode** (default)—Configures the system to boot to a UEFI compatible operating system.
   - **Legacy BIOS Mode**—Configures the system to boot to a traditional operating system in Legacy BIOS compatibility mode.
3. Save your setting.
4. Reboot the server.

Secure Boot

Secure Boot is a server security feature that is implemented in the BIOS and does not require special hardware. Secure Boot ensures that each component launched during the boot process is digitally signed and that the signature is validated against a set of trusted certificates embedded in the UEFI BIOS. Secure Boot validates the software identity of the following components in the boot process:

- UEFI drivers loaded from PCIe cards
- UEFI drivers loaded from mass storage devices
- Preboot UEFI Shell applications
- OS UEFI boot loaders

When Secure Boot is enabled:

- Firmware components and operating systems with boot loaders must have an appropriate digital signature to execute during the boot process.
- Operating systems must support Secure Boot and have an EFI boot loader signed with one of the authorized keys to boot. For more information about supported operating systems, see **https://www.hpe.com/servers/ossupport**.

You can customize the certificates embedded in the UEFI BIOS by adding or removing your own certificates, either from a management console directly attached to the server, or by remotely connecting to the server using the iLO Remote Console.

You can configure Secure Boot:

- Using the **System Utilities** options described in the following sections.
- Using the iLO RESTful API to clear and restore certificates. For more information, see the Hewlett Packard Enterprise website (**https://www.hpe.com/info/redfish**).
- Using the `secboot` command in the Embedded UEFI Shell to display Secure Boot databases, keys, and security reports.

Launching the Embedded UEFI Shell

Use the **Embedded UEFI Shell** option to launch the Embedded UEFI Shell. The Embedded UEFI Shell is a preboot command-line environment for scripting and running UEFI applications, including UEFI boot loaders. The Shell also provides CLI-based commands you can use to obtain system information, and to configure and update the system BIOS.

Prerequisites

- **Embedded UEFI Shell** is set to **Enabled**.

Procedure

1. From the **System Utilities** screen, select **Embedded Applications > Embedded UEFI Shell**.

   The **Embedded UEFI Shell** screen appears.

2. Press any key to acknowledge that you are physically present.

   This step ensures that certain features, such as disabling **Secure Boot** or managing the **Secure Boot** certificates using third-party UEFI tools, are not restricted.

3. If an administrator password is set, enter it at the prompt and press **Enter**.

   The `Shell>` prompt appears.

4. Enter the commands required to complete your task.

5. Enter the `exit` command to exit the Shell.

Intelligent Provisioning

Intelligent Provisioning is a single-server deployment tool embedded in ProLiant servers and HPE Synergy compute modules. Intelligent Provisioning simplifies server setup, providing a reliable and consistent way to deploy servers.

Intelligent Provisioning prepares the system for installing original, licensed vendor media and Hewlett Packard Enterprise-branded versions of OS software. Intelligent Provisioning also prepares the system to integrate optimized server support software from the Service Pack for ProLiant (SPP). SPP is a comprehensive systems software and firmware solution for ProLiant servers, server blades, their enclosures, and HPE Synergy compute modules. These components are preloaded with a basic set of firmware and OS components that are installed along with Intelligent Provisioning.



IMPORTANT:

HPE ProLiant XL servers do not support operating system installation with Intelligent Provisioning, but they do support the maintenance features. For more information, see "Performing Maintenance" in the Intelligent Provisioning user guide and online help.

After the server is running, you can update the firmware to install additional components. You can also update any components that have been outdated since the server was manufactured.

To access Intelligent Provisioning:

- Press **F10** from the POST screen and enter Intelligent Provisioning .

- From the iLO web interface using **Lifecycle Management**. **Lifecycle Management** allows you to access Intelligent Provisioning without rebooting your server.

HPE Insight Remote Support

Hewlett Packard Enterprise strongly recommends that you register your device for remote support to enable enhanced delivery of your Hewlett Packard Enterprise warranty, HPE support services, or Hewlett Packard Enterprise contractual support agreement. Insight Remote Support supplements your monitoring continuously to ensure maximum system availability by providing intelligent event diagnosis, and automatic, secure submission of hardware event notifications to Hewlett Packard Enterprise, which will initiate a fast and accurate resolution, based on your product's service level. Notifications can be sent to your authorized Hewlett Packard Enterprise Channel Partner for onsite service, if configured and available in your country.

For more information, see Insight Remote Support and Insight Online Setup Guide for ProLiant Servers and BladeSystem c-Class Enclosures on the **Hewlett Packard Enterprise website**. Insight Remote Support is available as part of Hewlett Packard Enterprise Warranty, HPE support services, or Hewlett Packard Enterprise contractual support agreement.

USB support

Hewlett Packard Enterprise Gen10 and Gen10 Plus servers support all USB operating speeds depending on the device that is connected to the server.

External USB functionality

Hewlett Packard Enterprise provides external USB support to enable local connection of USB devices for server administration, configuration, and diagnostic procedures.

For additional security, external USB functionality can be disabled through USB options in UEFI System Utilities.

HPE Smart Storage Administrator

HPE SSA is the main tool for configuring arrays on HPE Smart Array SR controllers. It exists in three interface formats: the HPE SSA GUI, the HPE SSA CLI, and HPE SSA Scripting. All formats provide support for configuration tasks. Some of the advanced tasks are available in only one format.

The diagnostic features in HPE SSA are also available in the standalone software HPE Smart Storage Administrator Diagnostics Utility CLI.

During the initial provisioning of the server or compute module, an array is required to be configured before the operating system can be installed. You can configure the array using SSA.

HPE SSA is accessible both offline (either through HPE Intelligent Provisioning or as a standalone bootable ISO image) and online:

- Accessing HPE SSA in the offline environment

  IMPORTANT: If you are updating an existing server in an offline environment, obtain the latest version of HPE SSA through Service Pack for ProLiant before performing configuration procedures.

  Using one of multiple methods, you can run HPE SSA before launching the host operating system. In offline mode, users can configure or maintain detected and supported devices, such as optional Smart Array controllers and integrated Smart Array controllers. Some HPE SSA features are only available in the offline environment, such as setting the boot controller and boot volume.

- Accessing HPE SSA in the online environment
  This method requires an administrator to download the HPE SSA executables and install them. You can run HPE SSA online after launching the host operating system.

For more information, see HPE SSA online help.

Identifying components and LEDs

Front panel components

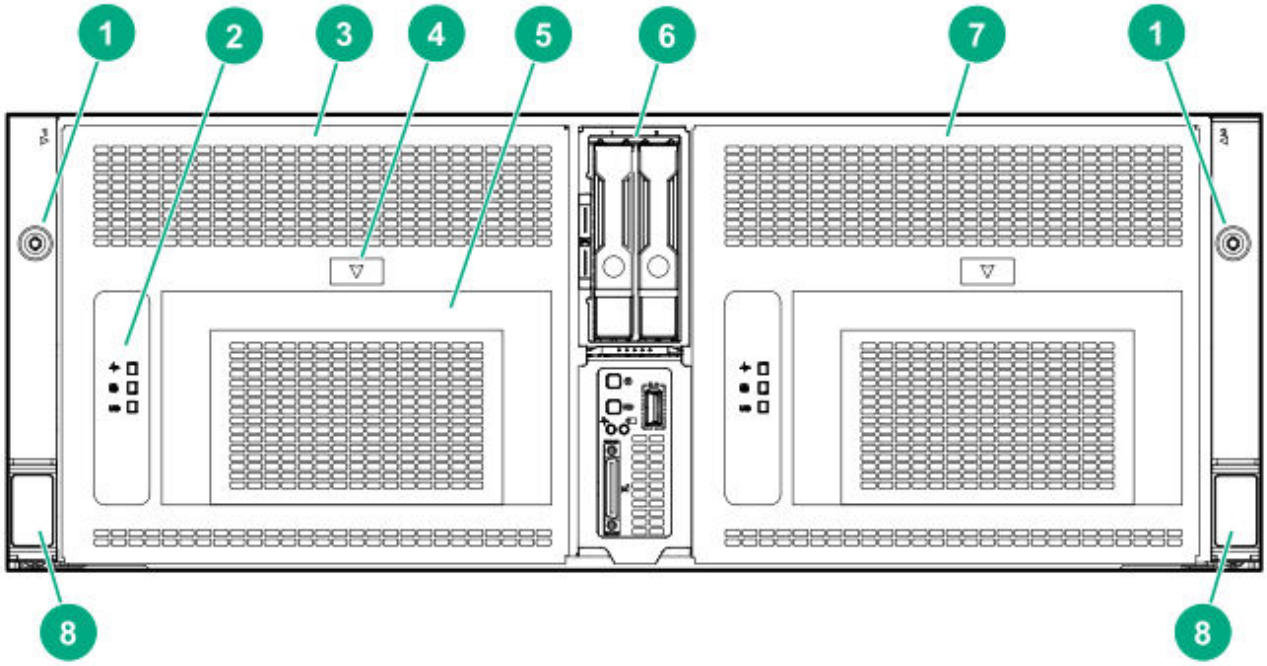

Item	Specification
1	Bezel ear screws (2)
2	Drive drawer LEDs
3	Drive drawer 1
4	Drive drawer release button
5	Drive drawer release levers
6	Server bay
7	Drive drawer 2
8	Quick-release levers

Drive Drawer LEDs

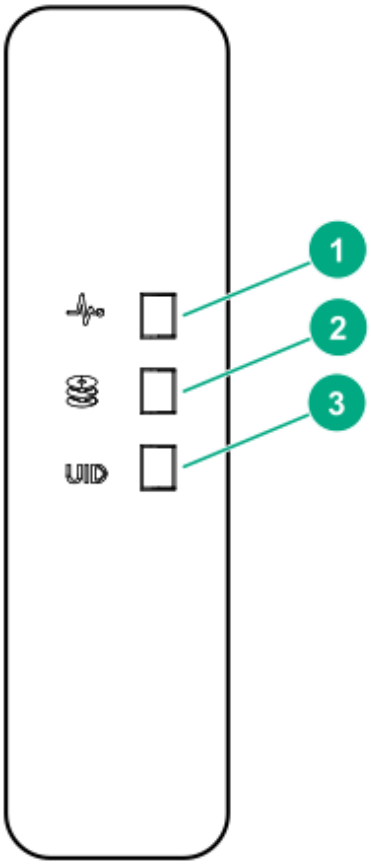

Item	Specification
1	Backplane health LED
2	Drive health LED
3	UID LED

Server front panel components

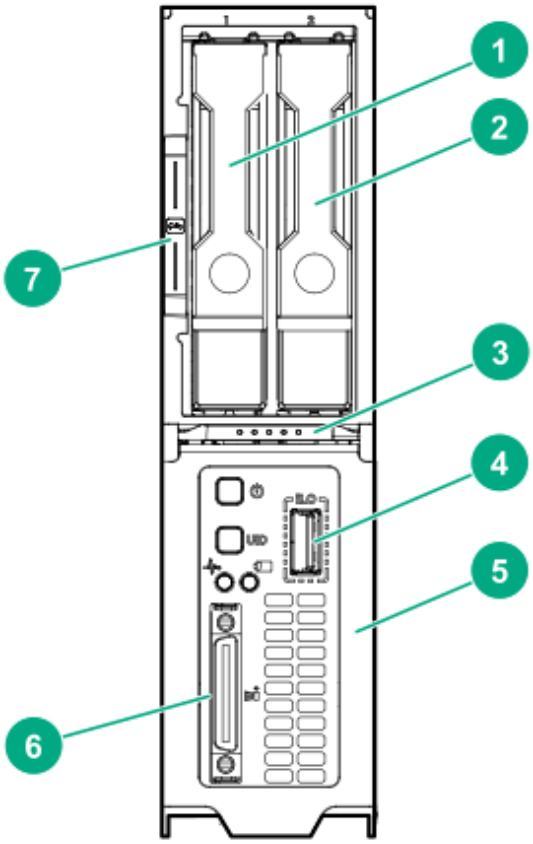

Item	Description
1	Drive bay 1
2	Drive bay 2
3	Server ejector button
4	iLO Service port
5	Server release lever
6	SUV cable connector
7	Serial label pull tab

Server front panel LEDs and buttons

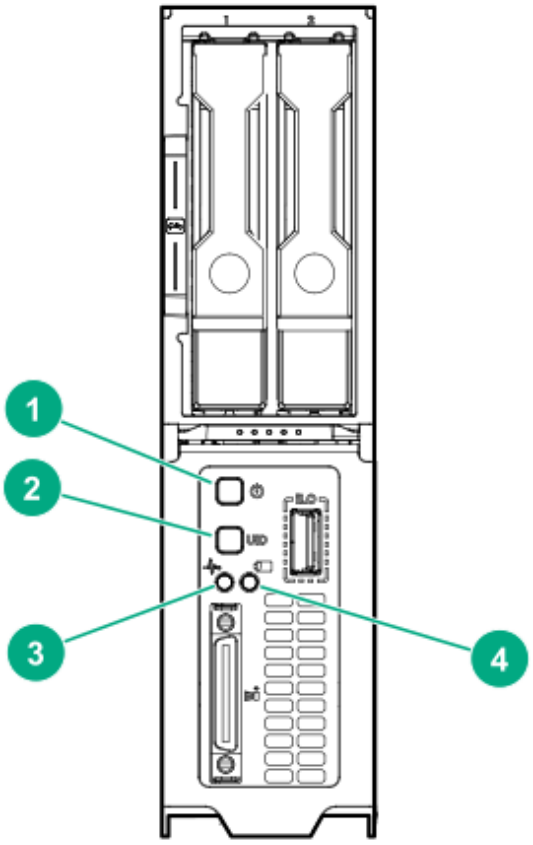

Item	Description	Status
1	Power On/Standby button and system power LED	Solid green = System on Flashing green (1 Hz/cycle per sec) = Performing power on sequence Solid amber = System in standby Off = No power present
2	UID LED/button	Solid blue = Activated Flashing blue: • 1 Hz/cycle per sec = Remote management or firmware upgrade in progress • 4 Hz/cycle per sec = iLO manual reboot sequence initiated • 8 Hz/cycle per sec = iLO manual reboot sequence in progress • 1 fast flash and then off for 3 seconds = iLO Service Port status is Complete • 4 medium flashes and then off for 1 second = iLO Service Port status is Busy

Item	Description	Status
		• 8 fast flashes and then off for 1 second = iLO Service Port status i s Error Off = Deactivated
3	Server health LED	Solid green = Normal Flashing green (1 Hz/cycle per sec) = iLO is rebooting Flashing amber = System degraded Flashing red (1 Hz/cycle per sec) = System critical
4	Server backup LED	Off = Normal operations. No backup in progress. Flashing white = Backup in progress. Do not remove drives, nodes, or associated system components, and do not power down the server.

Rear panel components

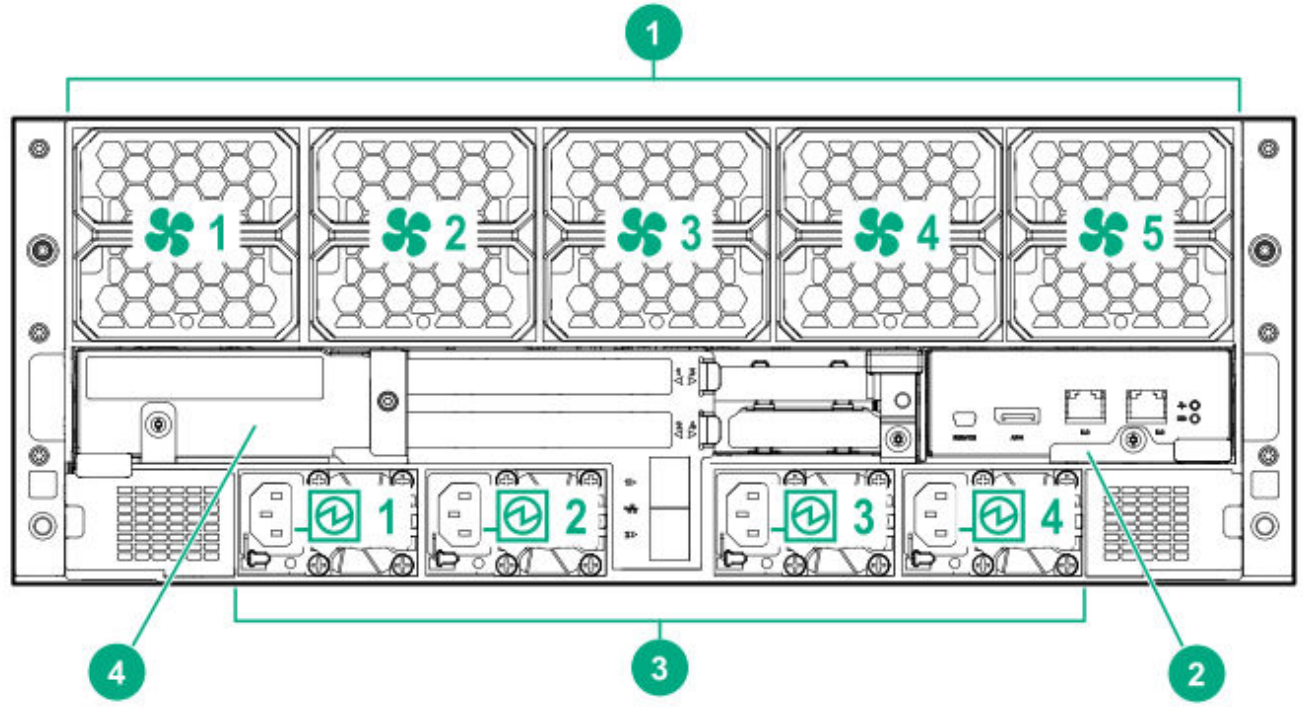

Item	Description
1	System fan modules (two fans per module)
2	Management module
3	Power supply bays
4	I/O module

Table 1: Fan component numbering

Fan module	Front fan number	Rear fan number
1	1	6
2	2	7
3	3	8
4	4	9
5	5	10

Power supply LEDs

The power supply LED is on each power supply.

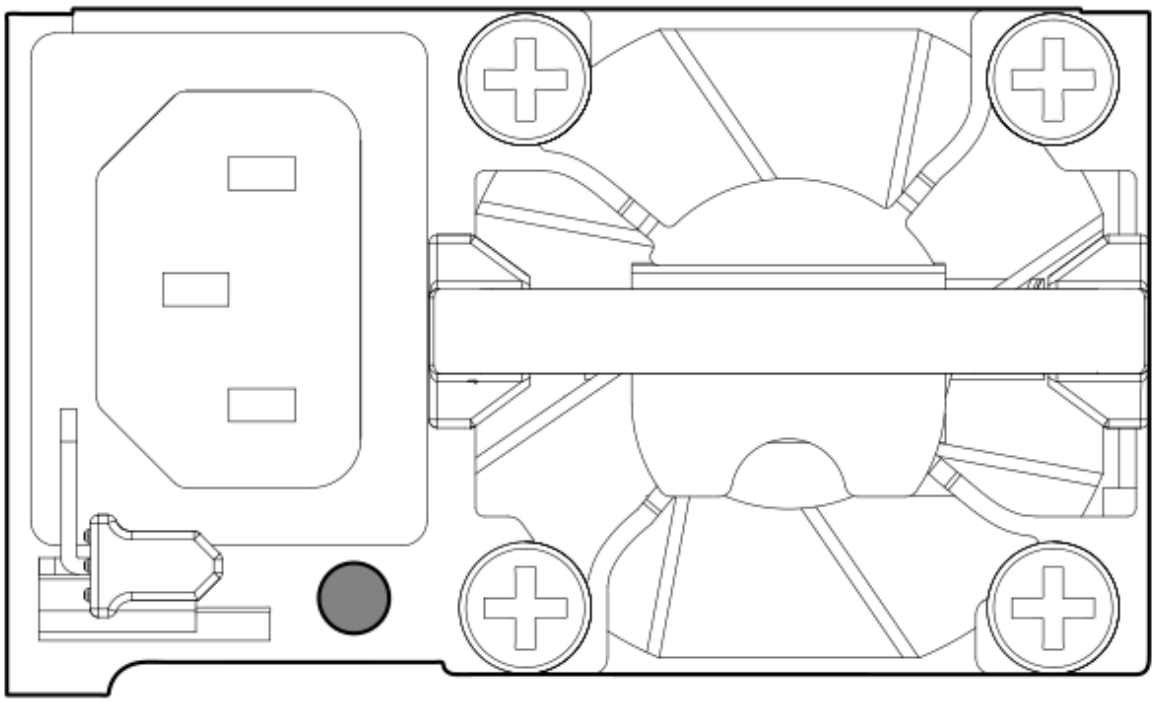

LED Status	Description
Off	System is off or power supply has failed.
Solid Green	Normal

Management module components

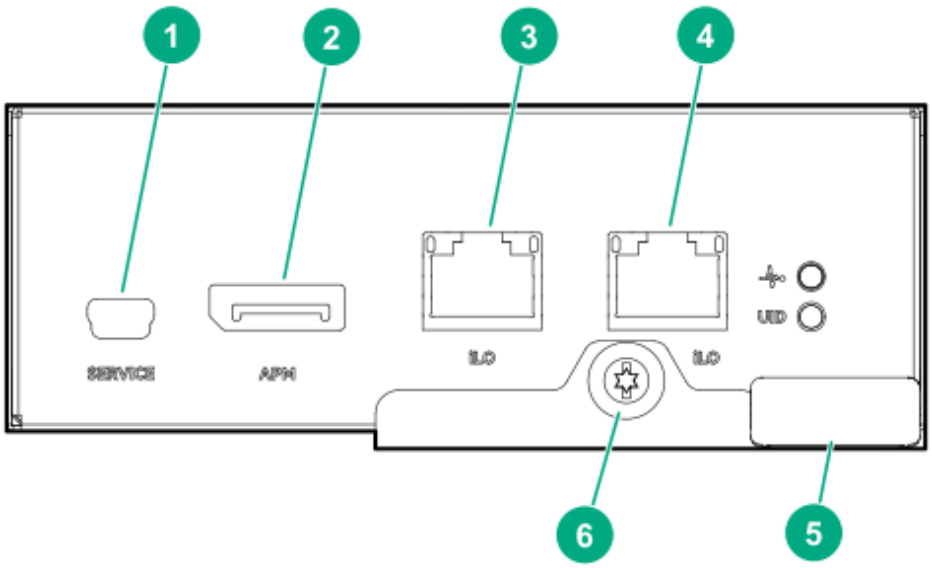

Item	Description
1	Reserved
2	APM connector
3	iLO port 1 (RJ-45)
4	iLO port 2 (RJ-45)
5	Management module release lever
6	Management module thumbscrew

Management module LEDs

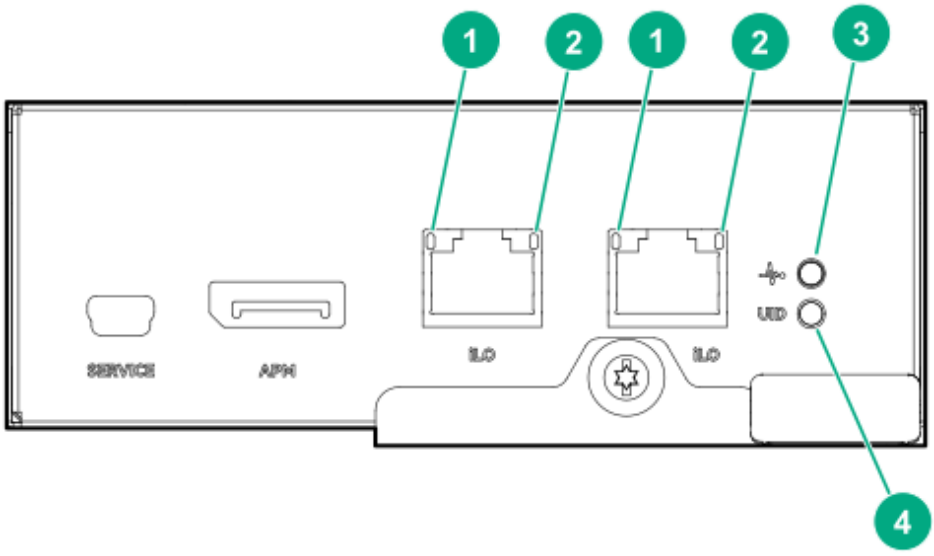

Item	Description
1	iLO (RJ-45) port link LEDs
2	iLO (RJ-45) port activity LEDs
3	Chassis health LED
4	Chassis UID LED

I/O module components

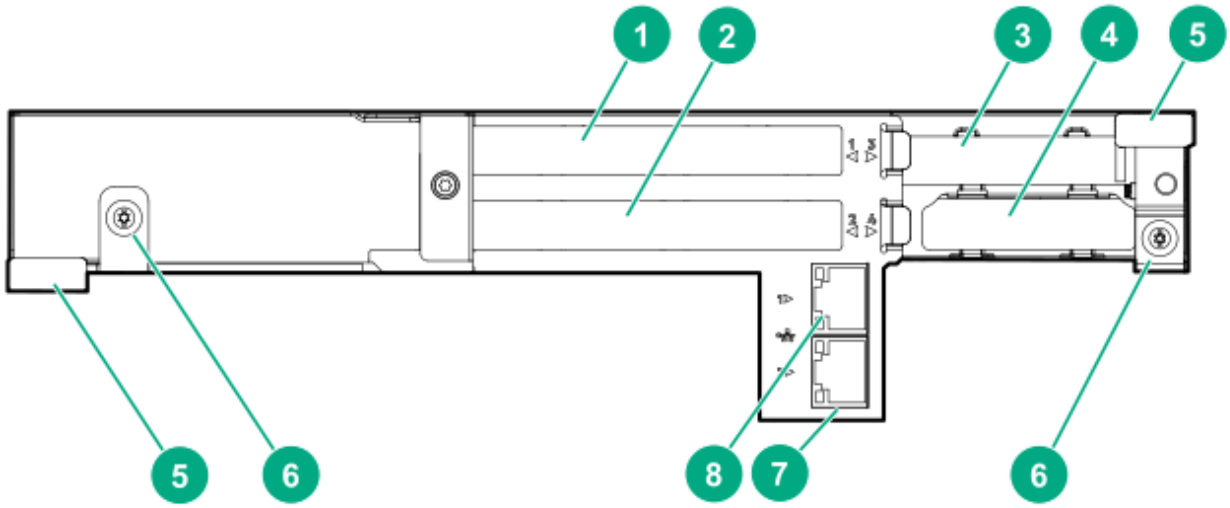

Item	Description
1	PCIe slot 1
2	PCIe slot 2
3	PCIe slot 3
4	FlexLOM slot
5	I/O module release levers (2)
6	I/O module thumbscrews (2)
7	NIC port 2 for 332i 1 Gb network adapter
8	NIC port 1 for 332i 1 Gb network adapter

More information

PCIe slot and processor mapping
PCIe slot definitions

I/O module LEDs

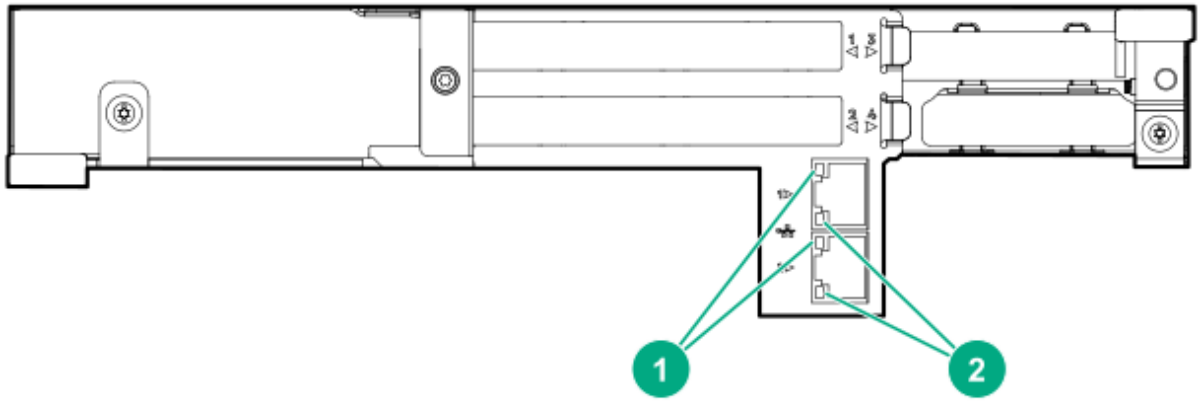

Item	Description
1	NIC activity LED
2	NIC link LED

PCIe slot definitions

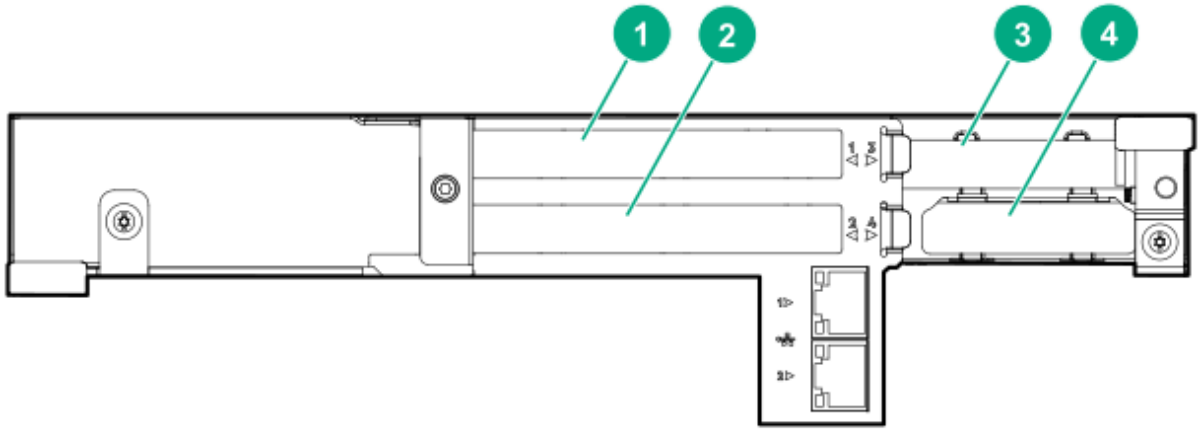

Item	2x/2x I/O module	3x/1x I/O module
1	PCIe expansion slot 1 — PCIe3 x16 (16, 8, 4, 2, 1)	PCIe expansion slot 1 — PCIe3 x8 (8, 4, 2, 1)
2	PCIe expansion slot 2 — PCIe3 x16 (16, 8, 4, 2, 1)	PCIe expansion slot 2 — PCIe3 x8 (8, 4, 2, 1)
3	PCIe expansion slot 3 — PCIe3 x16 (16, 8, 4, 2, 1)	PCIe expansion slot 3 — PCIe3 x16 (16, 8, 4, 2, 1)
4	FlexibleLOM slot — PCIe3 x8 (8, 4, 2, 1)	FlexibleLOM slot — PCIe3 x8 (8, 4, 2, 1)

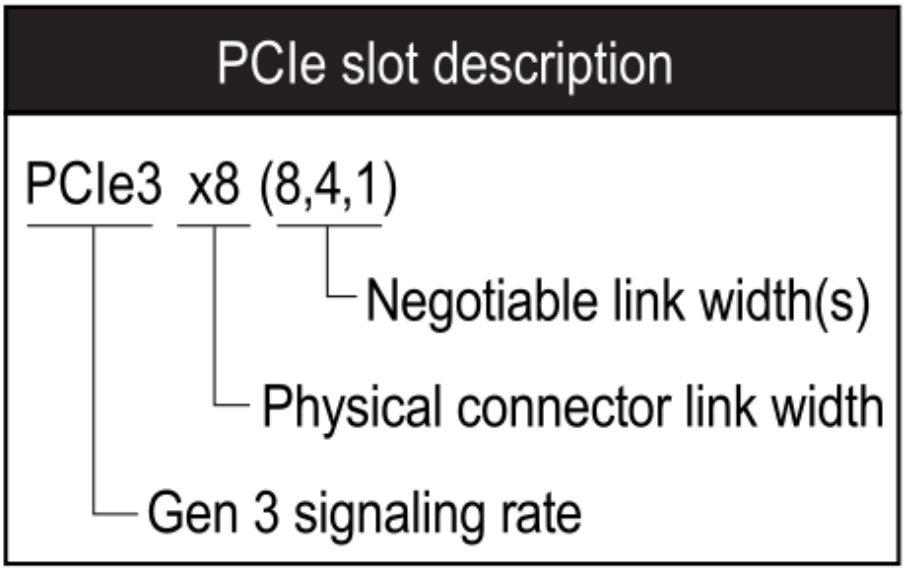

More information

PCIe slot and processor mapping
I/O module components

PCIe slot and processor mapping

PCIe slot	2x/2x I/O module	3x/1x I/O module
1	Processor 2	Processor 1
2	Processor 1	Processor 1
3	Processor 2	Processor 2
4	Processor 1	Processor 1

I/O SAS board port identification

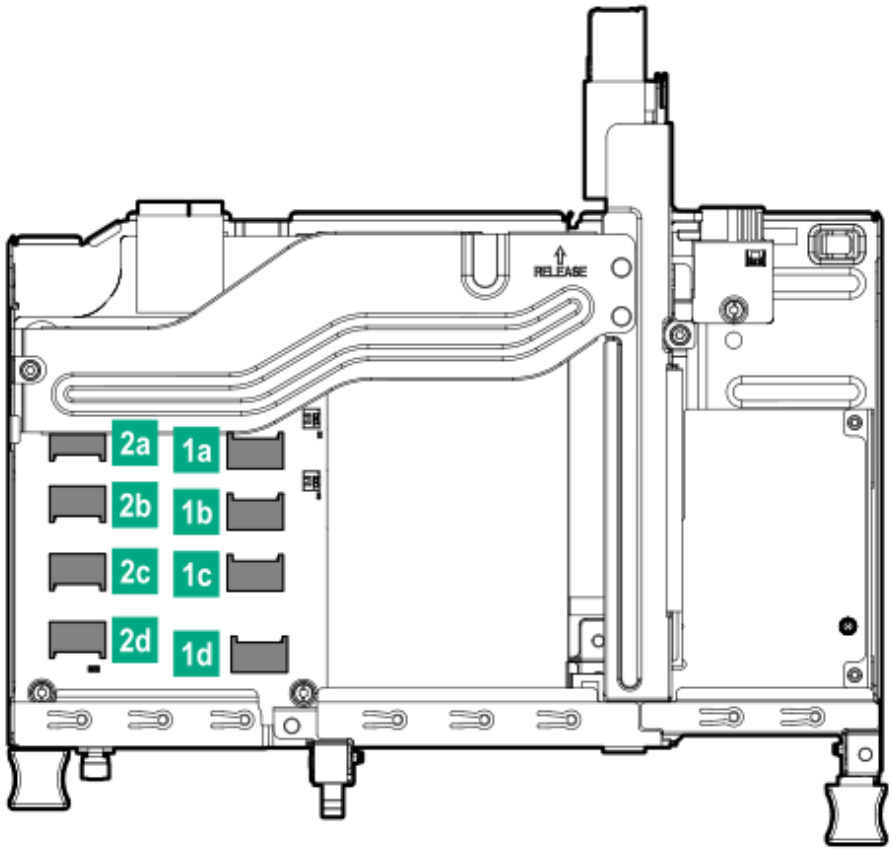

HPE Smart Array E208i-p SR Gen10 Controller port identification

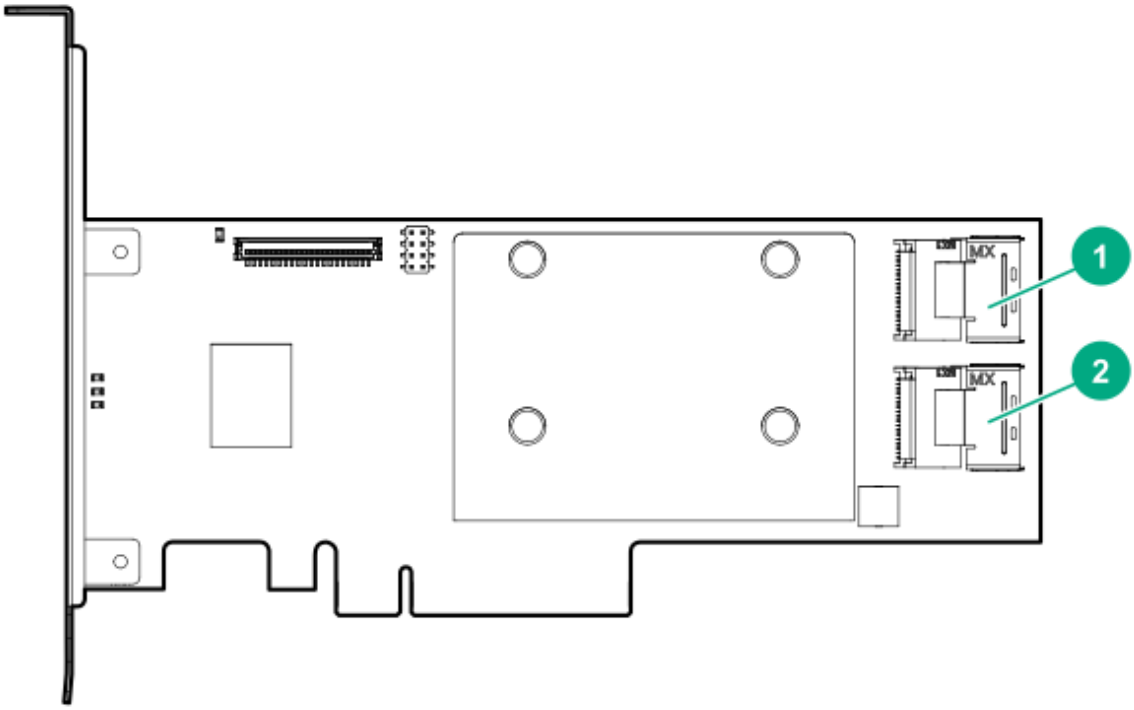

Item	Description
1	Internal x4 Mini SAS port 1
2	Internal x4 Mini SAS port 2

HPE Smart Array P408i-p SR Gen10 Controller port identification

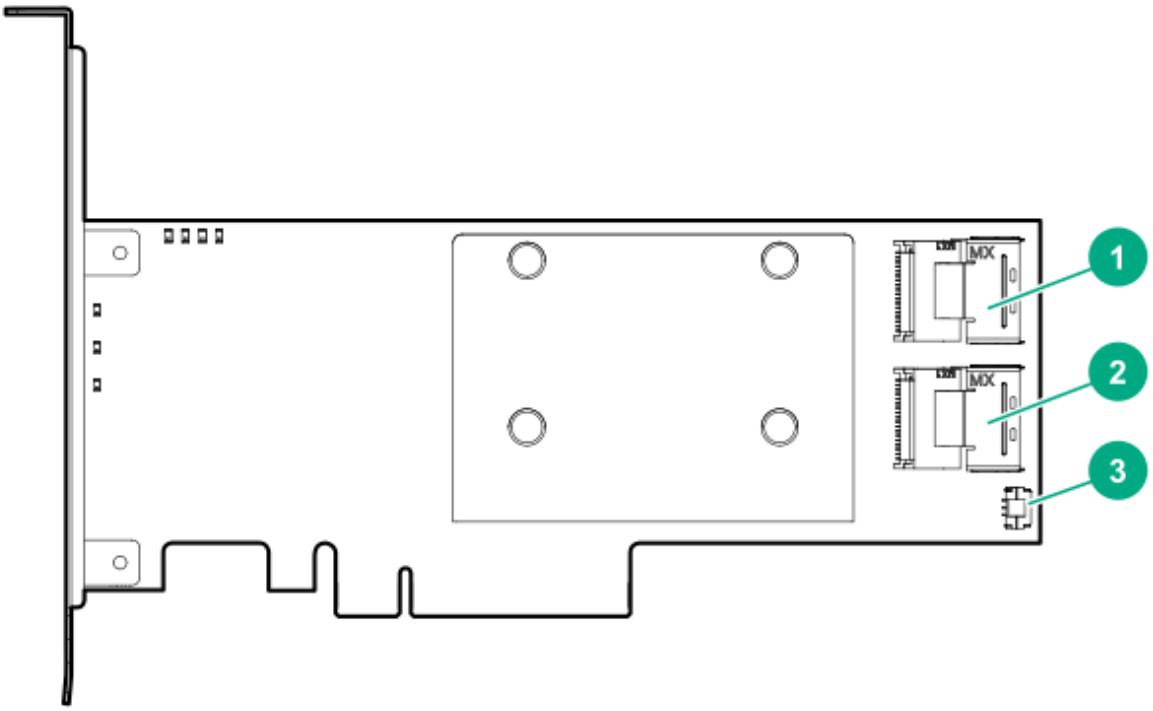

Item	Description
1	Internal x4 Mini SAS port 1
2	Internal x4 Mini SAS port 2
3	Energy pack connector

HPE Smart Array P824i-p MR Gen10 Controller port identification

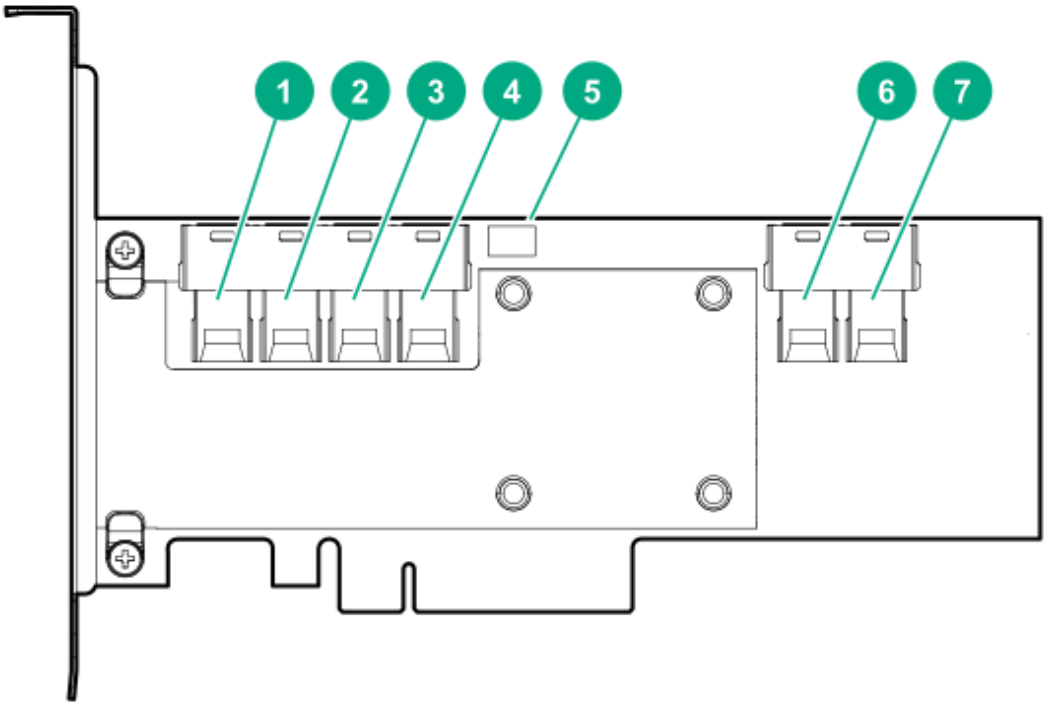

Item	Description
1	Internal SAS port 1i
2	Internal SAS port 2i
3	Internal SAS port 3i
4	Internal SAS port 4i
5	Energy pack connector
6	Internal SAS port 5i
7	Internal SAS port 6i

Controller backup power connectors

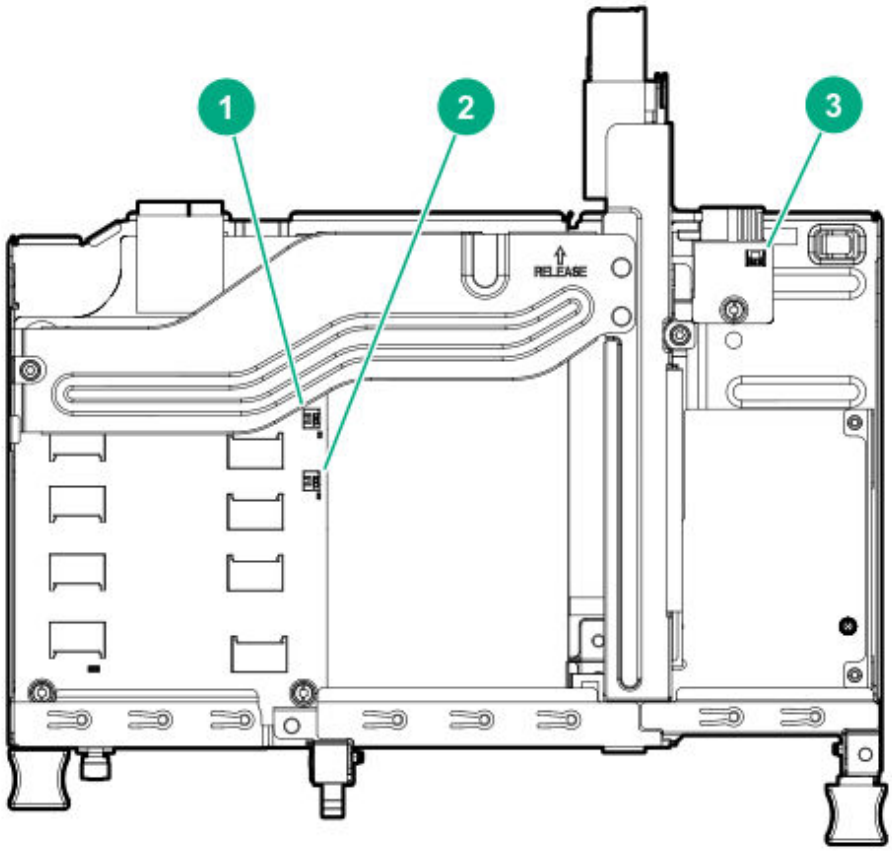

Item	Description
1	PCIe slot 1 controller backup power connector
2	PCIe slot 2 controller backup power connector
3	PCIe slot 3 controller backup power connector

HPE NS204i-p NVMe OS Boot Device components

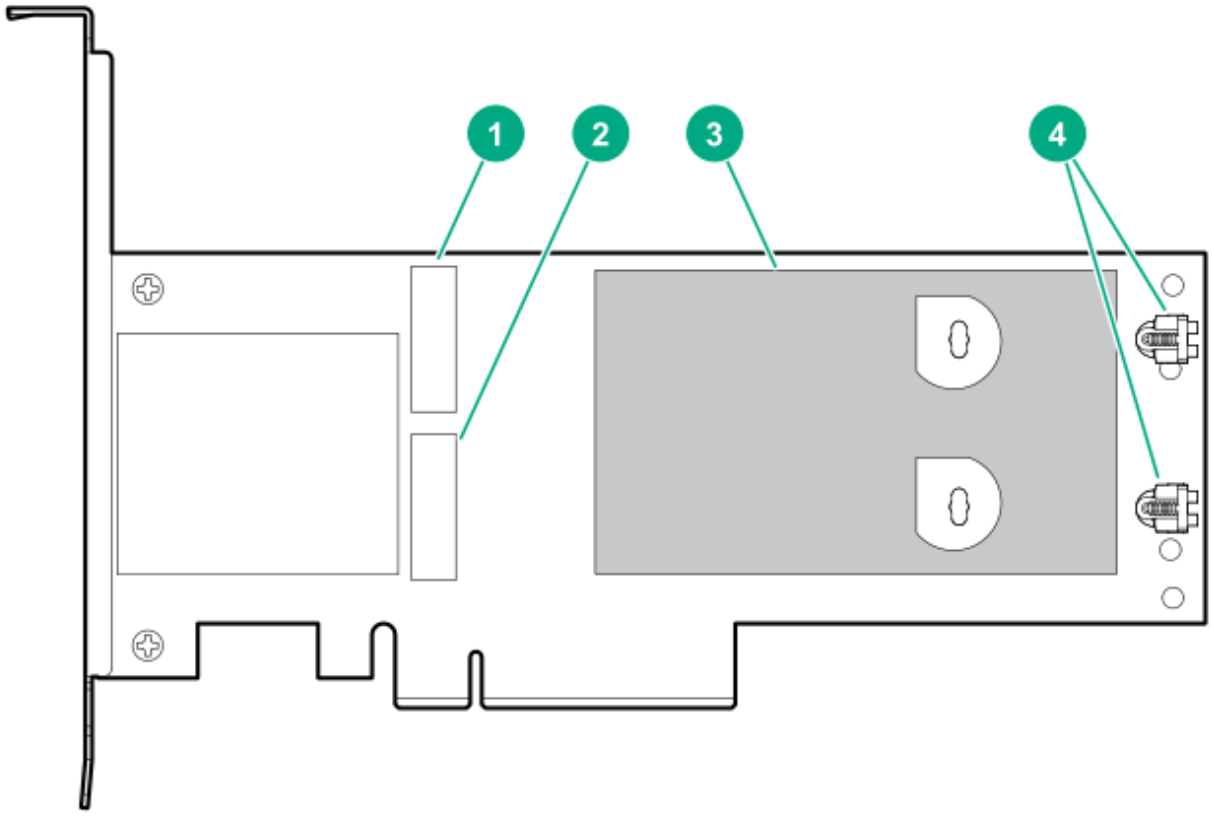

Item	Description
1	Drive bay 1
2	Drive bay 2
3	Thermal interface pad with removable liner
4	M.2 drive retaining latches

HPE NS204i-p NVMe OS Boot Device LED definitions

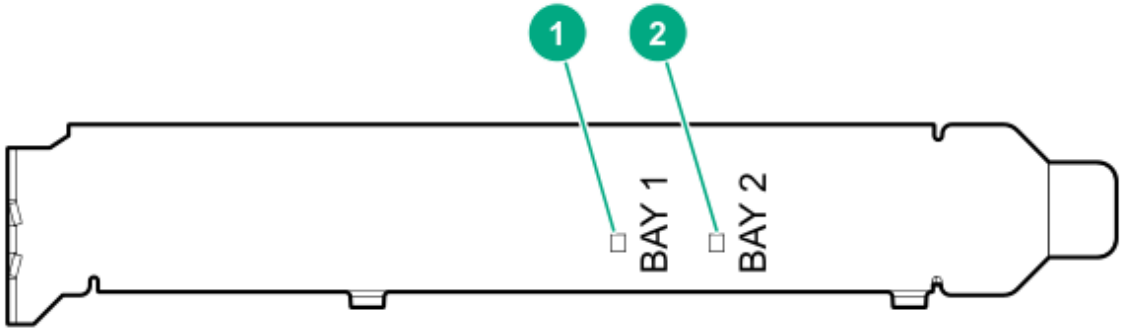

Item	Description	Fault LED status
1	Bay 1 LED	Off: Normal
2	Bay 2 LED	Flashing 1Hz: Drive predictive failure Amber: Drive failure

LFF drive bay numbering

The arrow indicates the front of the chassis.

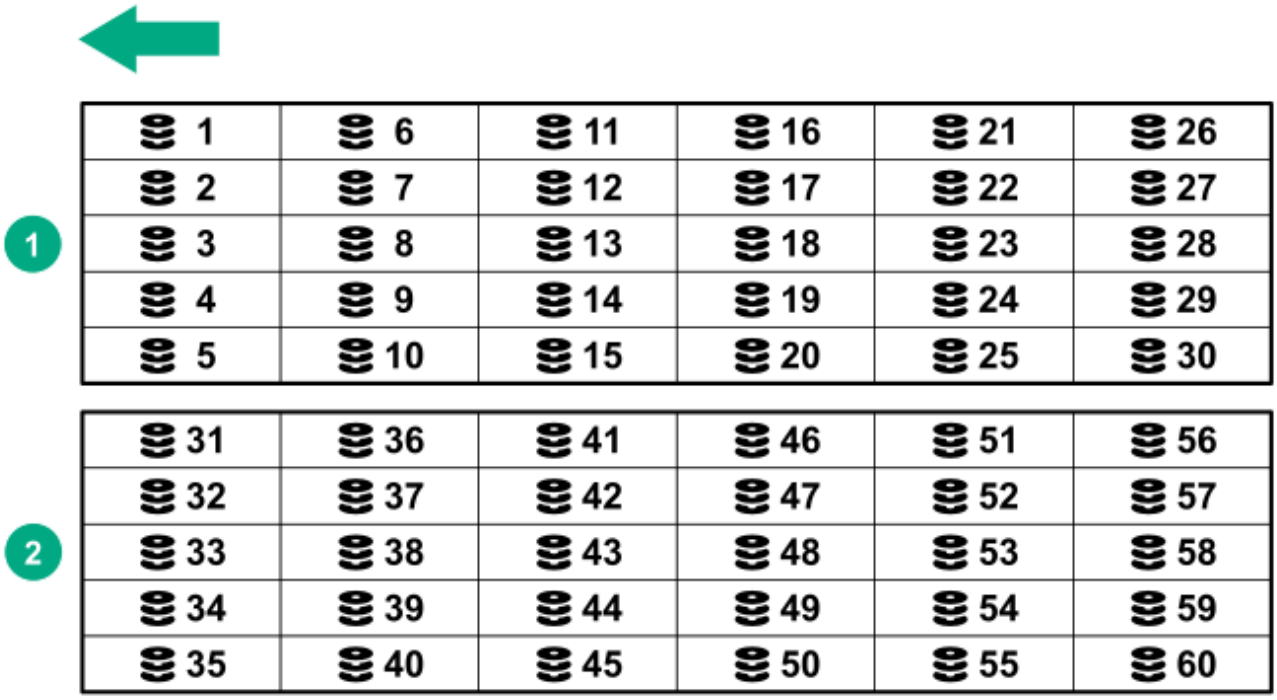

Item	Description
1	Drive drawer 1
2	Drive drawer 2

Low-profile LFF drive LED definitions

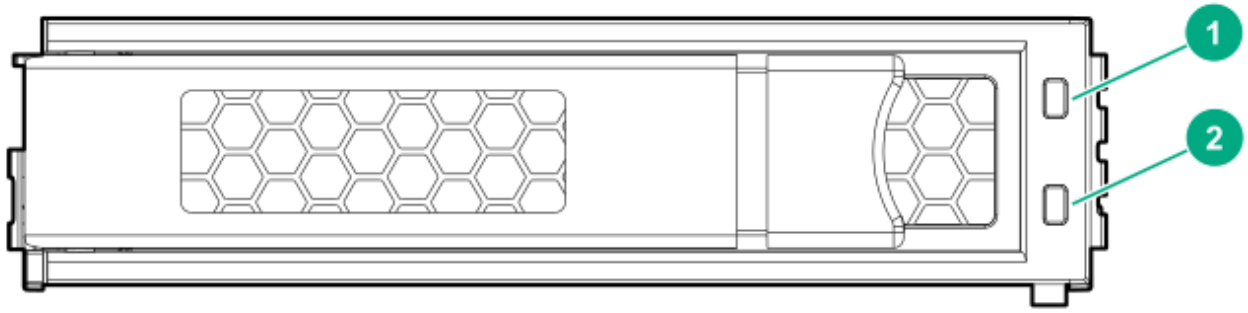

Item	LED	Status	Definition
1	Fault\Locate	Solid amber	The drive has failed.
		Solid blue	The drive is operating normally and being identified by a management application.
		Flashing amber/blue (1 flash per second)	The drive has failed, or a predictive failure alert has been received for this drive; it also has been identified by a management application.
		Flashing amber (1 flash per second)	A predictive failure alert has been received for this drive. Replace the drive as soon as possible.
2	Online\Activity	Solid green	The drive is online and has no activity.
		Flashing green (4 flashes per second)	The drive is operating normally and has activity.
		Flashing green (1 flash per second)	The drive is doing one of the following: • Rebuilding • Performing a RAID migration • Performing a strip size migration • Performing a capacity expansion • Performing a logical drive extension • Erasing

Item	LED	Status	Definition
			• Spare part activation
		Off	The drive is not configured by a RAID controller or a spare drive.

DSC-25 2-port SFP28 card ports and LEDs

Ports

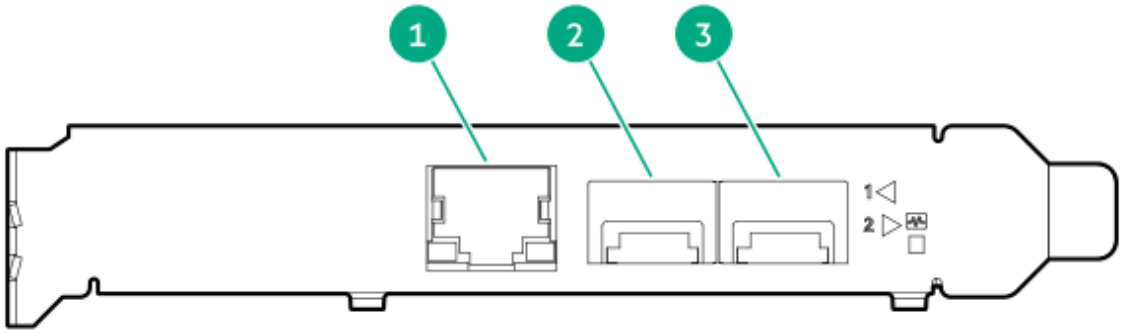

Table 2: Ports

Item	Port	Description
1	Management port	1GbE RJ45
2	Network interface port	10/25G SFP+ based
3	Network interface port	10/25G SFP+ based

LEDs

The HPE for Pensando DSP DSC-25 2p SFP28 card is a dual-port, single-slot, half-height, half-length (HHHL) SFP28 network adapter. It has LEDs for Link (L) and Activity (A) for each port. A half-height bracket is shown in the following illustration with SFP28 ports and LEDs.

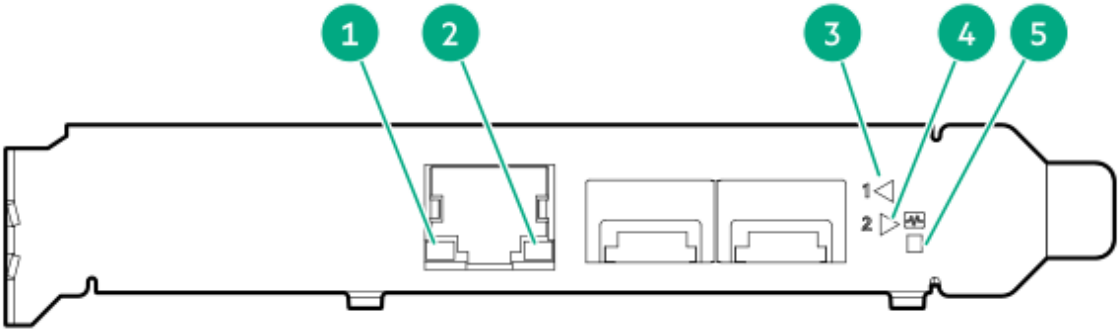

Table 3: LED indicators

Item	LED	Status	Description
1	Management Port Activity LED	Off	No activity
		Flashing	Passing traffic; flashing frequency indicates traffic intensity
2	Management Port Link LED	Off	A link has not been established
		Solid green	Valid Ethernet link
3	SFP Port 1 Link/ Activity LED	Off	A link has not been established
		Solid green	Valid Ethernet link
		Flashing green	Passing traffic; flashing frequency indicates traffic intensity
		Solid amber	Link fault
4	SFP Port 2 Link/ Activity LED	Off	A link has not been established
		Solid green	Valid Ethernet link
		Flashing green	Passing traffic; flashing frequency indicates traffic intensity

Item	LED	Status	Description
		Solid amber	Link fault
5	System status LED	Off	System is not powered
		Solid amber	Power is up, software has not booted yet
		Solid green	System is up and fully operational

Cabling

Connecting the Management module to the network with the iLO ports

Procedure

If using the Management module iLO ports to connect the chassis to the network, connect all cables to the Management module and the network.

The arrow indicates the connection to the network.

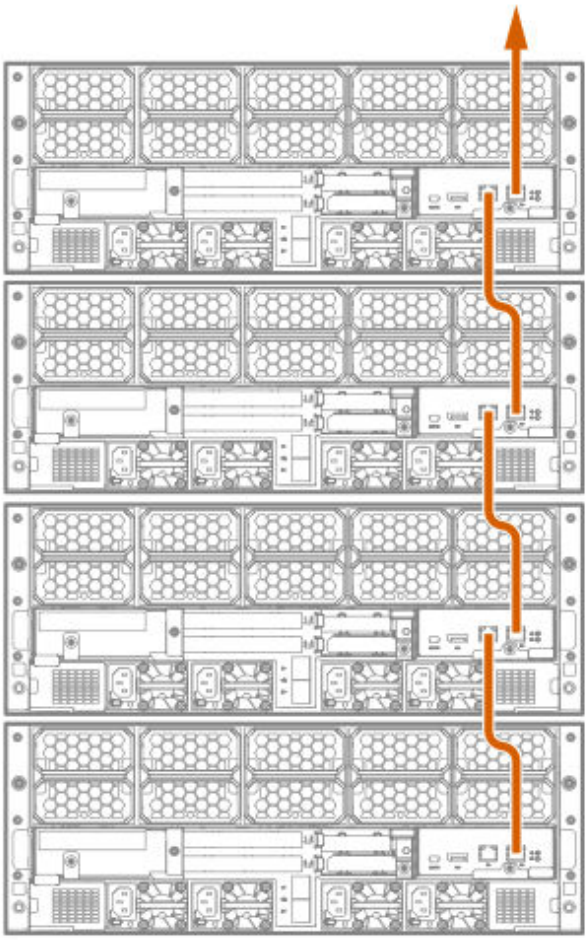

Connecting the optional HPE APM module

Procedure

1. Connect the APM to the network (orange).
2. Connect the APM to the APM ports (blue).

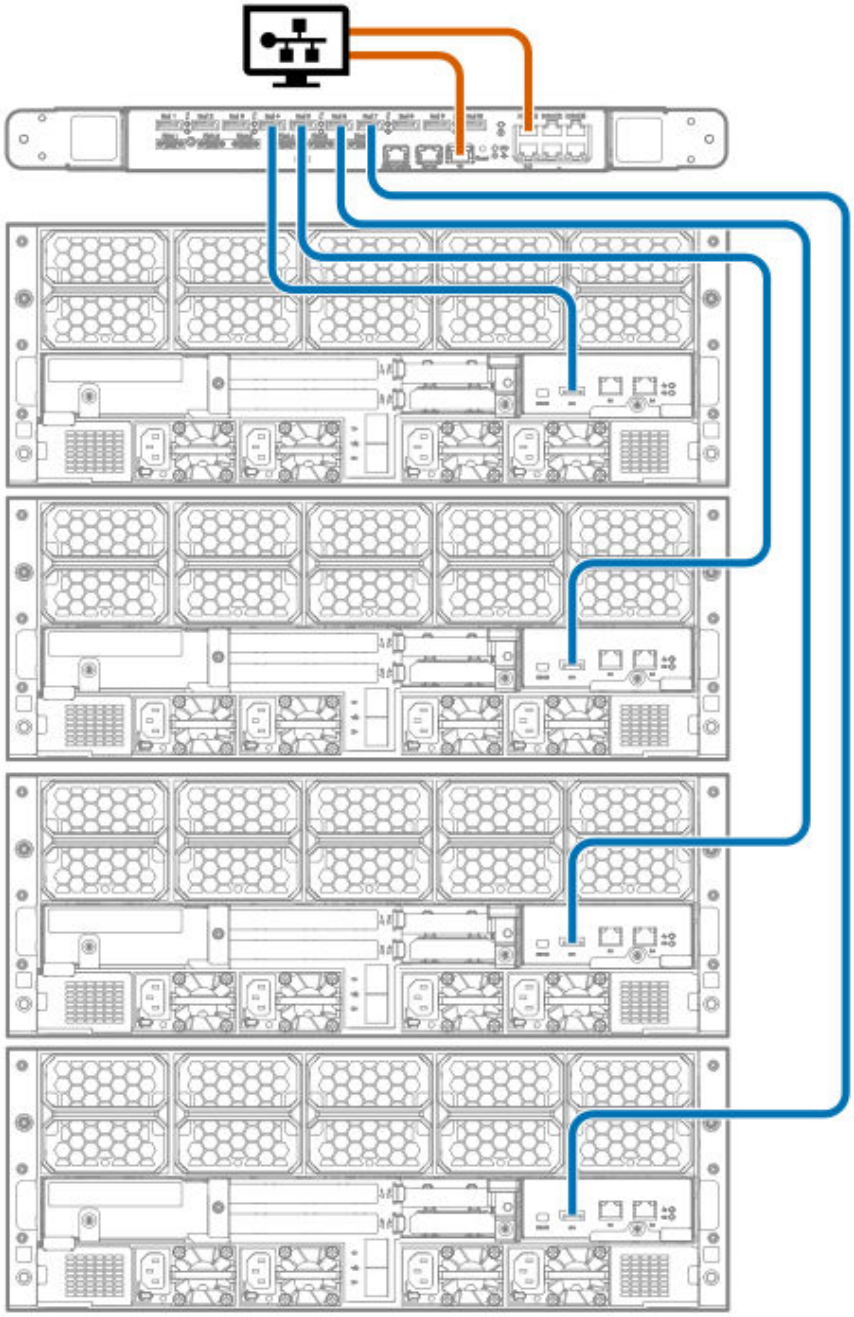

I/O module option cabling

HPE Smart Array E208i-p SR Gen10 Controller cabling

The HPE Apollo 4510 Gen10 Chassis supports single and dual installation for the HPE Smart Array E208i-p SR Gen10 Controller.
Hewlett Packard Enterprise recommends installing a single controller board in slot 2. Installing a controller board in slot 1 requires that the second processor is installed in the server.

- Single-board option

Figure 1: Mini SAS cabling with a single E208i-p board

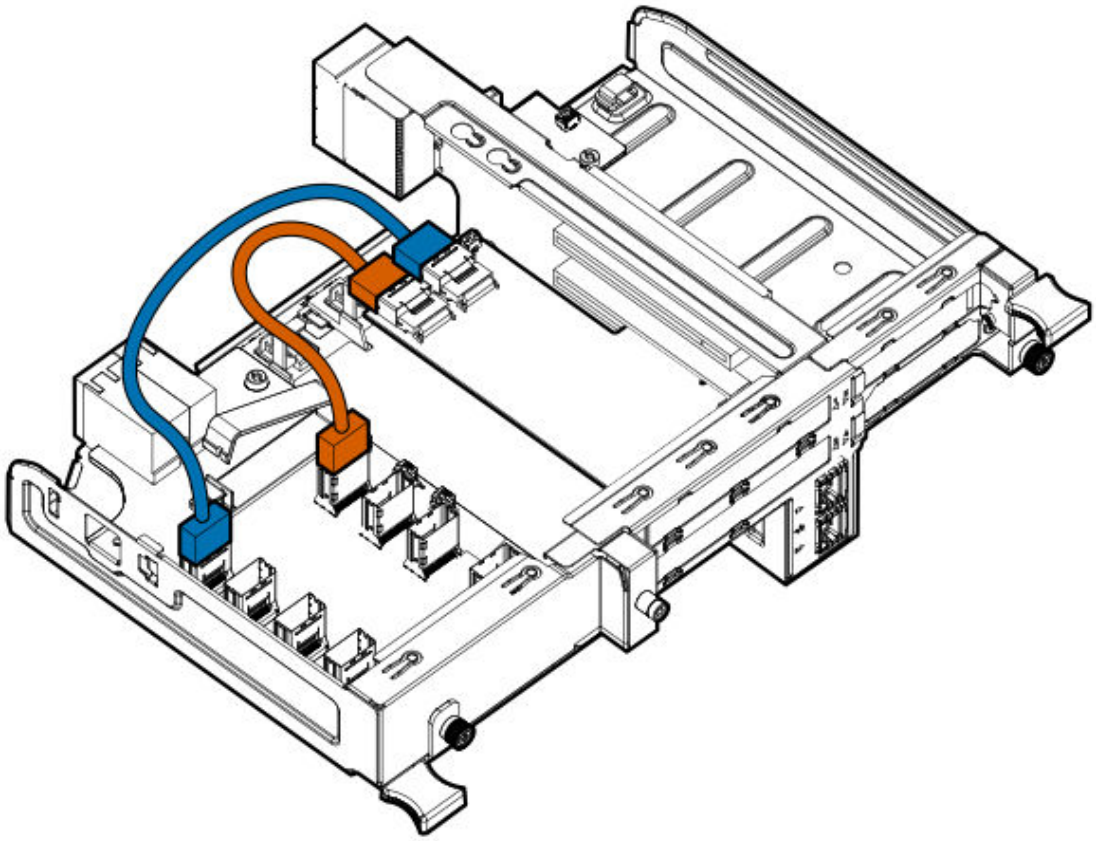

- Dual-board option

Figure 2: Mini SAS cabling with dual E208i-p boards

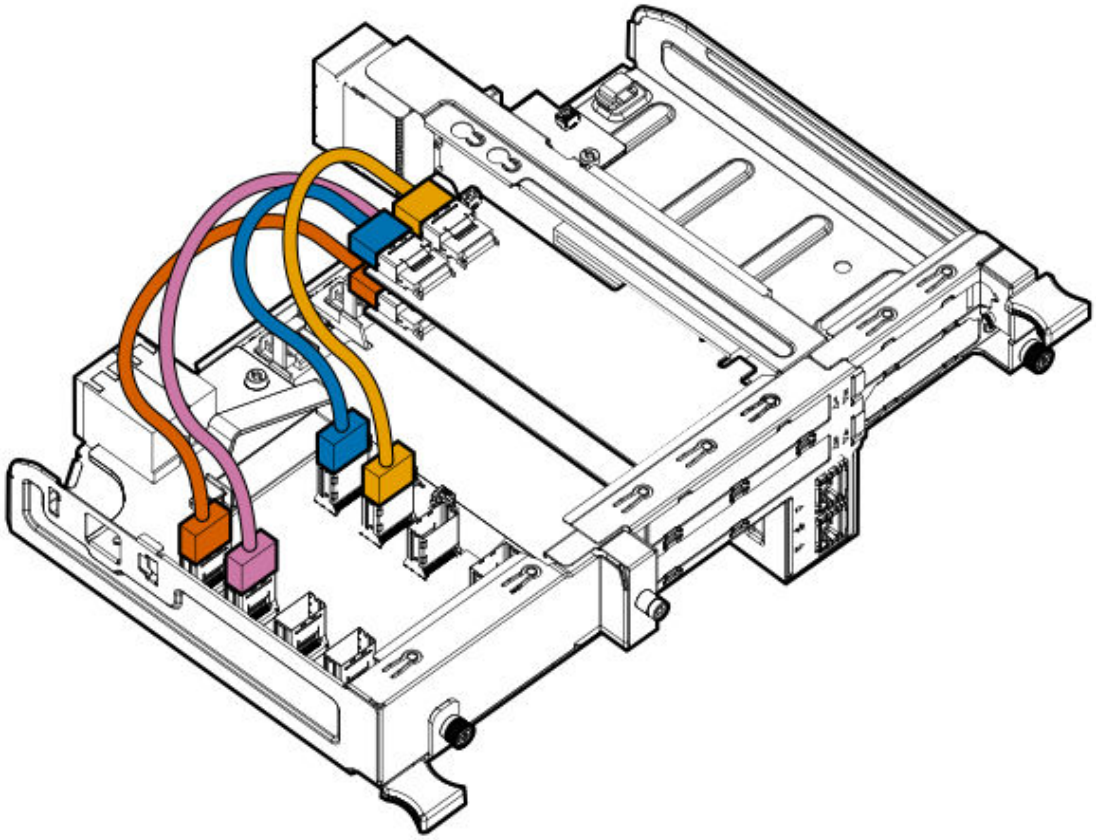

HPE Smart Array P408i-p SR Gen10 Controller cabling

The HPE Apollo 4510 Gen10 Chassis supports single and dual installation for the HPE Smart Array P408i-p SR Gen10 Controller.
Hewlett Packard Enterprise recommends installing a single controller board in slot 2. Installing a controller board in slot 1 requires that the second processor is installed in the server.

- Single-board option

Figure 3: Mini SAS cabling with a single P408i-p board

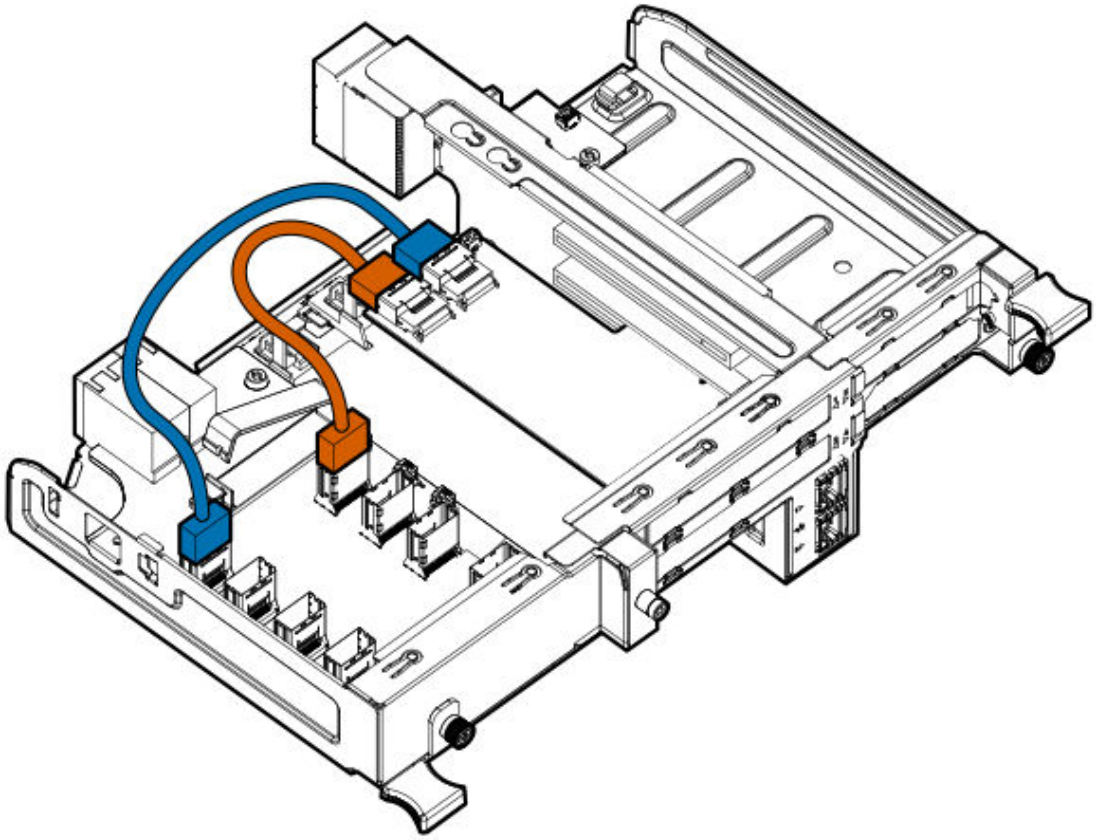

Figure 4: Smart Storage cache backup power cabling with a single P408i-p board

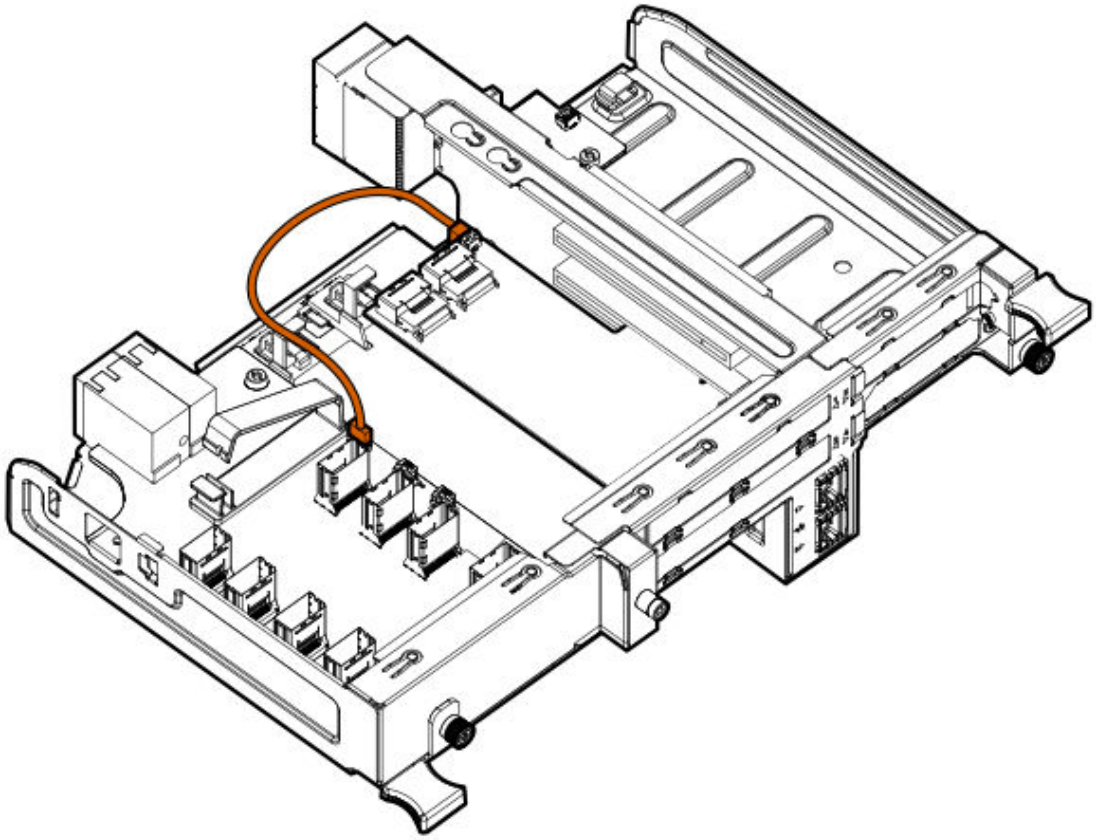

- Dual-board option

Figure 5: Mini SAS cabling with dual P408i-p boards

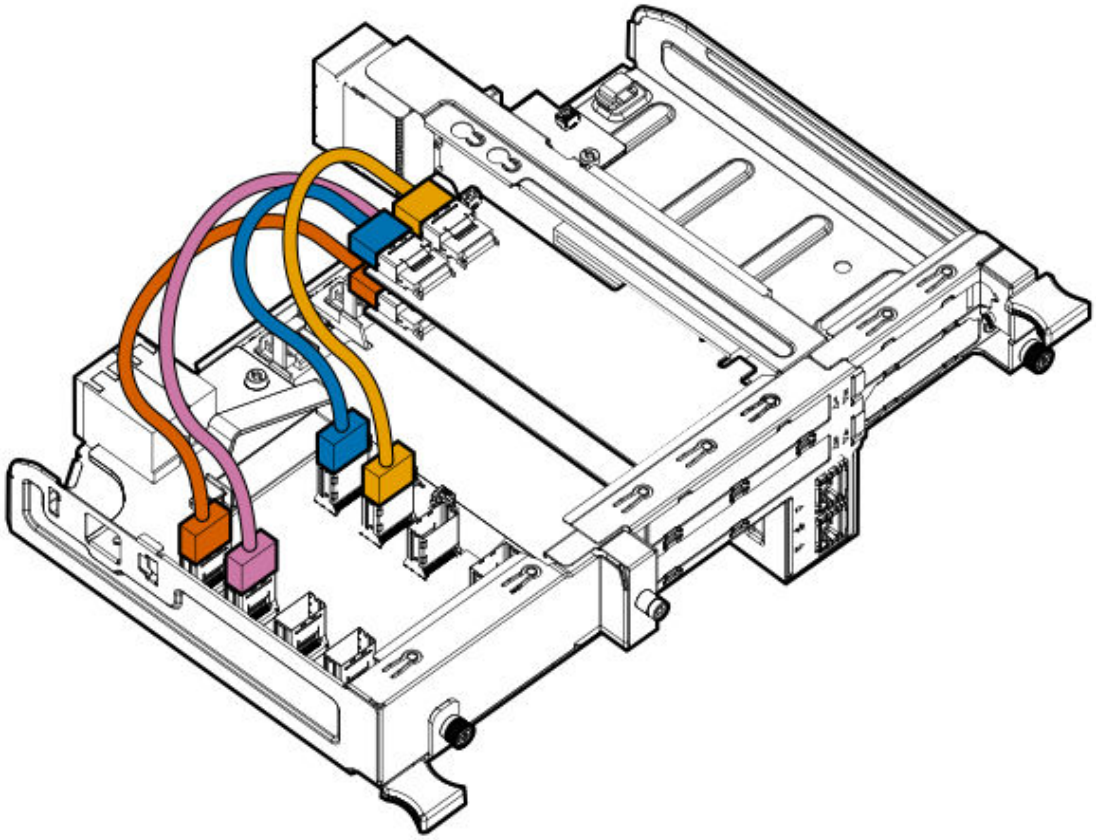

Figure 6: Smart Storage cache backup power cabling with dual P408i-p boards

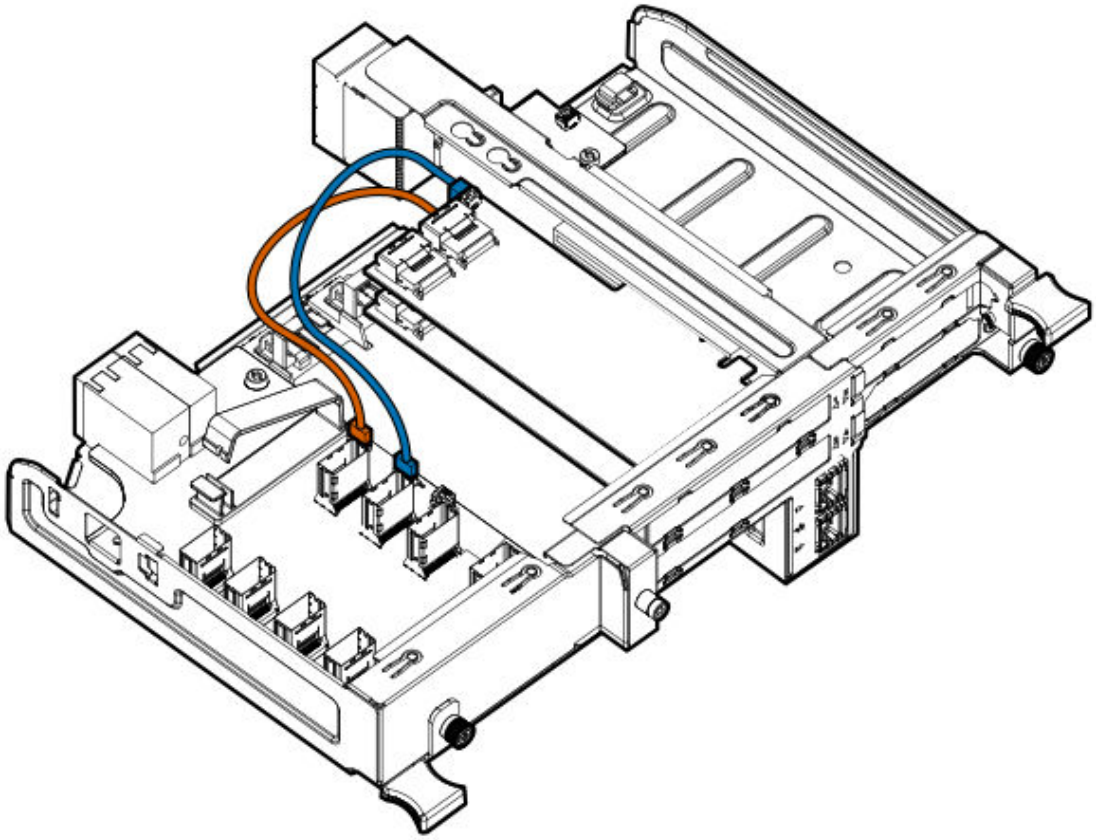

More information

Controller backup power connectors

HPE Smart Array P824i-p MR Gen10 Controller cabling

The HPE Apollo 4510 Gen10 Chassis supports single and dual installation for the HPE Smart Array P824i Gen10 Controller.
Hewlett Packard Enterprise recommends installing a single controller board in slot 2. Installing a controller board in slot 1 requires that the second processor is installed in the server.

- Single-board option

Figure 7: SAS cabling with a single P824i-p controller

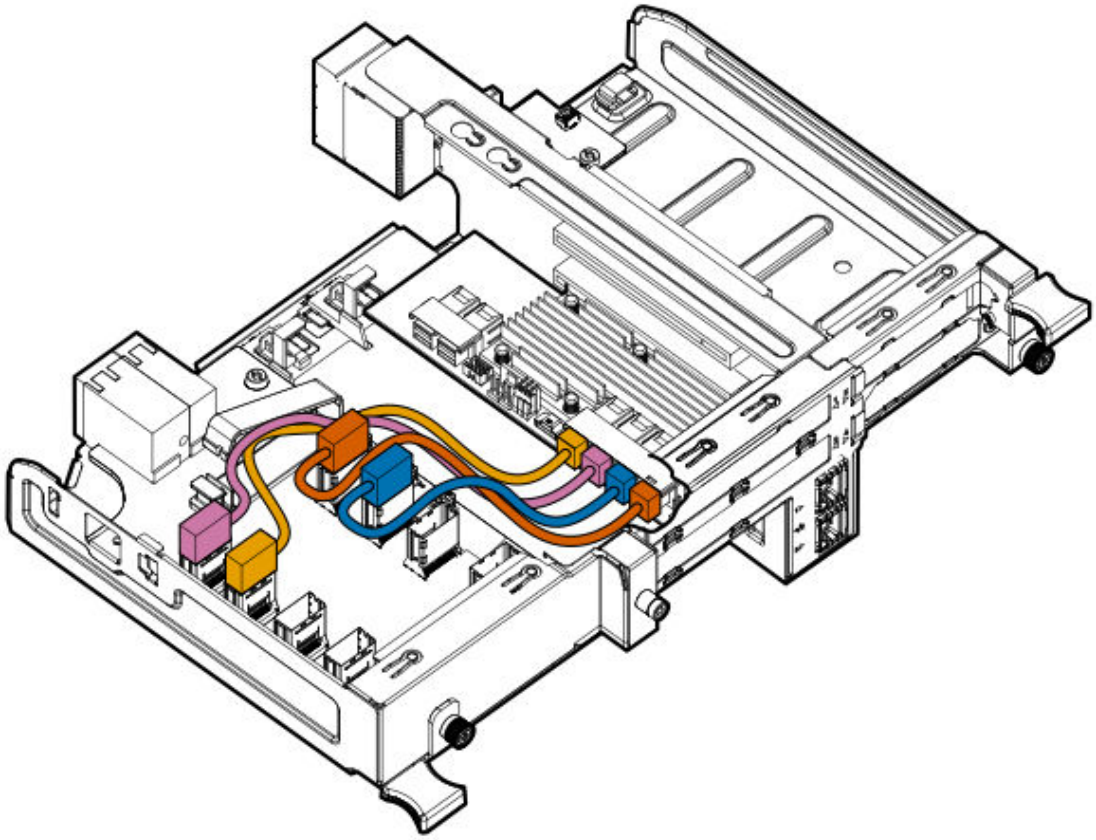

Figure 8: Smart Storage cache backup power cabling with a single P824i-p controller

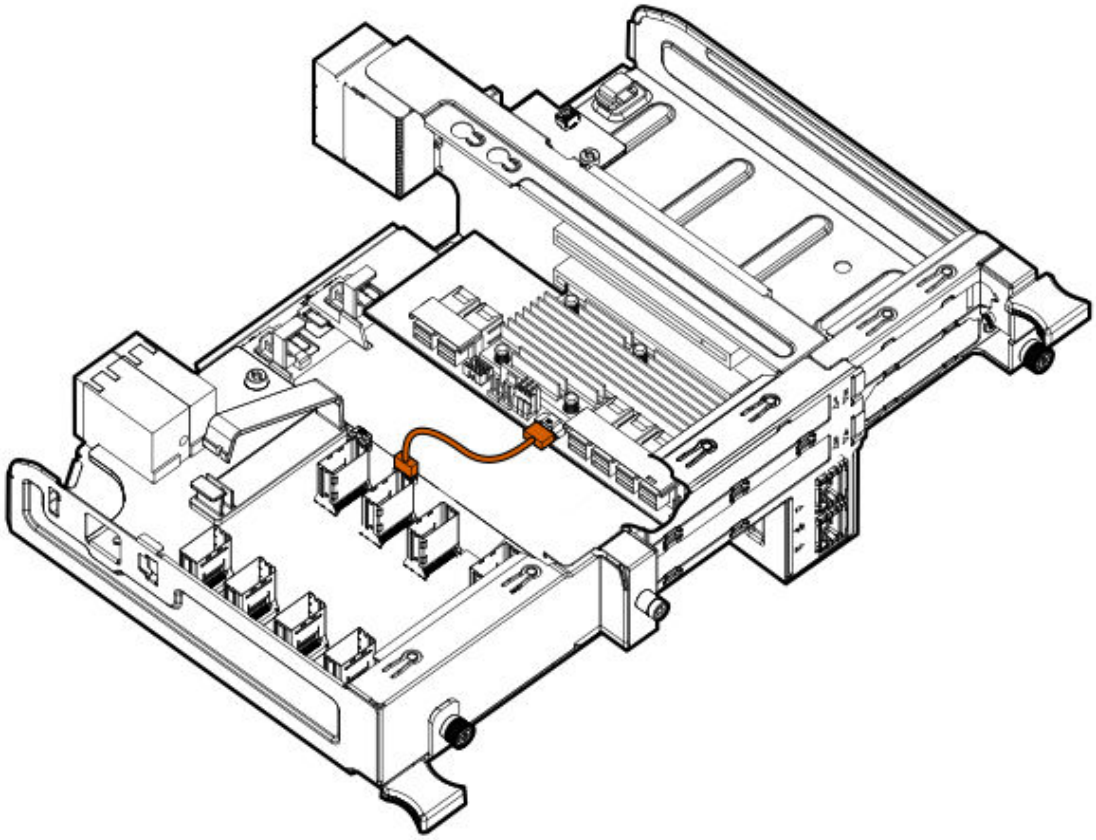

- Dual-board option

Figure 9: SAS cabling with dual P824i-p controllers

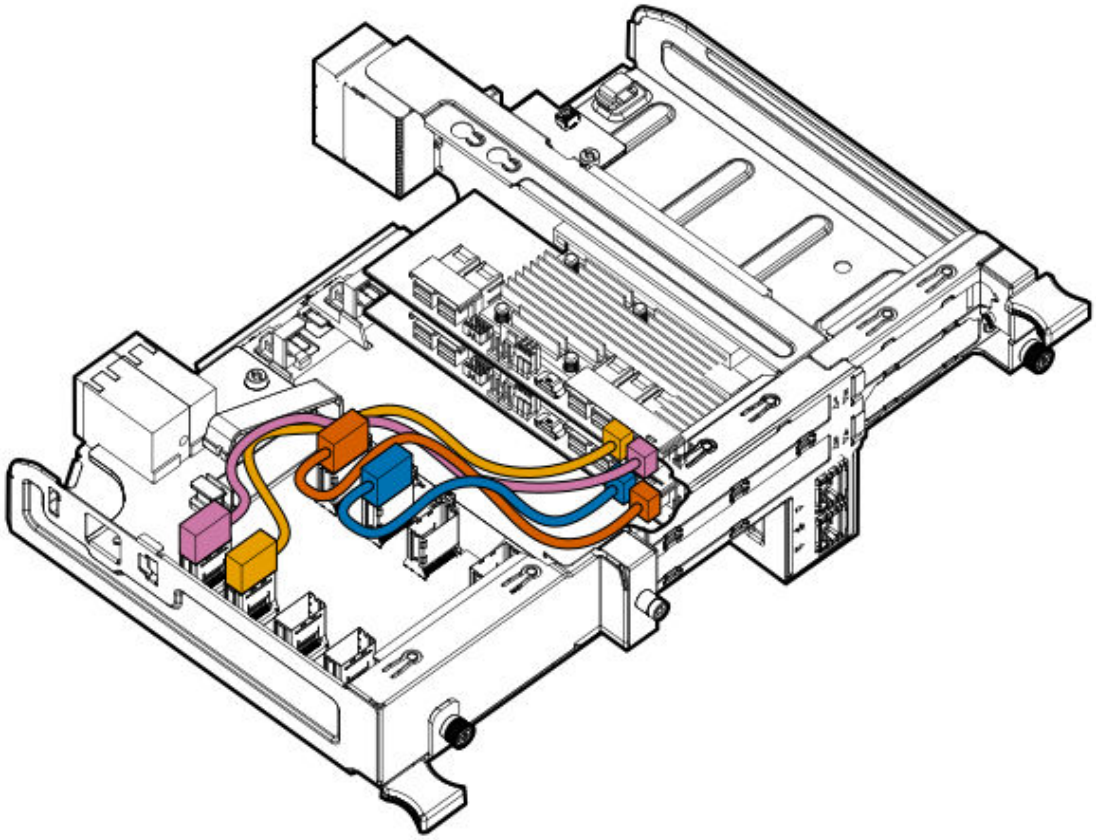

Figure 10: Smart Storage cache backup power cabling with dual P824i-p controllers

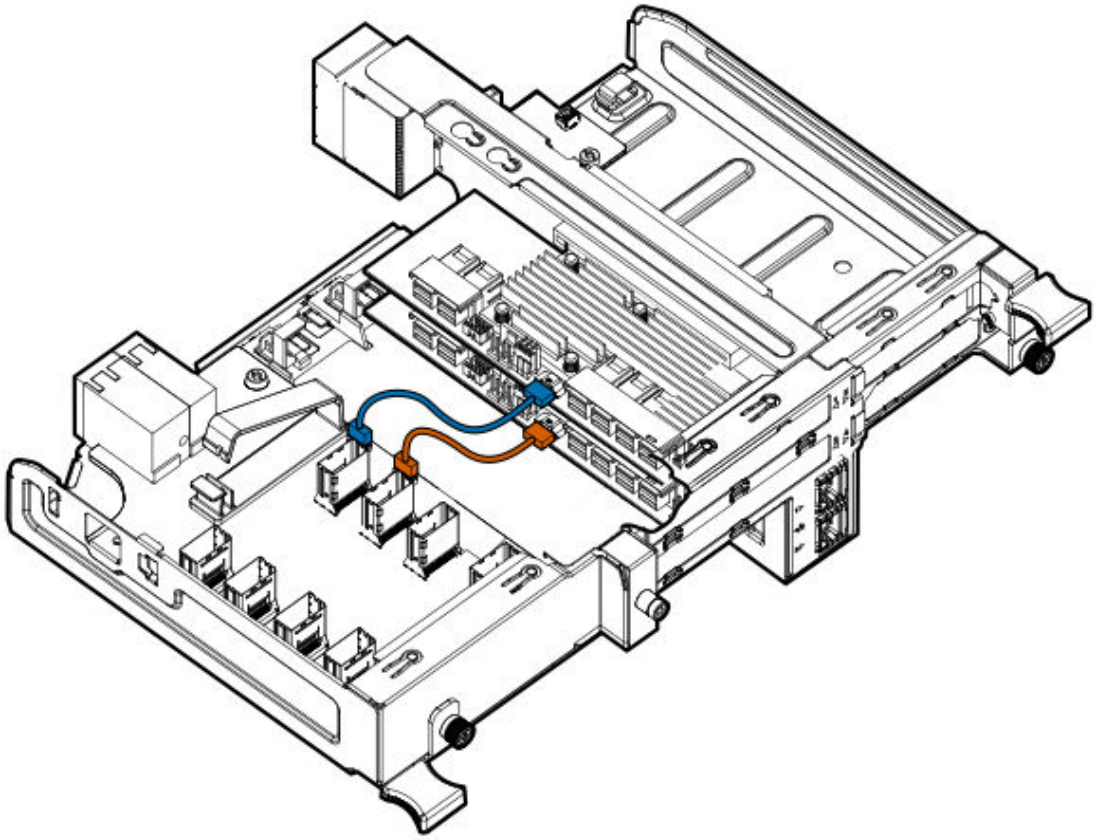

More information

Controller backup power connectors

HPE Smart Storage Battery cabling

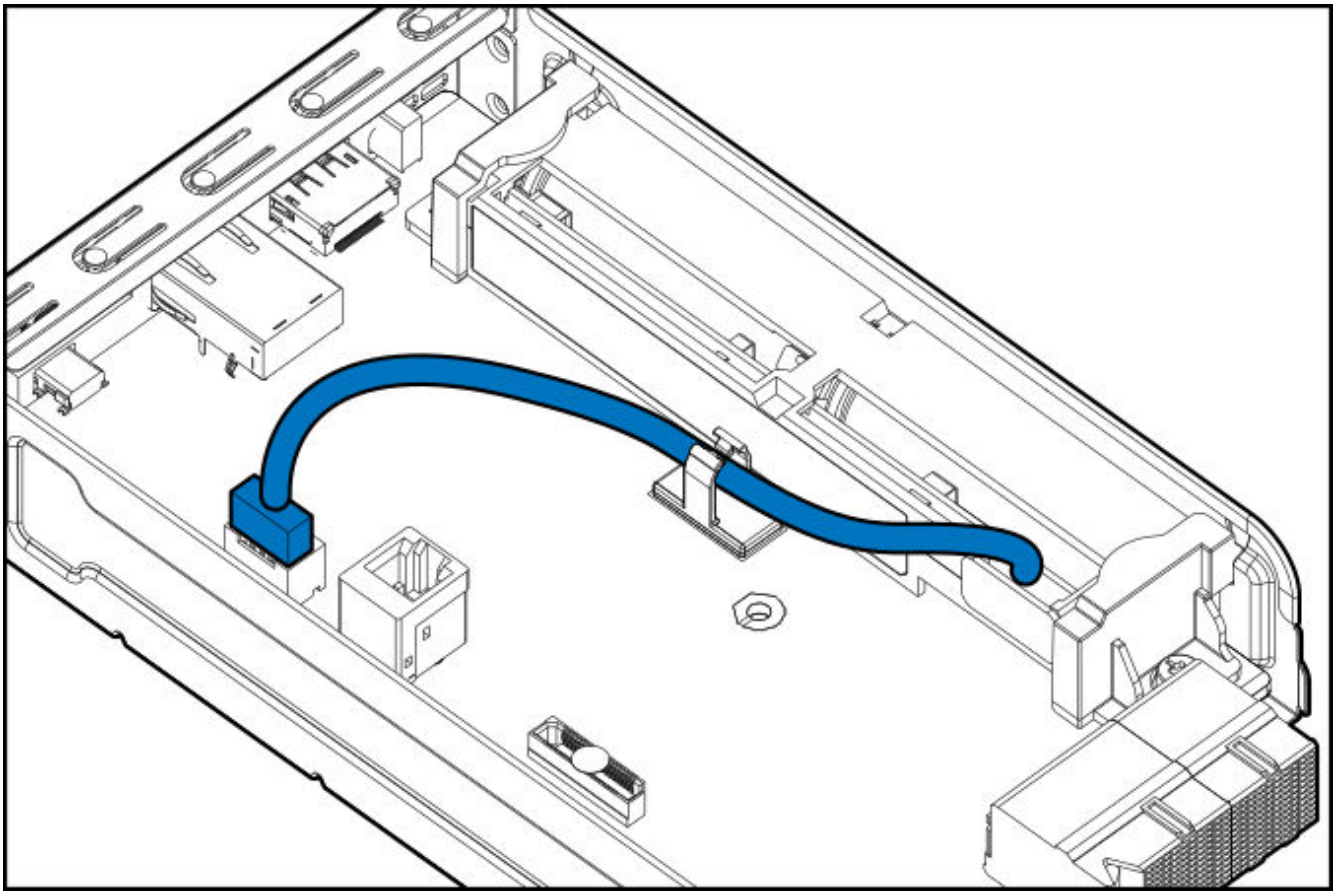

Drive drawer cabling

The drive drawer data cables connect to the rear of each drive drawer and route to the connectors on the midplane. Be sure to connect Port 1 to Port 1 and Port 2 to Port 2 as shown. Port 1 (shown in red) and Port 2 (shown in blue) are labeled on the midplane.

Figure 11: Drive drawer data cables (drive drawer connections)

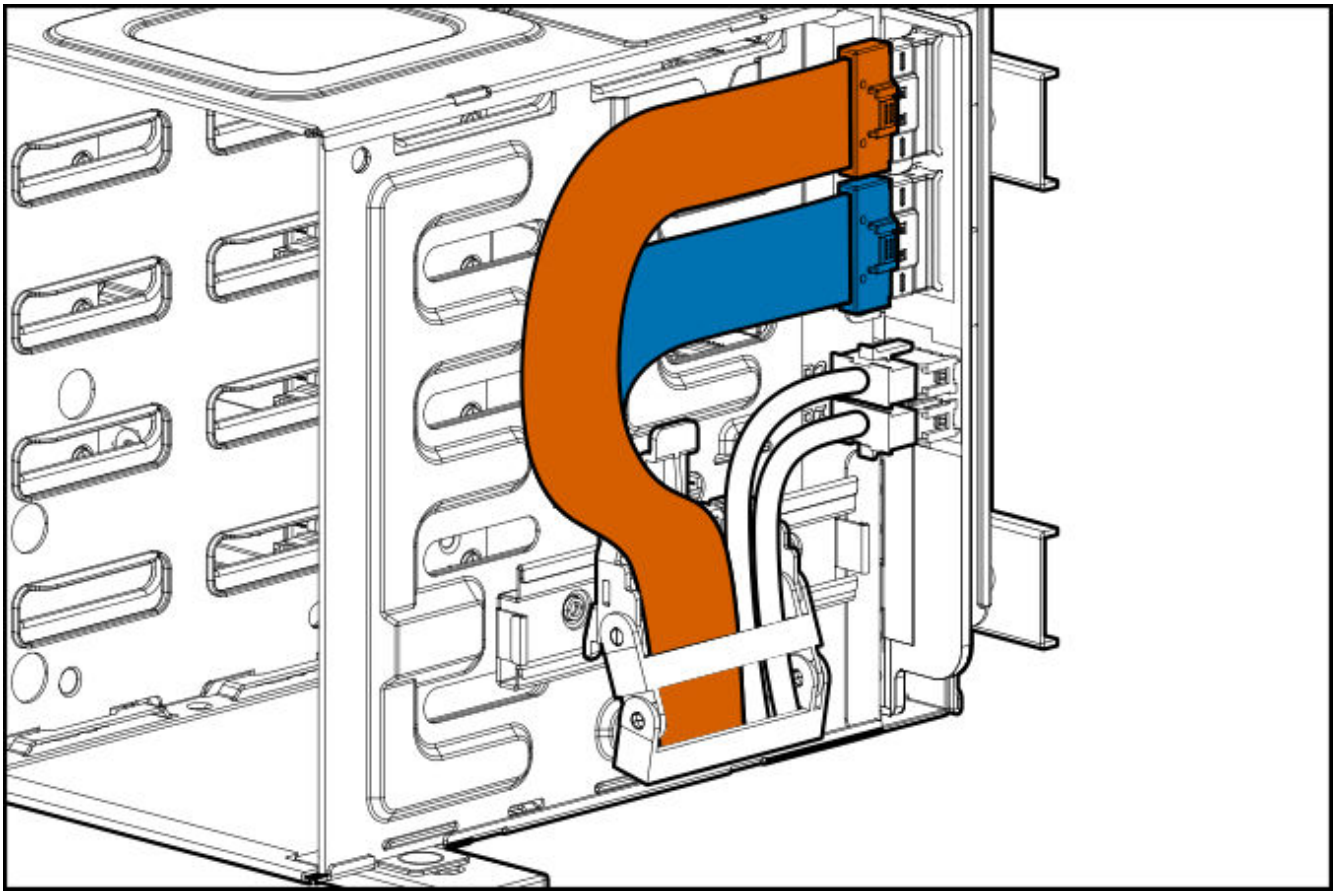

Figure 12: Drive drawer data cables (midplane connections)

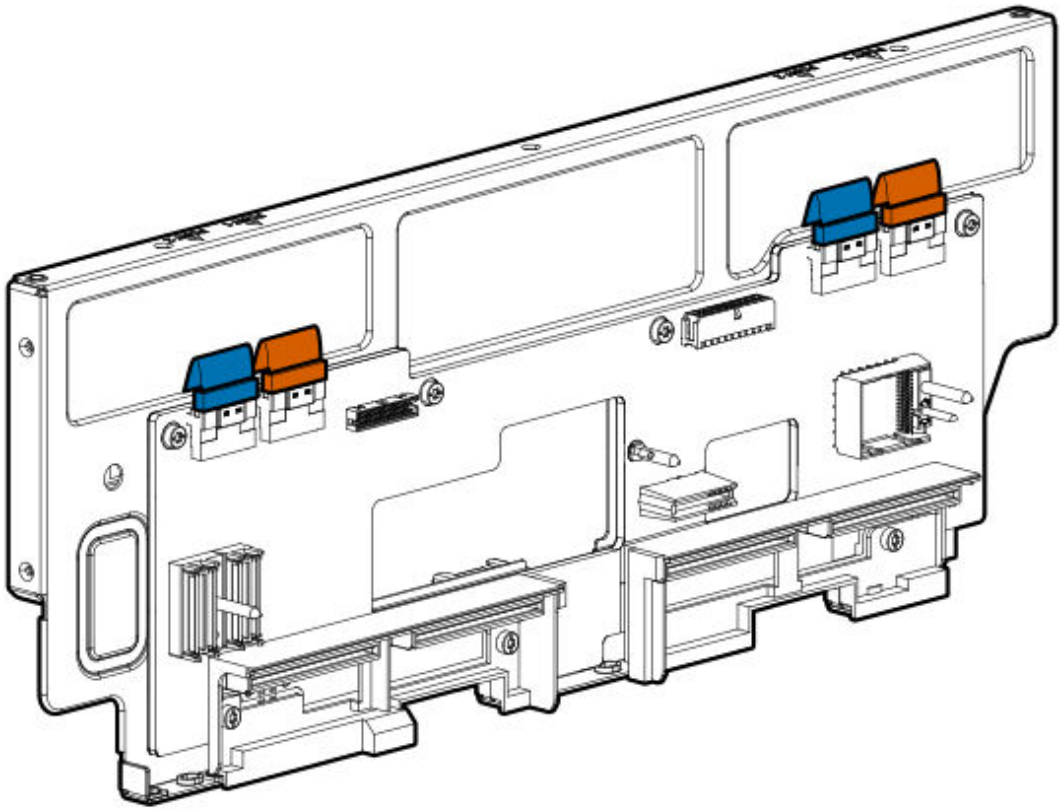

Fan cabling

To provide better visibility of the components, this cabling diagram is altered to show the connectors on the midplane and fans while outside of the chassis. The cable dimensions are not to scale for the purposes of this image.

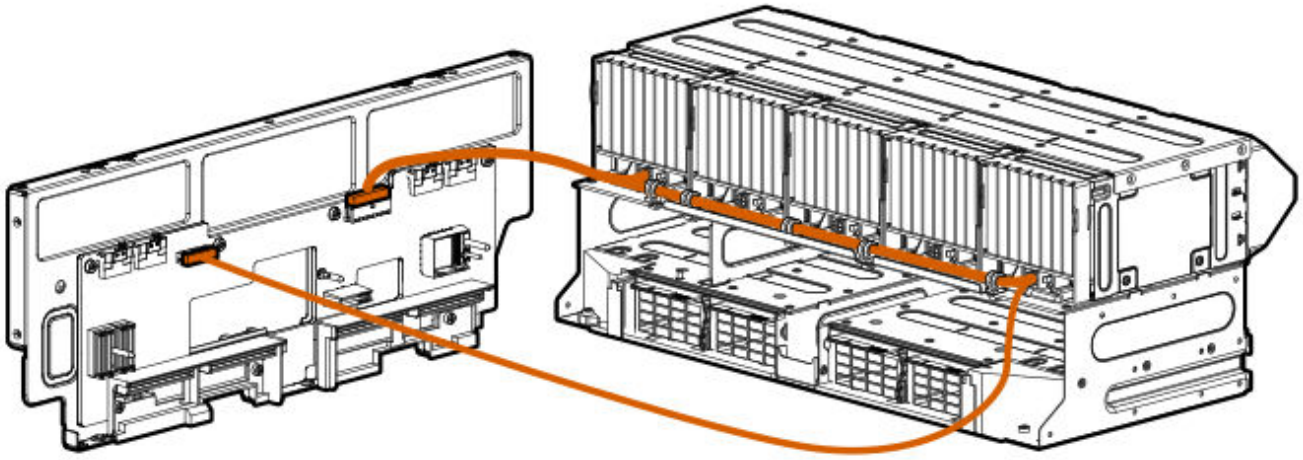

Specifications

Environmental specifications

Specification	Value
Temperature range [1]	
Operating	10°C to 35°C (50°F to 95°F)
Shipping	-40°C to 70°C (-40°F to 158°F)
Maximum wet bulb temperature	28°C (82.4°F)
Relative humidity (noncondensing) [2]	
Operating	10% to 90%
Nonoperating	5% to 95%

[1] All temperature ratings shown are for sea level. An altitude derating of 1°C per 300 m (1.8°F per 1,000 ft) to 3,048 m (10,000 ft) is applicable. No direct sunlight allowed.

[2] Storage maximum humidity of 95% is based on a maximum temperature of 45°C (113°F). Altitude maximum for storage corresponds to a pressure minimum of 70 kPa.

Chassis specifications

Specification	Value
Height	17.58 cm (6.92 in)
Depth	92.76 cm (36.52 in)
Width	44.8 cm (17.64 in)
Weight (fully loaded)	105 kg (231 lbs)
Weight (empty)	61 kg (135 lbs)

Power supply specifications

Depending on installed options, the server is configured with one of the following power supplies:

- HPE 800 W Flex Slot Platinum Hot-plug Low Halogen Power Supply
- HPE 800 W Flex Slot -48 VDC Hot-plug Low Halogen Power Supply
- HPE 800 W Flex Slot Titanium Hot-plug Low Halogen Power Supply
- HPE 800 W Flex Slot Universal Hot-plug Low Halogen Power Supply
- HPE 1600 W Flex Slot Platinum Hot-plug Low Halogen Power Supply

For detailed power supply specifications, see the QuickSpecs on the Hewlett Packard Enterprise website (**http://www.hpe.com/info/proliant/powersupply**).

HPE 800 W Flex Slot Platinum Hot-plug Low Halogen Power Supply

Specification	Value
Input requirements	—
Rated input voltage	100 VAC to 127 VAC 200 VAC to 240 VAC 240 VDC for China only
Rated input frequency	50 Hz to 60 Hz Not applicable to 240 VDC
Rated input current	9.1 A at 100 VAC 4.4 A at 200 VAC 3.6 A at 240 VDC for China only
Maximum rated input power	899 W at 100 VAC 867 W at 200 VAC 864 W at 240 VDC for China only
BTUs per hour	3067 at 100 VAC 2958 at 200 VAC 2949 at 240 VAC for China only
Power supply output	—
Rated steady-state power	800 W at 100 VAC to 127 VAC input 800 W at 100 VAC to 240 VAC input 800 W at 240 VDC input for China only
Maximum peak power	800 W at 100 VAC to 127 VAC input 800 W at 100 VAC to 240 VAC input 800 W at 240 VDC input for China only

HPE 800 W Flex Slot -48 VDC Hot-plug Low Halogen Power Supply

Specification	Value
Input requirements	—
Rated input voltage	-40 VDC to -72 VDC -48 VDC nominal input
Rated input current	22.1 A at -40 VDC input 18.2 A at -48 VDC input, nominal input 12.0 A at -72 VDC input
Rated input power	874 W at -40 VDC input 865 W at -48 VDC input, nominal input 854 W at -72 VDC input
Rated input power (BTUs per hour)	2983 at -40 VDC input 2951 at -48 VDC input, nominal input 2912 at -72 VDC input
Power supply output	—
Rated steady-state power	800 W at -40 VDC to -72 VDC
Maximum peak power	800 W at -40 VDC to -72 VDC
Maximum peak power	800 W at -40 VDC to -72 VDC input

WARNING: To reduce the risk of electric shock or energy hazards:

- This equipment must be installed by trained service personnel.
- Connect the equipment to a reliably grounded secondary circuit source. A secondary circuit has no direct connection to a primary circuit and derives its power from a transformer, converter, or equivalent isolation device.
- The branch circuit overcurrent protection must be rated 27 A.

CAUTION: This equipment is designed to permit the connection of the earthed conductor of the DC supply circuit to the earthing conductor at the equipment.

If this connection is made, all of the following must be met:

- This equipment must be connected directly to the DC supply system earthing electrode conductor or to a bonding jumper from an earthing terminal bar or bus to which the DC supply system earthing electrode conductor is connected.
- This equipment must be located in the same immediate area (such as adjacent cabinets) as any other equipment that has a connection between the earthed conductor of the same DC supply circuit and the earthing conductor, and also the point of earthing of the DC system. The DC system must be earthed elsewhere.
- The DC supply source is to be located within the same premises as the equipment.
- Switching or disconnecting devices must not be in the earthed circuit conductor between the DC source and the point of connection of the earthing electrode conductor.

HPE 800 W Flex Slot Titanium Hot-plug Low Halogen Power Supply

Specification	Value
Input requirements	—
Rated input voltage	200 VAC to 240 VAC 240 VDC for China only
Rated input frequency	50 Hz to 60 Hz Not applicable to 240 VDC
Rated input current	4.3 A at 200 VAC 3.6 A at 240 VAC 3.6 A at 240 VDC for China only
Maximum rated input power	851 W at 200 VAC

Specification	Value
	848 W at 240 VAC 848 W at 240 VDC for China only
BTUs per hour	2905 at 200 VAC 2893 at 240 VAC 2893 at 240 VDC for China only
Power supply output	—
Rated steady-state power	800 W at 200 VAC to 240 VAC input 800 W at 240 VDC input for China only
Maximum peak power	800 W at 200 VAC to 240 VAC input 800 W at 240 VDC input for China only

HPE 800 W Flex Slot Universal Hot-plug Low Halogen Power Supply

Specification	Value
Input requirements	—
Rated input voltage	200 VAC to 277 VAC 380 VDC
Rated input frequency	50 Hz to 60 Hz
Rated input current	4.4 A at 200 VAC 3.8 A at 230 VAC 2.3 A at 380 VDC
Maximum rated input power	869 W at 200 VAC 865 W at 230 VAC 861 W at 277 VAC 863 W at 380 VDC
BTUs per hour	2964 at 200 VAC

Specification	Value
	2951 at 230 VAC 2936 at 277 VAC 2943 at 380 VDC
Power supply output	—
Rated steady-state power	800 W at 200 VAC to 277 VAC input
Maximum peak power	800 W at 200 VAC to 277 VAC input

HPE 1600 W Flex Slot Platinum Hot-plug Low Halogen Power Supply

Specification	Value
Input requirements	—
Rated input voltage	200 VAC to 240 VAC 240 VDC for China only
Rated input frequency	50 Hz to 60 Hz
Rated input current	8.7 A at 200 VAC 7.5 A at 230 VAC
Maximum rated input power	1734 W at 200 VAC 1727 W at 230 VAC
BTUs per hour	5918 at 200 VAC 5891 at 230 VAC
Power supply output	—
Rated steady-state power	1600 W at 200 VAC to 240 VAC input 1600 W at 240 VDC input

Specification	Value
Maximum peak power	2200 W for 1 ms (turbo mode) at 200 VAC to 240 VAC input

Hot-plug power supply calculations

For hot-plug power supply specifications and calculators to determine electrical and heat loading for the server, see the Hewlett Packard Enterprise Power Advisor website (**https://www.hpe.com/info/poweradvisor/online**).

Support and other resources

Accessing Hewlett Packard Enterprise Support

- For live assistance, go to the Contact Hewlett Packard Enterprise Worldwide website:

  https://www.hpe.com/info/assistance

- To access documentation and support services, go to the Hewlett Packard Enterprise Support Center website:

  https://www.hpe.com/support/hpesc

Information to collect

- Technical support registration number (if applicable)
- Product name, model or version, and serial number
- Operating system name and version
- Firmware version

- Error messages
- Product-specific reports and logs
- Add-on products or components
- Third-party products or components

Accessing updates

- Some software products provide a mechanism for accessing software updates through the product interface. Review your product documentation to identify the recommended software update method.
- To download product updates:

  Hewlett Packard Enterprise Support Center

  https://www.hpe.com/support/hpesc

  Hewlett Packard Enterprise Support Center: Software downloads

  https://www.hpe.com/support/downloads

  My HPE Software Center

  https://www.hpe.com/software/hpesoftwarecenter

- To subscribe to eNewsletters and alerts:

  https://www.hpe.com/support/e-updates

- To view and update your entitlements, and to link your contracts and warranties with your profile, go to the Hewlett Packard Enterprise Support Center **More Information on Access to Support Materials** page:

  https://www.hpe.com/support/AccessToSupportMaterials

> **IMPORTANT:**
> Access to some updates might require product entitlement when accessed through the Hewlett Packard Enterprise Support Center. You must have an HPE Passport set up with relevant entitlements.

Remote support

Remote support is available with supported devices as part of your warranty or contractual support agreement. It provides intelligent event diagnosis, and automatic, secure submission of hardware event notifications to Hewlett Packard Enterprise, which initiates a fast and accurate resolution based on the service level of your product. Hewlett Packard Enterprise strongly recommends that you register your device for remote support.

If your product includes additional remote support details, use search to locate that information.

HPE Get Connected

https://www.hpe.com/services/getconnected

HPE Pointnext Tech Care

https://www.hpe.com/services/techcare

HPE Complete Care

https://www.hpe.com/services/completecare

Warranty information

To view the warranty information for your product, see the links provided below:

HPE ProLiant and IA-32 Servers and Options

https://www.hpe.com/support/ProLiantServers-Warranties

HPE Enterprise and Cloudline Servers

https://www.hpe.com/support/EnterpriseServers-Warranties

HPE Storage Products

https://www.hpe.com/support/Storage-Warranties

HPE Networking Products

https://www.hpe.com/support/Networking-Warranties

Regulatory information

To view the regulatory information for your product, view the Safety and Compliance Information for Server, Storage, Power, Networking, and Rack Products, available at the Hewlett Packard Enterprise Support Center:

https://www.hpe.com/support/Safety-Compliance-EnterpriseProducts

Additional regulatory information

Hewlett Packard Enterprise is committed to providing our customers with information about the chemical substances in our products as needed to comply with legal requirements such as REACH (Regulation EC No 1907/2006 of the European Parliament and the Council). A chemical information report for this product can be found at:

https://www.hpe.com/info/reach

For Hewlett Packard Enterprise product environmental and safety information and compliance data, including RoHS and REACH, see:

https://www.hpe.com/info/ecodata

For Hewlett Packard Enterprise environmental information, including company programs, product recycling, and energy efficiency, see:

https://www.hpe.com/info/environment

Documentation feedback

Hewlett Packard Enterprise is committed to providing documentation that meets your needs. To help us improve the documentation, use the **Feedback** button and icons (located at the bottom of an opened document) on the Hewlett Packard Enterprise Support Center portal (**https://www.hpe.com/support/hpesc**) to send any errors, suggestions, or comments. All document information is captured by the process.