HPE Apollo 4510 Gen10 Chassis Setup and Installation Guide

Part Number: 20-APL4510-SIG-ED7
Published: March 2022
Edition: 7

HPE Apollo 4510 Gen10 Chassis Setup and Installation Guide

Abstract
This document contains setup, installation, and configuration information for the HPE Apollo 4510 Gen10 Chassis. This document is for the person who installs, administers, and troubleshoots servers and storage systems. Hewlett Packard Enterprise assumes you are qualified in the servicing of computer equipment and trained in recognizing hazards in products with hazardous energy levels.

Part Number: 20-APL4510-SIG-ED7
Published: March 2022
Edition: 7

© Copyright 2017, 2022 Hewlett Packard Enterprise Development LP

Notices

The information contained herein is subject to change without notice. The only warranties for Hewlett Packard Enterprise products and services are set forth in the express warranty statements accompanying such products and services. Nothing herein should be construed as constituting an additional warranty. Hewlett Packard Enterprise shall not be liable for technical or editorial errors or omissions contained herein.

Confidential computer software. Valid license from Hewlett Packard Enterprise required for possession, use, or copying. Consistent with FAR 12.211 and 12.212, Commercial Computer Software, Computer Software Documentation, and Technical Data for Commercial Items are licensed to the U.S. Government under vendor's standard commercial license.

Links to third-party websites take you outside the Hewlett Packard Enterprise website. Hewlett Packard Enterprise has no control over and is not responsible for information outside the Hewlett Packard Enterprise website.

Acknowledgments

Microsoft® and Windows® are either registered trademarks or trademarks of Microsoft Corporation in the United States and/or other countries.

Table of contents

Planning the installation....6
- Verifying the pallet contents....6
- Warnings and cautions....7
- Space and airflow requirements....9
- Temperature requirements....9
- Power requirements....10
- Grounding requirements....10

Identifying components and LEDs....11
- Front panel components....11
  - Drive Drawer LEDs....12
  - Server front panel components....13
  - Server front panel LEDs and buttons....14
- Rear panel components....15
  - Power supply LEDs....16
  - Management module components....17
  - Management module LEDs....18
  - I/O module components....19
  - I/O module LEDs....20
  - PCIe slot definitions....21
  - PCIe slot and processor mapping....22
  - I/O SAS board port identification....23
  - HPE Smart Array E208i-p SR Gen10 Controller port identification....24
  - HPE Smart Array P408i-p SR Gen10 Controller port identification....24
  - HPE Smart Array P824i-p MR Gen10 Controller port identification....25
  - Controller backup power connectors....26
  - HPE NS204i-p NVMe OS Boot Device components....27
  - HPE NS204i-p NVMe OS Boot Device LED definitions....28
- LFF drive bay numbering....29
- Low-profile LFF drive LED definitions....30
- DSC-25 2-port SFP28 card ports and LEDs....32

Installing the chassis....34
- Setting up and installing the chassis....34
- Disassembling the chassis....34
- Installing the chassis into the rack....45

Installing the system components into the chassis 53
Installing a server 53
Installing a hot-plug drive 55
Installing a flex slot power supply 56
Installing the system fan 57
HPE Smart Storage Battery 58
Installing the HPE Smart Storage Battery 59
Installing a management module 61
Installing an expansion board 62
Installing the HPE NS204i-p NVMe OS Boot Device option 67
Installing an I/O module 71
Installing a fan louver 72
Installing the midplane assembly 73
Cabling and powering up the chassis 75
Connecting the Management module to the network with the iLO ports 75
Connecting the optional HPE APM module 76
I/O module option cabling 77
HPE Smart Array E208i-p SR Gen10 Controller cabling 78
HPE Smart Array P408i-p SR Gen10 Controller cabling 79
HPE Smart Array P824i-p MR Gen10 Controller cabling 83
HPE Smart Storage Battery cabling 87
Powering up the system 88
Troubleshooting 88
Important safety information 89
Symbols on equipment 89
Troubleshooting resources 90
Specifications 91
Environmental specifications 91
Chassis specifications 92
Power supply specifications 92
HPE 800W Flex Slot Platinum Hot-plug Low Halogen Power Supply 93
HPE 800W Flex Slot -48VDC Hot-plug Low Halogen Power Supply 94
HPE 800W Flex Slot Titanium Hot-plug Low Halogen Power Supply 95
HPE 800W Flex Slot Universal Hot-plug Low Halogen Power Supply 96
HPE 1600 W Flex Slot Platinum Hot-plug Low Halogen Power Supply 97
Hot-plug power supply calculations 98
Environmental considerations 98
Communications interference 98

Electrostatic discharge 98
Preventing electrostatic discharge 99
Grounding methods to prevent electrostatic discharge 99
Websites 99
Support and other resources 100
Accessing Hewlett Packard Enterprise Support 100
Accessing updates 101
Remote support 101
Warranty information 102
Regulatory information 103
Documentation feedback 103

Planning the installation

Verifying the pallet contents

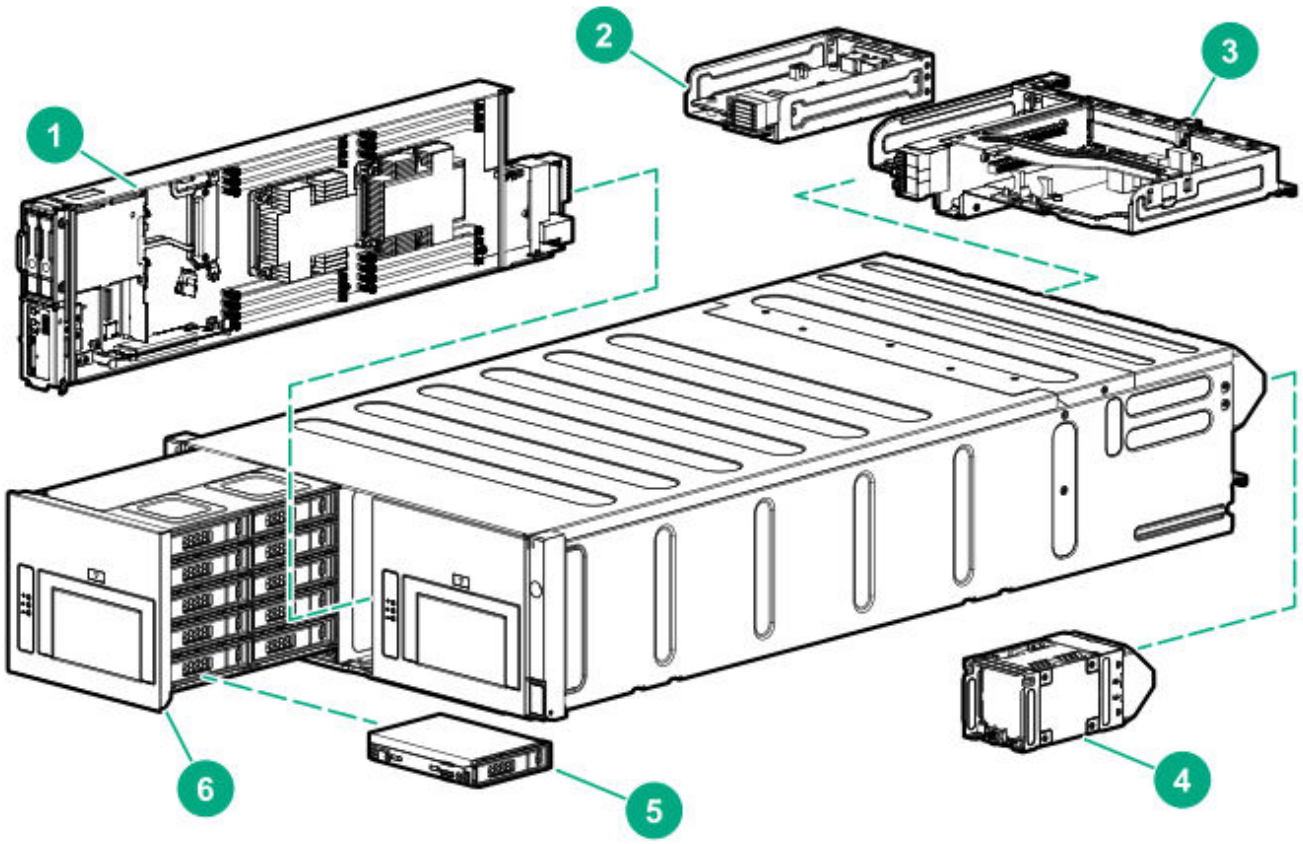

Item	Description
1	HPE ProLiant XL450 Gen10 Server
2	Management module
3	I/O module
4	System fan

Item	Description
5	LFF drive
6	Drive drawer

Warnings and cautions

WARNING: To reduce the risk of personal injury or damage to equipment, heed all warnings and cautions throughout the installation instructions.

WARNING: To reduce the risk of personal injury or damage to the equipment, be sure that:

- The rack is bolted to the floor using the concrete anchor kit.
- The leveling feet extend to the floor.
- The full weight of the rack rests on the leveling feet.
- The racks are coupled together in multiple rack installations.
- Only one component is extended at a time. If more than one component is extended, a rack might become unstable.

WARNING: To reduce the risk of personal injury or equipment damage, be sure that the rack is adequately stabilized before installing the chassis.

WARNING:
The chassis is very heavy. To reduce the risk of personal injury or damage to the equipment, do the following:

- Observe local occupational health and safety requirements and guidelines for manual material handling.
- Remove all installed components from the chassis before installing or moving the chassis.
- Get help to lift and stabilize the product during installation or removal, especially when the product is not fastened to the rails. The chassis weighs more than 102.00 kg (225.00 lb), so at least four people must lift the chassis into the rack together. An additional person may be required to help align the chassis if the chassis is installed higher than chest level. If you are using a mechanical lift to install the frame, two people are required to install the frame.

WARNING: To reduce the risk of personal injury or damage to the equipment, you must adequately support the chassis during installation and removal.

WARNING: Be sure to install enclosures starting from the bottom of the rack and work your way up the rack.

WARNING: To reduce the risk of personal injury from hot surfaces, allow the drives and the internal system components to cool before touching them.

WARNING: To reduce the risk of electric shock or damage to the equipment:

- Never reach inside the chassis while the system is powered up.
- Perform service on system components only as instructed in the user documentation.

CAUTION: Always be sure that equipment is properly grounded and that you follow proper grounding procedures before beginning any installation procedure. Improper grounding can result in ESD damage to electronic components. For more information, see Electrostatic discharge.

CAUTION: When performing non-hot-plug operations, you must power down the chassis and/or the system. However, it may be necessary to leave the chassis powered up when performing other operations, such as hot-plug installations or troubleshooting.

Space and airflow requirements

To enable servicing and ensure adequate airflow, observe the following spatial requirements when deciding where to install a rack:

- Leave a minimum clearance of 121.9 cm (48.0 in) in front of the rack and between rows of racks.
- Leave a minimum clearance of 76.2 cm (30.0 in) in back of the rack for a single row of racks or after the final row of racks.

Hewlett Packard Enterprise Rack products draw cool air in through the front and expel warm air through the rear of the enclosure. Therefore, the front of the rack enclosure must be adequately ventilated to enable ambient room air to enter the enclosure, and the rear of the enclosure must be adequately ventilated to enable the warm air to escape from the enclosure.

IMPORTANT: Do not block the ventilation openings.

If the front of the rack is not completely filled with components, the remaining gaps between the components can cause changes in the airflow, which can adversely affect cooling within the rack. Cover these gaps with blanking panels.

CAUTION: Always use blanking panels to fill empty vertical spaces in the rack. This arrangement ensures proper airflow. Using a rack without blanking panels results in improper cooling that can lead to thermal damage.

Racks provide proper server cooling from flow-through perforations in the front and rear doors that provide a 65% open area for ventilation.

Temperature requirements

To ensure continued safe and reliable equipment operation, install or position the rack in a well-ventilated, climate-controlled environment.

The operating temperature inside the rack is always higher than the room temperature and is dependent on the configuration of equipment in the rack. Check the TMRA for each piece of equipment before installation.

CAUTION:
To reduce the risk of damage to the equipment when installing third-party options:

- Do not permit optional equipment to impede airflow around the chassis or to increase the internal rack temperature beyond the maximum allowable limits.
- Do not exceed the manufacturer's TMRA.

Power requirements

Installation of this equipment must comply with local and regional electrical regulations governing the installation of IT equipment by licensed electricians. This equipment is designed to operate in installations covered by NFPA 70, 1999 Edition (National Electric Code) and NFPA-75, 1992 (code for Protection of Electronic Computer/Data Processing Equipment). For electrical power ratings on options, refer to the product rating label or the user documentation supplied with that option.

WARNING:
To reduce the risk of personal injury, fire, or damage to the equipment, do not overload the AC supply branch circuit that provides power to the rack. Consult the electrical authority having jurisdiction over wiring and installation requirements of your facility.

CAUTION:
Protect the chassis from power fluctuations and temporary interruptions with a regulating UPS. This device protects the hardware from damage caused by power surges and voltage spikes and keeps the chassis in operation during a power failure.

Grounding requirements

This equipment must be grounded properly for proper operation and safety. In the United States, you must install the equipment in accordance with NFPA 70, 1999 Edition (National Electric Code), Article 250, as well as any local and regional building codes.

In Canada, you must install the equipment in accordance with Canadian Standards Association, CSA C22.1, Canadian Electrical Code.

In all other countries, you must install the equipment in accordance with any regional or national electrical wiring codes, such as the International Electrotechnical Commission (IEC) Code 364, parts 1 through 7. Furthermore, you must be sure that all power distribution devices used in the installation, such as branch wiring and receptacles, are listed or certified grounding-type devices.

Because of the high ground-leakage currents associated with this equipment, Hewlett Packard Enterprise recommends the use of a PDU that is either permanently wired to the building's branch circuit or includes a nondetachable cord that is wired to an industrial-style plug. NEMA locking-style plugs or those complying with IEC 60309 are considered suitable for this purpose. Using common power outlet strips to supply power to this equipment is not recommended.

Identifying components and LEDs

Front panel components

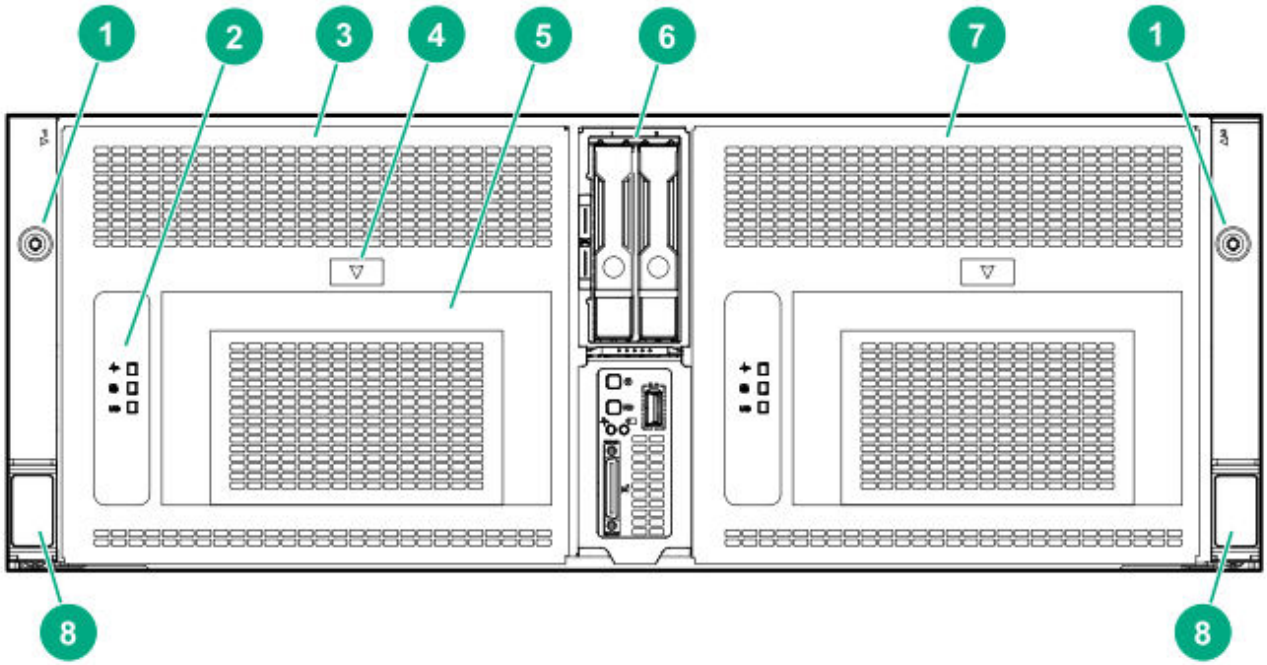

Item	Specification
1	Bezel ear screws (2)
2	Drive drawer LEDs
3	Drive drawer 1
4	Drive drawer release button
5	Drive drawer release levers
6	Server bay
7	Drive drawer 2
8	Quick-release levers

Drive Drawer LEDs

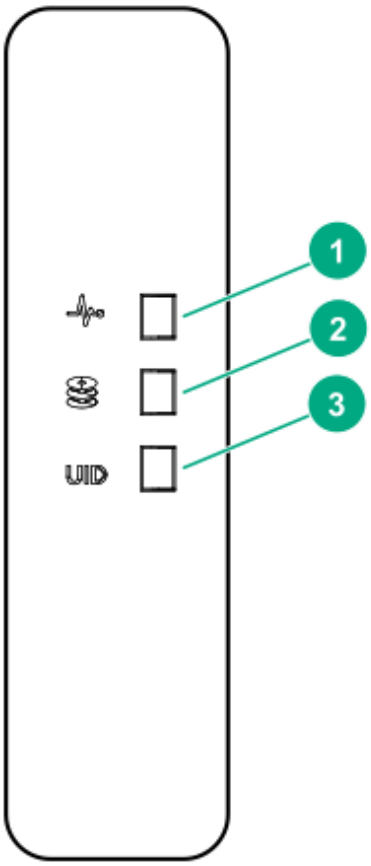

Item	Specification
1	Backplane health LED
2	Drive health LED
3	UID LED

Server front panel components

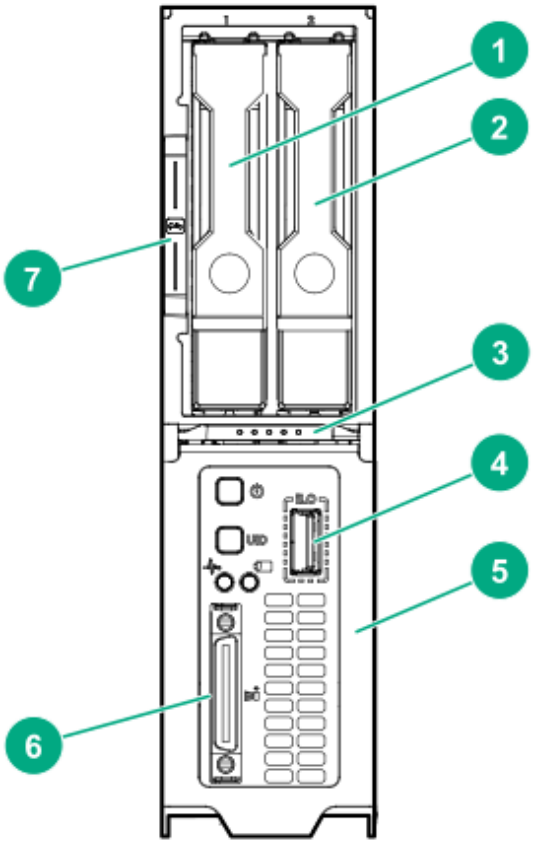

Item	Description
1	Drive bay 1
2	Drive bay 2
3	Server ejector button
4	iLO Service port
5	Server release lever
6	SUV cable connector
7	Serial label pull tab

Server front panel LEDs and buttons

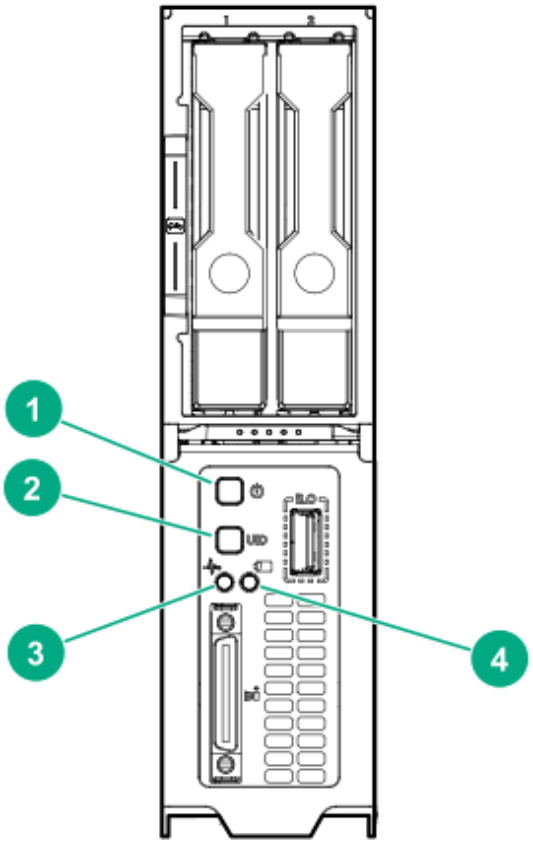

Item	Description	Status
1	Power On/Standby button and system power LED	Solid green = System on Flashing green (1 Hz/cycle per sec) = Performing power on sequence Solid amber = System in standby Off = No power present
2	UID LED/button	Solid blue = Activated Flashing blue: • 1 Hz/cycle per sec = Remote management or firmware upgrade in progress • 4 Hz/cycle per sec = iLO manual reboot sequence initiated • 8 Hz/cycle per sec = iLO manual reboot sequence in progress • 1 fast flash and then off for 3 seconds = iLO Service Port status is Complete • 4 medium flashes and then off for 1 second = iLO Service Port status is Busy • 8 fast flashes and then off for 1 second = iLO Service Port status is Error Off = Deactivated
3	Server health LED	Solid green = Normal Flashing green (1 Hz/cycle per sec) = iLO is rebooting Flashing amber = System degraded Flashing red (1 Hz/cycle per sec) = System critical
4	Server backup LED	Off = Normal operations. No backup in progress. Flashing white = Backup in progress. Do not remove drives, nodes, or associated system components, and do not power down the server.

Rear panel components

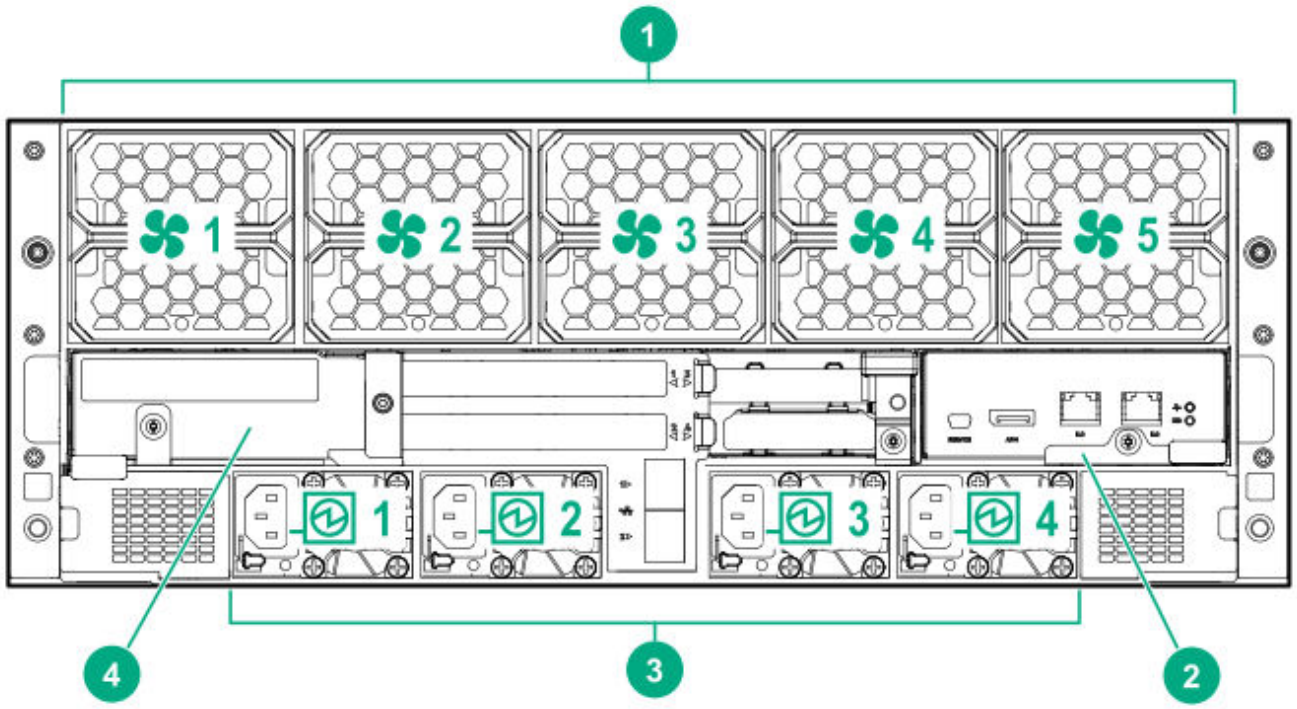

Item	Description
1	System fans
2	Management module
3	Power supply bays
4	I/O module

Power supply LEDs

The power supply LED is on each power supply.

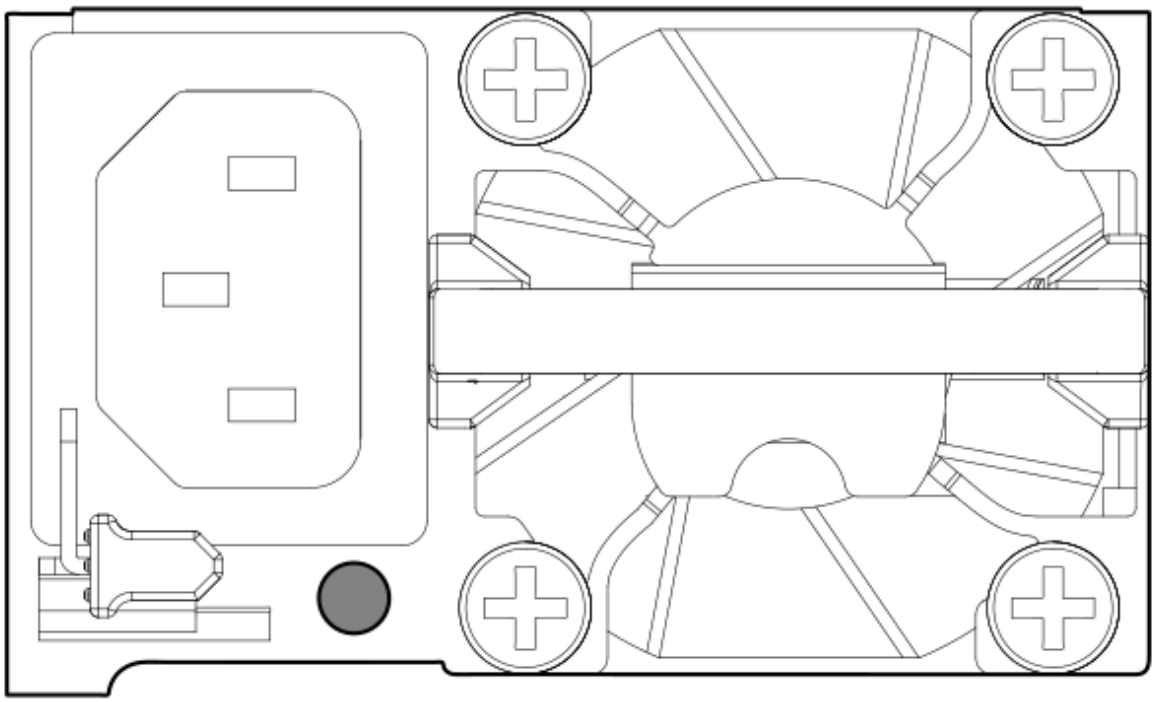

LED Status	Description
Off	System is off or power supply has failed.
Solid Green	Normal

Management module components

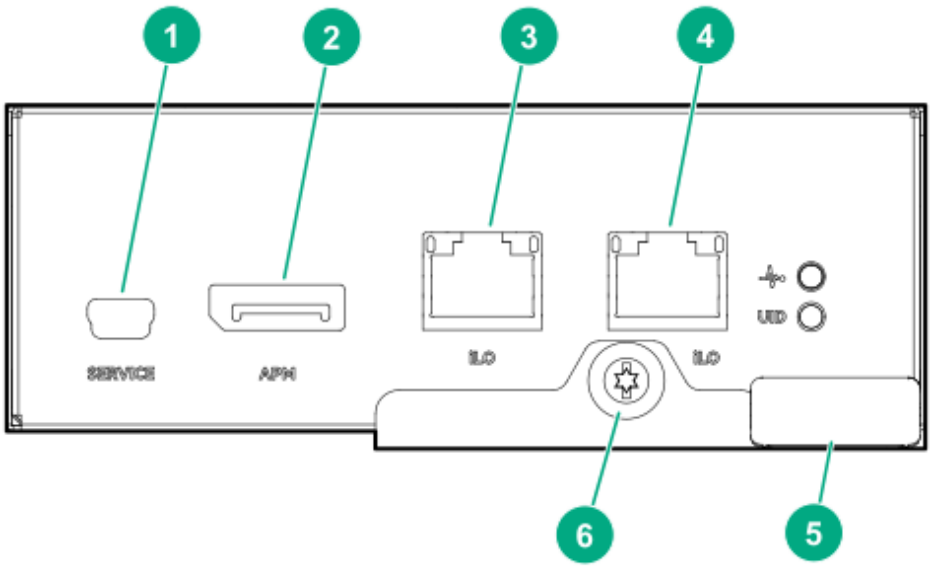

Item	Description
1	Reserved
2	APM connector
3	iLO port 1 (RJ-45)
4	iLO port 2 (RJ-45)
5	Management module release lever
6	Management module thumbscrew

Management module LEDs

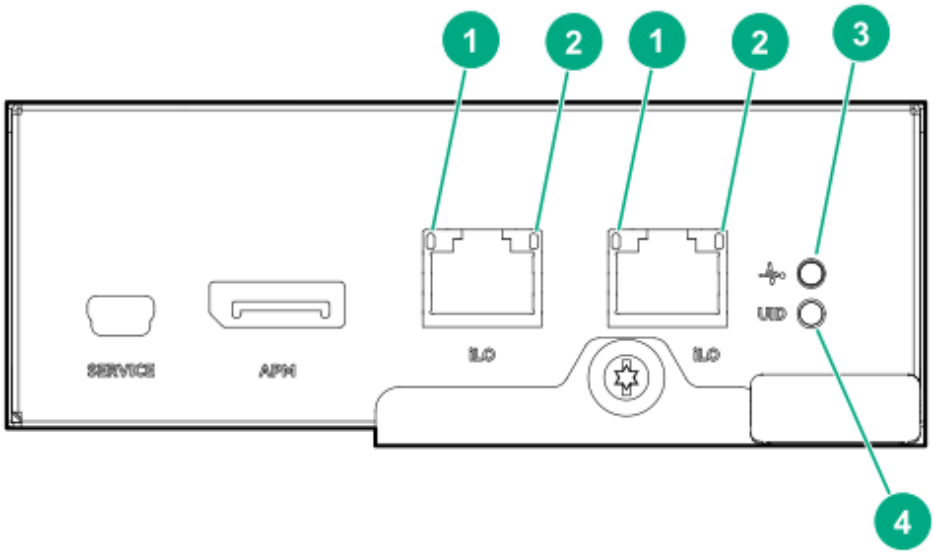

Item	Description
1	iLO (RJ-45) port link LEDs
2	iLO (RJ-45) port activity LEDs
3	Chassis health LED
4	Chassis UID LED

I/O module components

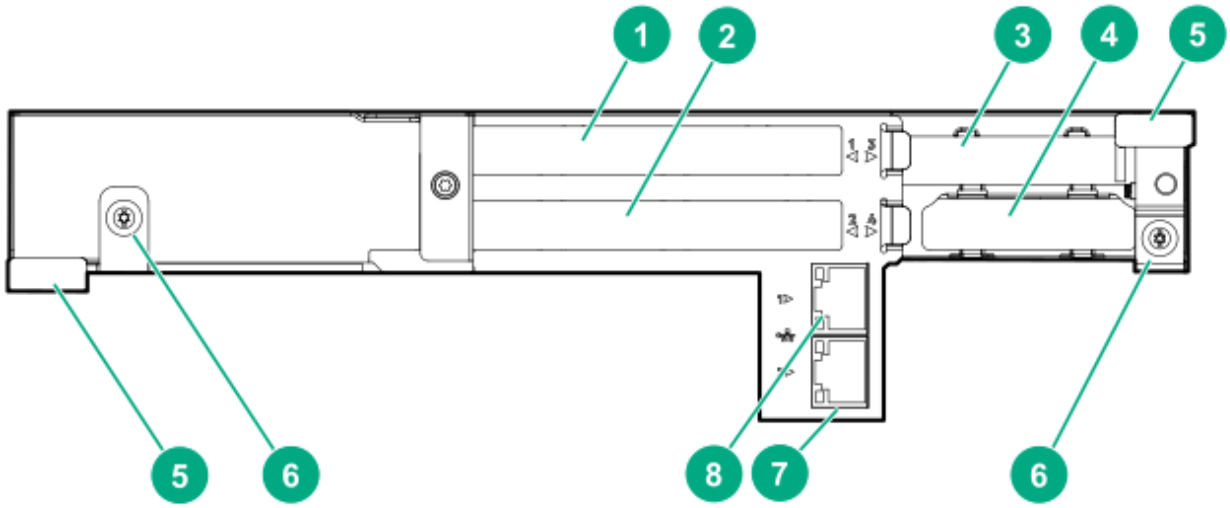

Item	Description
1	PCIe slot 1
2	PCIe slot 2
3	PCIe slot 3
4	FlexLOM slot
5	I/O module release levers (2)
6	I/O module thumbscrews (2)
7	NIC port 2
8	NIC port 1

More information

PCIe slot and processor mapping
PCIe slot definitions

I/O module LEDs

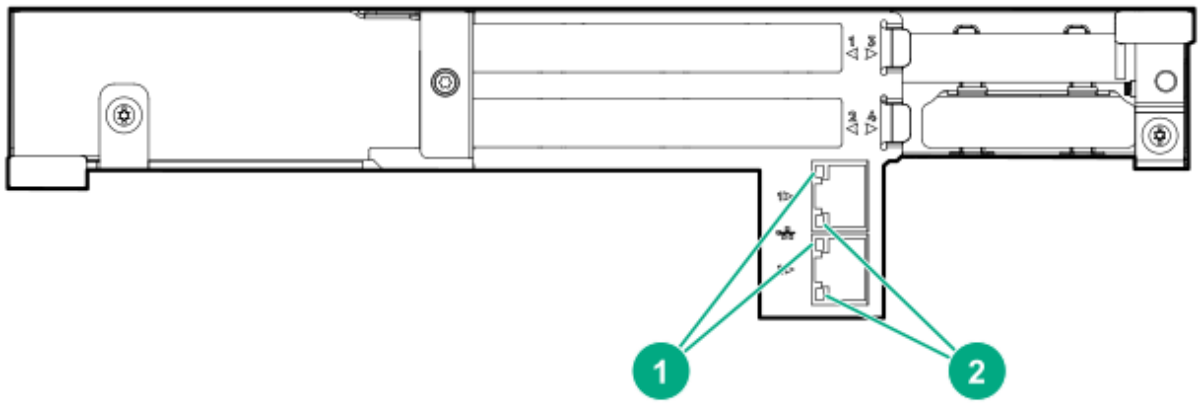

Item	Description
1	NIC activity LED
2	NIC link LED

PCIe slot definitions

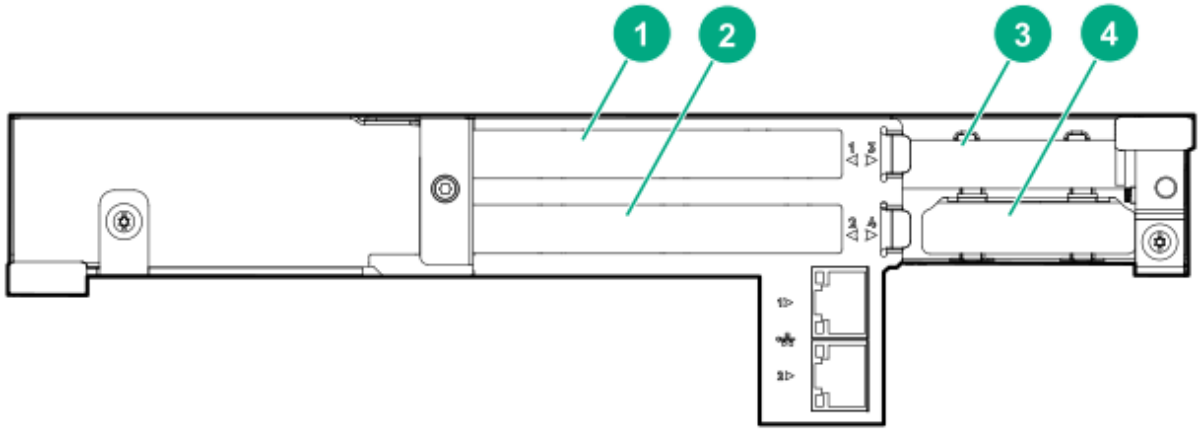

Item	2x/2x I/O module	3x/1x I/O module
1	PCIe expansion slot 1 — PCIe3 x16 (16, 8, 4, 2, 1)	PCIe expansion slot 1 — PCIe3 x8 (8, 4, 2, 1)
2	PCIe expansion slot 2 — PCIe3 x16 (16, 8, 4, 2, 1)	PCIe expansion slot 2 — PCIe3 x8 (8, 4, 2, 1)
3	PCIe expansion slot 3 — PCIe3 x16 (16, 8, 4, 2, 1)	PCIe expansion slot 3 — PCIe3 x16 (16, 8, 4, 2, 1)
4	FlexibleLOM slot — PCIe3 x8 (8, 4, 2, 1)	FlexibleLOM slot — PCIe3 x8 (8, 4, 2, 1)

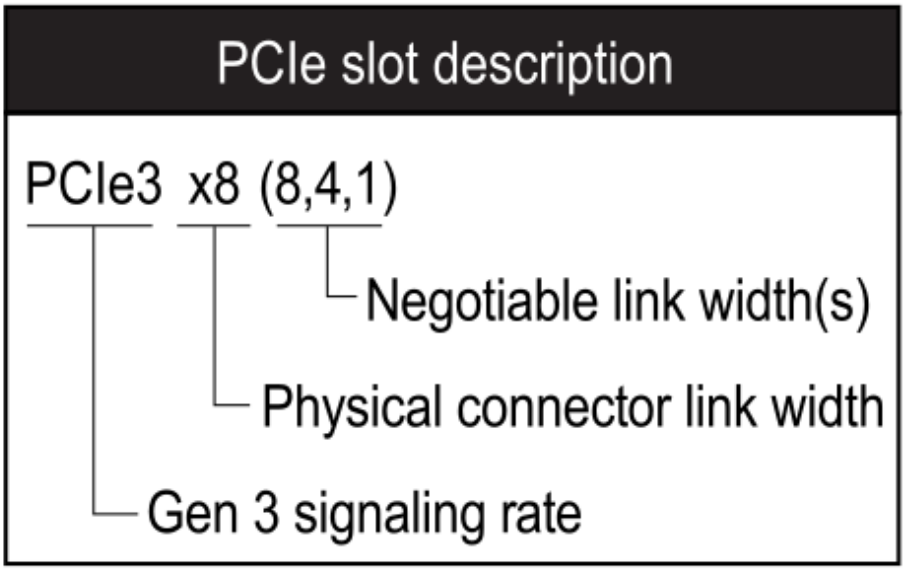

More information

PCIe slot and processor mapping
I/O module components

PCIe slot and processor mapping

PCIe slot	2x/2x I/O module	3x/1x I/O module
1	Processor 2	Processor 1
2	Processor 1	Processor 1
3	Processor 2	Processor 2
4	Processor 1	Processor 1

I/O SAS board port identification

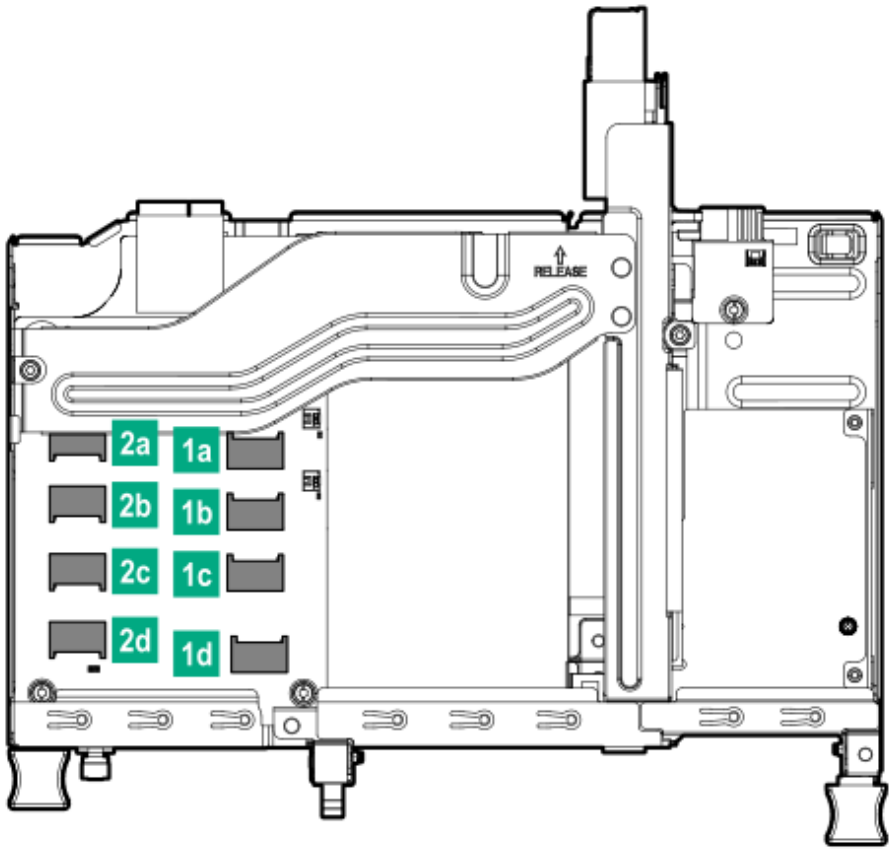

HPE Smart Array E208i-p SR Gen10 Controller port identification

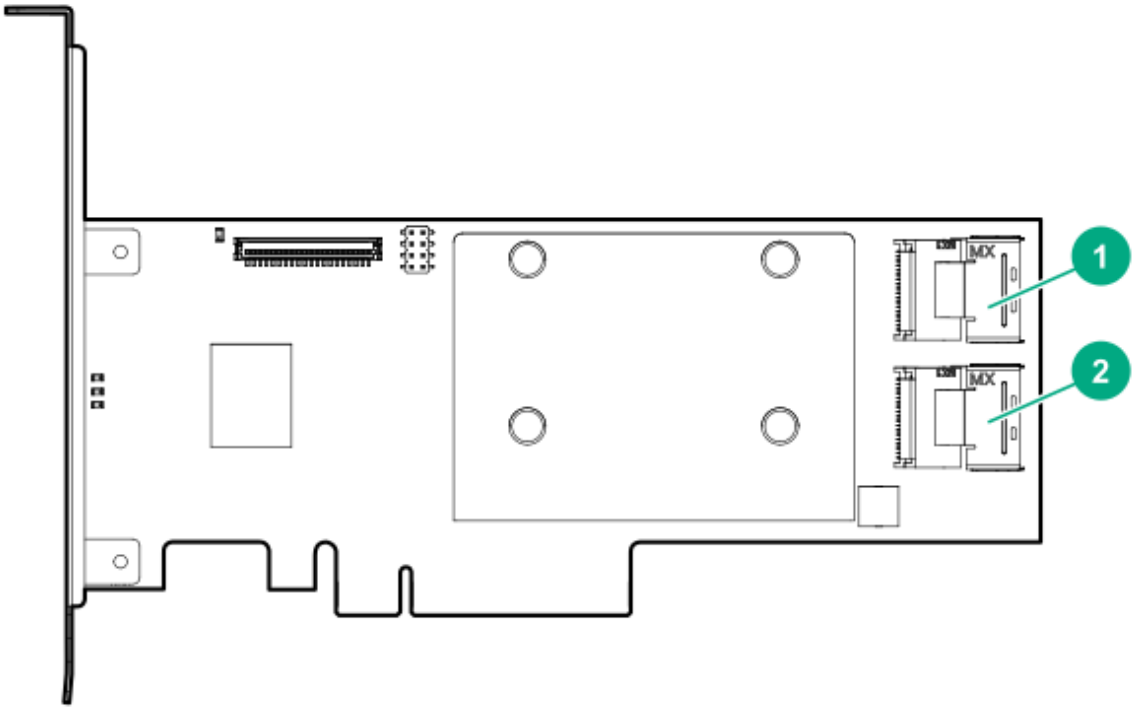

Item	Description
1	Internal x4 Mini SAS port 1
2	Internal x4 Mini SAS port 2

HPE Smart Array P408i-p SR Gen10 Controller port identification

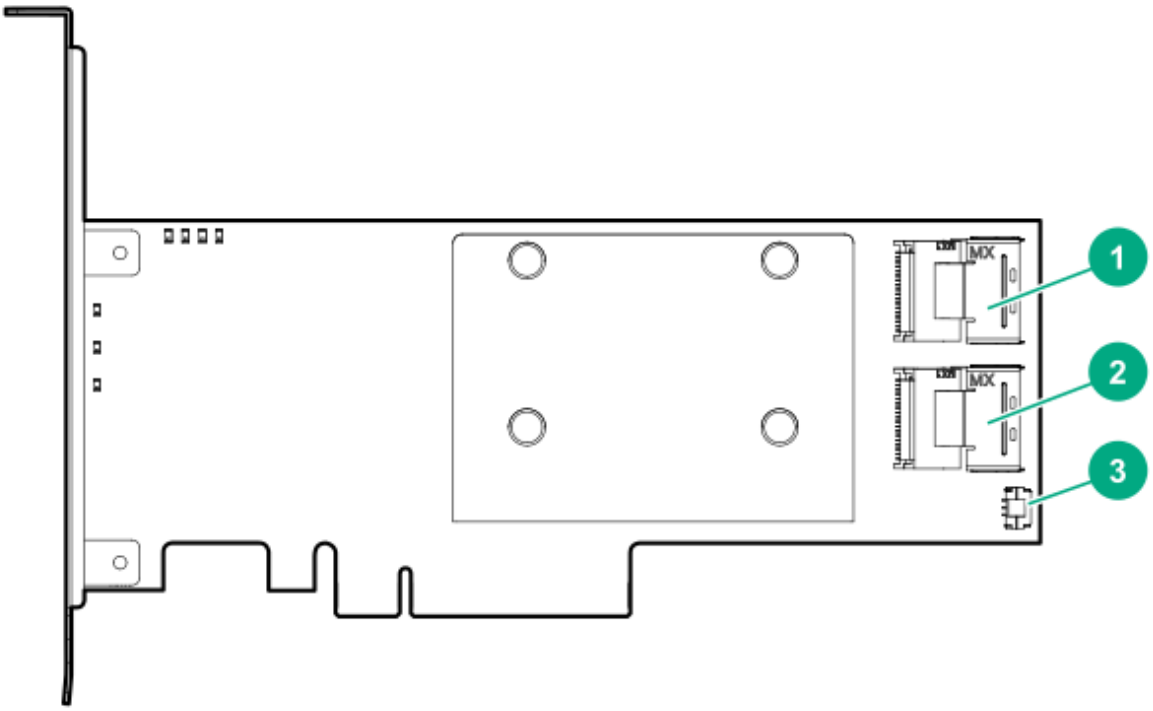

Item	Description
1	Internal x4 Mini SAS port 1
2	Internal x4 Mini SAS port 2
3	Energy pack connector

HPE Smart Array P824i-p MR Gen10 Controller port identification

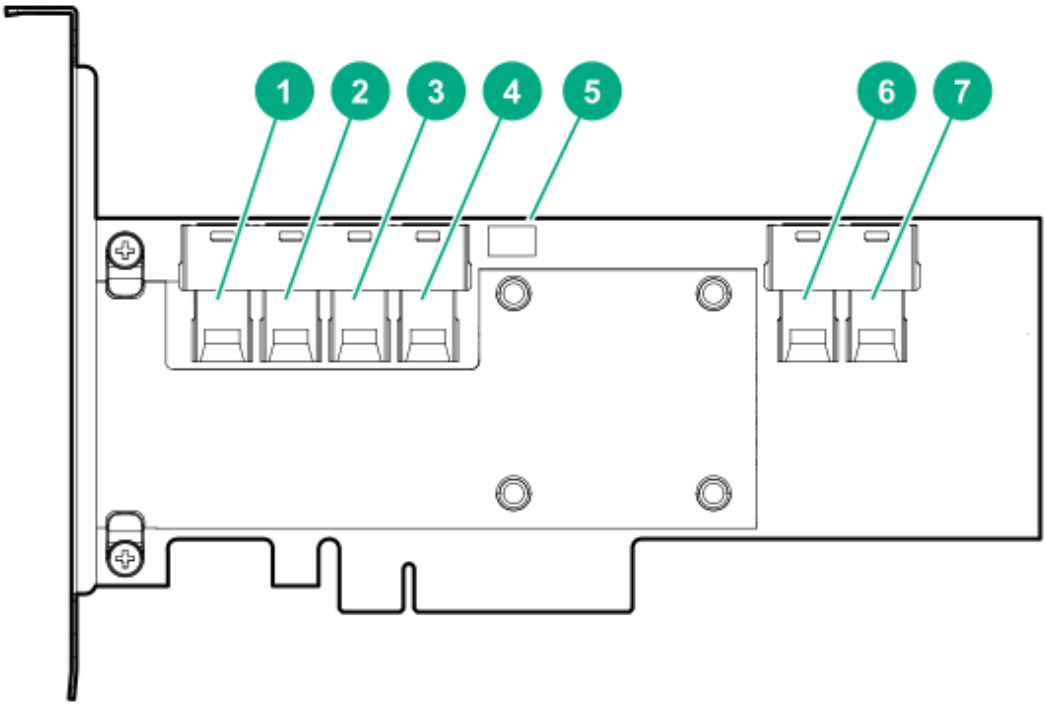

Item	Description
1	Internal SAS port 1i
2	Internal SAS port 2i
3	Internal SAS port 3i
4	Internal SAS port 4i
5	Energy pack connector
6	Internal SAS port 5i
7	Internal SAS port 6i

Controller backup power connectors

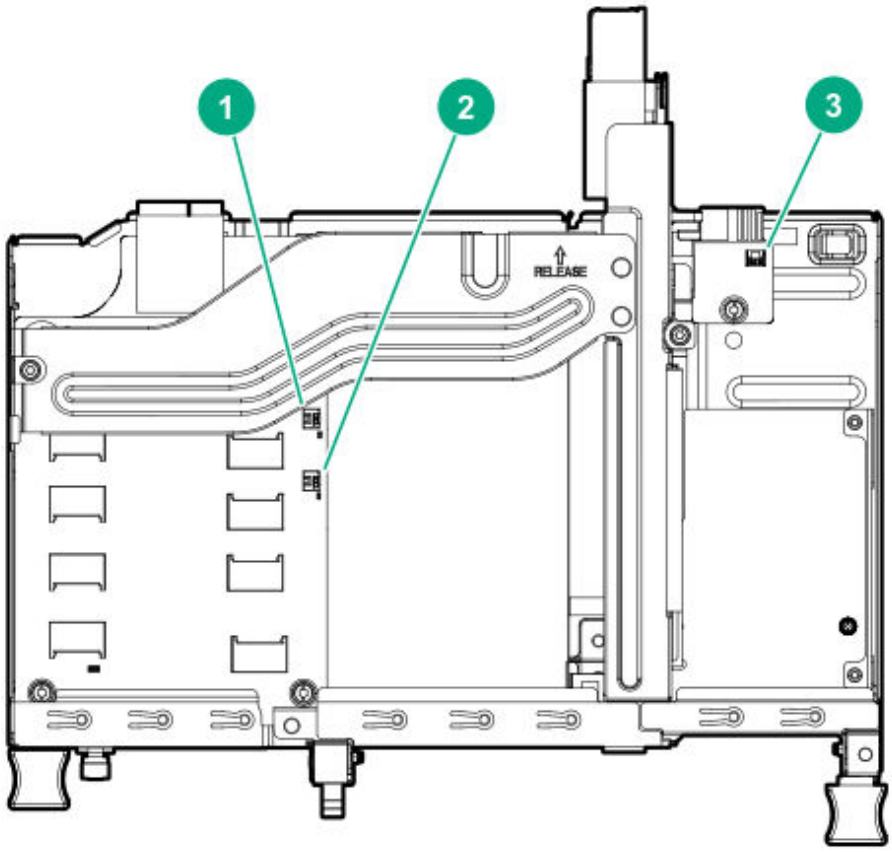

Item	Description
1	PCIe slot 1 controller backup power connector
2	PCIe slot 2 controller backup power connector
3	PCIe slot 3 controller backup power connector

HPE NS204i-p NVMe OS Boot Device components

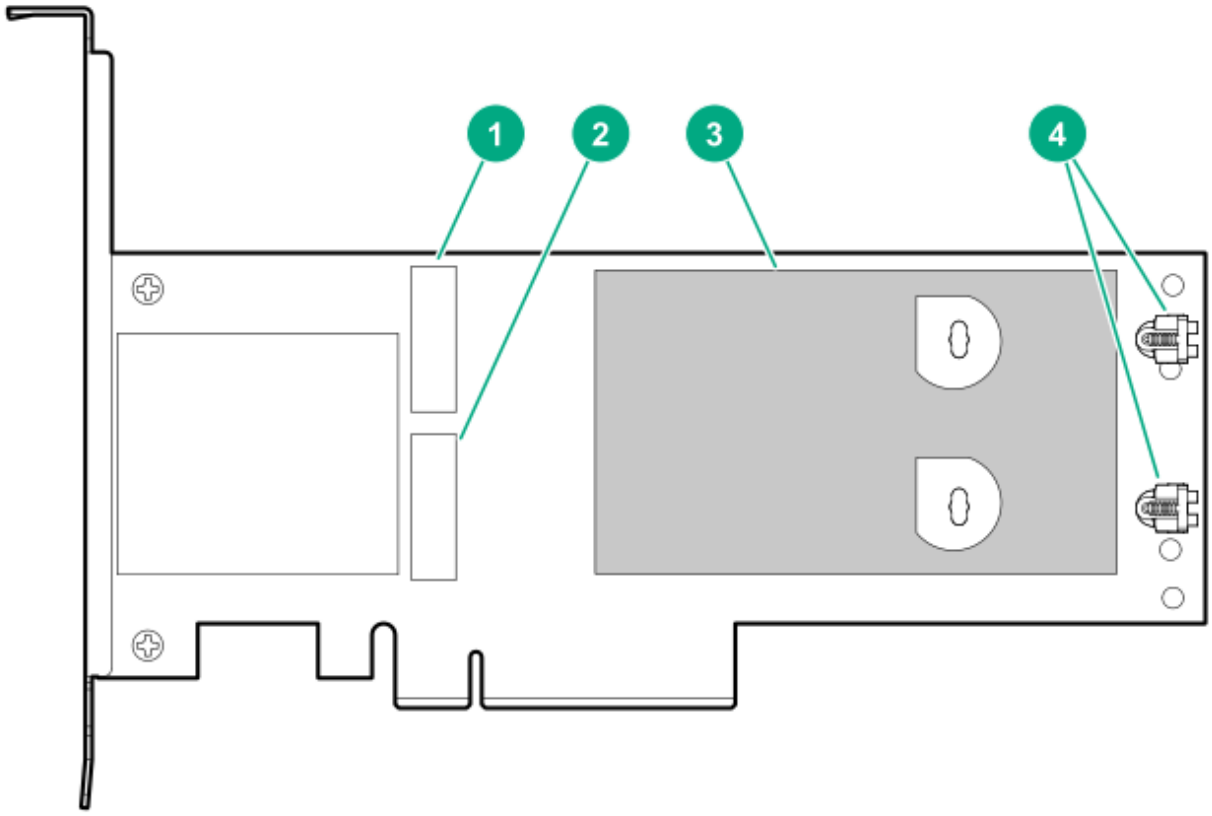

Item	Description
1	Drive bay 1
2	Drive bay 2
3	Thermal interface pad with removable liner
4	M.2 drive retaining latches

HPE NS204i-p NVMe OS Boot Device LED definitions

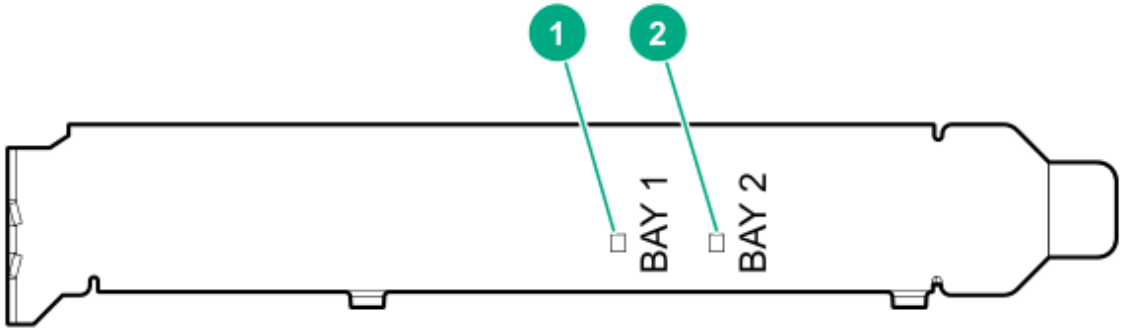

Item	Description	Fault LED status
1	Bay 1 LED	Off: Normal
2	Bay 2 LED	Flashing 1Hz: Drive predictive failure Amber: Drive failure

LFF drive bay numbering

The arrow indicates the front of the chassis.

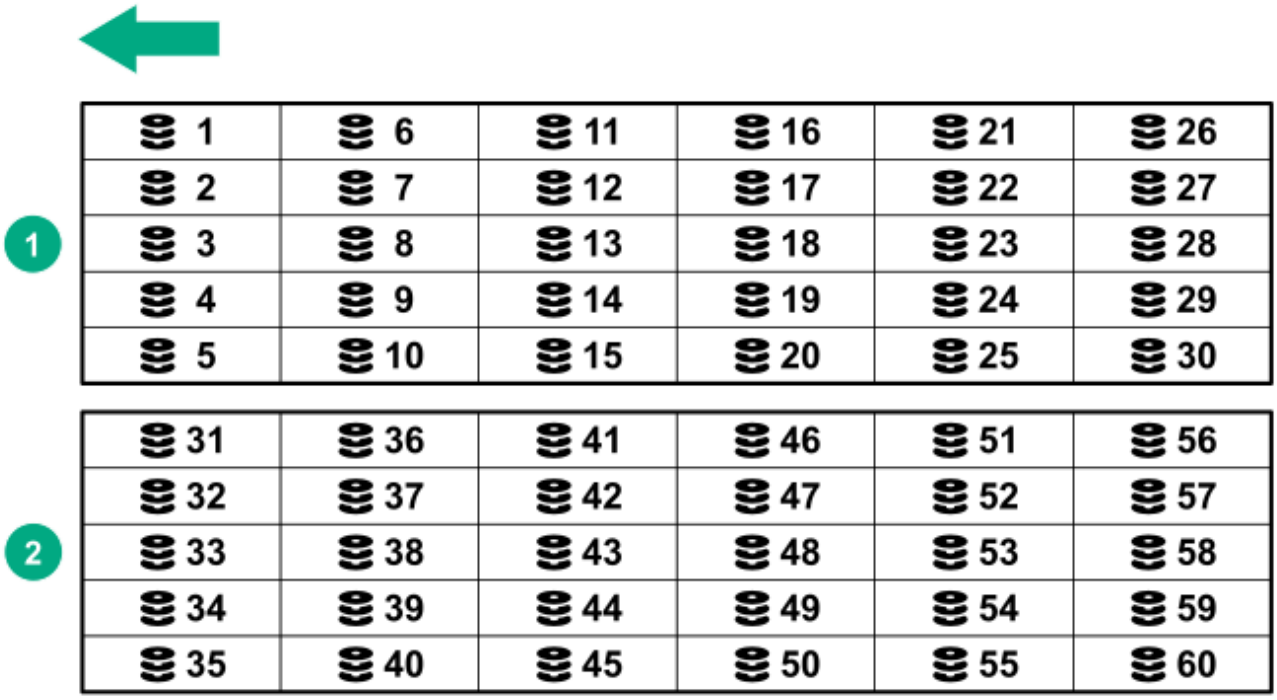

Item	Description
1	Drive drawer 1
2	Drive drawer 2

Low-profile LFF drive LED definitions

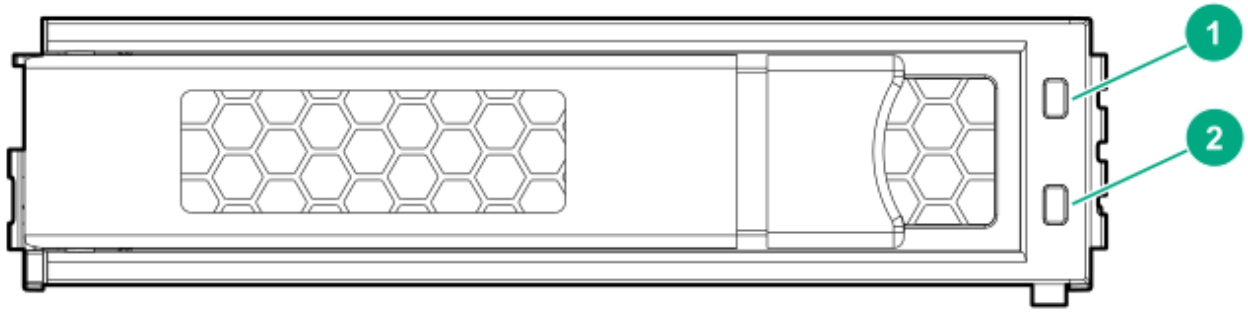

Item	LED	Status	Definition
1	Fault\Locate	Solid amber	The drive has failed.
		Solid blue	The drive is operating normally and being identified by a management application.
		Flashing amber/blue (1 flash per second)	The drive has failed, or a predictive failure alert has been received for this drive; it also has been identified by a management application.
		Flashing amber (1 flash per second)	A predictive failure alert has been received for this drive. Replace the drive as soon as possible.
2	Online\Activity	Solid green	The drive is online and has no activity.
		Flashing green (4 flashes per second)	The drive is operating normally and has activity.
		Flashing green (1 flash per second)	The drive is doing one of the following: • Rebuilding • Performing a RAID migration • Performing a strip size migration • Performing a capacity expansion • Performing a logical drive extension • Erasing

Item	LED	Status	Definition
			• Spare part activation
		Off	The drive is not configured by a RAID controller or a spare drive.

DSC-25 2-port SFP28 card ports and LEDs

Ports

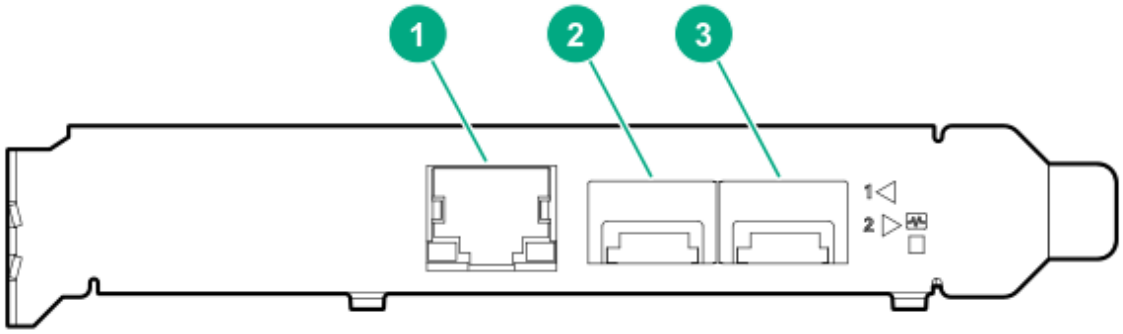

Table 1: Ports

Item	Port	Description
1	Management port	1GbE RJ45
2	Network interface port	10/25G SFP+ based
3	Network interface port	10/25G SFP+ based

LEDs

The HPE for Pensando DSP DSC-25 2p SFP28 card is a dual-port, single-slot, half-height, half-length (HHHL) SFP28 network adapter. It has LEDs for Link (L) and Activity (A) for each port. A half-height bracket is shown in the following illustration with SFP28 ports and LEDs.

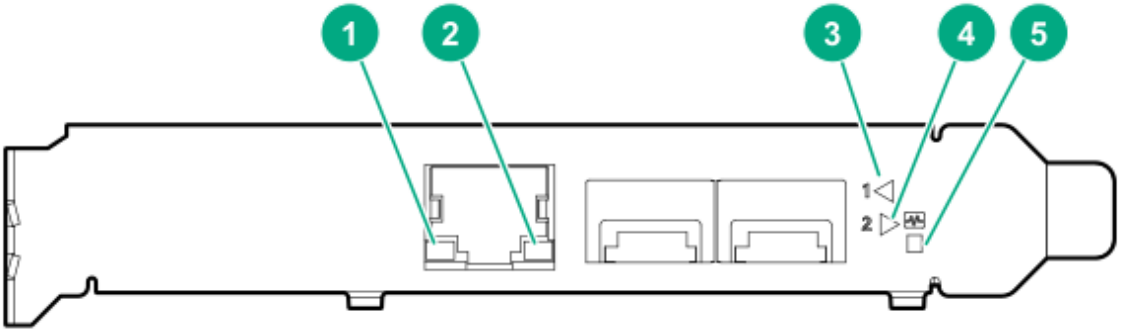

Table 2: LED indicators

Item	LED	Status	Description
1	Management Port Activity LED	Off	No activity
		Flashing	Passing traffic; flashing frequency indicates traffic intensity
2	Management Port Link LED	Off	A link has not been established
		Solid green	Valid Ethernet link
3	SFP Port 1 Link/ Activity LED	Off	A link has not been established
		Solid green	Valid Ethernet link
		Flashing green	Passing traffic; flashing frequency indicates traffic intensity
		Solid amber	Link fault
4	SFP Port 2 Link/ Activity LED	Off	A link has not been established
		Solid green	Valid Ethernet link
		Flashing green	Passing traffic; flashing frequency indicates traffic intensity

Item	LED	Status	Description
		Solid amber	Link fault
5	System status LED	Off	System is not powered
		Solid amber	Power is up, software has not booted yet
		Solid green	System is up and fully operational

Installing the chassis

Setting up and installing the chassis

Procedure

1. Set up and install the rack. For more information, see the documentation that ships with the rack.
2. Disassemble the chassis (Disassembling the chassis).
3. Install the chassis into the rack (Installing the chassis into the rack).
4. Install the system components into the chassis (Installing the system components into the chassis).

Disassembling the chassis

Prerequisites

- Because a fully populated chassis can weigh up to 102.00 kg (225.00 lb), remove the pluggable modules and system components from the chassis to make moving and installing the chassis easier.
- If you are manually lifting the chassis into the rack, be sure to have at least four people and use the four lift handles, when lifting the chassis. The chassis lift handles are used to help move the chassis up and on to the rails. Remove the handles when pushing the chassis into the rack. If the required number of people, or the chassis handles are not available, use a mechanical lift.

Procedure

1. With the chassis still on the pallet, remove all components from the rear and front of the chassis:

   - Power supplies

Figure 1: Removing a power supply

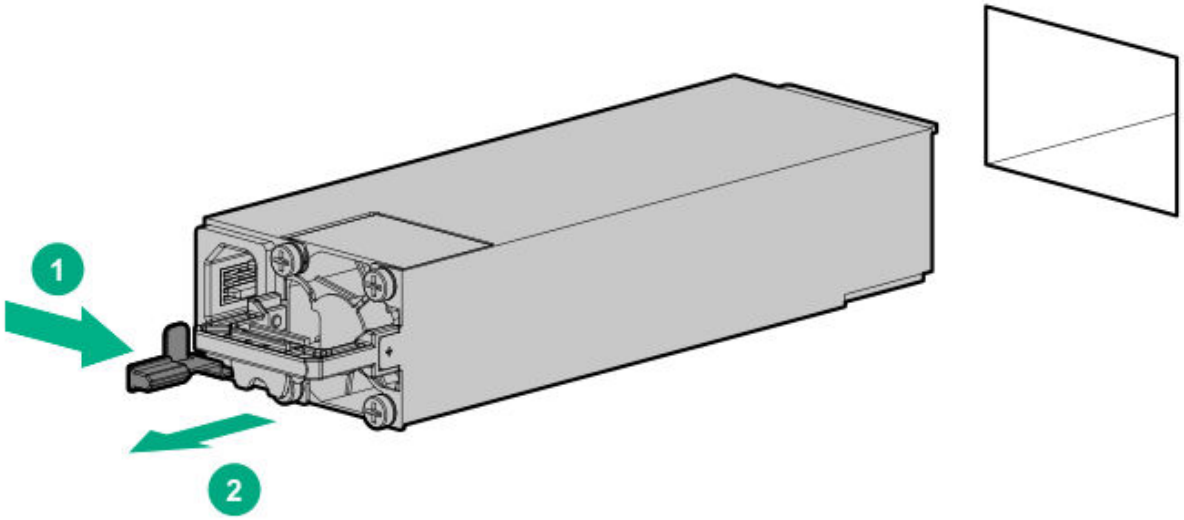

   - Management module

Figure 2: Removing the management module

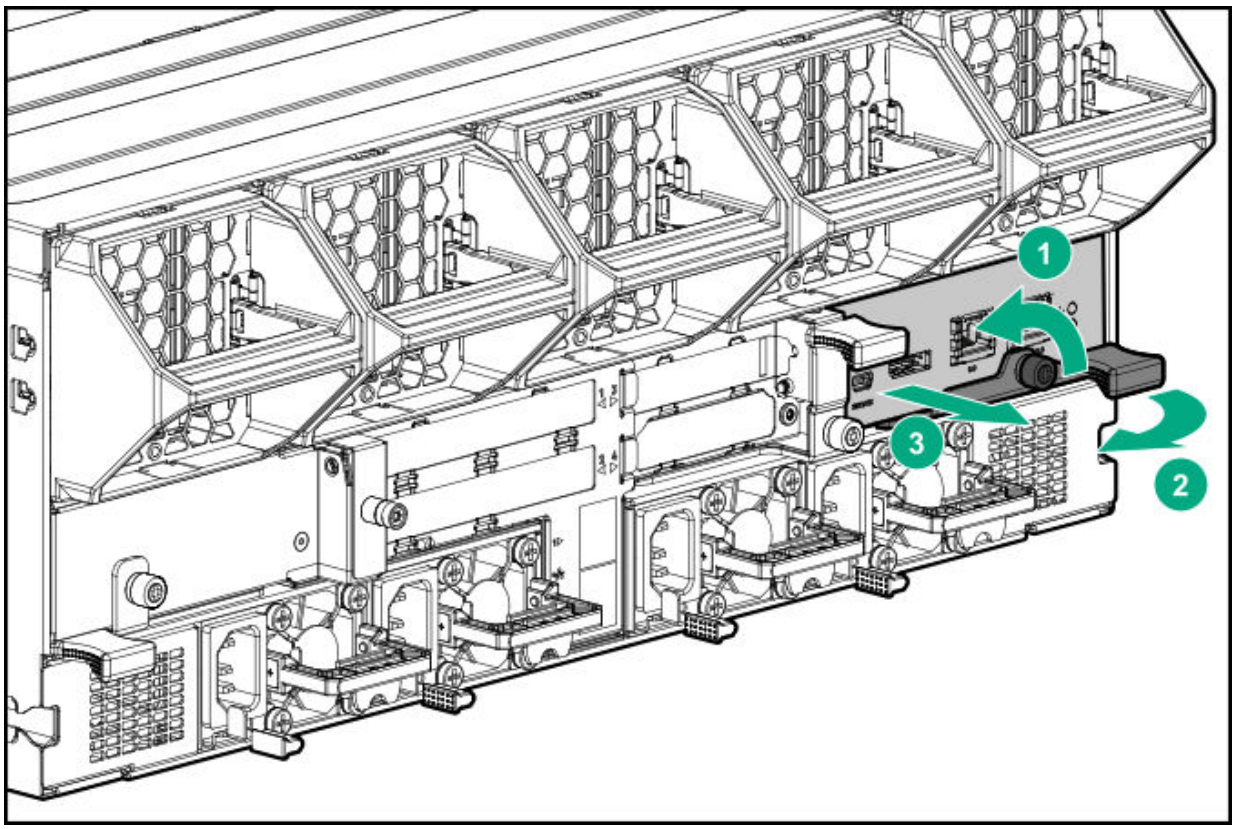

- HPE Smart Storage Battery:
  - Disconnect the HPE Smart Storage Battery cable.

Figure 3: Disconnecting the HPE Smart Storage Battery cable

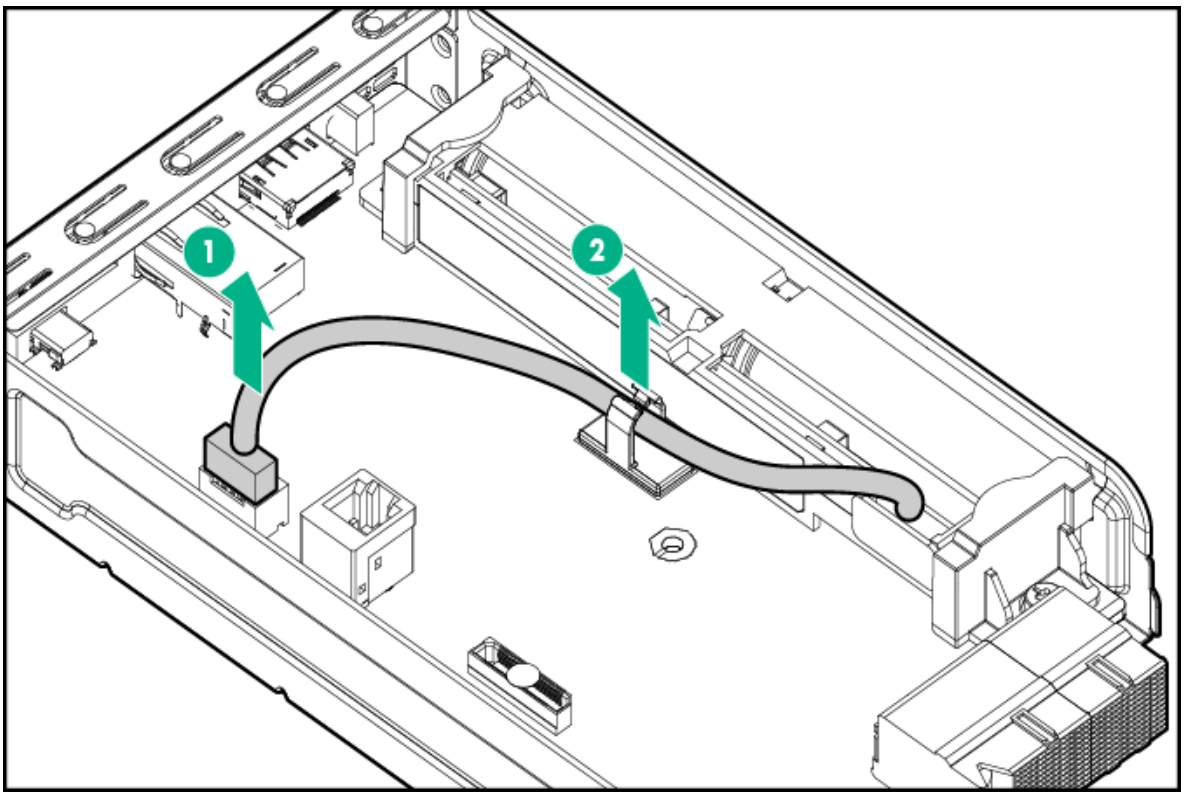

◦ Remove the HPE Smart Storage Battery.

Figure 4: Removing the HPE Smart Storage Battery

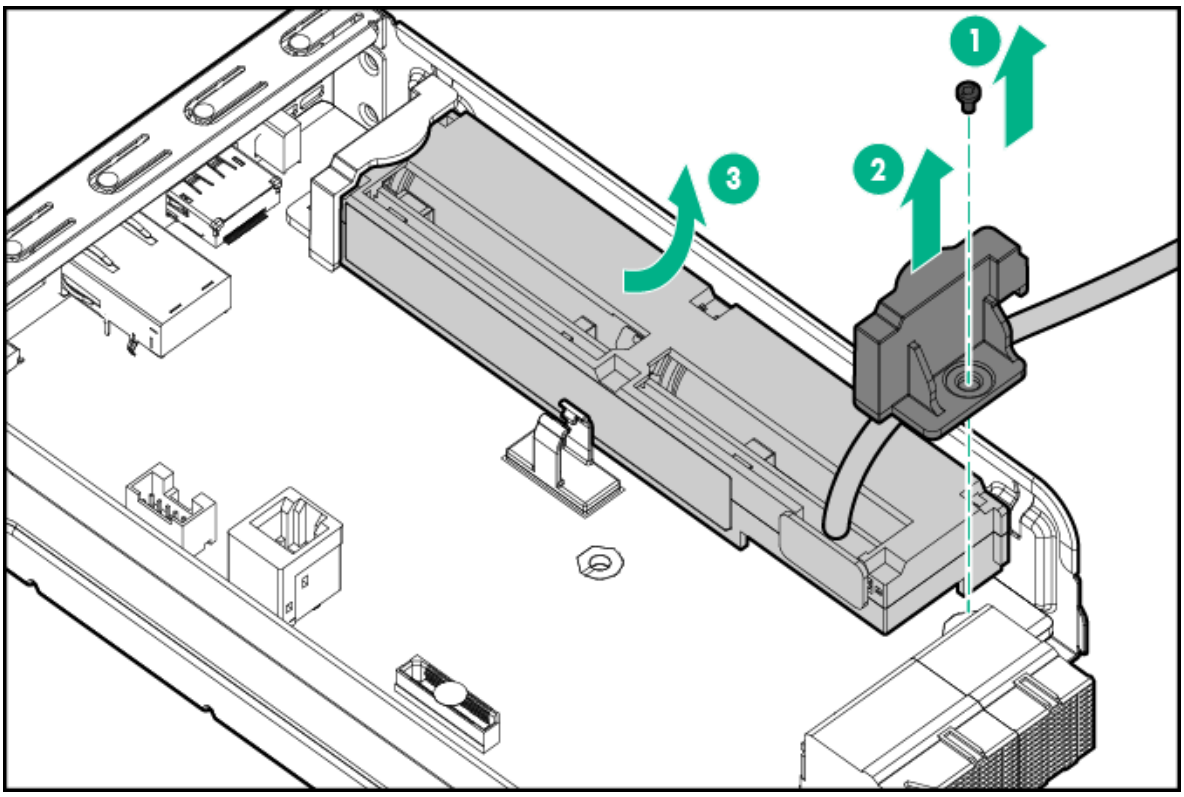

- I/O module

Figure 5: Removing the I/O module

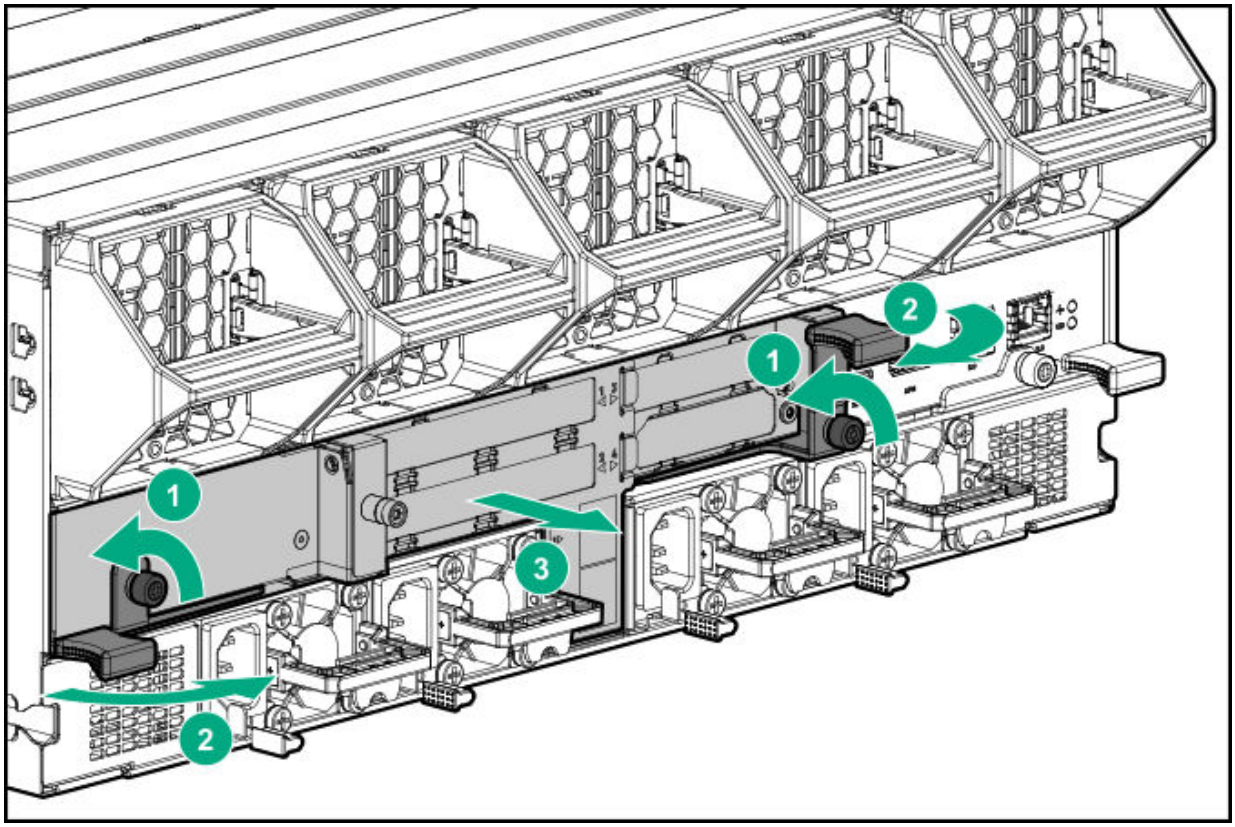

- System fans.

Figure 6: Removing a system fan

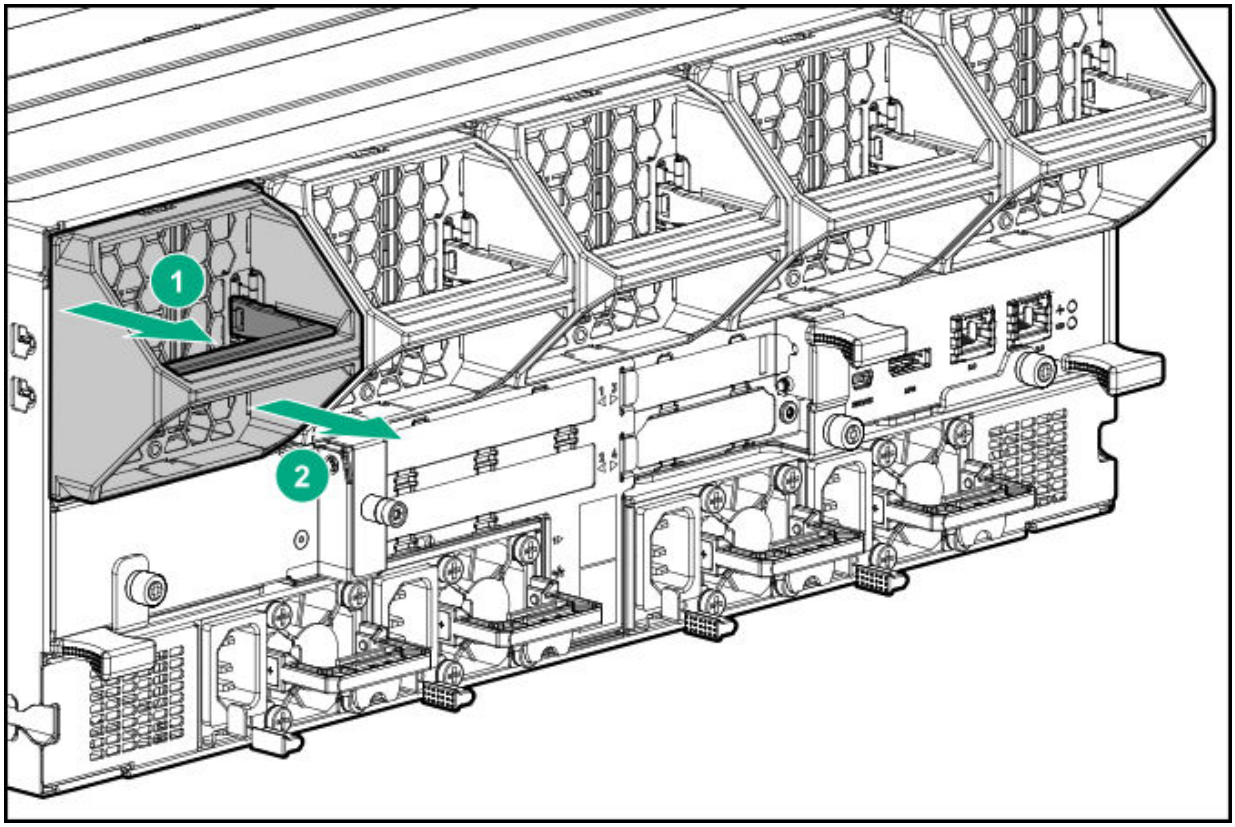

- Fan louver

Figure 7: Removing the fan louver

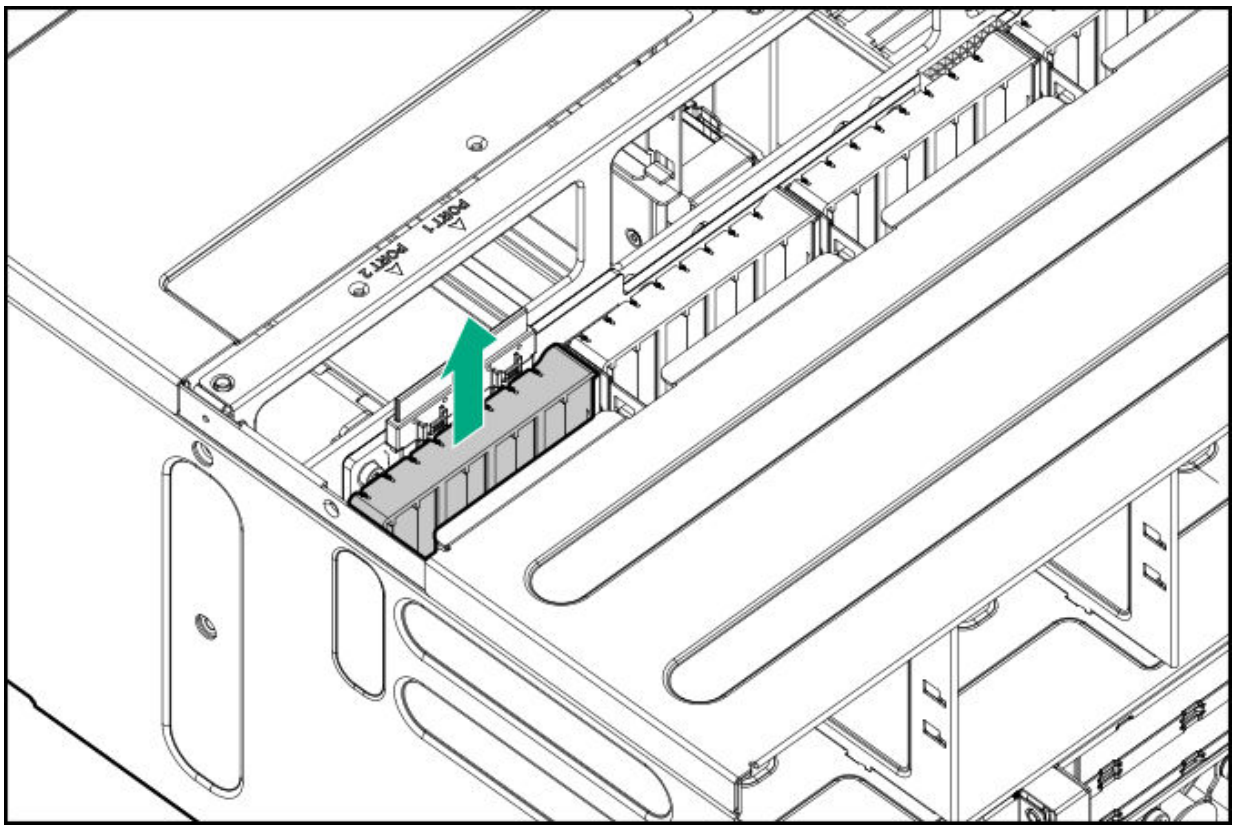

- Midplane assembly:
  a. Remove the midplane assembly cover:
     i. Remove the five screws on the top.
     ii. Remove the two screws on the sides.

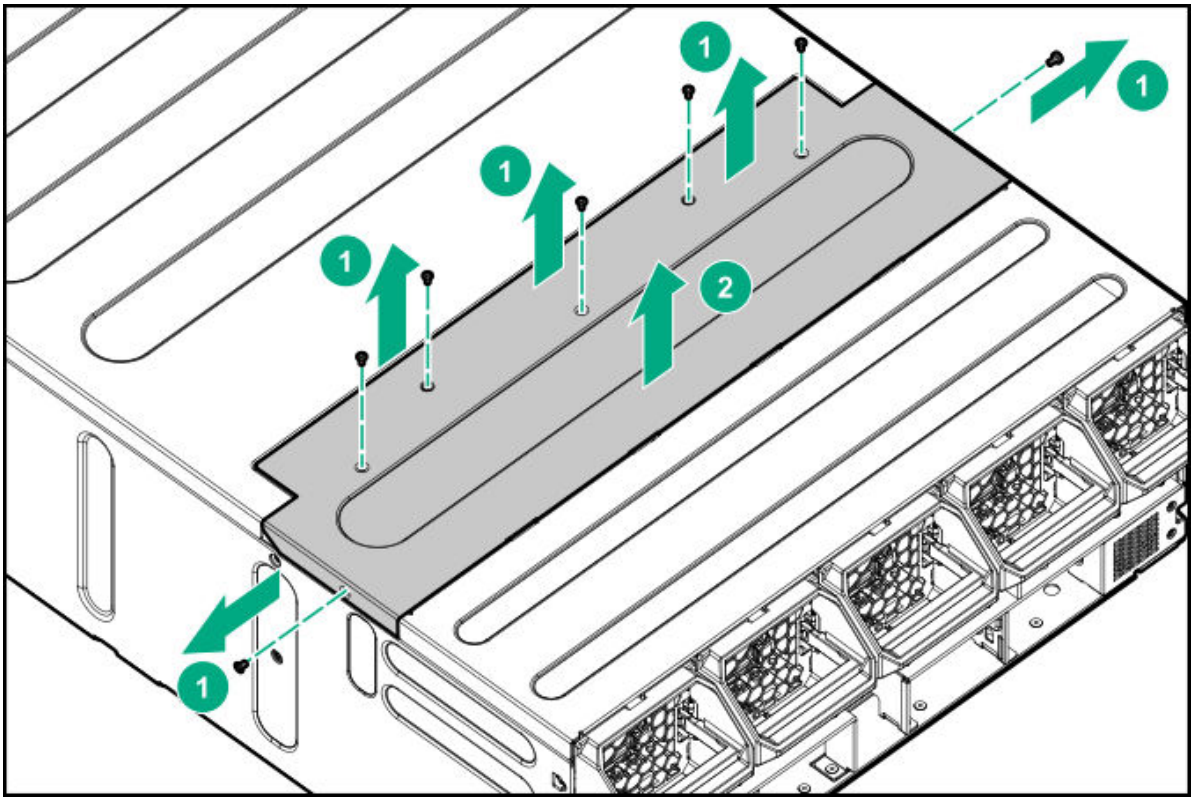

b. Disconnect the four drive data cables that connect to the midplane.

c. Disconnect the two fan cables that connect to the midplane.

d. Remove the midplane assembly:

   - Remove the two screws on the sides of the chassis.
   - Lift the assembly straight up.

Figure 8: Removing the midplane assembly

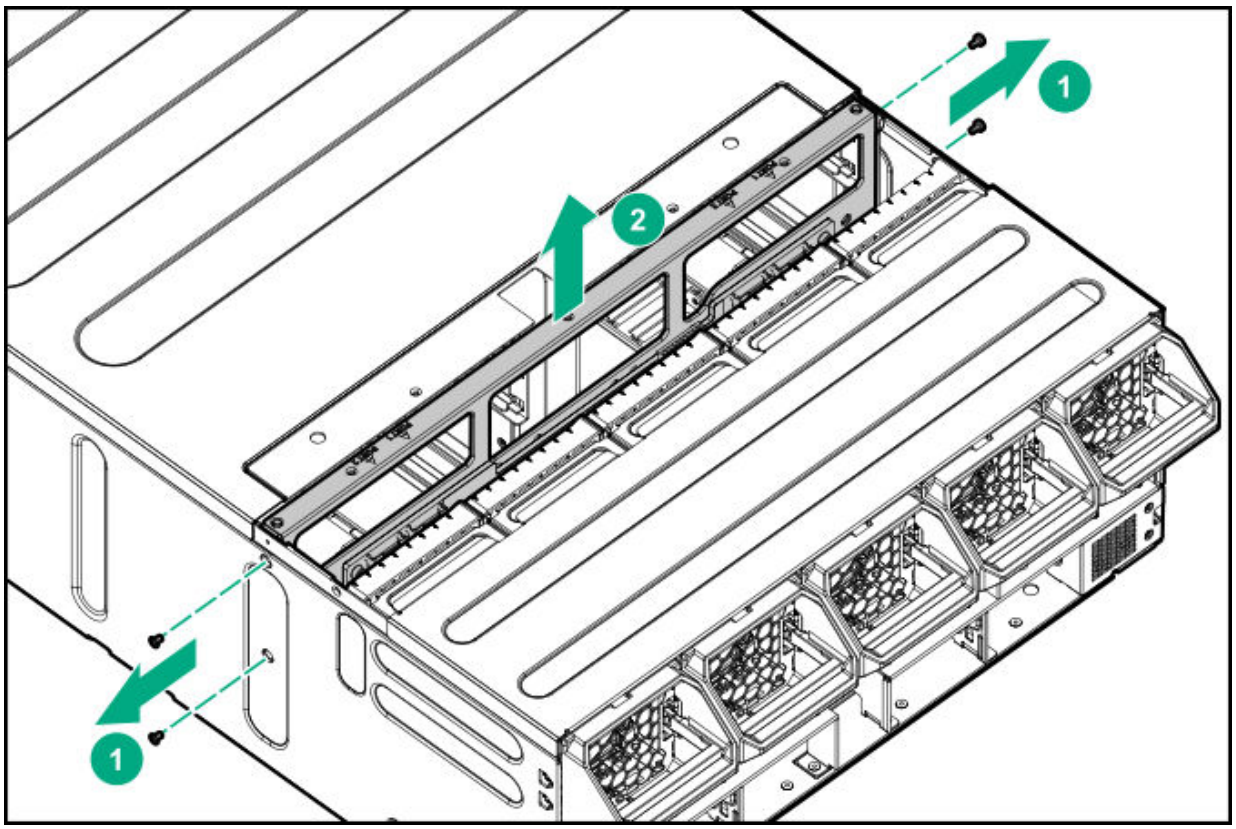

CAUTION:

To avoid damage to the server, always support the bottom of the server when removing it from the chassis.

- Server

Figure 9: Removing the server from the chassis

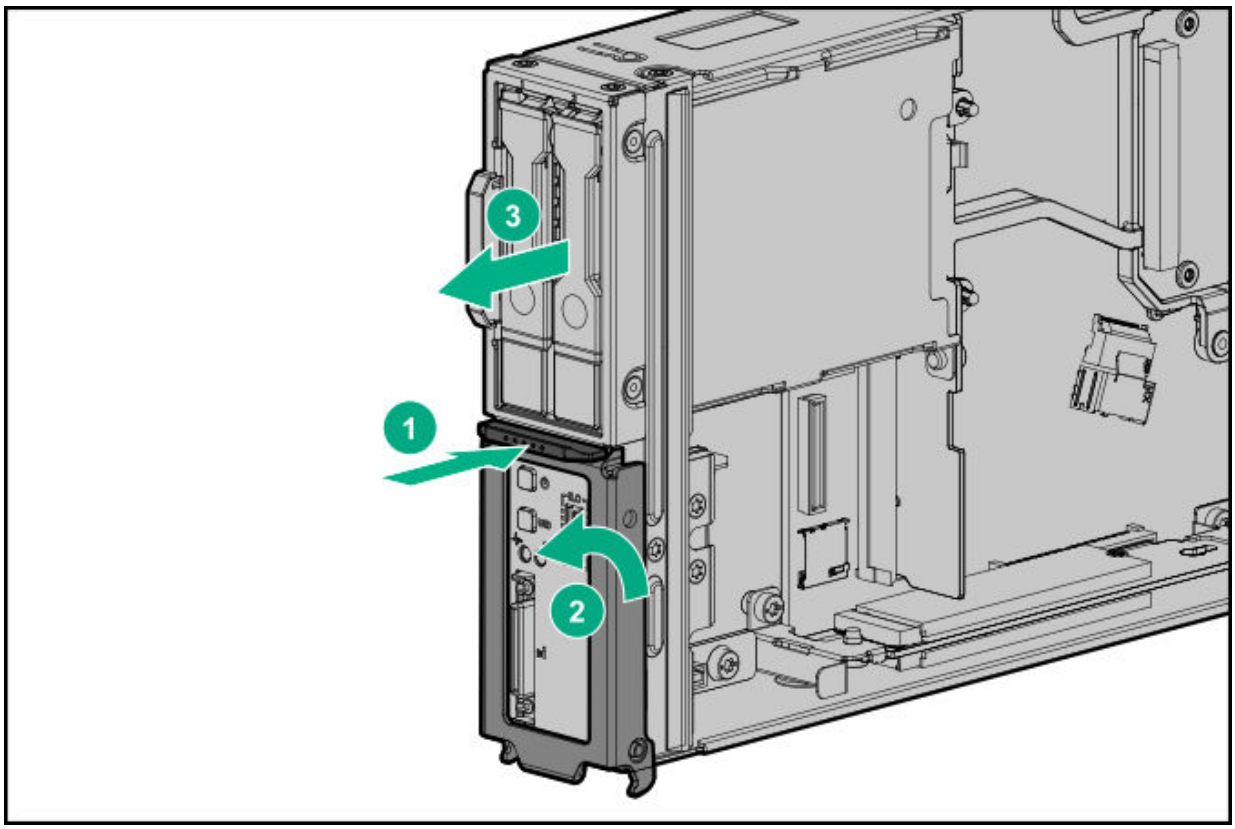

CAUTION:

To avoid damage to the device, do not use the removal handle to carry it.

2. Remove all LFF drives:

   a. Extend the drive drawer from the chassis.

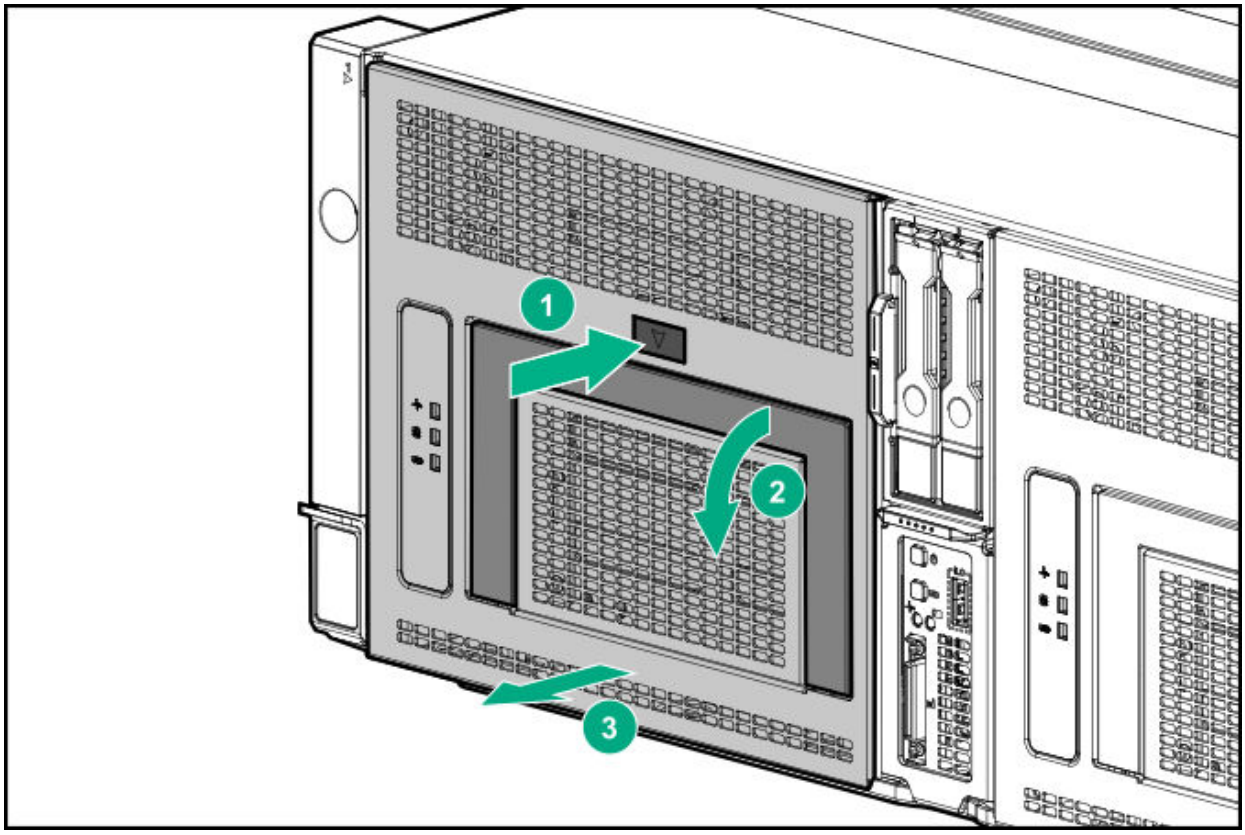

b. Remove the drives.

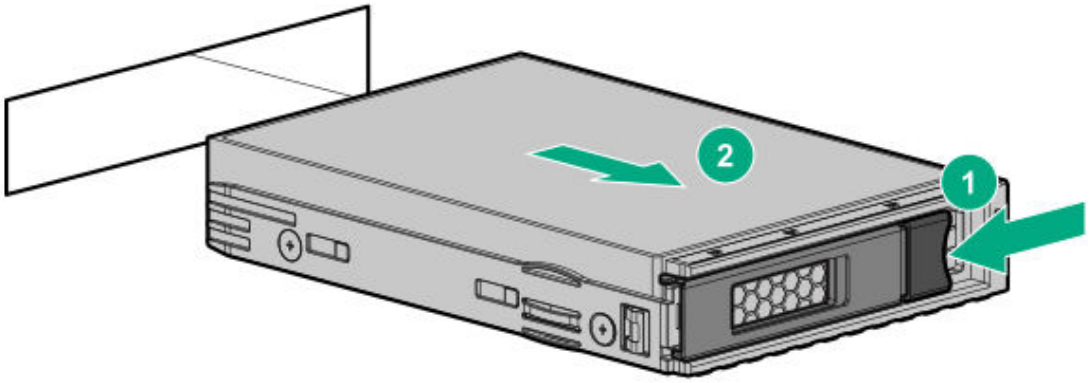

Installing the chassis into the rack

WARNING: Always have at least four people to lift the chassis into the rack. If the chassis is being loaded into the rack above chest level, an additional person must assist with aligning the chassis with the rails while the other people support the weight of the chassis.

WARNING: To avoid risk of personal injury or damage to the equipment, do not stack anything on top of rail-mounted equipment or use it as a work surface when extended from the rack.

CAUTION: Be sure to keep the product parallel to the floor when installing the chassis. Tilting the product up or down could result in damage to the rails.

WARNING: The chassis is very heavy. To reduce the risk of personal injury or damage to the equipment:

- Observe local occupational health and safety requirements and guidelines for manual material handling.
- Remove all installed components from the chassis before installing or moving the chassis.
- Use caution and get help to lift and stabilize the chassis during installation or removal, especially when the chassis is not fastened to the rack.

CAUTION: Always plan the rack installation so that the heaviest item is on the bottom of the rack. Install the heaviest item first, and continue to populate the rack from the bottom to the top.

CAUTION: Hewlett Packard Enterprise has not tested or validated the chassis with any third-party racks. Before installing the chassis in a third-party rack, be sure to properly scope the limitations of the rack. Before proceeding with the installation, consider the following:

- You must fully understand the static and dynamic load carrying capacity of the rack and be sure that it can accommodate the weight of the chassis.
- Be sure sufficient clearance exists for cabling, installation and removal of the chassis, and actuation of the rack doors.

The chassis requires rails for installation in a rack. To install the rack rails, see the HPE Apollo 4500 4U Rail Installation Instructions that ship with the rack hardware kit.

You can install up to nine chassis in a 36U, 1200mm deep rack. If you are installing more than one chassis, install the first chassis in the bottom of the rack, and then install additional chassis by moving up the rack with each subsequent chassis. Plan the rack installation carefully because it is difficult to change the location of components after they are installed.

WARNING: To reduce the risk of personal injury or damage to the equipment, be sure that:

- The rack is bolted to the floor using the concrete anchor kit.
- The leveling feet extend to the floor.
- The full weight of the rack rests on the leveling feet.
- The racks are coupled together in multiple rack installations.
- Only one component is extended at a time. If more than one component is extended, a rack might become unstable.

WARNING: To reduce the risk of personal injury or equipment damage, be sure that the rack is adequately stabilized before installing the chassis.

If you are manually lifting the chassis into the rack, be sure to use the lift handles when lifting the chassis. The chassis lift handles are used to help move the chassis up and on to the rails. Remove the handles when pushing the chassis into the rack.

Procedure

1. Align and install the right and left rails into the rack.

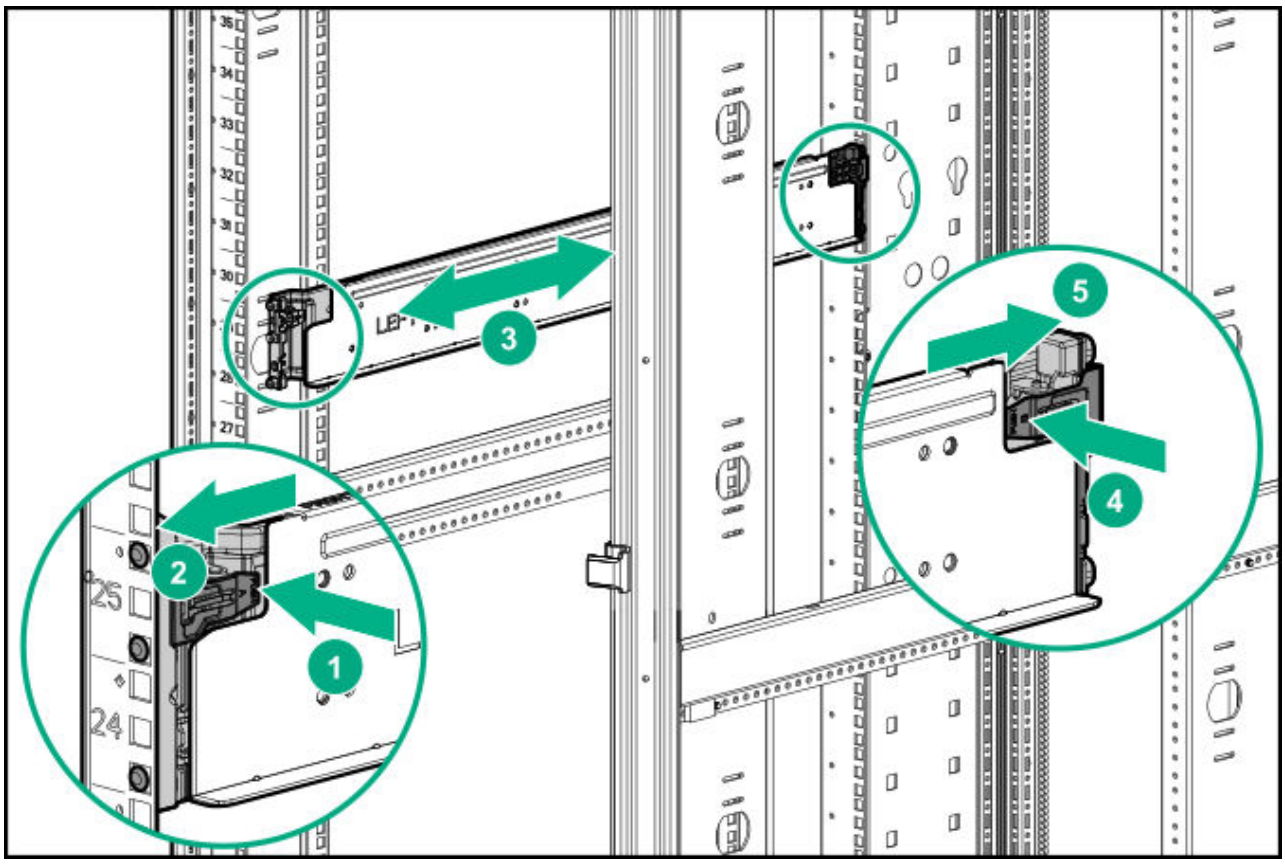

2. Align and install the support brackets on the rear of the rack.

   The R and L on the brackets indicate the location when standing at the rear of the rack.

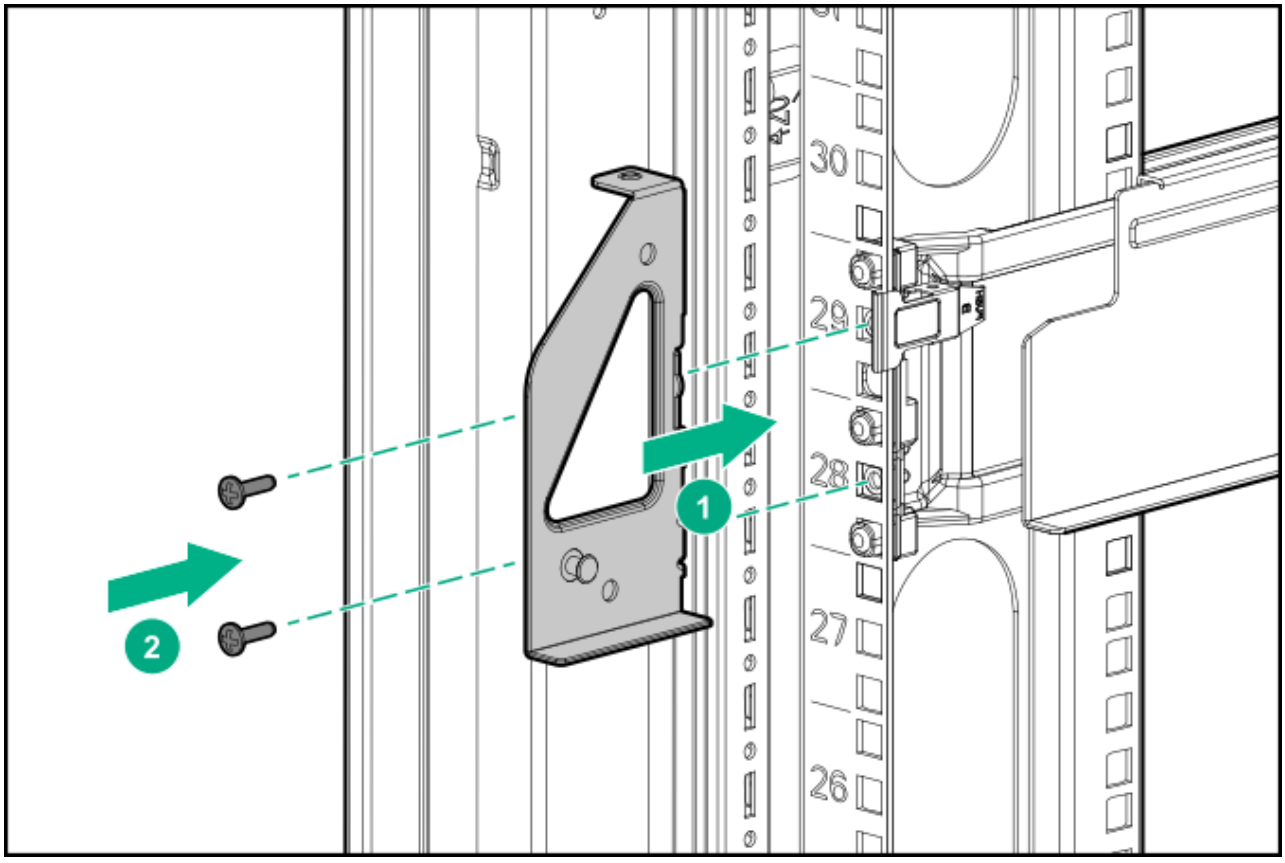

3. Install a cage nut into the rack on each side in the top hole at 3U above the bottom of the rail.

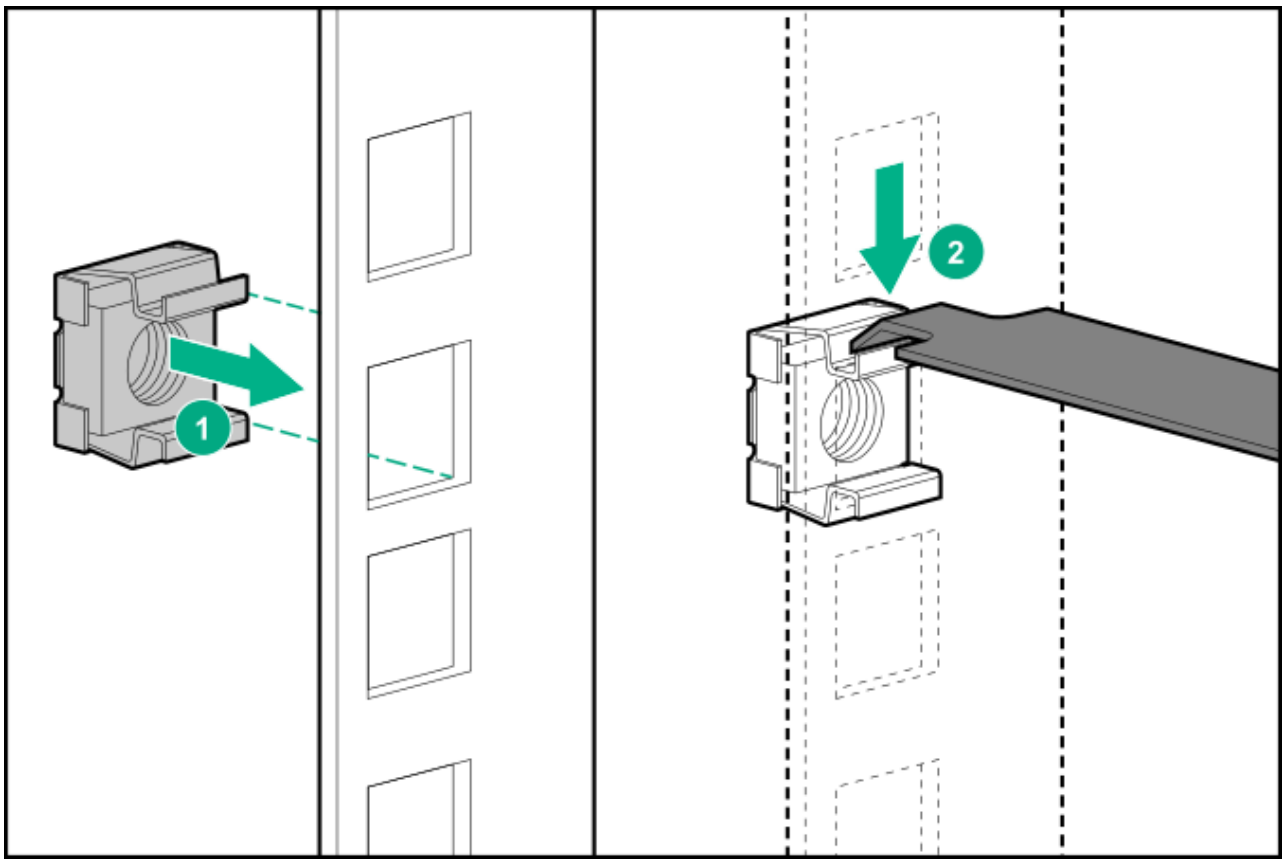

4. If you are installing the chassis manually, install the chassis lift handles:
   a. Align the chassis lift handles with the tick marks on the side of the chassis.

      Tick marks are provided on the side of the chassis to assist with aligning the handles for installation.

   b. Install both chassis lift handles on either side of the chassis.

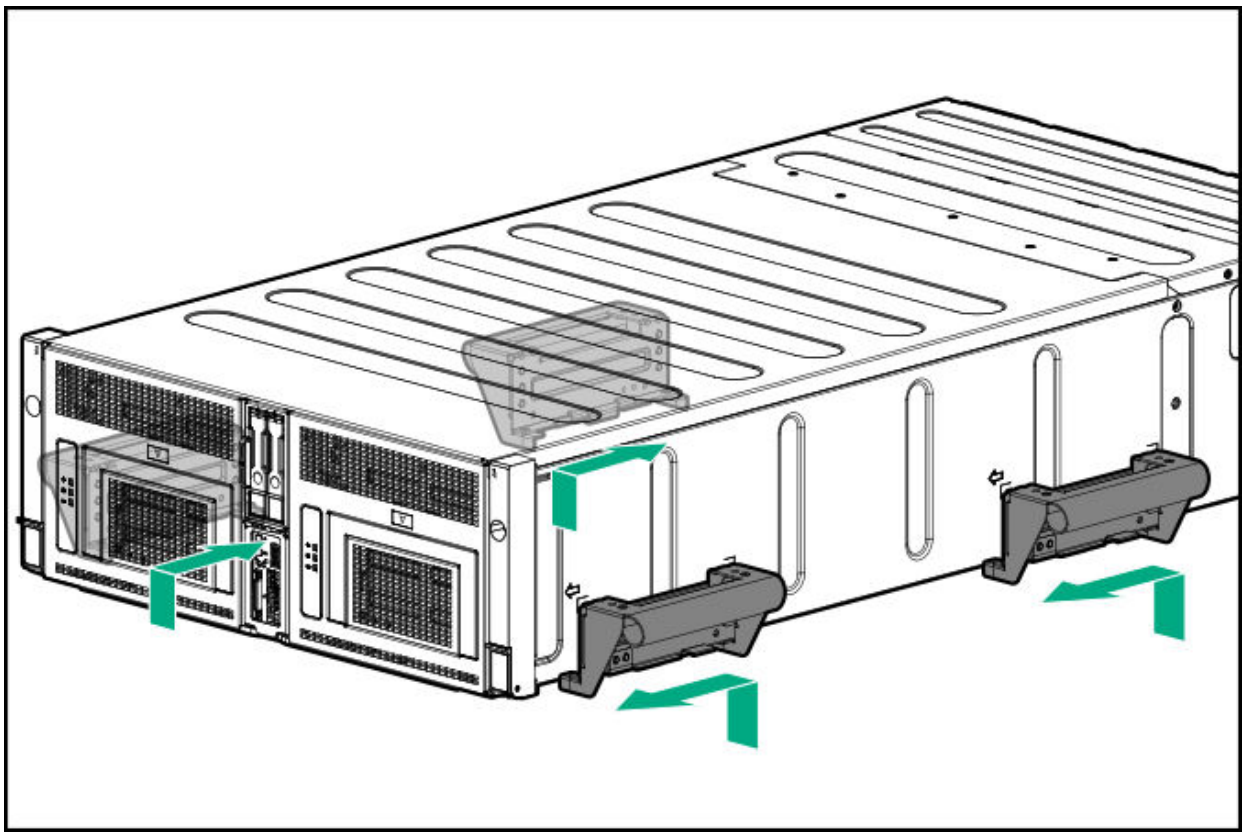

5. Remove the chassis lift handles when sliding the chassis onto the rails:

   a. Remove the chassis lift handles from the chassis.

      Do not remove the chassis handles until the weight of the chassis is resting on the rails. Retain the chassis handles for future use.

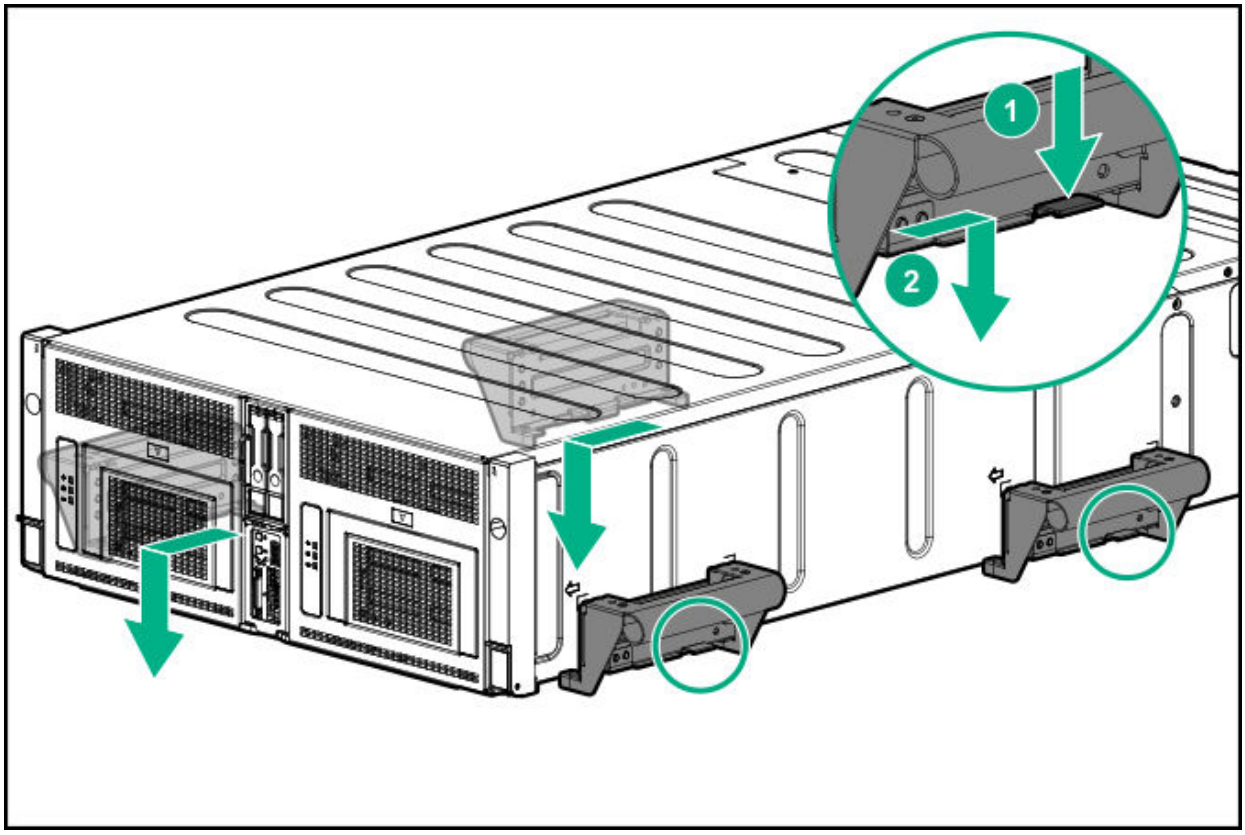

6. Align and install the chassis into the rack.

   Slide the chassis into the rack until the ears are flush against the rack posts and secure the chassis to the rack.

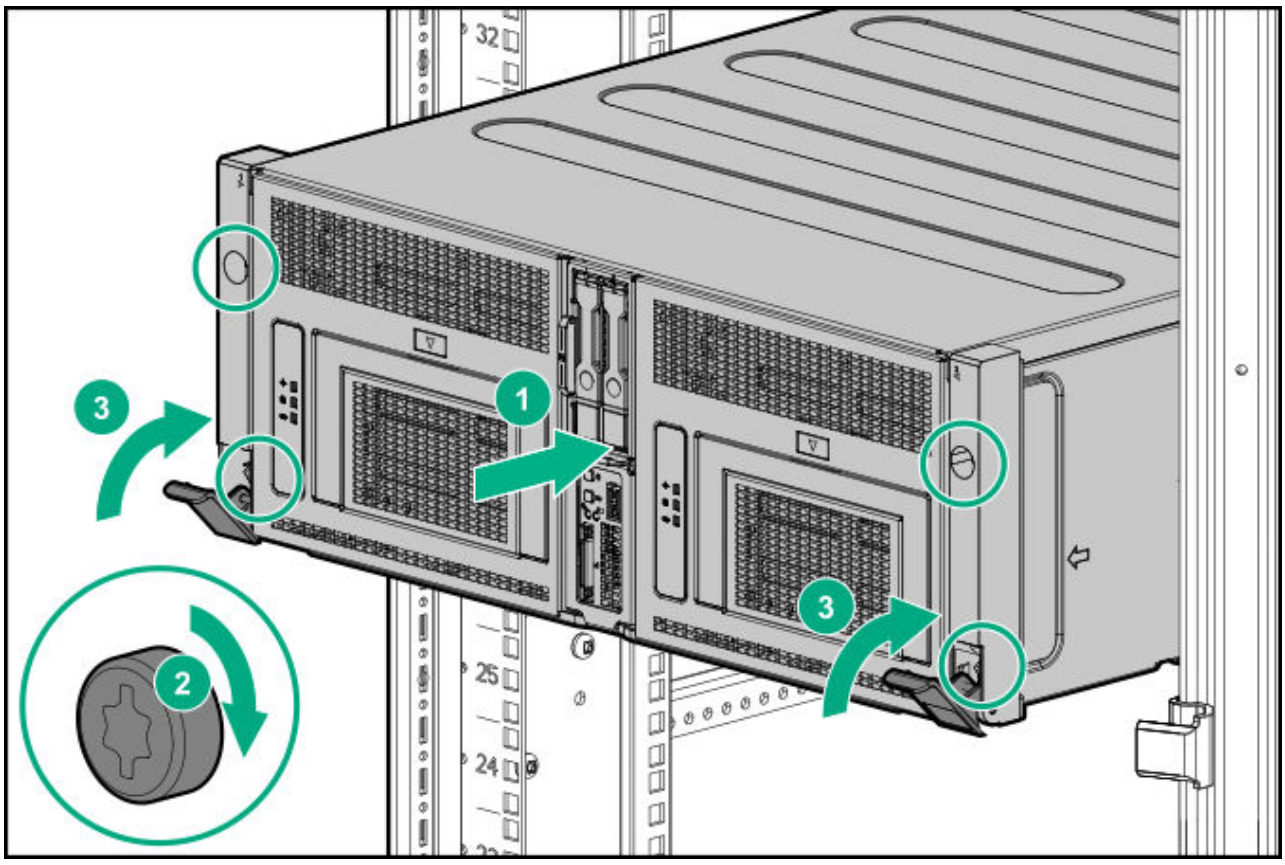

Installing the system components into the chassis

Once the chassis is installed in the rack, begin installing the components in the chassis.

Installing a server

CAUTION:

To prevent improper cooling and thermal damage, do not operate the server or the enclosure unless all drive and device bays are populated with either a component or a blank.

Procedure

1. Prepare the server for installation.

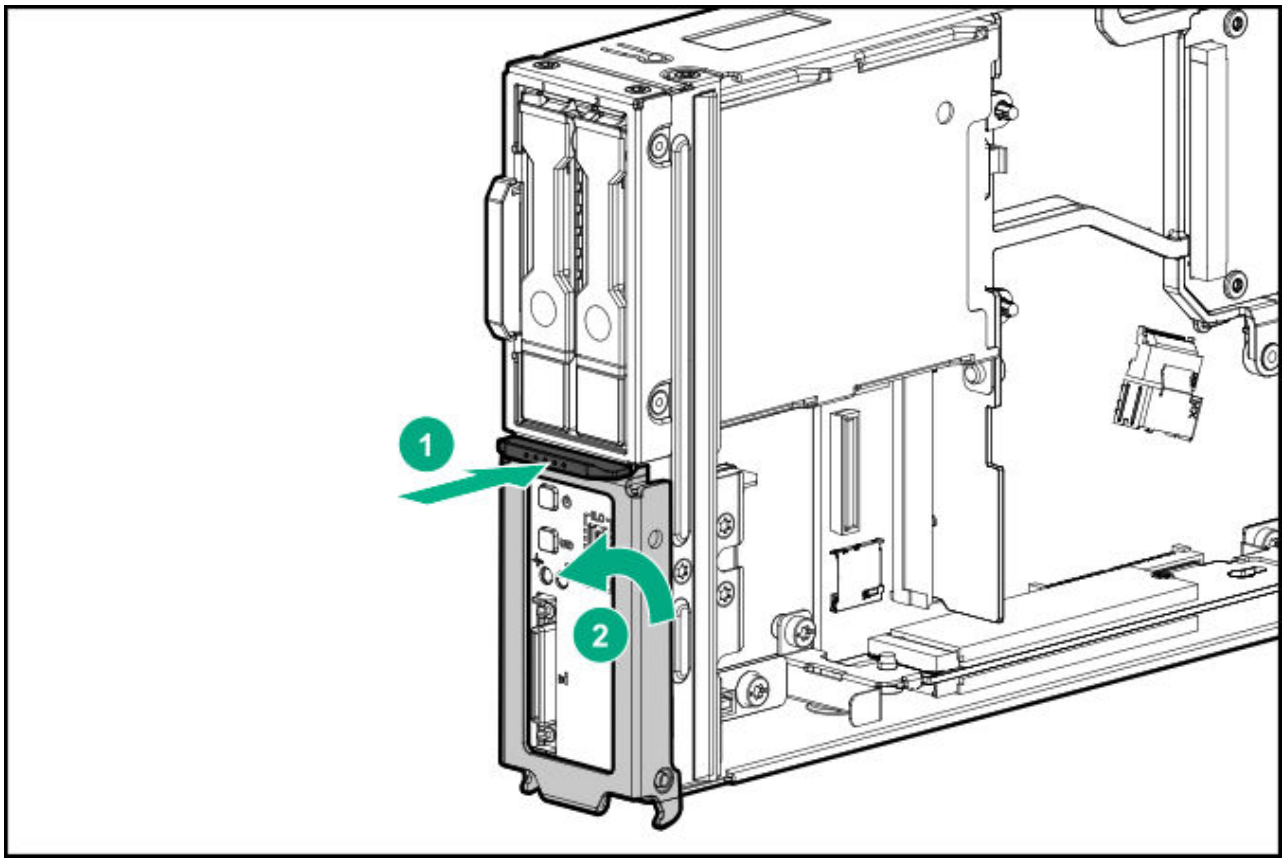

2. Install the server. When seated properly, the server will be flush with the front of the chassis and the release lever will close completely without resistance.

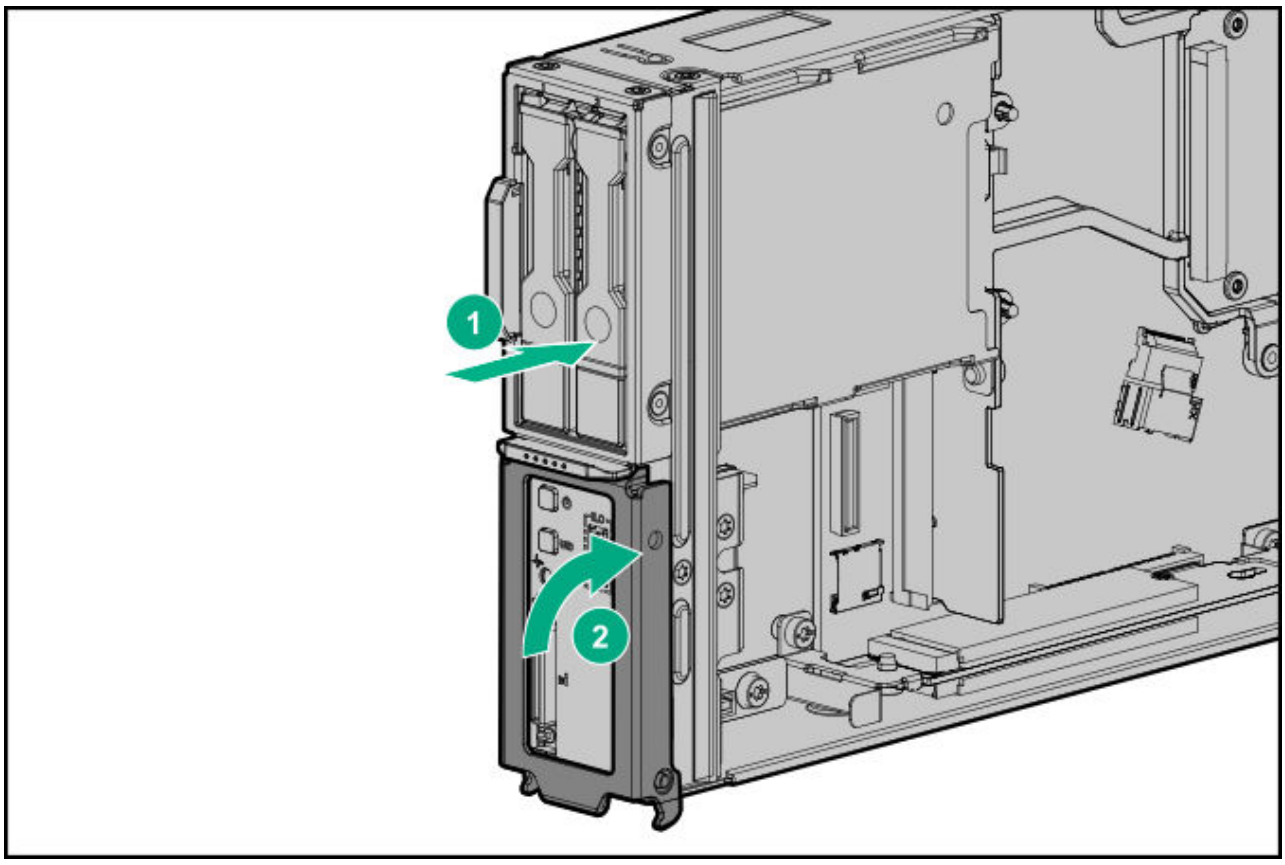

Installing a hot-plug drive

WARNING: To reduce the risk of injury from electric shock, do not install more than one drive carrier at a time.

Procedure

1. Remove the drive blank.
2. Prepare the low-profile LFF hot-plug drive for installation.
3. Install the LFF hot-plug drive in the chassis.

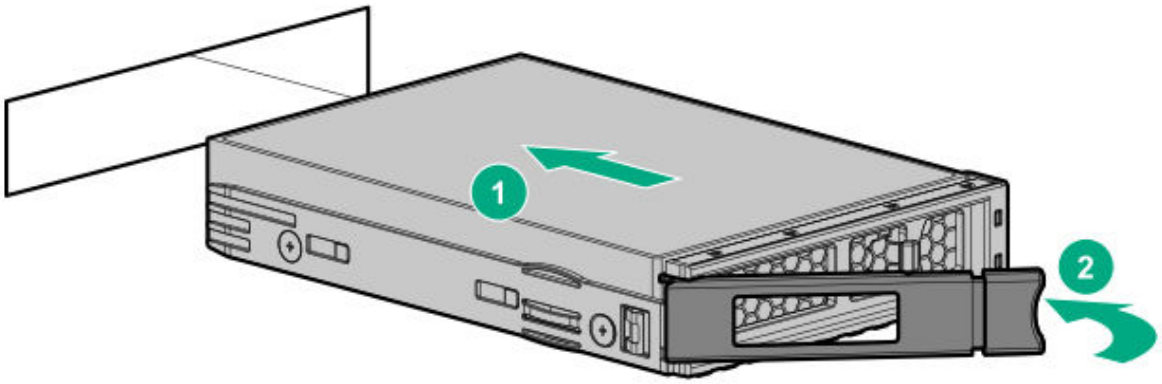

4. Determine the status of the drives using the drive LEDs on the Drive Drawer LEDs.

To configure arrays, see the HPE Smart Storage Administrator User Guide on the Hewlett Packard Enterprise website (**http://www.hpe.com/info/smartstorage/docs**).

Installing a flex slot power supply

WARNING: To reduce the risk of electric shock or damage to the equipment:

- Do not disable the power cord grounding plug. The grounding plug is an important safety feature.
- Plug the power cord into a grounded (earthed) electrical outlet that is easily accessible at all times.
- Unplug the power cord from the power supply to disconnect power to the equipment.
- Do not route the power cord where it can be walked on or pinched by items placed against it. Pay particular attention to the plug, electrical outlet, and the point where the cord extends from the server.

Procedure

Install the component as indicated.

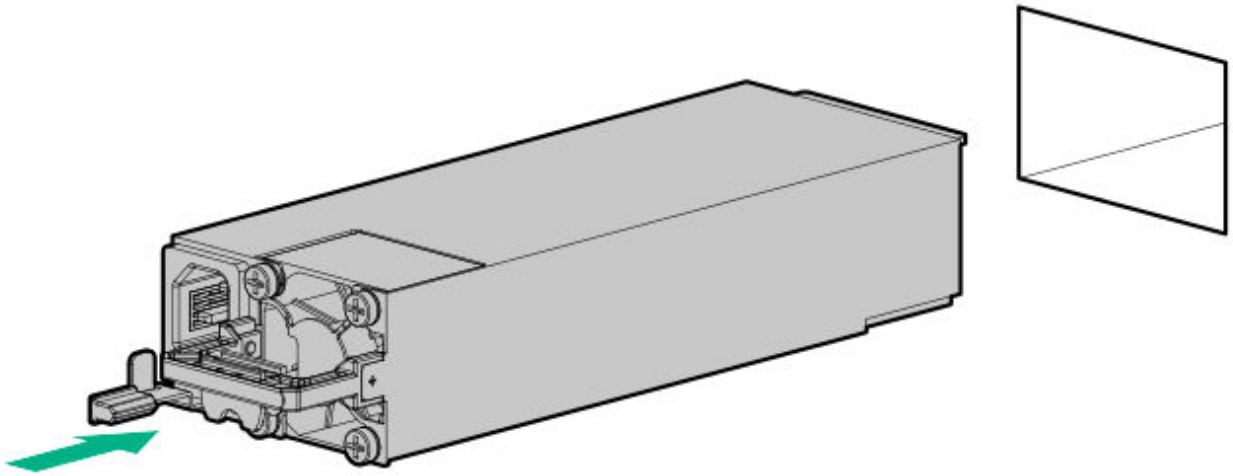

Installing the system fan

Procedure

Install the component as indicated.

> **IMPORTANT:** Use the tabs to insert the system fan into the chassis. Do not push in on the system fan grill to install it.

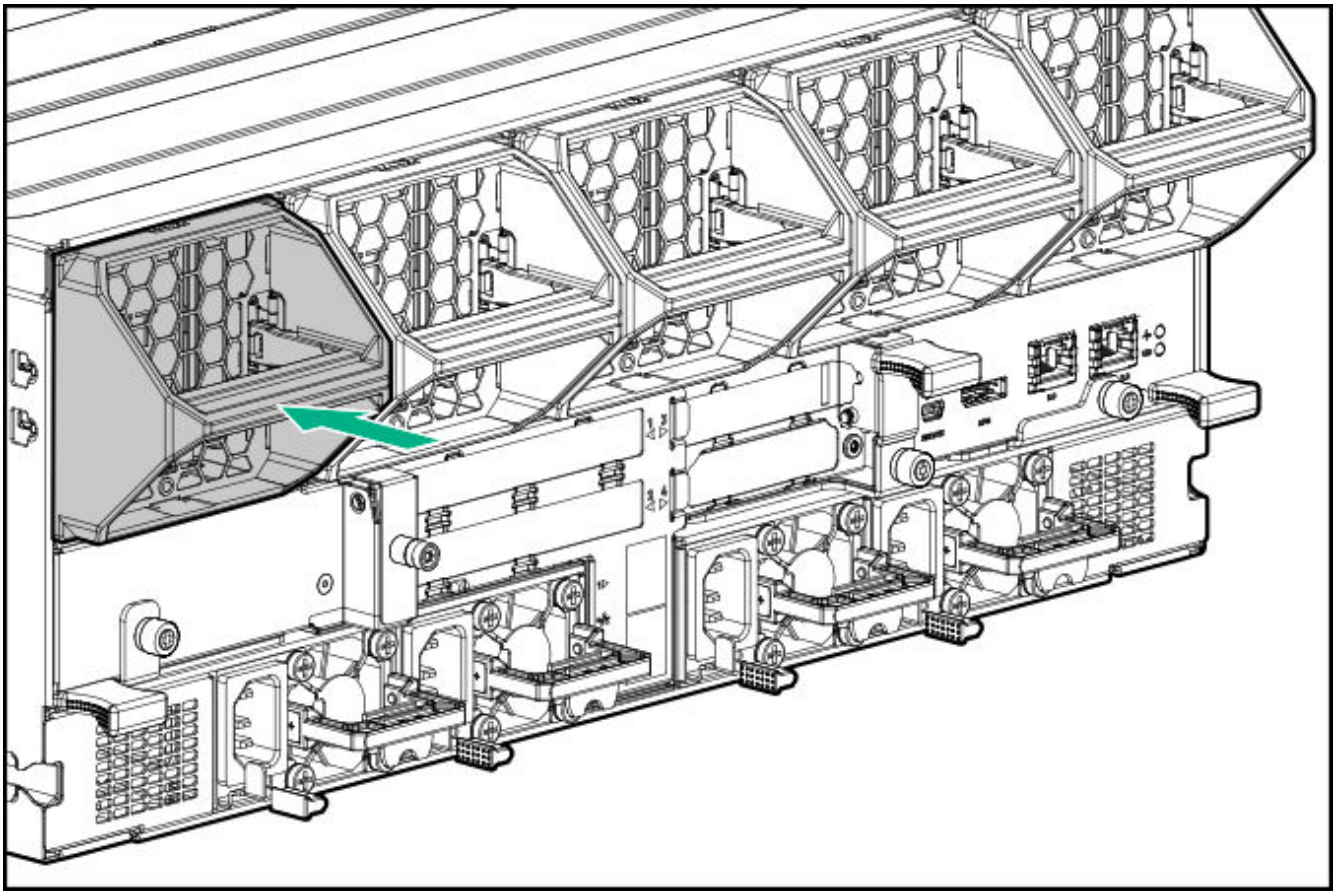

HPE Smart Storage Battery

The HPE Smart Storage Battery supports the following devices:

- HPE Smart Array SR controllers
- HPE Smart Array MR controllers
- NVDIMMs

> **IMPORTANT:**
>
> To support NVDIMMs, the HPE Smart Storage Battery must be installed.

A single 96W battery can support up to 24 devices.

After the battery is installed, it might take up to two hours to charge. Controller features requiring backup power are not re-enabled until the battery is capable of supporting the backup power.

This server supports the 12W HPE Smart Storage Battery with the 230mm cable.

This server supports the 96W HPE Smart Storage Battery with the 145mm cable.

This server supports the 96W HPE Smart Storage Battery with the 260mm cable.

Installing the HPE Smart Storage Battery

NOTE: System ROM and firmware messages might display "energy pack" in place of "Smart Storage Battery." Energy pack refers to both HPE Smart Storage batteries and HPE Smart Storage Hybrid capacitors.

Procedure

1. Remove the cable clip.

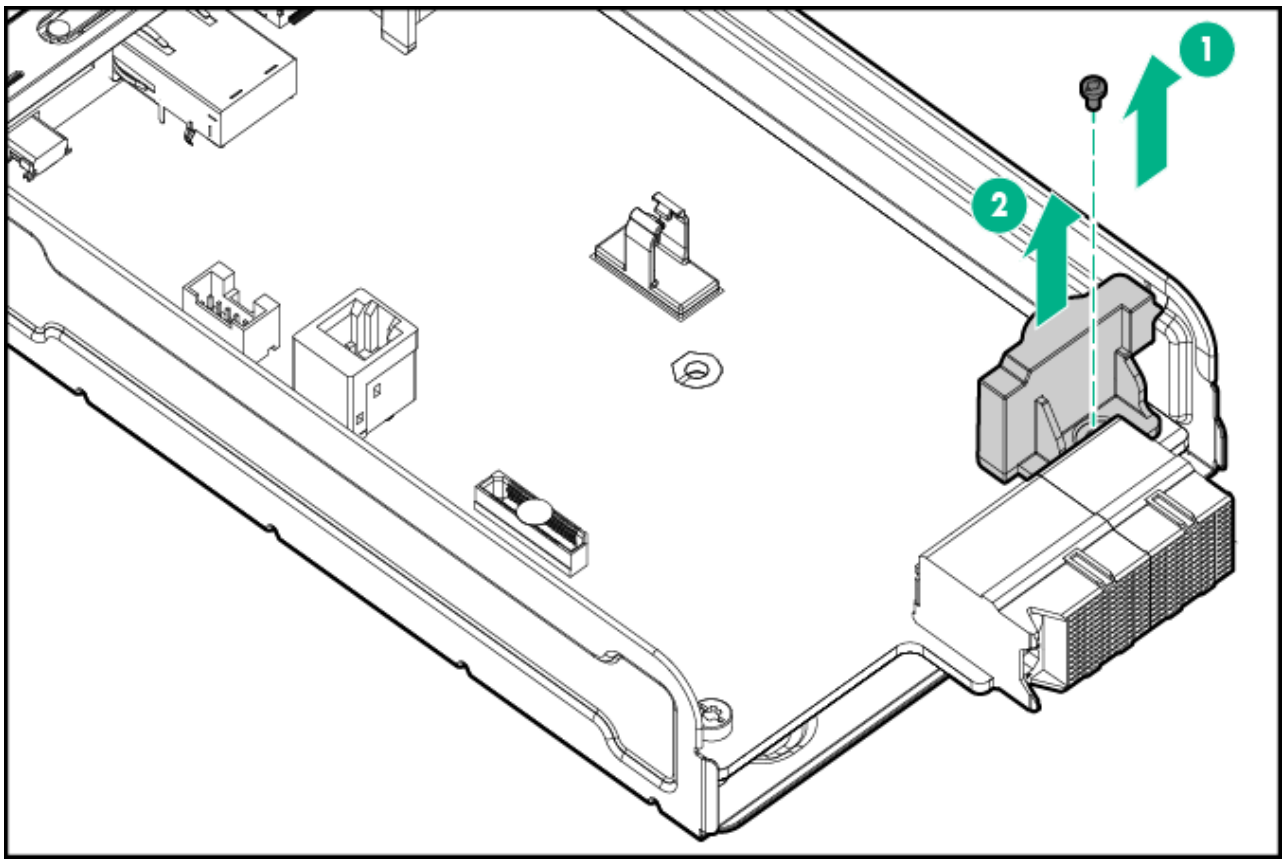

2. Install the Smart Storage Battery.

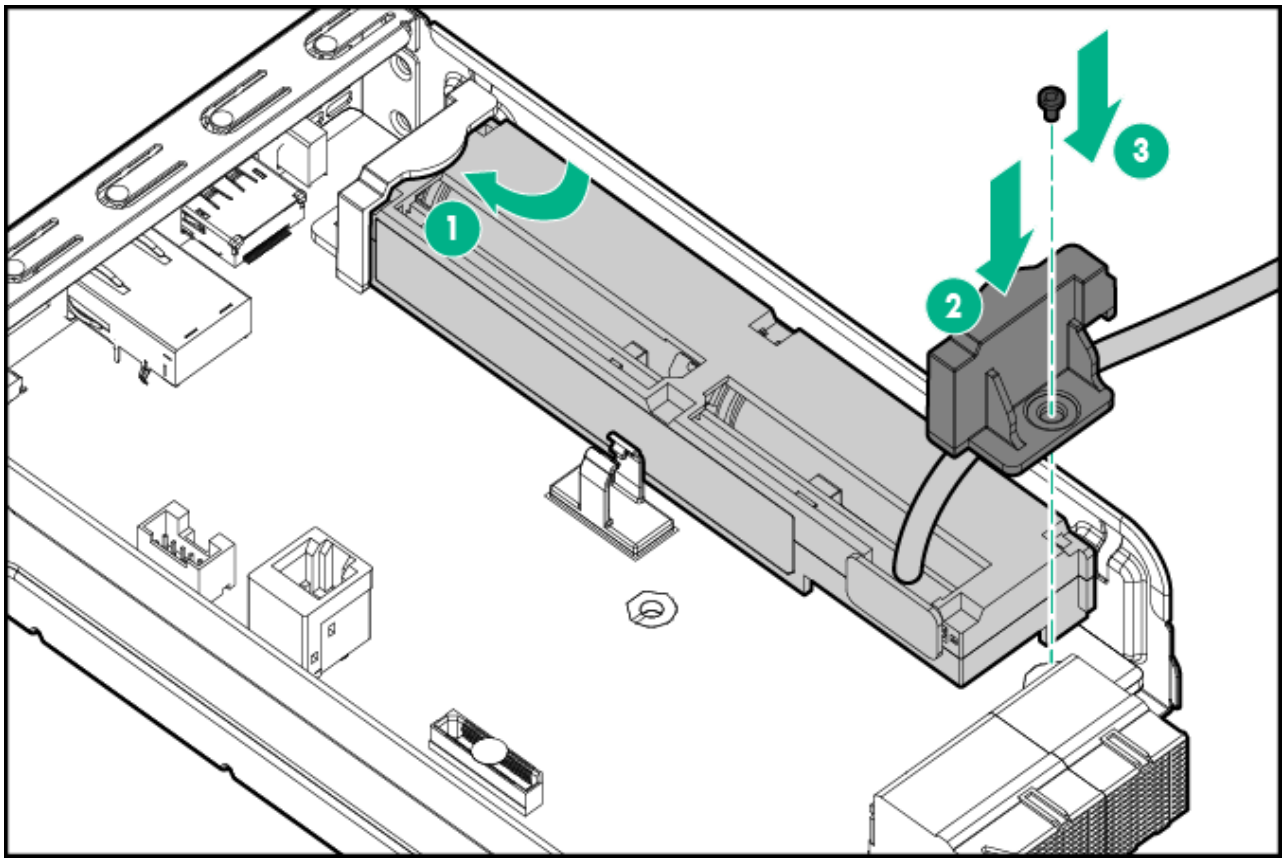

3. Connect the Smart Storage Battery cable to the Smart Storage Battery connector.

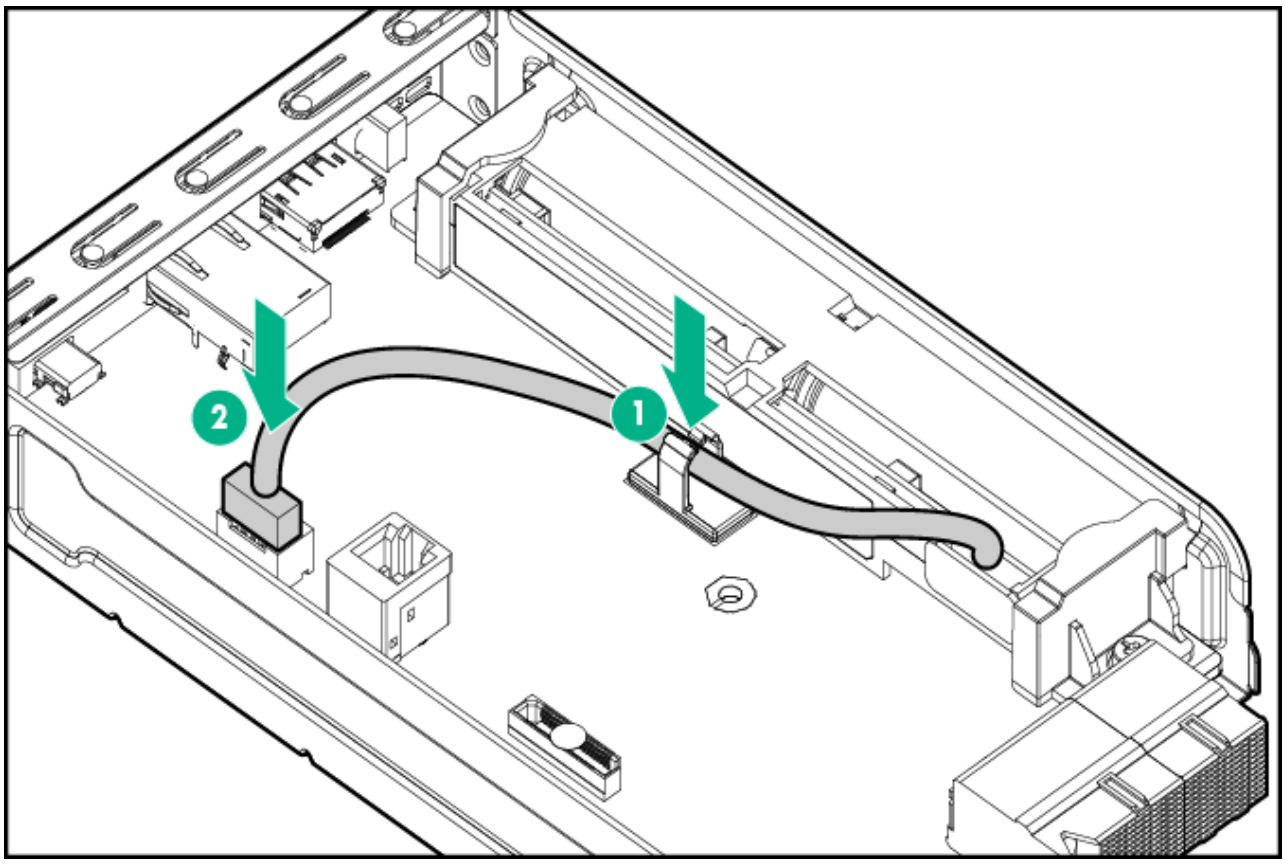

IMPORTANT:
To enable SmartCache or CacheCade in a type-p Smart Array controller, you must:

- Connect the controller backup power cable to the controller backup power connector on the system or riser board.
- Connect the energy pack cable to the connector on the I/O SAS board.

Installing a management module

Procedure

Install the component as indicated.

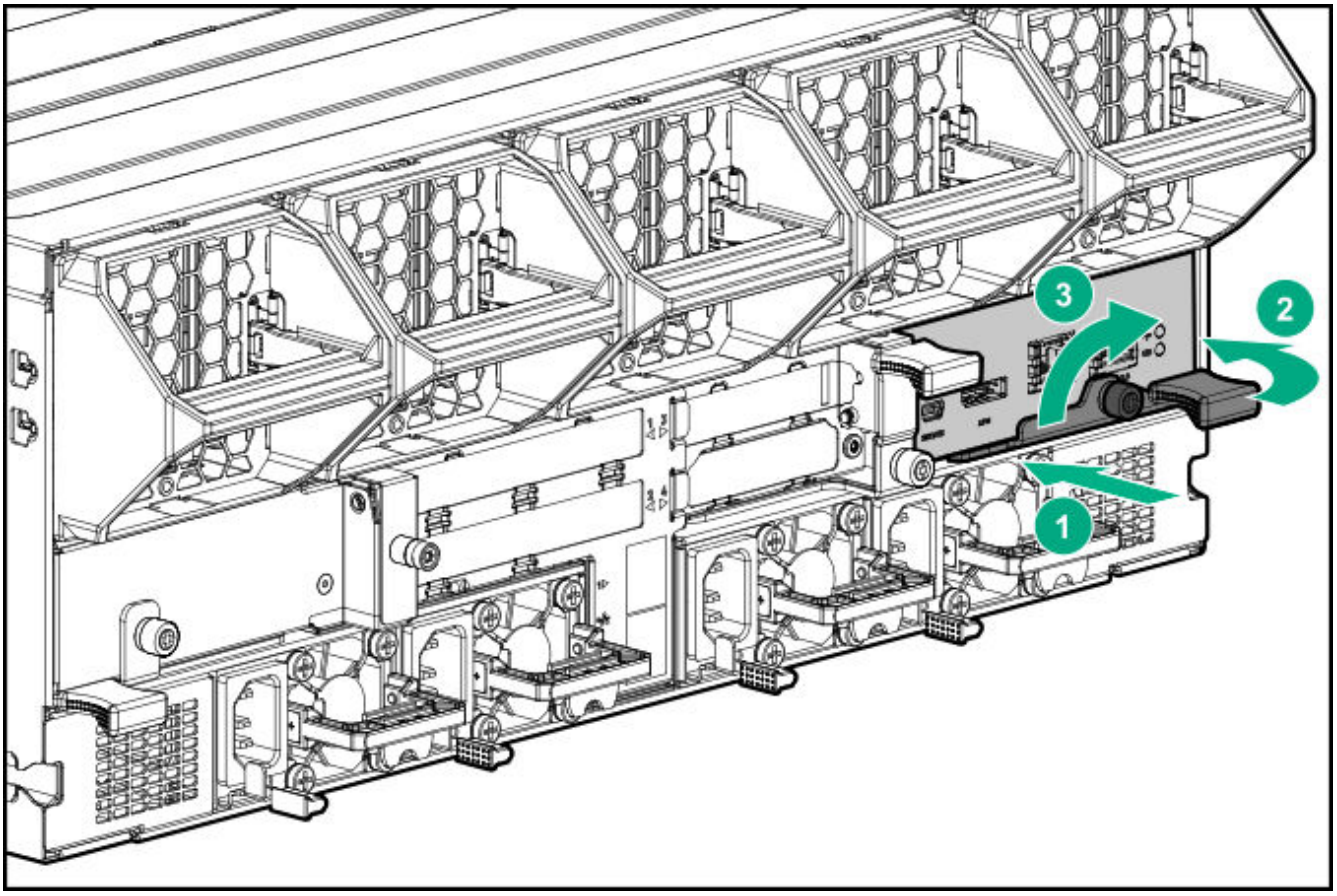

Installing an expansion board

Prerequisites

Use these instructions to install expansion boards such as Smart I/O cards (Pensando DSP DSC-25 2p SFP28 card), controllers, InfiniBand adapters, and accelerators.

Procedure

1. Remove the I/O module.

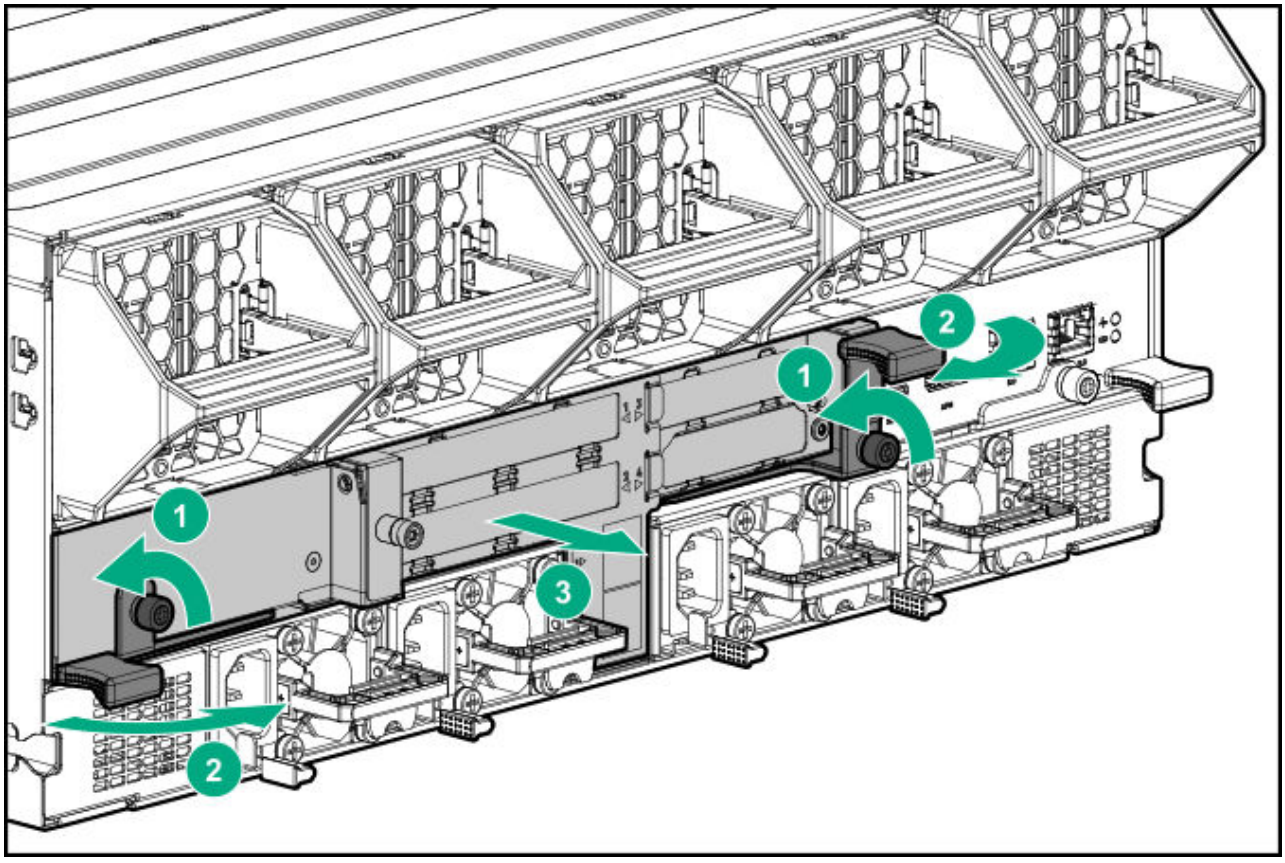

2. Remove the support bracket from the I/O module.

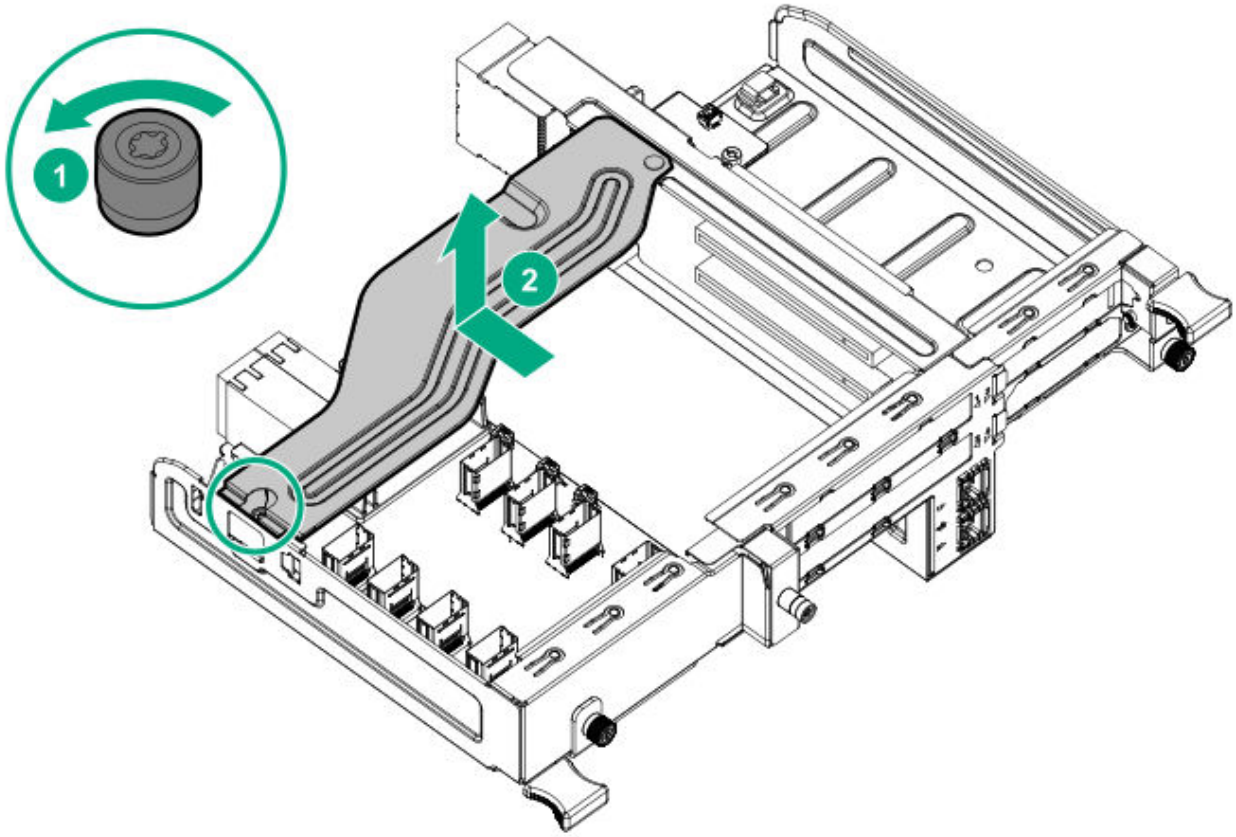

3. Remove the riser assembly from the I/O module.

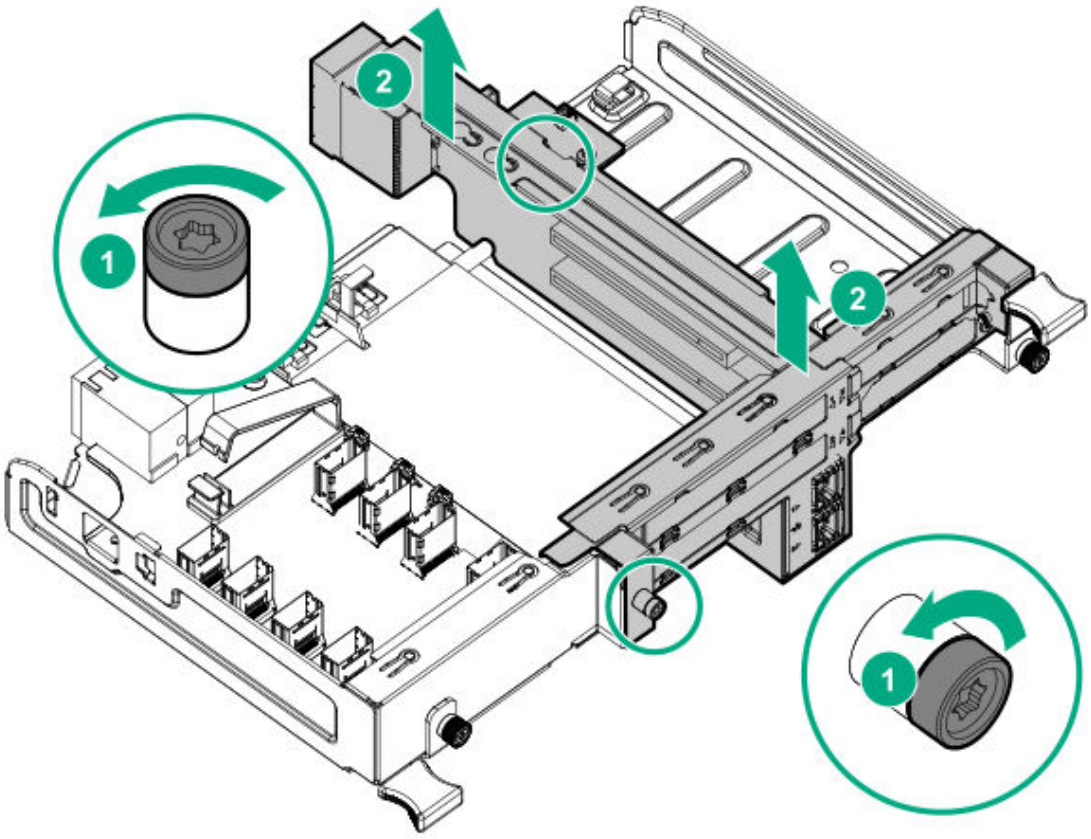

4. Remove the PCIe blank from the expansion slot of the I/O module.

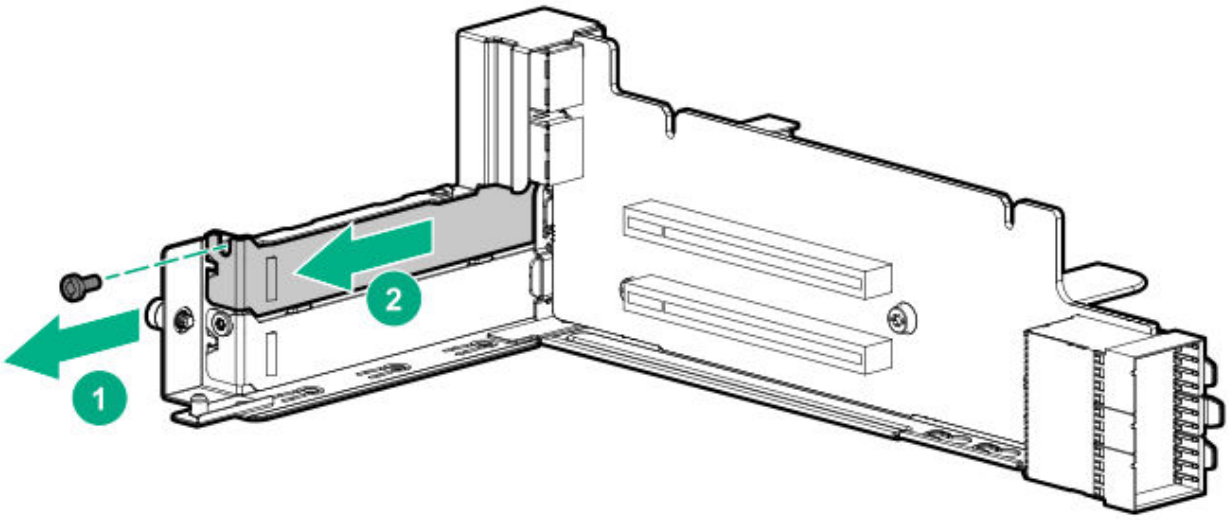

5. Install a supported expansion board option in one of the PCIe expansion slots.

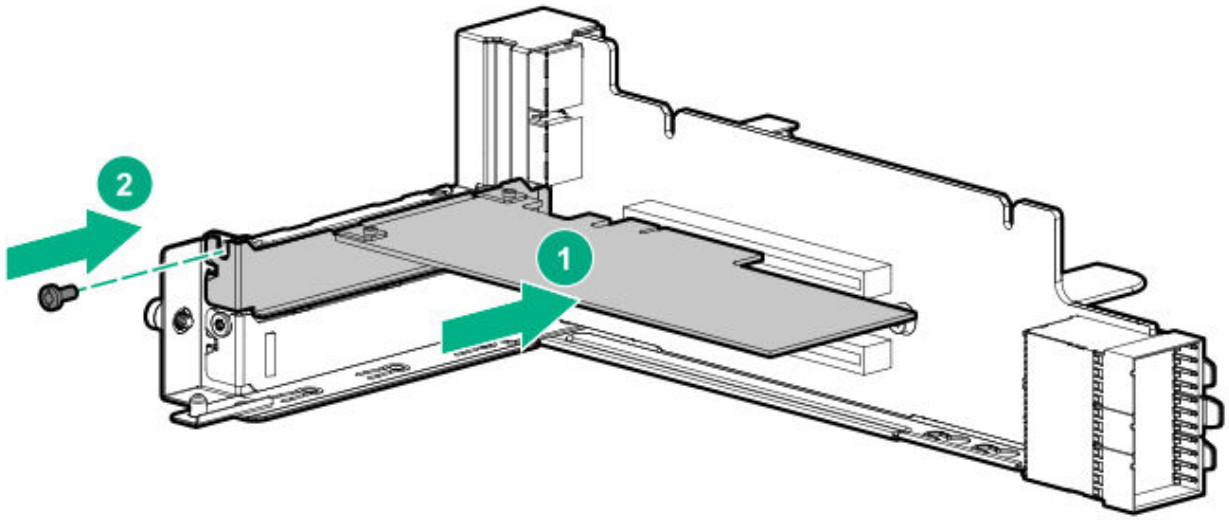

6. Cable the board according to the option installed.

   For more information, see I/O module option cabling.

7. If you are installing a Pensando DSP DSC-25 2p SFP28 card, associate the new DSC-25 card with a Pensando Policy and Services Manager (PSM).

   For more information, see the PSM Enterprise Edition User Guide.

When installing a Smart Array controller, observe the following.

IMPORTANT:
To enable SmartCache or CacheCade in a type-p Smart Array controller, you must:

- Connect the controller backup power cable to the controller backup power connector on the system or riser board.
- Connect the energy pack cable to the connector on the I/O SAS board.

More information

I/O SAS board port identification

Installing the HPE NS204i-p NVMe OS Boot Device option

Prerequisites

Before beginning installation, ensure that the server is updated with the latest operating system firmware and drivers.

Procedure

Installing drives onto the boot device

1. Remove the liner from the thermal interface pad.

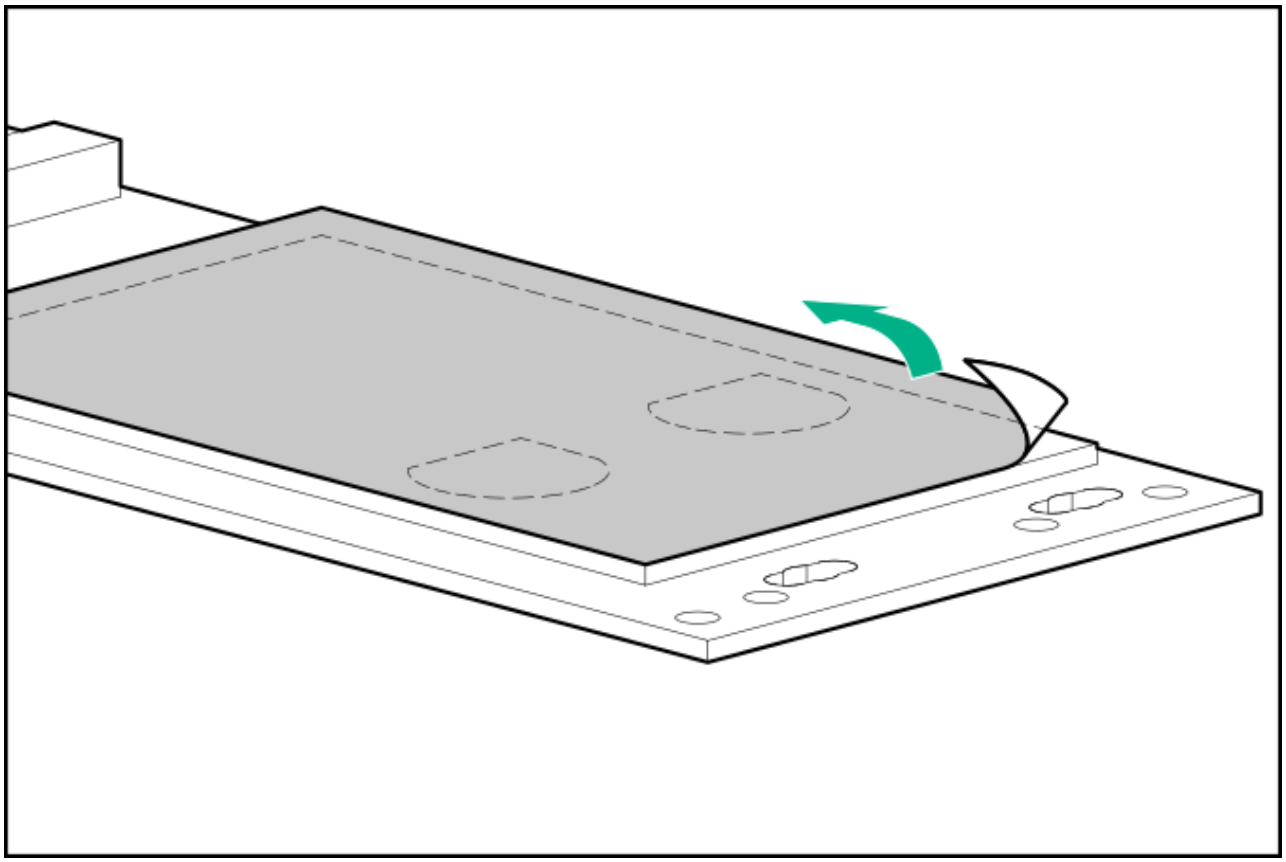

2. Install the drives.

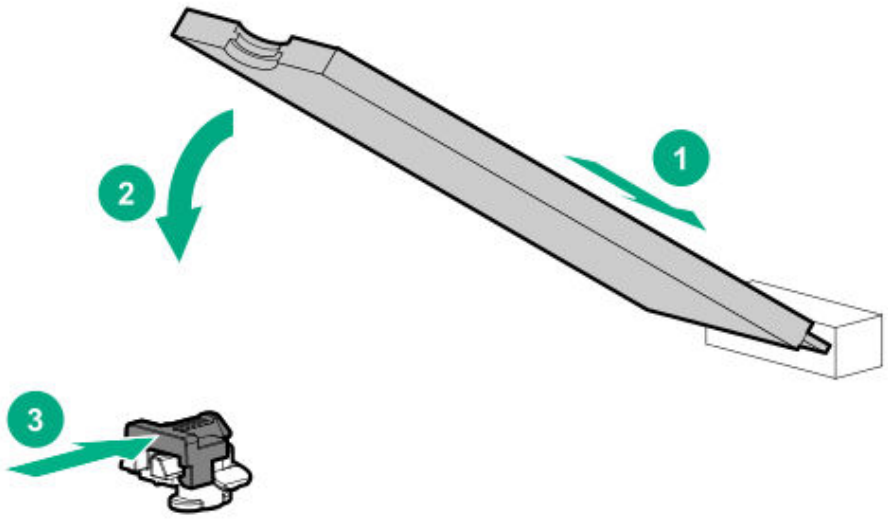

Installing the boot device

3. Remove the I/O module.

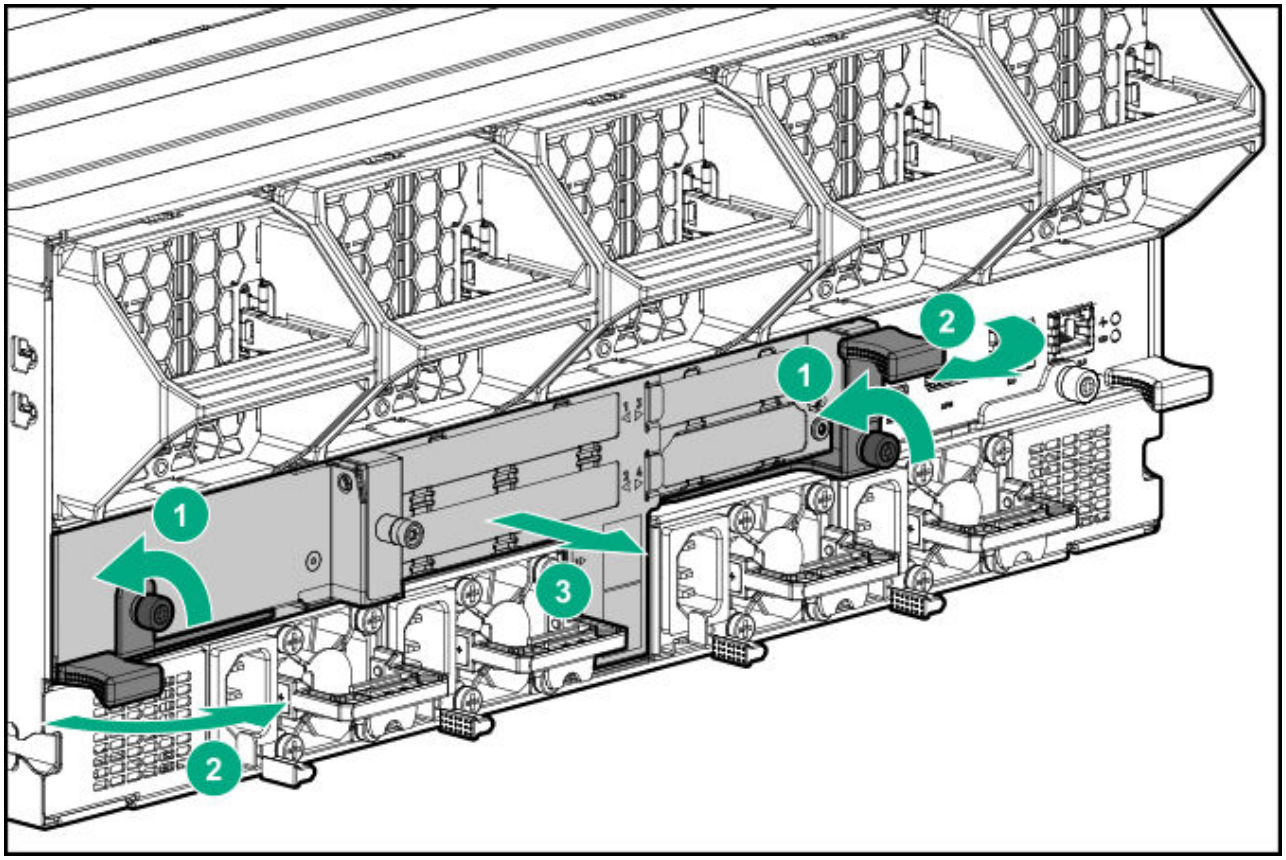

4. Remove the support bracket from the I/O module.

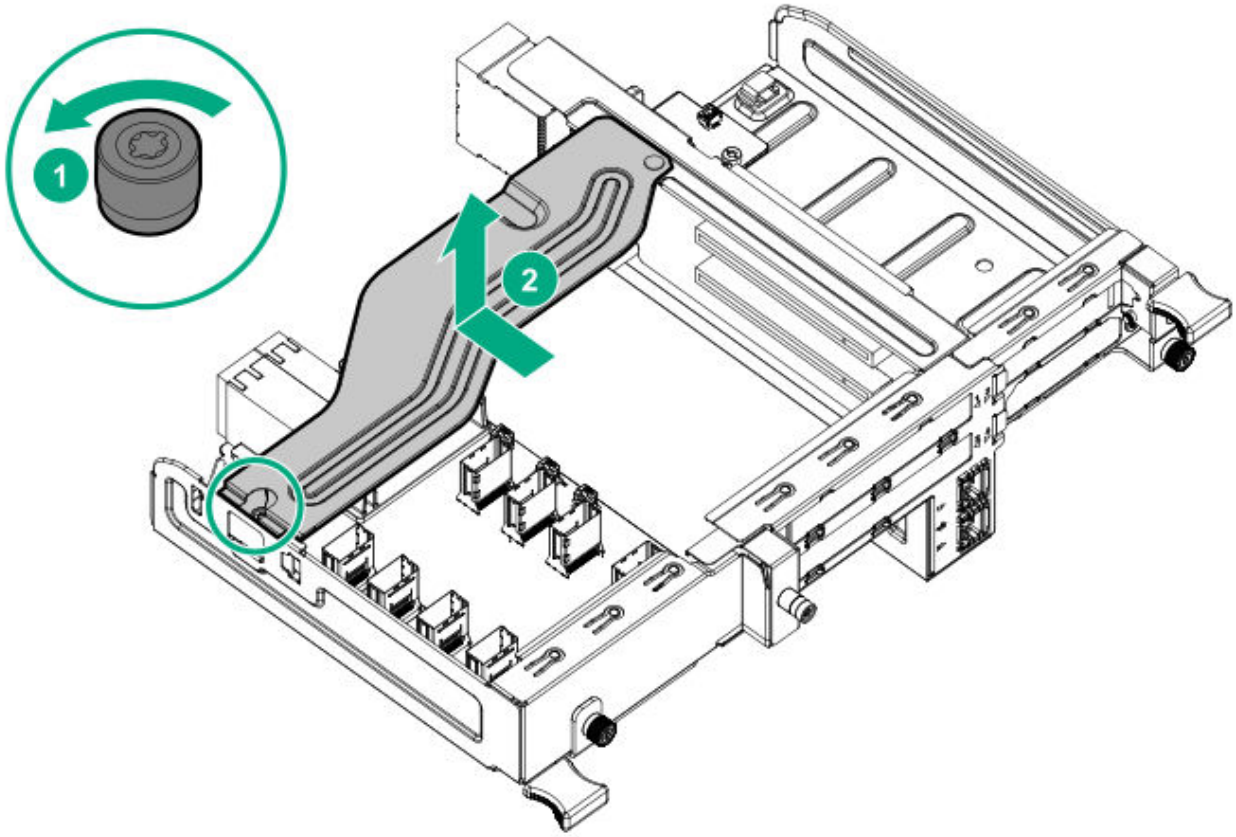

5. Remove the riser assembly from the I/O module.

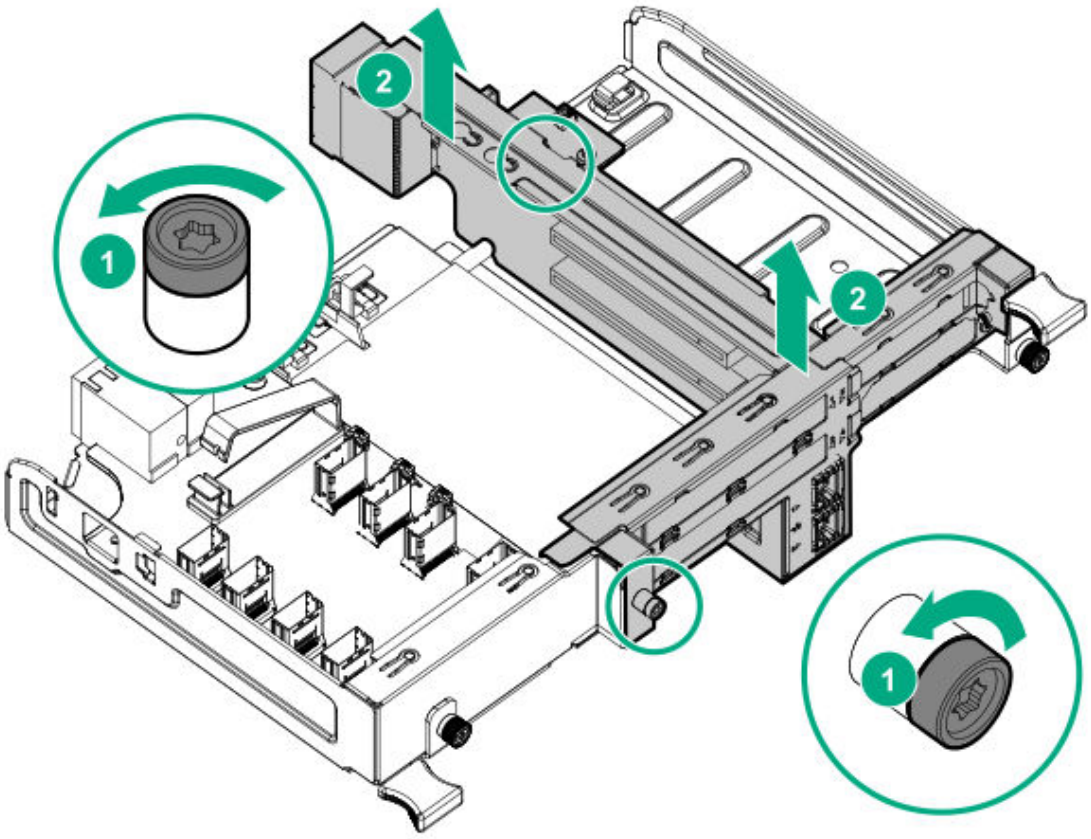

6. Select an available PCIe expansion slot that is x8 physical size and x4 electrical.
7. Remove the PCIe blank from the expansion slot of the I/O module.

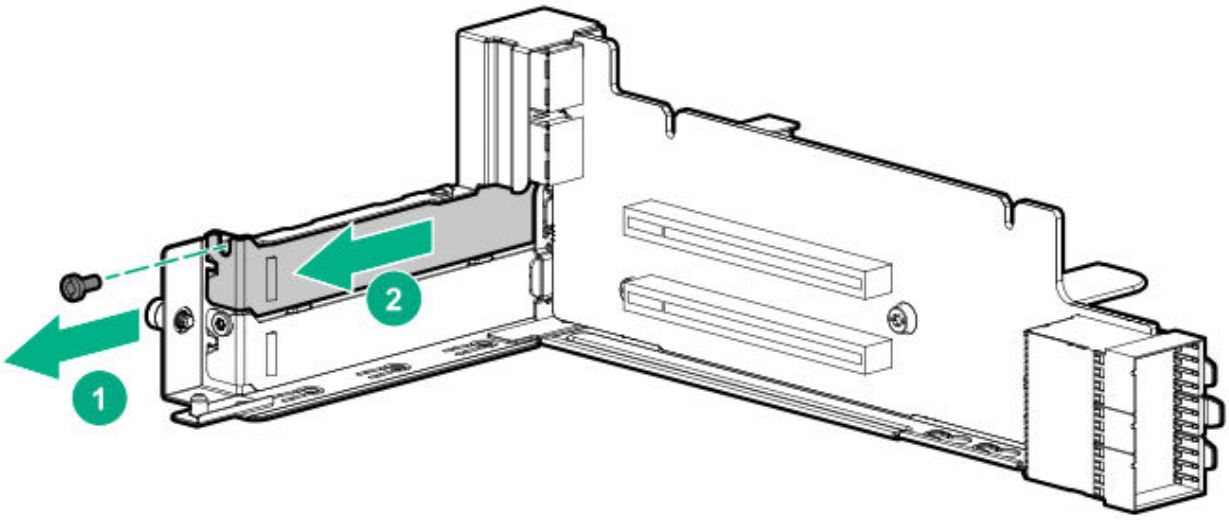

8. Install the boot device.

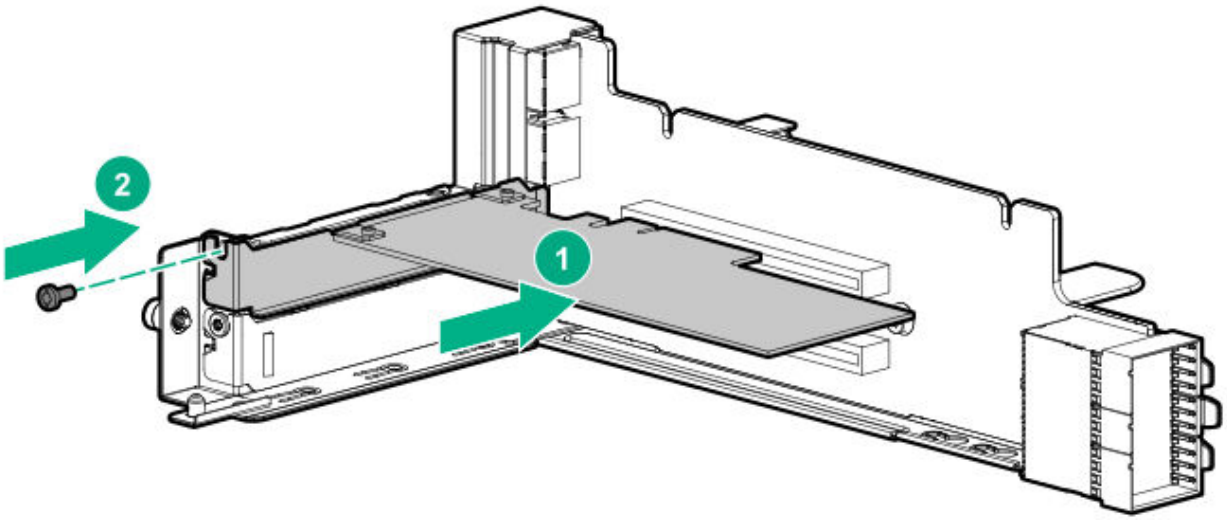

9. Install the components that were removed to access the expansion slot.
10. Power up the server.

Deploying an operating system

11. Deploy a supported operating system to the boot device drive.

    For more information, see the product QuickSpecs (**https://www.hpe.com/info/qs**).

    After the OS installation completes, the system automatically copies the operating system to the second, mirrored drive on the boot device.

12. Proceed with normal system setup and operation.

Installing an I/O module

Install any I/O module options before installing the I/O module into the chassis.

WARNING: To reduce the risk of electric shock, fire, or damage to the equipment, do not plug telephone or telecommunications connectors into RJ-45 connectors.

Prerequisites

To install the 3x/1x I/O module, you must have ROM U40 version 1.30 or later installed.

Procedure

Install the component as indicated.

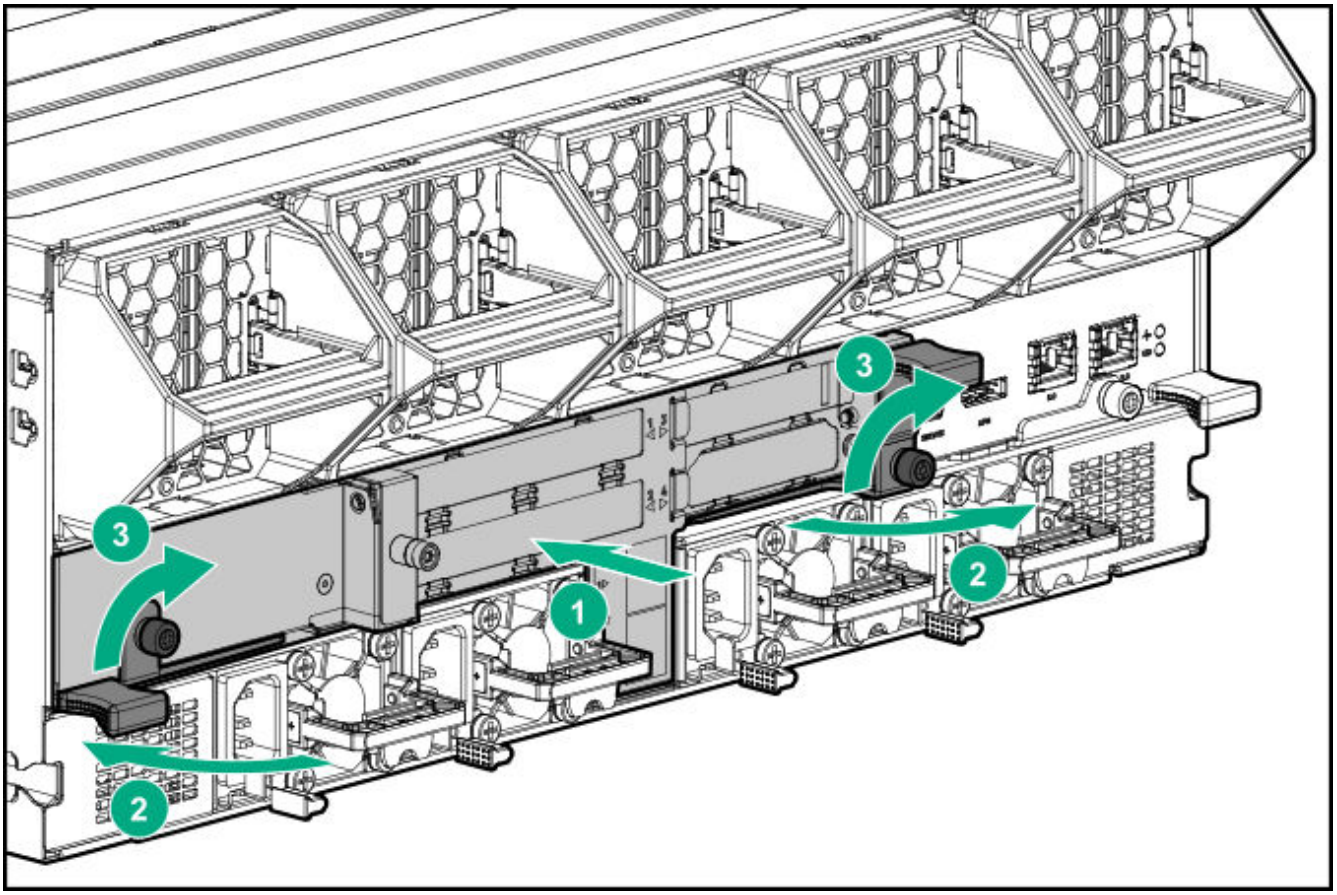

Installing a fan louver

Procedure

Install the fan louver as indicated.

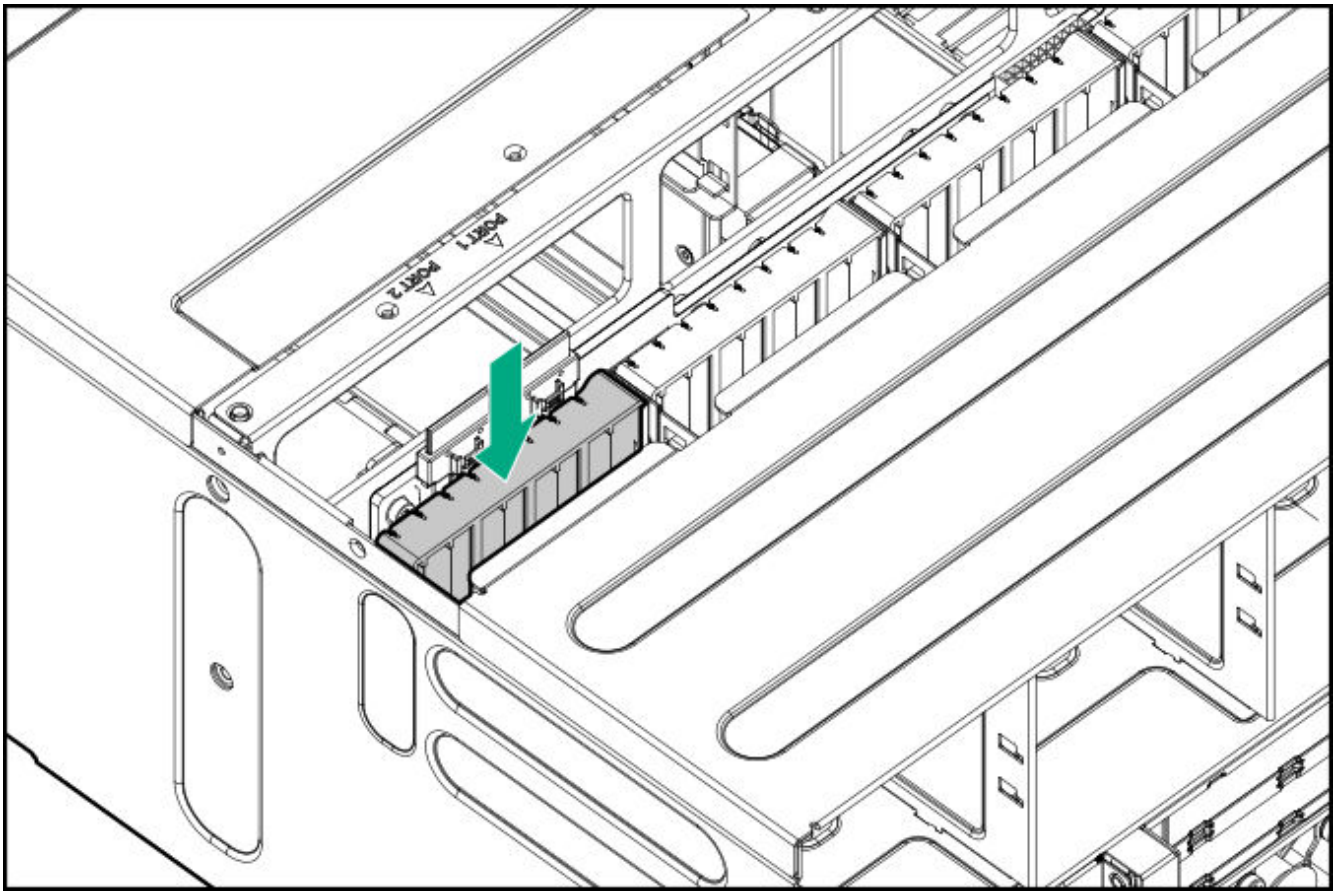

Installing the midplane assembly

Procedure

1. Install the midplane assembly in the chassis, and then secure the assembly by installing the two screws on the sides of the chassis.

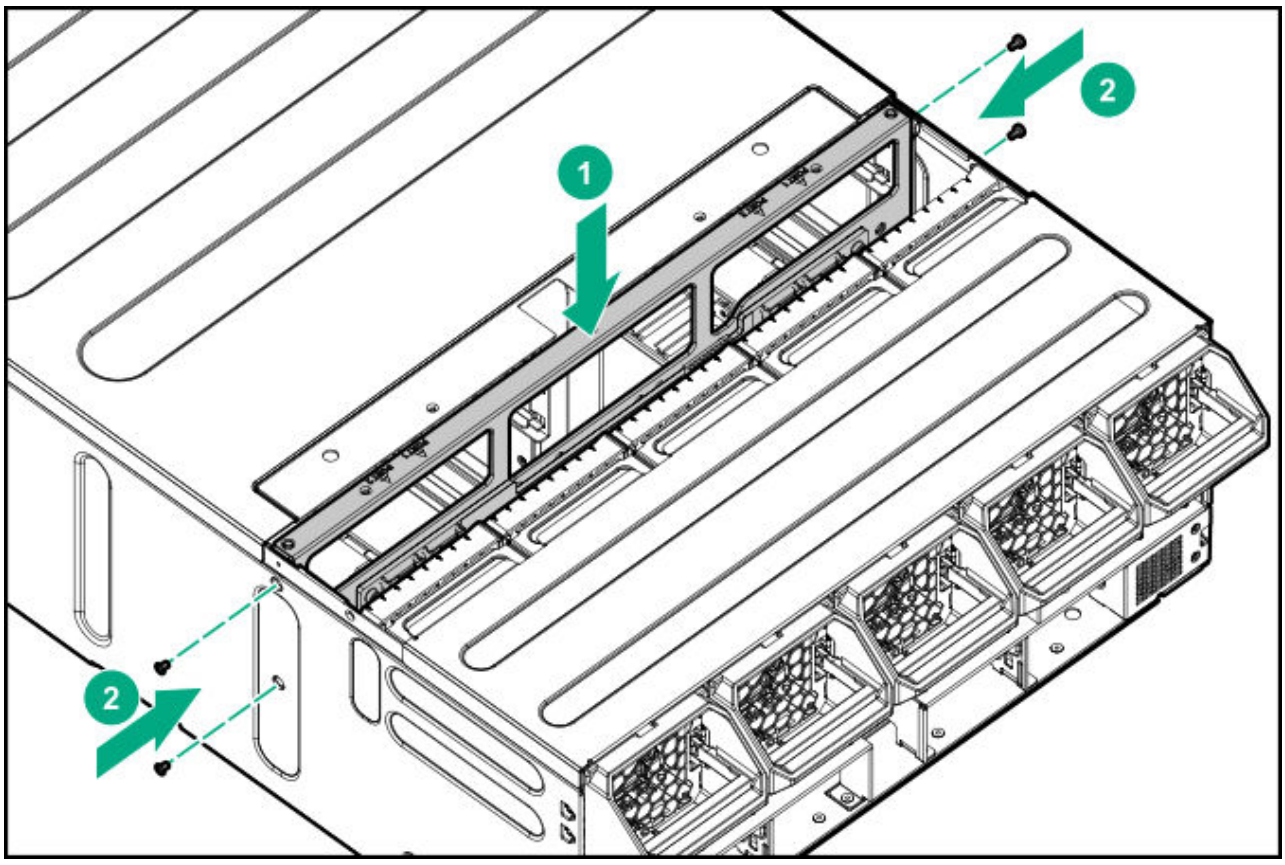

2. Connect the four drive data cables that connect to the midplane.
3. Connect the two fan cables that connect to the midplane.
4. Install the midplane assembly cover by installing the five screws on the top and the two screws on the sides.

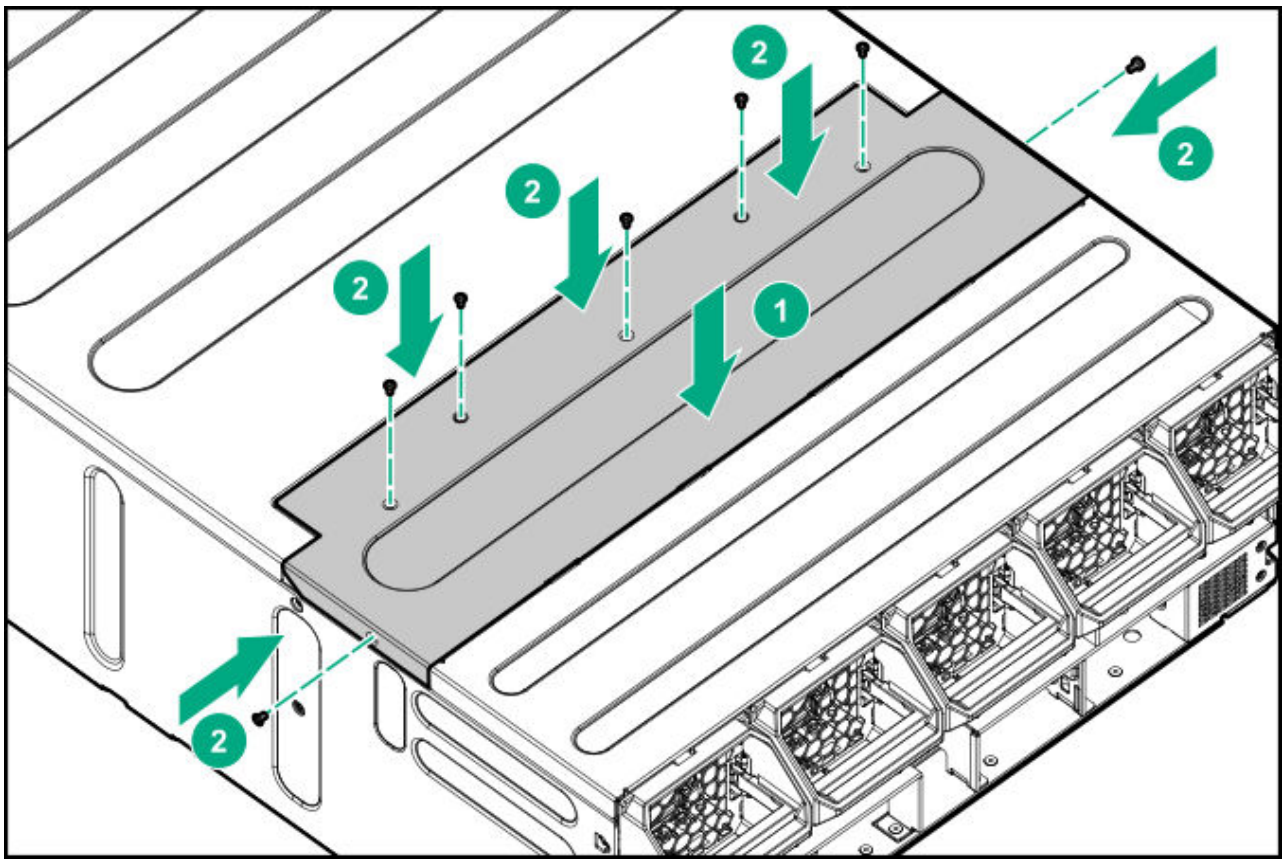

Cabling and powering up the chassis

Connecting the Management module to the network with the iLO ports

Procedure

If using the Management module iLO ports to connect the chassis to the network, connect all cables to the Management module and the network.

The arrow indicates the connection to the network.

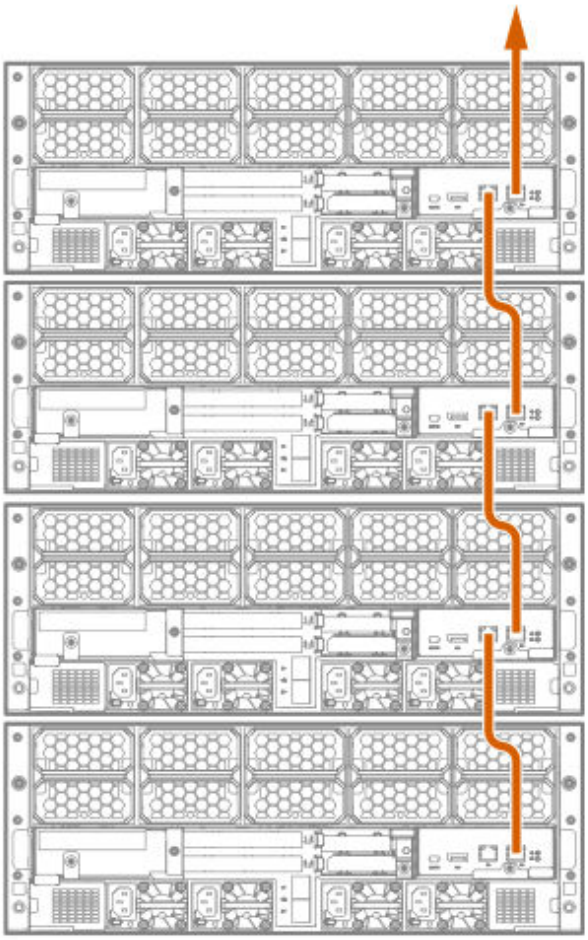

Connecting the optional HPE APM module

Procedure

1. Connect the APM to the network (orange).
2. Connect the APM to the APM ports (blue).

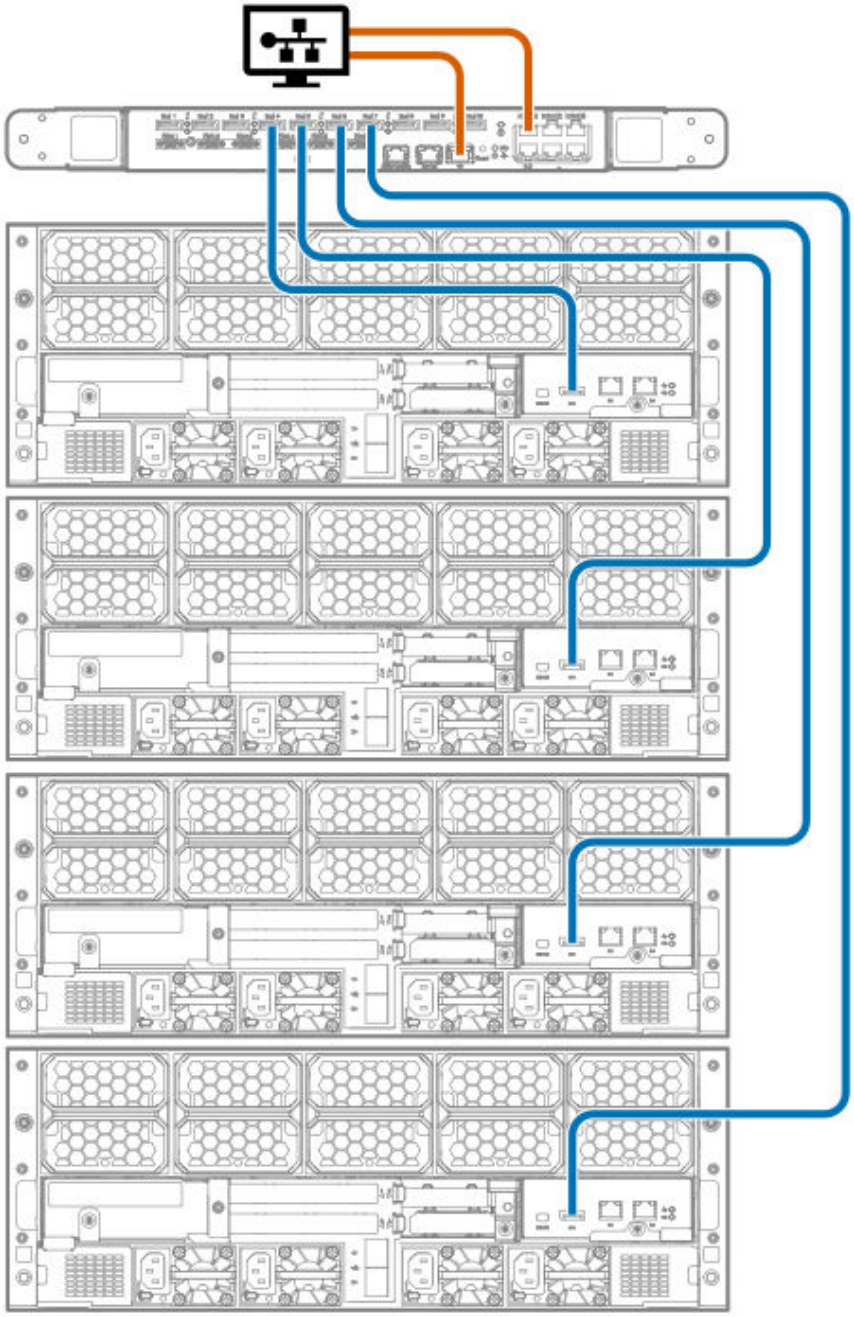

I/O module option cabling

HPE Smart Array E208i-p SR Gen10 Controller cabling

The HPE Apollo 4510 Gen10 Chassis supports single and dual installation for the HPE Smart Array E208i-p SR Gen10 Controller.
Hewlett Packard Enterprise recommends installing a single controller board in slot 2. Installing a controller board in slot 1 requires that the second processor is installed in the server.

- Single-board option

Figure 10: Mini SAS cabling with a single E208i-p board

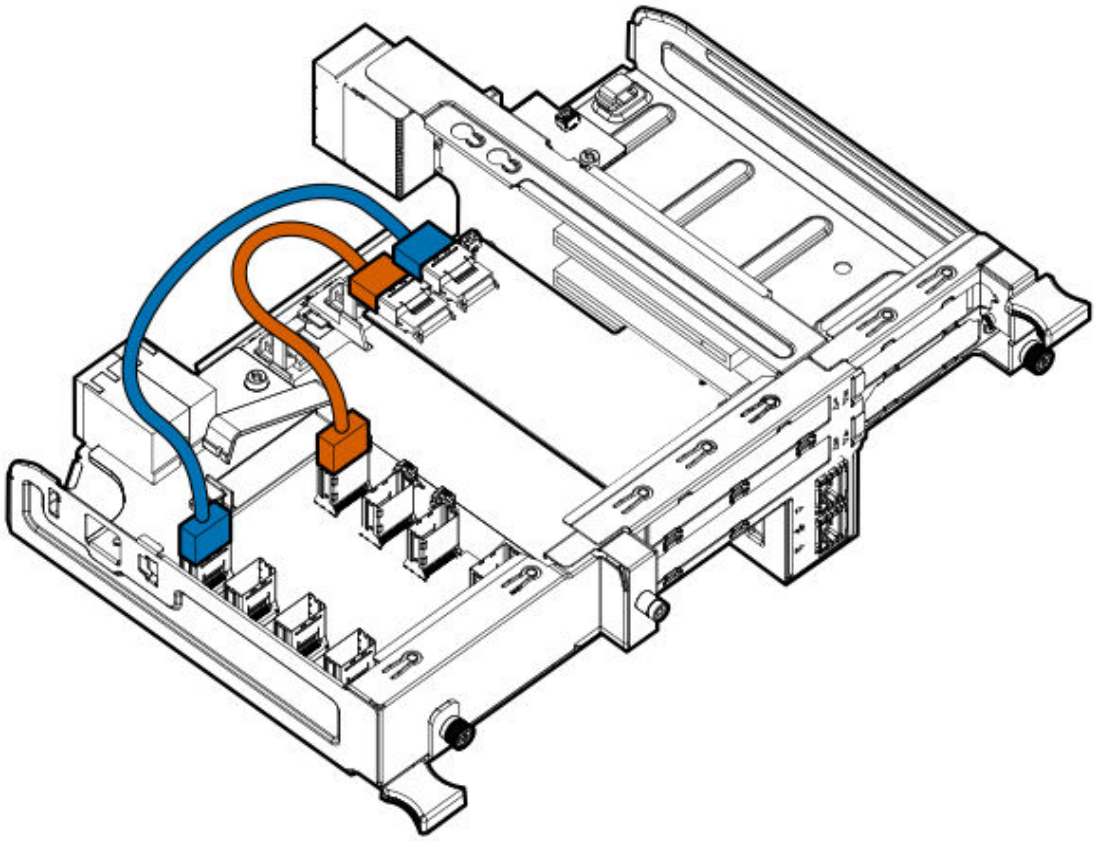

- Dual-board option

Figure 11: Mini SAS cabling with dual E208i-p boards

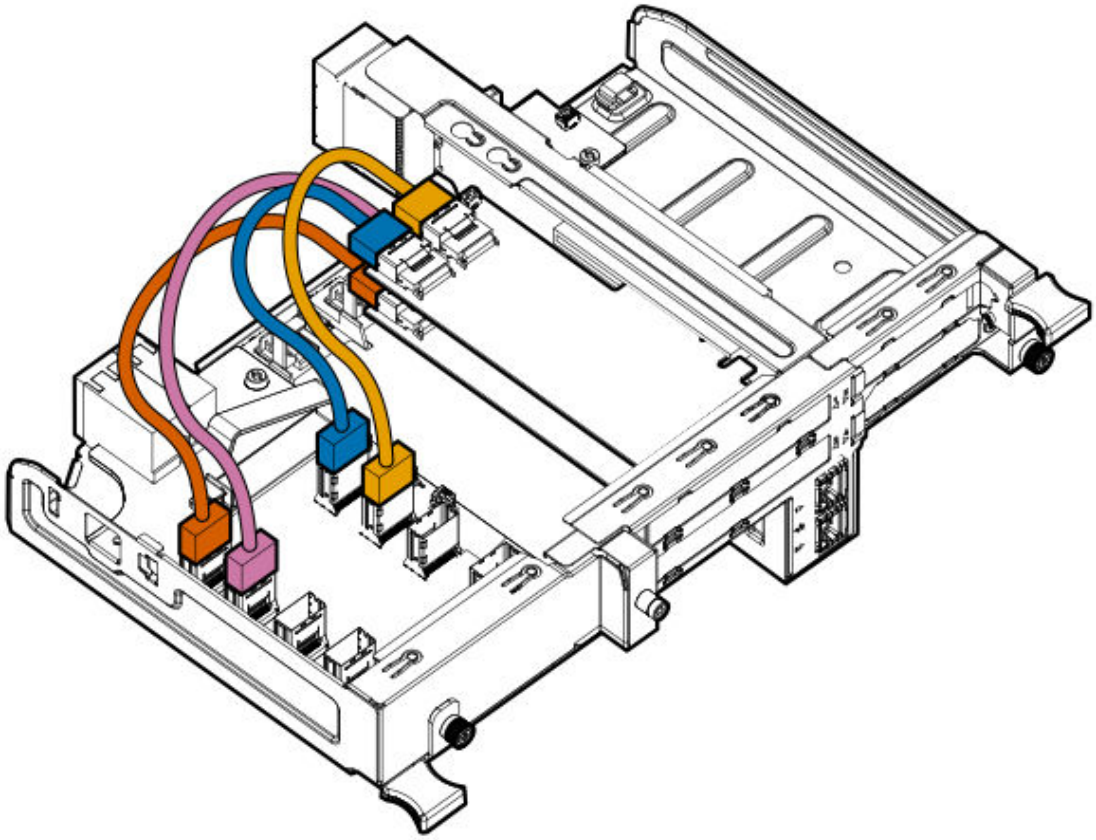

HPE Smart Array P408i-p SR Gen10 Controller cabling

The HPE Apollo 4510 Gen10 Chassis supports single and dual installation for the HPE Smart Array P408i-p SR Gen10 Controller.
Hewlett Packard Enterprise recommends installing a single controller board in slot 2. Installing a controller board in slot 1 requires that the second processor is installed in the server.

- Single-board option

Figure 12: Mini SAS cabling with a single P408i-p board

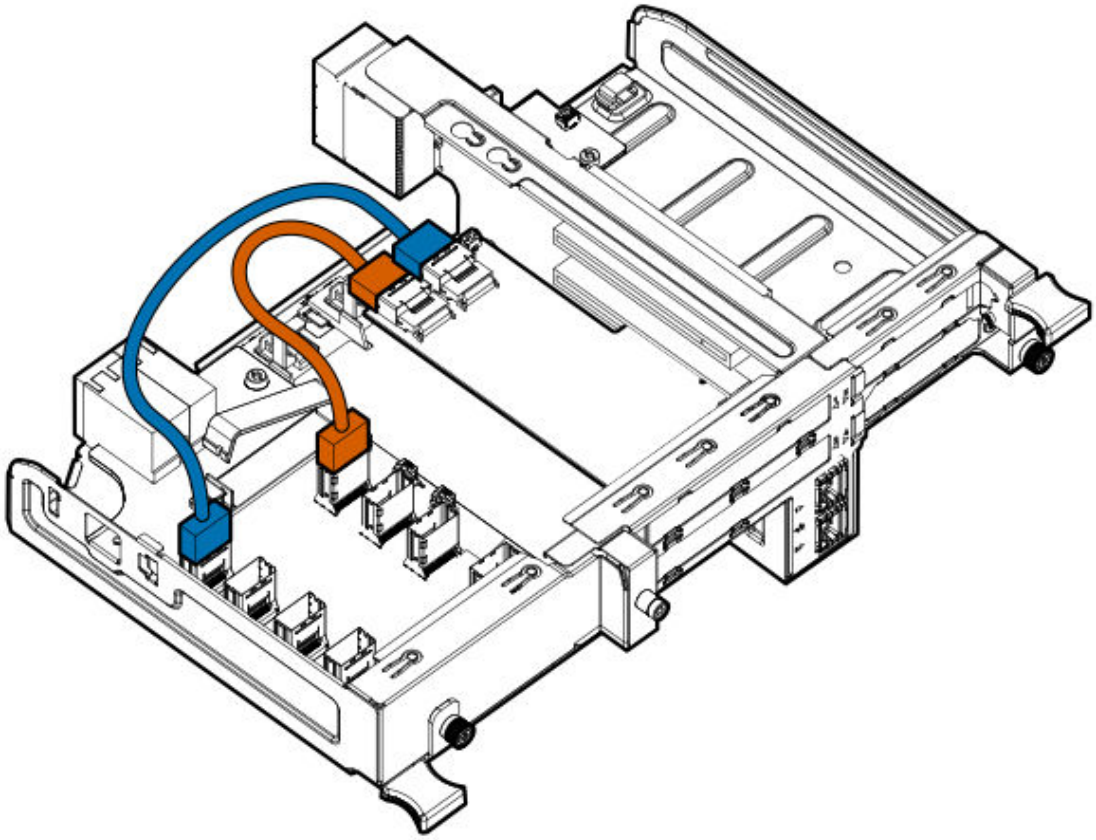

Figure 13: Smart Storage cache backup power cabling with a single P408i-p board

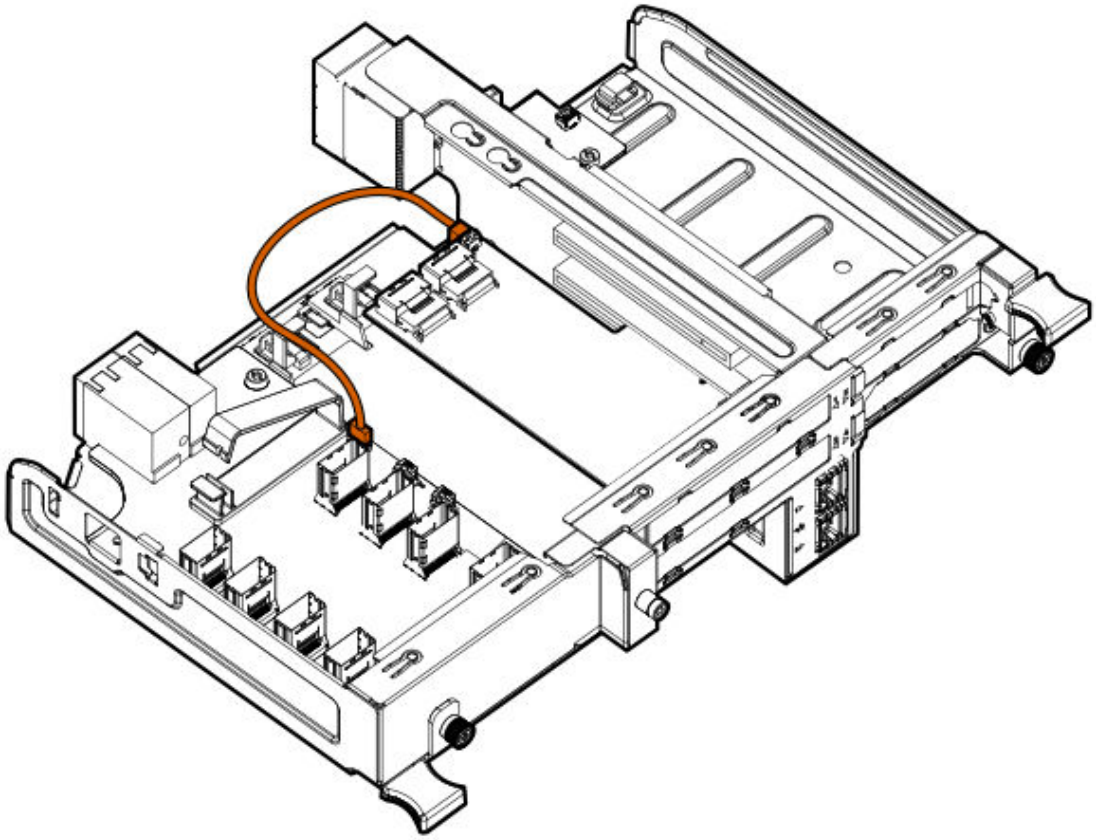

- Dual-board option

Figure 14: Mini SAS cabling with dual P408i-p boards

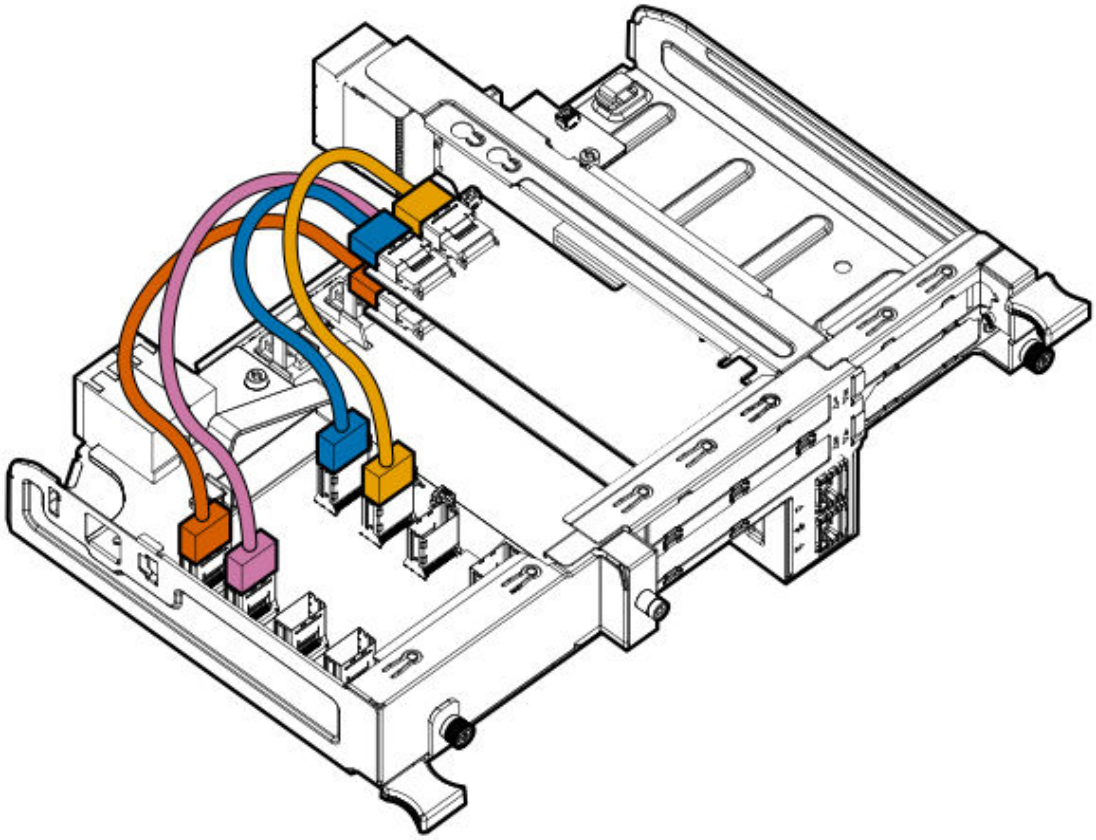

Figure 15: Smart Storage cache backup power cabling with dual P408i-p boards

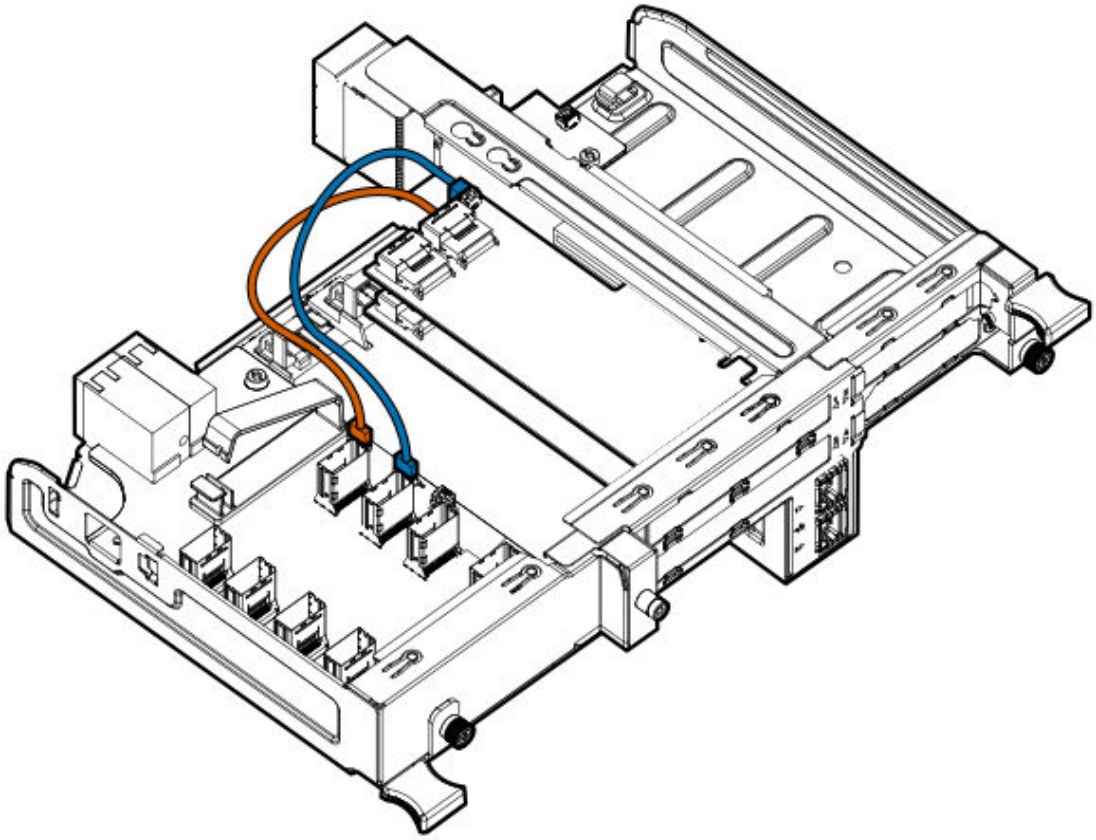

More information

Controller backup power connectors

HPE Smart Array P824i-p MR Gen10 Controller cabling

The HPE Apollo 4510 Gen10 Chassis supports single and dual installation for the HPE Smart Array P824i Gen10 Controller.
Hewlett Packard Enterprise recommends installing a single controller board in slot 2. Installing a controller board in slot 1 requires that the second processor is installed in the server.

- Single-board option

Figure 16: SAS cabling with a single P824i-p controller

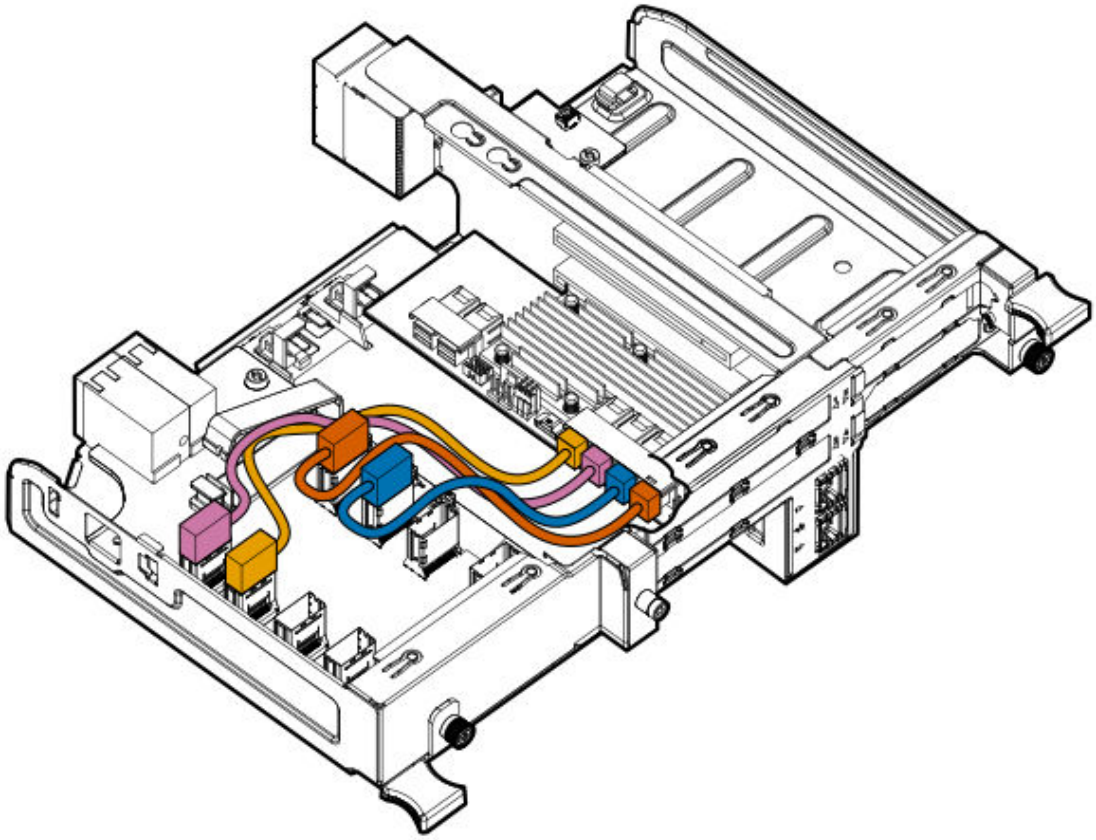

Figure 17: Smart Storage cache backup power cabling with a single P824i-p controller

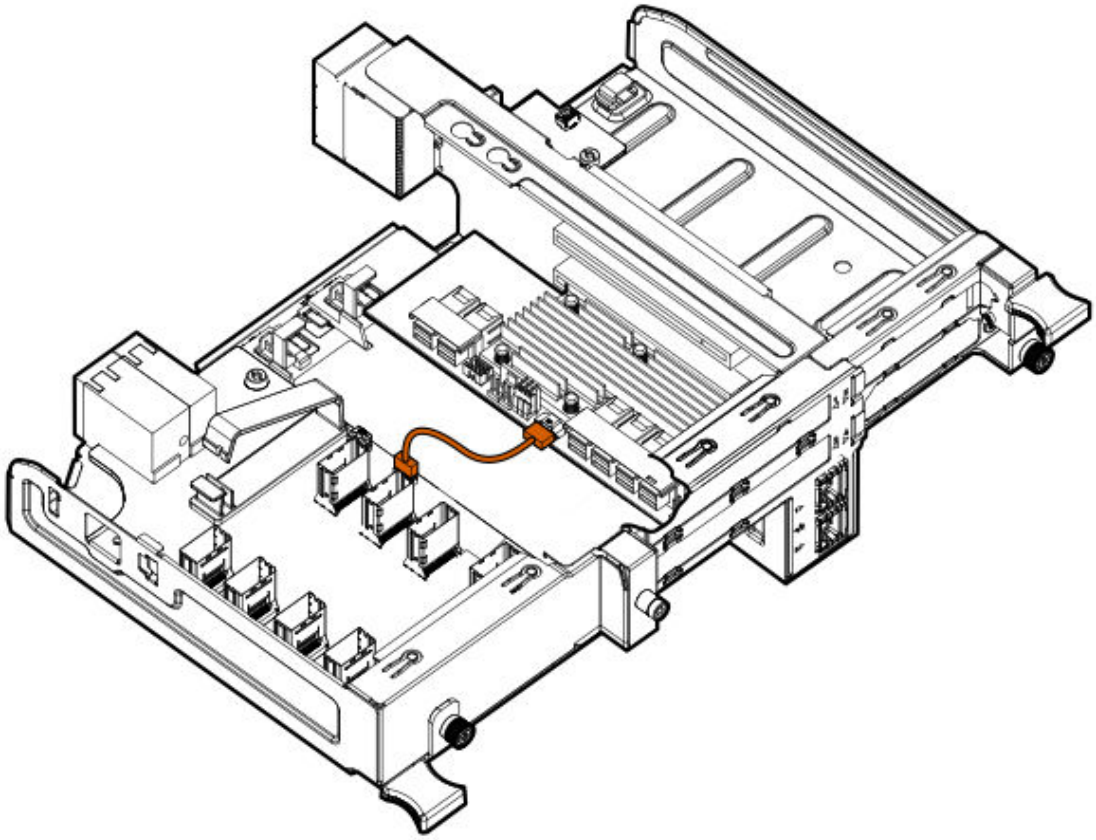

- Dual-board option

Figure 18: SAS cabling with dual P824i-p controllers

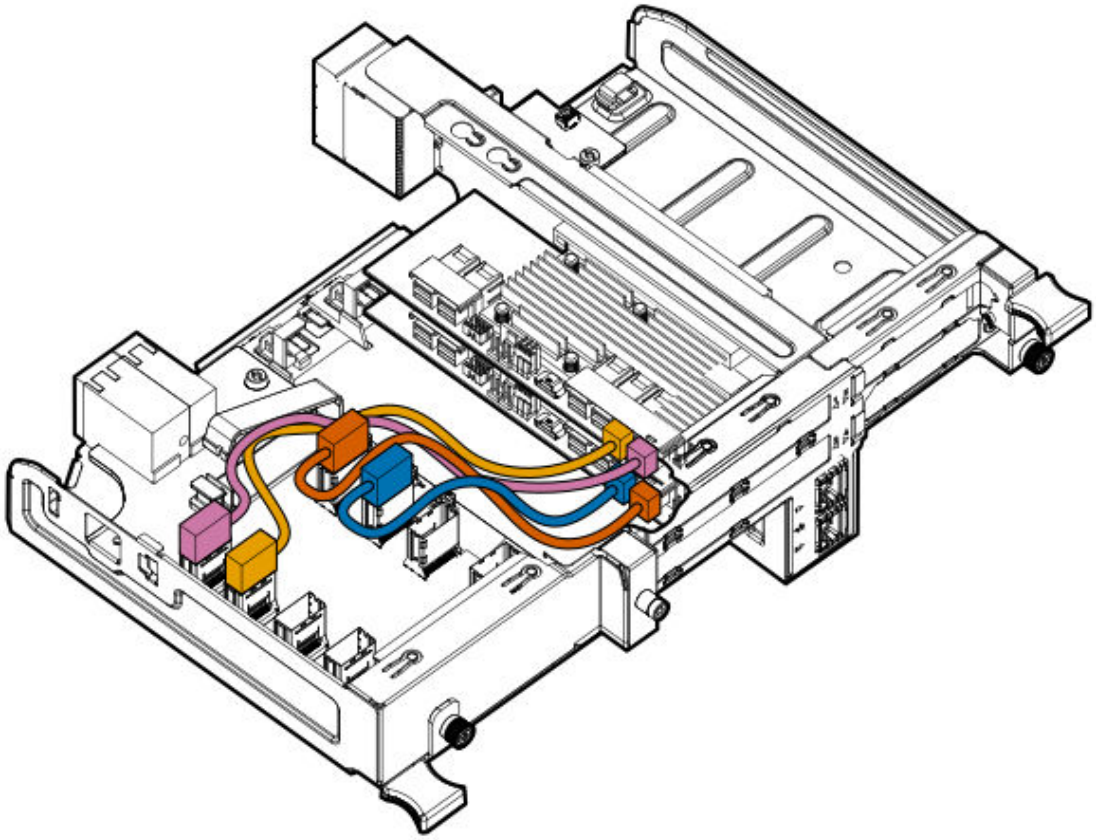

Figure 19: Smart Storage cache backup power cabling with dual P824i-p controllers

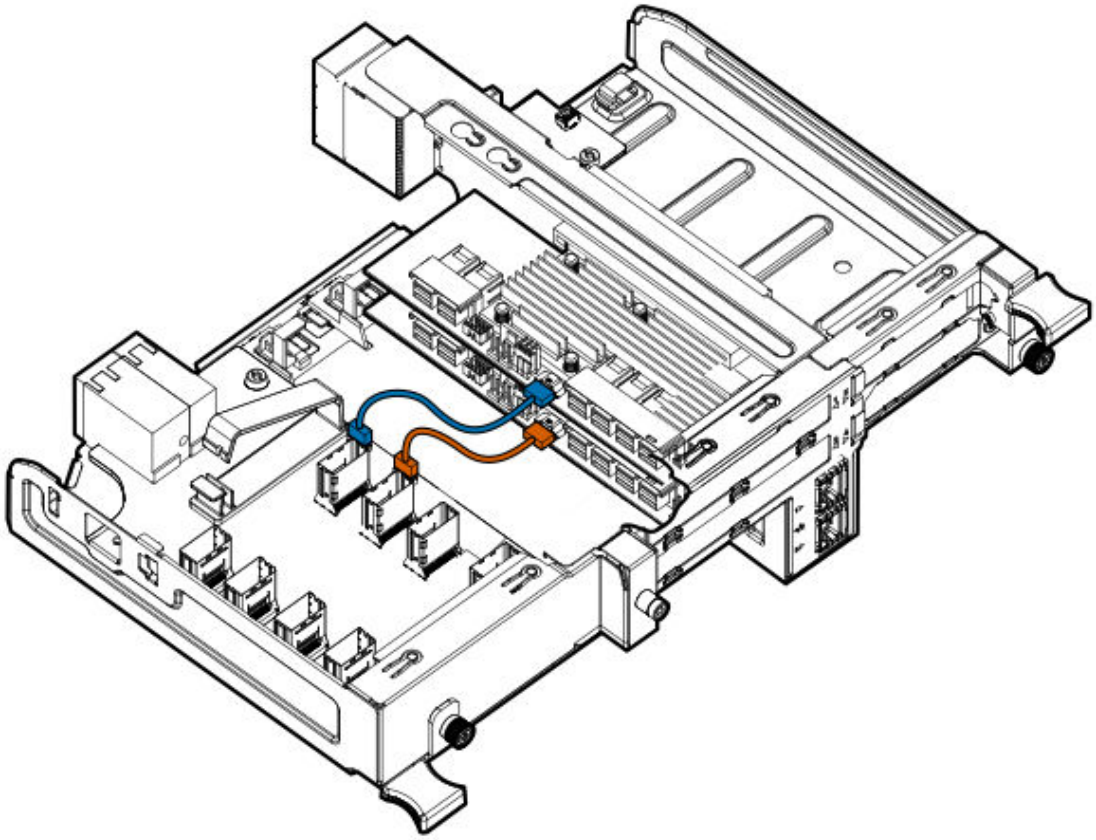

More information

Controller backup power connectors

HPE Smart Storage Battery cabling

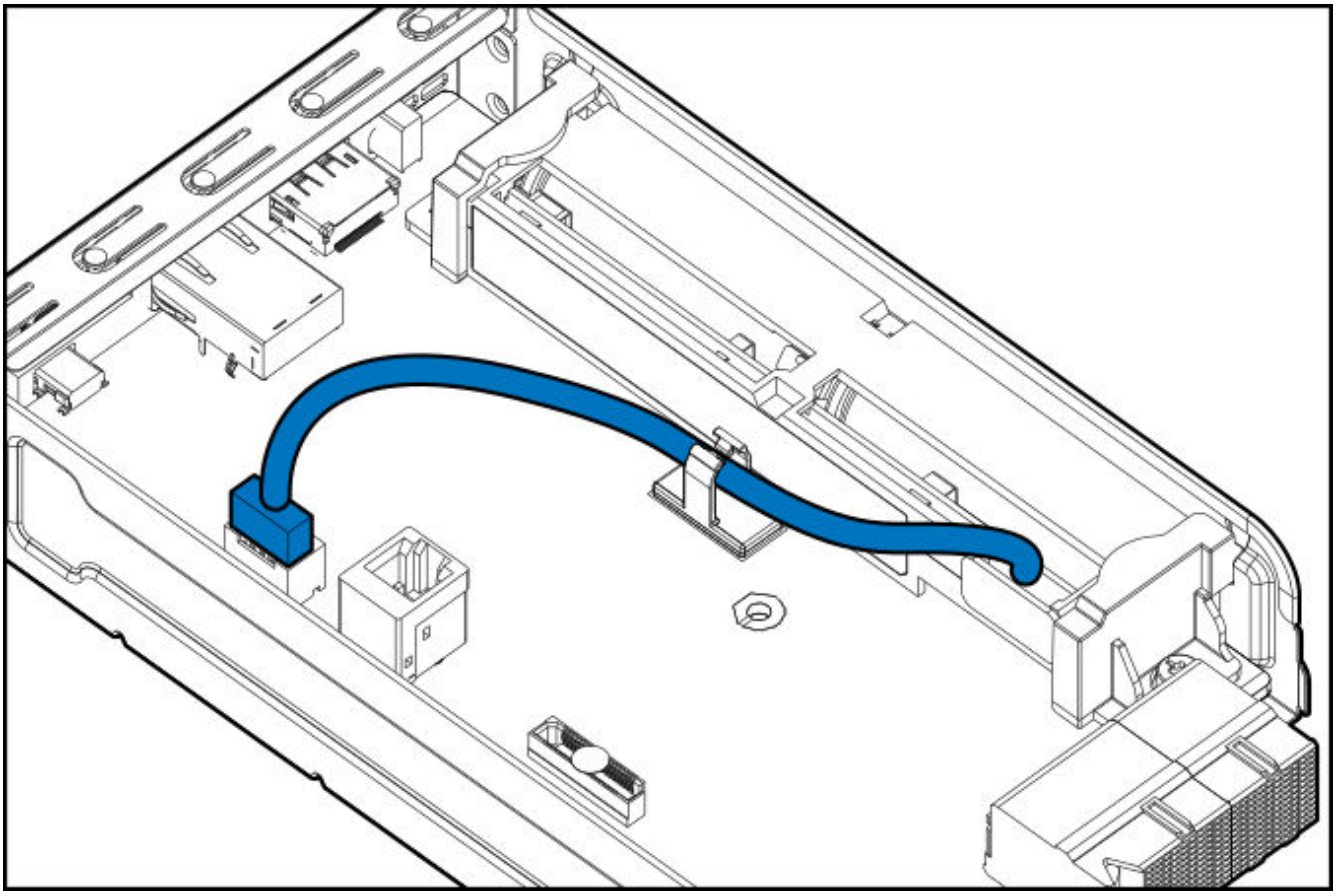

Powering up the system

Procedure

1. Connect the power cables to the power supplies.
2. Connect the power cables to the power source (UPS or wall outlet) or to an installed PDU.
3. Press the Power On/Standby button on the server.

Troubleshooting

Important safety information

Familiarize yourself with the safety information in the following sections before troubleshooting the server.

Important safety information

Before servicing this product, read the Important Safety Information document provided with the server.

Symbols on equipment

The following symbols may be placed on equipment to indicate the presence of potentially hazardous conditions.

	This symbol indicates Hewlett Packard Enterprise systems and peripherals that contain assemblies and components that are sensitive to electrostatic discharge. Carefully observe the precautions and recommended procedures in this document to prevent component damage from static electricity.

 	This symbol indicates the presence of hazardous energy circuits or electric shock hazards. Refer all servicing to qualified personnel. **WARNING:** To reduce the risk of injury from electric shock hazards, do not open this enclosure. Refer all maintenance, upgrades, and servicing to qualified personnel.

 	This symbol indicates the presence of electric shock hazards. The area contains no user or field serviceable parts. Do not open for any reason. **WARNING:** To reduce the risk of injury from electric shock hazards, do not open this enclosure.

 	This symbol on an RJ-45 receptacle indicates a network interface connection. **WARNING:** To reduce the risk of electric shock, fire, or damage to the equipment, do not plug telephone or telecommunications conn ectors into this receptacle.

 	This symbol indicates the presence of a hot surface or hot compon ent. If this surface is contacted, the potential for injury exists. **WARNING:** To reduce the risk of injury from a hot component, allo w the surface to cool before touching.

 	This symbol indicates that the component exceeds the recommen ded weight for one individual to handle safely. **WARNING:** To reduce the risk of personal injury or damage to the equipment, observe local occupational health and safety requirem ents and guidelines for manual material handling.
102.00 kg 225.00 lb	

	These symbols, on power supplies or systems, indicate that the eq uipment is supplied by multiple sources of power. **WARNING:** To reduce the risk of injury from electric shock, remove all power cords to disconnect power from the system completely.

Troubleshooting resources

Troubleshooting resources are available for HPE Gen10 and Gen10 Plus server products in the following documents:

- Troubleshooting Guide for HPE ProLiant Gen10 and Gen10 Plus servers provides procedures for resolving common problems and comprehensive courses of action for fault isolation and identification, issue resolution, and software maintenance.
- Error Message Guide for HPE ProLiant Gen10 servers and HPE Synergy provides a list of error messages and information to assist with interpreting and resolving error messages.
- Error Message Guide for HPE ProLiant Gen10 Plus servers and HPE Synergy provides a list of error messages and information to assist with interpreting and resolving error messages.
- Integrated Management Log Messages and Troubleshooting Guide for HPE ProLiant Gen10 and Gen10 Plus servers and HPE Synergy provides IML messages and associated troubleshooting information to resolve critical and cautionary IML events.

To access troubleshooting resources for your product, see the Hewlett Packard Enterprise Information Library:

- For Gen10 servers, see **https://www.hpe.com/info/gen10-troubleshooting**.
- For Gen10 Plus servers, see **https://www.hpe.com/info/gen10plus-troubleshooting**.

Specifications

Environmental specifications

Specification	Value
Temperature range [1]	
Operating	10°C to 35°C (50°F to 95°F)
Shipping	-40°C to 70°C (-40°F to 158°F)
Maximum wet bulb temperature	28°C (82.4°F)
Relative humidity (noncondensing) [2]	
Operating	10% to 90%
Nonoperating	5% to 95%

[1] All temperature ratings shown are for sea level. An altitude derating of 1°C per 300 m (1.8°F per 1,000 ft) to 3,048 m (10,000 ft) is applicable. No direct sunlight allowed.
[2] Storage maximum humidity of 95% is based on a maximum temperature of 45°C (113°F). Altitude maximum for storage corresponds to a pressure minimum of 70 kPa.

Chassis specifications

Specification	Value
Height	17.58 cm (6.92 in)
Depth	92.76 cm (36.52 in)
Width	44.8 cm (17.64 in)
Weight (fully loaded)	105 kg (231 lbs)
Weight (empty)	61 kg (135 lbs)

Power supply specifications

Depending on installed options, the server is configured with one of the following power supplies:

- HPE 800W Flex Slot Platinum Hot-plug Low Halogen Power Supply
- HPE 800W Flex Slot -48VDC Hot-plug Low Halogen Power Supply
- HPE 800W Flex Slot Titanium Hot-plug Low Halogen Power Supply
- HPE 800W Flex Slot Universal Hot-plug Low Halogen Power Supply
- HPE 1600 W Flex Slot Platinum Hot-plug Low Halogen Power Supply

For detailed power supply specifications, see the QuickSpecs on the Hewlett Packard Enterprise website (**http://www.hpe.com/info/proliant/powersupply**).

HPE 800W Flex Slot Platinum Hot-plug Low Halogen Power Supply

Specification	Value
Input requirements	—
Rated input voltage	100 VAC to 127 VAC 200 VAC to 240 VAC 240 VDC for China only
Rated input frequency	50 Hz to 60 Hz Not applicable to 240 VDC
Rated input current	9.1 A at 100 VAC 4.4 A at 200 VAC 3.6 A at 240 VDC for China only
Maximum rated input power	899 W at 100 VAC 867 W at 200 VAC 864 W at 240 VDC for China only
BTUs per hour	3067 at 100 VAC 2958 at 200 VAC 2949 at 240 VAC for China only
Power supply output	—
Rated steady-state power	800 W at 100 VAC to 127 VAC input 800 W at 100 VAC to 240 VAC input 800 W at 240 VDC input for China only
Maximum peak power	800 W at 100 VAC to 127 VAC input 800 W at 100 VAC to 240 VAC input 800 W at 240 VDC input for China only

HPE 800W Flex Slot -48VDC Hot-plug Low Halogen Power Supply

Specification	Value
Input requirements	—
Rated input voltage	-40 VDC to -72 VDC -48 VDC nominal input
Rated input current	22.1 A at -40 VDC input 18.2 A at -48 VDC input, nominal input 12.0 A at -72 VDC input
Rated input power (W)	874 W at -40 VDC input 865 W at -48 VDC input, nominal input 854 W at -72 VDC input
Rated input power (BTUs per hour)	2983 at -40 VDC input 2951 at -48 VDC input, nominal input 2912 at -72 VDC input
Power supply output	—
Rated steady-state power (W)	800 W at -40 VDC to -72 VDC
Maximum peak power (W)	800 W at -40 VDC to -72 VDC
Maximum peak power	800 W at -40 VDC to -72 VDC input

WARNING: To reduce the risk of electric shock or energy hazards:

- This equipment must be installed by trained service personnel.
- Connect the equipment to a reliably grounded secondary circuit source. A secondary circuit has no direct connection to a primary circuit and derives its power from a transformer, converter, or equivalent isolation device.
- The branch circuit overcurrent protection must be rated 27 A.

CAUTION: This equipment is designed to permit the connection of the earthed conductor of the DC supply circuit to the earthing conductor at the equipment.

If this connection is made, all of the following must be met:

- This equipment must be connected directly to the DC supply system earthing electrode conductor or to a bonding jumper from an earthing terminal bar or bus to which the DC supply system earthing electrode conductor is connected.
- This equipment must be located in the same immediate area (such as adjacent cabinets) as any other equipment that has a connection between the earthed conductor of the same DC supply circuit and the earthing conductor, and also the point of earthing of the DC system. The DC system must be earthed elsewhere.
- The DC supply source is to be located within the same premises as the equipment.
- Switching or disconnecting devices must not be in the earthed circuit conductor between the DC source and the point of connection of the earthing electrode conductor.

HPE 800W Flex Slot Titanium Hot-plug Low Halogen Power Supply

Specification	Value
Input requirements	—
Rated input voltage	200 VAC to 240 VAC 240 VDC for China only
Rated input frequency	50 Hz to 60 Hz Not applicable to 240 VDC
Rated input current	4.35 A at 200 VAC 3.62 A at 240 VAC 3.62 A at 240 VDC for China only
Maximum rated input power	851 W at 200 VAC 848 W at 240 VAC

Specification	Value
	848 W at 240 VDC for China only
BTUs per hour	2905 at 200 VAC 2893 at 240 VAC 2893 at 240 VDC for China only
Power supply output	—
Rated steady-state power	800 W at 200 VAC to 240 VAC input 800 W at 240 VDC input for China only
Maximum peak power	800 W at 200 VAC to 240 VAC input 800 W at 240 VDC input for China only

HPE 800W Flex Slot Universal Hot-plug Low Halogen Power Supply

Specification	Value
Input requirements	—
Rated input voltage	200 VAC to 277 VAC 380 VDC
Rated input frequency	50 Hz to 60 Hz
Rated input current	4.4 A at 200 VAC 3.1 A at 277 VAC 2.3 A at 380 VDC
Maximum rated input power	869 W at 200 VAC 865 W at 230 VAC 861 W at 277 VAC 863 W at 380 VDC
BTUs per hour	2964 at 200 VAC 2951 at 230 VAC

Specification	Value
	2936 at 277 VAC 2943 at 380 VDC
Power supply output	—
Rated steady-state power	800 W at 200 VAC to 277 VAC input
Maximum peak power	800 W at 200 VAC to 277 VAC input

HPE 1600 W Flex Slot Platinum Hot-plug Low Halogen Power Supply

Specification	Value
Input requirements	—
Rated input voltage	200 VAC to 240 VAC 240 VDC for China only
Rated input frequency	50 Hz to 60 Hz
Rated input current	8.7 A at 200 VAC 7.2 A at 240 VAC
Maximum rated input power	1734 W at 200 VAC 1725 W at 240 VAC
BTUs per hour	5918 at 200 VAC 5884 at 240 VAC
Power supply output	—
Rated steady-state power	1600 W at 200 VAC to 240 VAC input 1600 W at 240 VDC input
Maximum peak power	2200 W for 1 ms (turbo mode) at 200 VAC to 240 VAC input

Hot-plug power supply calculations

For hot-plug power supply specifications and calculators to determine electrical and heat loading for the server, see the Hewlett Packard Enterprise Power Advisor website (**https://www.hpe.com/info/poweradvisor/online**).

Environmental considerations

Communications interference

Hewlett Packard Enterprise system compliance tests are conducted with Hewlett Packard Enterprise supported peripheral devices and shielded cables, such as those received with the system. The system meets interference requirements of all countries in which it is sold. These requirements provide reasonable protection against interference with radio and television communications.

Installing and using the system in strict accordance with Hewlett Packard Enterprise instructions minimizes the chances that the system might cause radio or television interference. However, Hewlett Packard Enterprise does not guarantee that the system does not interfere with radio and television reception.

Take these precautions:

- Use only shielded cables.
- Install and route the cables according to the instructions provided.
- Ensure that all cable connector screws are firmly tightened.
- Use only Hewlett Packard Enterprise supported peripheral devices.
- Before system operation, ensure that all panels and cover plates are in place and secure.

Electrostatic discharge

Preventing electrostatic discharge

To prevent damaging the system, be aware of the precautions you must follow when setting up the system or handling parts. A discharge of static electricity from a finger or other conductor may damage system boards or other static-sensitive devices. This type of damage may reduce the life expectancy of the device.

Procedure

- Avoid hand contact by transporting and storing products in static-safe containers.
- Keep electrostatic-sensitive parts in their containers until they arrive at static-free workstations.
- Place parts on a grounded surface before removing them from their containers.
- Avoid touching pins, leads, or circuitry.
- Always be properly grounded when touching a static-sensitive component or assembly.

Grounding methods to prevent electrostatic discharge

Several methods are used for grounding. Use one or more of the following methods when handling or installing electrostatic-sensitive parts:

- Use a wrist strap connected by a ground cord to a grounded workstation or computer chassis. Wrist straps are flexible straps with a minimum of 1 megohm ±10 percent resistance in the ground cords. To provide proper ground, wear the strap snug against the skin.
- Use heel straps, toe straps, or boot straps at standing workstations. Wear the straps on both feet when standing on conductive floors or dissipating floor mats.
- Use conductive field service tools.
- Use a portable field service kit with a folding static-dissipating work mat.

If you do not have any of the suggested equipment for proper grounding, have an authorized reseller install the part.

For more information on static electricity or assistance with product installation, contact the Hewlett Packard Enterprise Support Center.

Websites

General websites

Hewlett Packard Enterprise Information Library

www.hpe.com/info/EIL

Subscription Service/Support Alerts

www.hpe.com/support/e-updates

Insight Remote Support

www.hpe.com/info/insightremotesupport/docs

For additional websites, see Support and other resources.

Support and other resources

Accessing Hewlett Packard Enterprise Support

- For live assistance, go to the Contact Hewlett Packard Enterprise Worldwide website:

  https://www.hpe.com/info/assistance

- To access documentation and support services, go to the Hewlett Packard Enterprise Support Center website:

  https://www.hpe.com/support/hpesc

Information to collect

- Technical support registration number (if applicable)
- Product name, model or version, and serial number
- Operating system name and version
- Firmware version
- Error messages
- Product-specific reports and logs

- Add-on products or components
- Third-party products or components

Accessing updates

- Some software products provide a mechanism for accessing software updates through the product interface. Review your product documentation to identify the recommended software update method.
- To download product updates:

  Hewlett Packard Enterprise Support Center

  https://www.hpe.com/support/hpesc

  Hewlett Packard Enterprise Support Center: Software downloads

  https://www.hpe.com/support/downloads

  My HPE Software Center

  https://www.hpe.com/software/hpesoftwarecenter

- To subscribe to eNewsletters and alerts:

  https://www.hpe.com/support/e-updates

- To view and update your entitlements, and to link your contracts and warranties with your profile, go to the Hewlett Packard Enterprise Support Center **More Information on Access to Support Materials** page:

  https://www.hpe.com/support/AccessToSupportMaterials

> **IMPORTANT:**
> Access to some updates might require product entitlement when accessed through the Hewlett Packard Enterprise Support Center. You must have an HPE Passport set up with relevant entitlements.

Remote support

Remote support is available with supported devices as part of your warranty or contractual support agreement. It provides intelligent event diagnosis, and automatic, secure submission of hardware event notifications to Hewlett Packard Enterprise, which will initiate a fast and accurate resolution based on your product's service level. Hewlett Packard Enterprise strongly recommends that you register your device for remote support.

If your product includes additional remote support details, use search to locate that information.

Remote support and Proactive Care information

HPE Get Connected

https://www.hpe.com/services/getconnected

HPE Proactive Care services

https://www.hpe.com/services/proactivecare

HPE Datacenter Care services

https://www.hpe.com/services/datacentercare

HPE Proactive Care service: Supported products list

https://www.hpe.com/services/proactivecaresupportedproducts

HPE Proactive Care advanced service: Supported products list

https://www.hpe.com/services/proactivecareadvancedsupportedproducts

Proactive Care customer information

Proactive Care central

https://www.hpe.com/services/proactivecarecentral

Proactive Care service activation

https://www.hpe.com/services/proactivecarecentralgetstarted

Warranty information

To view the warranty information for your product, see the links provided below:

HPE ProLiant and IA-32 Servers and Options

https://www.hpe.com/support/ProLiantServers-Warranties

HPE Enterprise and Cloudline Servers

https://www.hpe.com/support/EnterpriseServers-Warranties

HPE Storage Products

https://www.hpe.com/support/Storage-Warranties

HPE Networking Products

https://www.hpe.com/support/Networking-Warranties

Regulatory information

To view the regulatory information for your product, view the Safety and Compliance Information for Server, Storage, Power, Networking, and Rack Products, available at the Hewlett Packard Enterprise Support Center:

https://www.hpe.com/support/Safety-Compliance-EnterpriseProducts

Additional regulatory information

Hewlett Packard Enterprise is committed to providing our customers with information about the chemical substances in our products as needed to comply with legal requirements such as REACH (Regulation EC No 1907/2006 of the European Parliament and the Council). A chemical information report for this product can be found at:

https://www.hpe.com/info/reach

For Hewlett Packard Enterprise product environmental and safety information and compliance data, including RoHS and REACH, see:

https://www.hpe.com/info/ecodata

For Hewlett Packard Enterprise environmental information, including company programs, product recycling, and energy efficiency, see:

https://www.hpe.com/info/environment

Documentation feedback

Hewlett Packard Enterprise is committed to providing documentation that meets your needs. To help us improve the documentation, send any errors, suggestions, or comments to Documentation Feedback

(**docsfeedback@hpe.com**). When submitting your feedback, include the document title, part number, edition, and publication date located on the front cover of the document. For online help content, include the product name, product version, help edition, and publication date located on the legal notices page.