Hewlett Packard Enterprise

HPE BladeSystem c-Class Enclosure

Getting Started Guide

Abstract

This document is for the person who installs, administers, and troubleshoots servers and storage systems. Hewlett Packard Enterprise assumes you are qualified in the servicing of computer equipment and trained in recognizing hazards in products with hazardous energy levels.

Part Number: 798294-002R
November 2015
Edition: 2

© Copyright 2014, 2015 Hewlett Packard Enterprise Development LP

The information contained herein is subject to change without notice. The only warranties for Hewlett Packard Enterprise products and services are set forth in the express warranty statements accompanying such products and services. Nothing herein should be construed as constituting an additional warranty. Hewlett Packard Enterprise shall not be liable for technical or editorial errors or omissions contained herein.

Contents

Overview 4
HPE Servers: Delivering confidence and reliability 4
Setup 5
Overview 5
Disassembling the enclosure 5
Rack-free installation 7
Installing a BladeSystem c-Class enclosure 8
Measuring with the rack template 8
Installing the rack rails 8
Installing the enclosure into the rack 9
Installing the rear cage into the enclosure 11
Installing server blade options 12
Installing interconnect modules 12
Interconnect bay numbering and device mapping 12
Connecting to the network 14
Installing a server blade 14
Completing the configuration 15
Specifications 16
Environmental specifications 16
Enclosure specifications 16
Server blade specifications 17
Troubleshooting 18
Troubleshooting resources 18
Support and other resources 19
Accessing Hewlett Packard Enterprise Support 19
Information to collect 19
Accessing updates 19
Websites 19
Remote support 20
Warranty and regulatory information 21
Warranty information 21
Regulatory information 21
Safety and regulatory compliance 21
Belarus Kazakhstan Russia marking 21
Turkey RoHS material content declaration 22
Ukraine RoHS material content declaration 22
Documentation feedback 23

Overview

HPE Servers: Delivering confidence and reliability

Hewlett Packard Enterprise delivers superior server choice that can reliably support any workload. Our commitment to focused innovation allows Hewlett Packard Enterprise Server customers to do more with less. We bring it all together through Hewlett Packard Enterprise services, support and consulting and a broad network of partners, delivering a world-class server experience to your business.

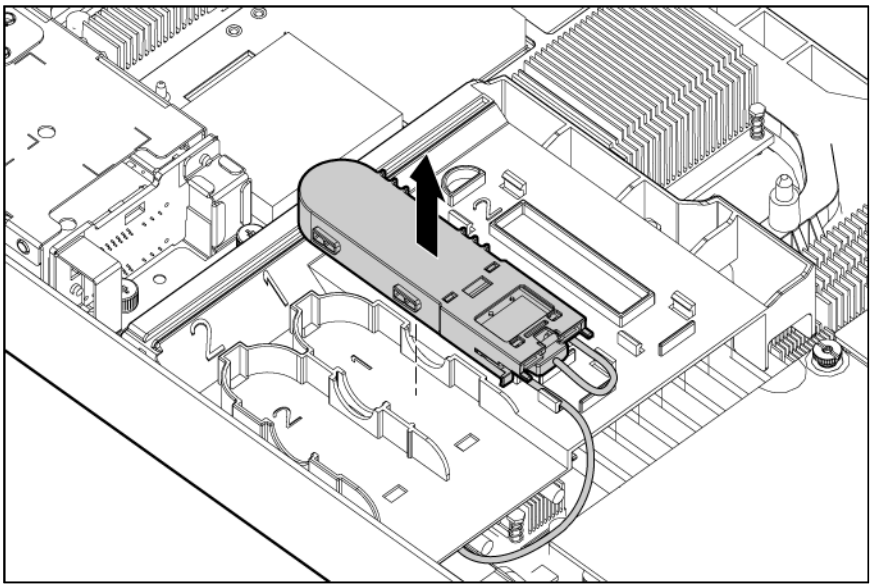

Setup

Overview

Installation of a server blade requires the following steps:

1. Install and configure a BladeSystem c-Class enclosure.
2. Install any server blade options.
3. Install interconnect modules in the enclosure.
4. Connect the interconnect modules to the network.
5. Install a server blade.
6. Complete the server blade configuration.

Disassembling the enclosure

Before installing the enclosure into the rack, you must disassemble the enclosure. Because a fully-populated enclosure can weigh up to 6.33 kg kg (13.96 lb lb), remove the components and the rear cage from the enclosure to make moving and installing the enclosure easier. Two people should work together to remove the rear cage from the enclosure.

The empty enclosure with the rear cage installed weighs 58.6 kg (129 lb). When the enclosure is disassembled, the empty enclosure without the rear cage installed weighs 35.5 kg (78 lb). The empty rear cage weighs 23.2 kg (51 lb).

1. With the enclosure still on the pallet, remove all components from the front and rear of the enclosure.

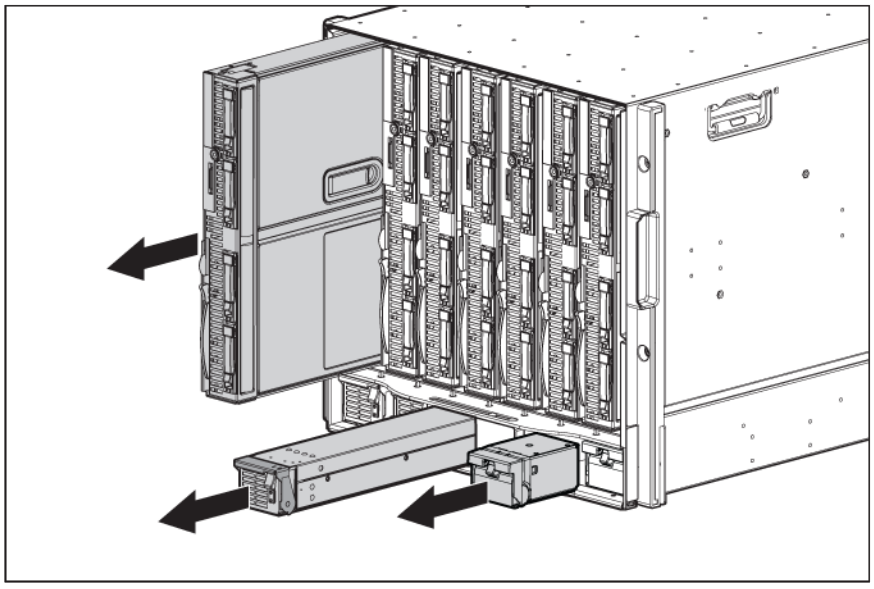

2. Remove the rear cage:
   a. Loosen the thumbscrews and open the hinges completely.

b. Use the handles to extend the rear cage until the release levers engage on both sides of the rear cage.

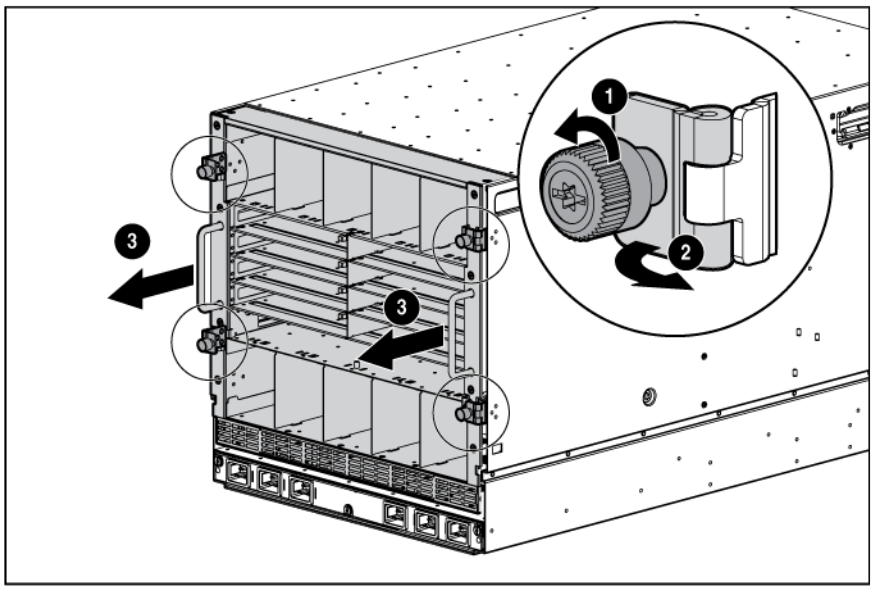

c. Grasp the handholds below the release levers.

d. Disengage the release levers on both sides of the rear cage.

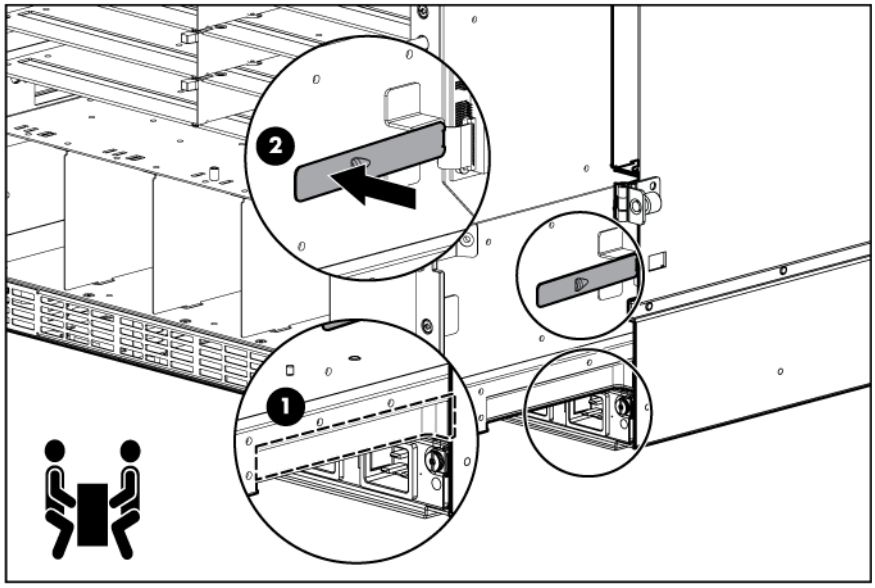

△ **CAUTION:** When removing and lifting the rear cage, always grasp the handholds as far forward as possible. The front end of the rear cage is heavy and the handholds provide a more balanced location to distribute the weight of the cage during lifting.

△ **CAUTION:** When removing the rear cage and midplane assembly, the connectors on the midplane assembly are susceptible to damage. Use caution to avoid damage to the pins and connectors.

e. Use the handholds to extend and remove the rear cage from the enclosure.

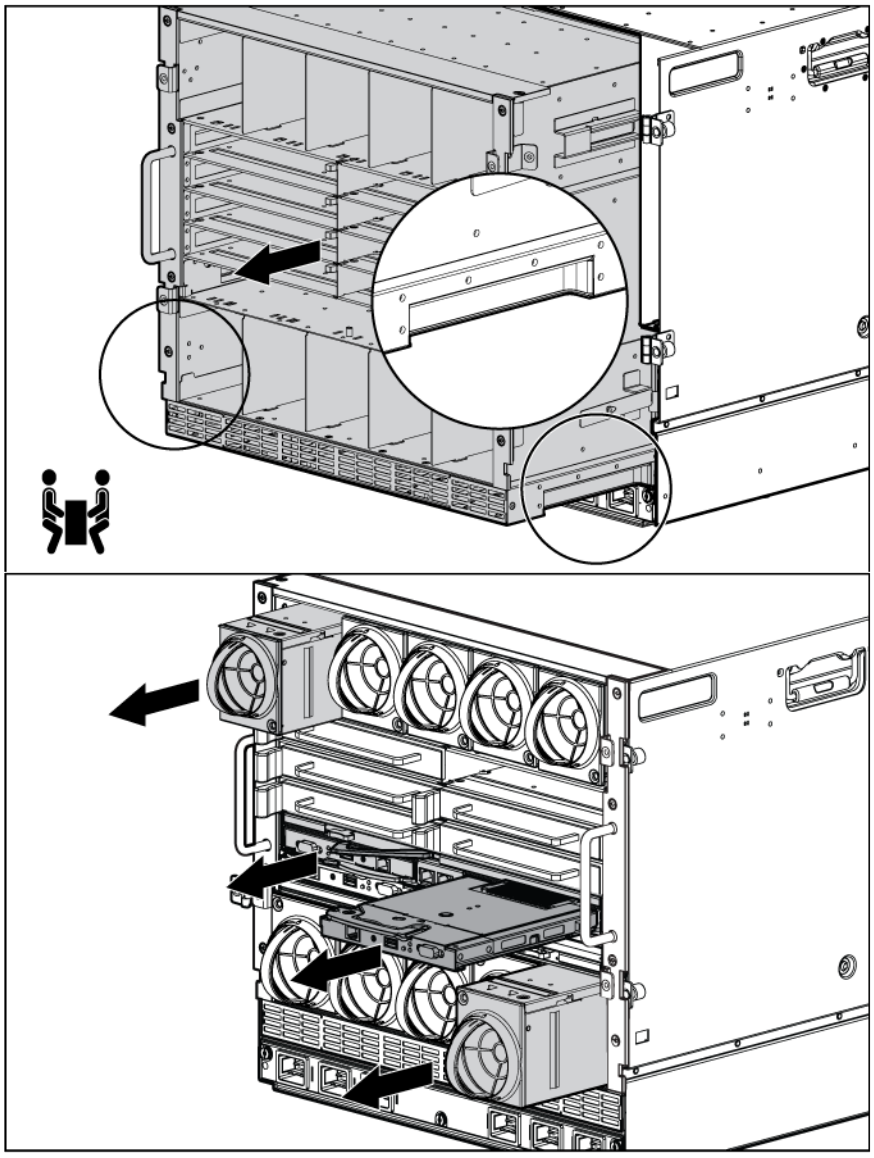

Rack-free installation

WARNING: To reduce the risk of personal injury or damage to the equipment in a rack-free environment:

- Never stack the enclosure on top of another enclosure.
- Never place equipment on top of the enclosure.
- Never place the enclosure on a surface that cannot support up to 6.33 kg kg (13.96 lb lb).

To set up the enclosure in a rack-free environment:

1. Select the location in which to set up the enclosure. For more information, see the site planning guide.
2. Disassemble the enclosure ("Disassembling the enclosure" on page 5).
3. Place the enclosure on a flat, sturdy surface to support the enclosure.
4. Install the rear cage into the enclosure. ("Installing the rear cage into the enclosure" on page 11)

Installing a BladeSystem c-Class enclosure

Before performing any server blade-specific procedures, install a BladeSystem c-Class enclosure.

The most current documentation for server blades and other BladeSystem components is available at the Hewlett Packard Enterprise website (http://www.hpe.com/support/BladeSystem/docs).

Measuring with the rack template

The rack template ships with the rack rail kit and provides detailed instructions on where to position the enclosure rack rails and where to install the four cage or clip nuts. Each enclosure kit includes the rack rails recommended for that enclosure.

NOTE: Four cage nuts and four clip nuts are included with the enclosure. Cage nuts should be used in racks with square holes. Clip nuts should be used in racks with round holes.

When installing multiple enclosures, install the rack rails and cage or clip nuts for one enclosure, and then install the enclosure. Repeat for each additional enclosure.

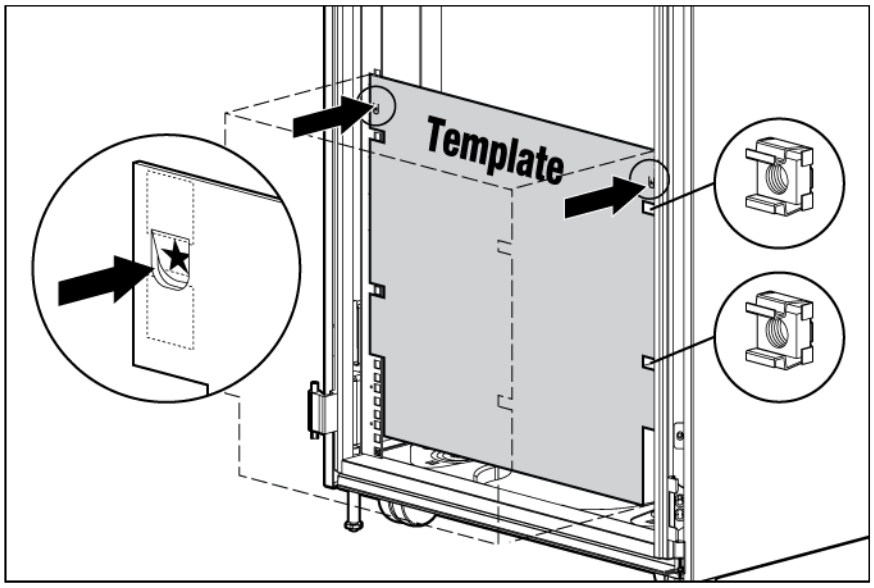

Installing the rack rails

The rack rails are marked for easy identification. The left rack rail is marked "L" and the right rack rail is marked "R."

To install the rack rails:

1. Begin with the left rack rail. Align the end of the rail with the rear rack column.
2. Slide the rack rail closed until the end of the rail is locked in place, wrapping behind the rear rack column.

3. Slide the front end of the rail to the rack front column. When fully seated, the rack rail will lock into place.

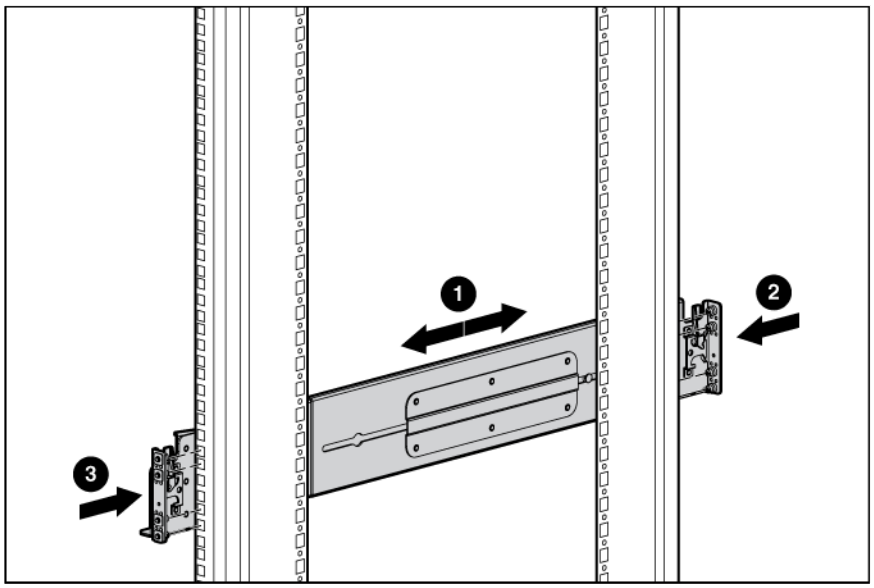

4. Repeat the procedure for the right rack rail.

Installing the enclosure into the rack

The empty enclosure with the rear cage installed weighs 58.6 kg (129 lb). When the enclosure is disassembled, the empty enclosure without the rear cage installed weighs 35.5 kg (78 lb). The empty rear cage weighs 23.2 kg (51 lb).

WARNING: Always use at least two people to lift an enclosure into the rack. If the enclosure is being loaded into the rack above chest level, a third person must assist with aligning the enclosure with the rails while the other two people support the weight of the enclosure.

To install the enclosure into the rack:

1. At the front of the rack, lift and align the enclosure guiding fins with the guiding groove in the rack rails.

IMPORTANT: Be sure that the guiding fins on the enclosure seat properly in the guiding groove on the rack rail.

2. Push the handles down on each side of the enclosure, and slide the enclosure fully into the rack.

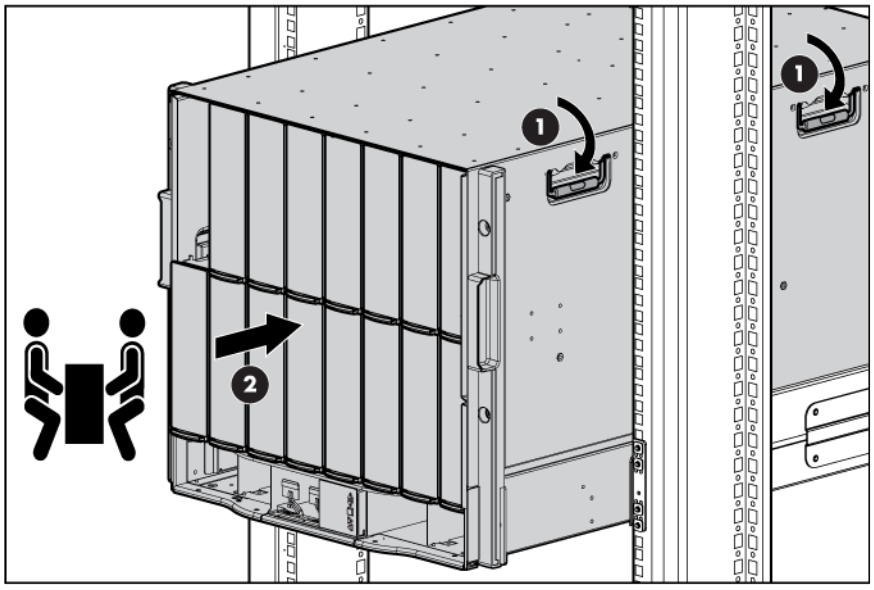

3. Tighten the thumbscrews to secure the enclosure to the rack.

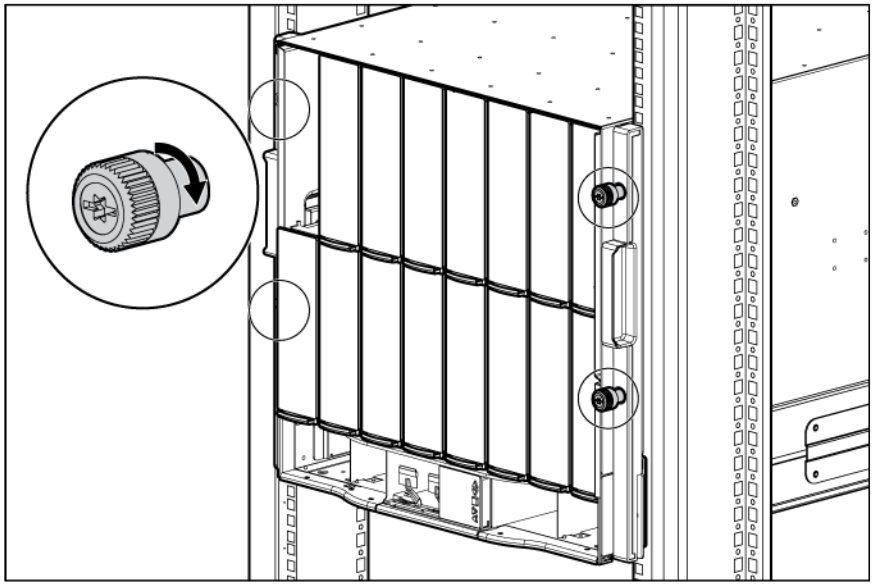

4. Install the rear cage into the enclosure. ("Installing the rear cage into the enclosure" on page 11)
5. Repeat the procedure for the remaining enclosures.

NOTE: Up to four 10U enclosures can be installed in a 42U rack. If you are installing more than one enclosure, install the first enclosure in the bottom of the rack, and then install additional enclosures by moving up the rack with each subsequent enclosure. Plan rack installation carefully because it is difficult to change the location of components after they are installed.

Installing the rear cage into the enclosure

1. Open all hinges completely.

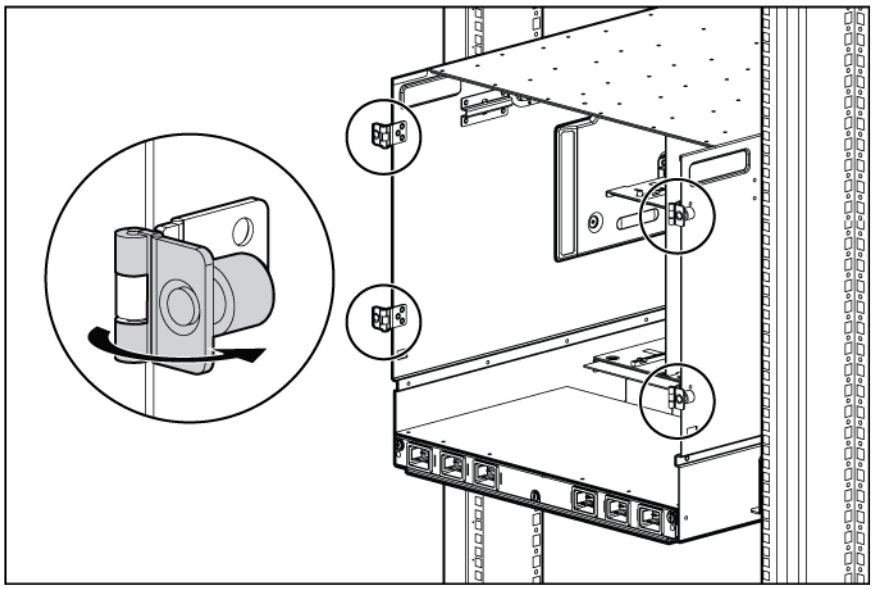

2. Position the rear cage at the rear of the enclosure, and align the rear cage guiding fins with the guiding groove in the rack rails.
3. Slide the rear cage fully into the enclosure.

> △ **CAUTION:** Do not touch or bump rear cage connector pins when installing the rear cage into the enclosure.

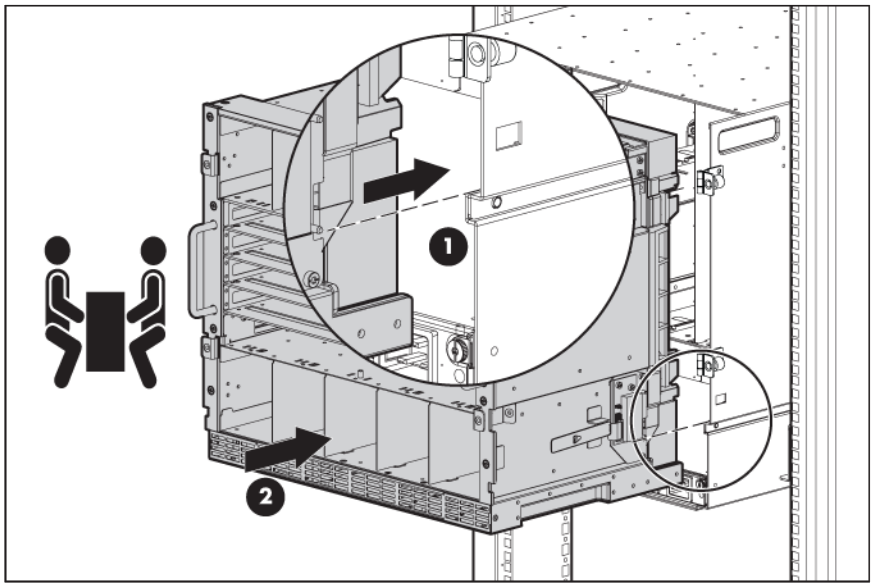

4. Close the hinges, and tighten the thumbscrews to secure the rear cage.

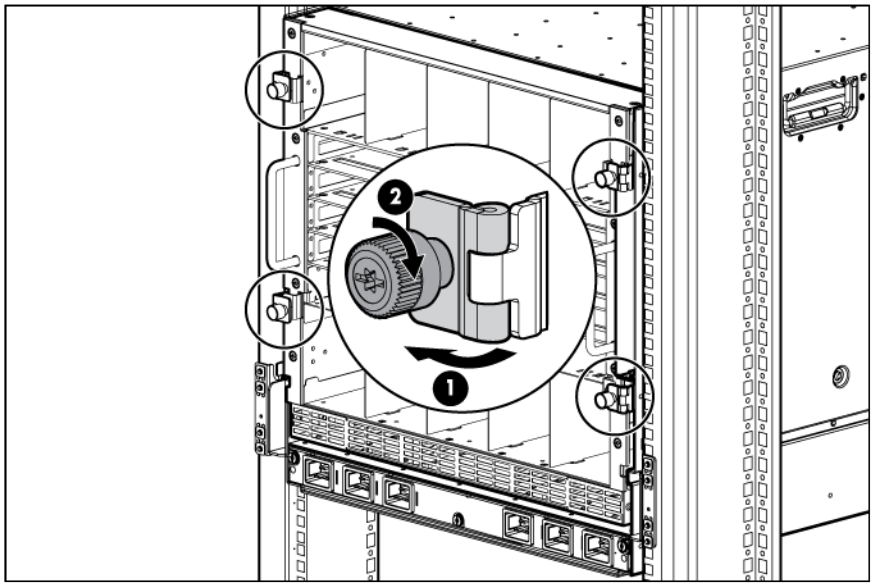

Installing server blade options

Before installing and initializing the server blade, install any server blade options, such as an additional processor, hard drive, or mezzanine card. For server blade options installation information, see the *HPE ProLiant BL460c Gen9 Server Blade User Guide* in the HPE ProLiant BL460c Gen9 Server Blade Information Library (http://www.hpe.com/support/BL460cGen9/docs).

Installing interconnect modules

For specific steps to install interconnect modules, see the documentation that ships with the interconnect module.

Interconnect bay numbering and device mapping

- BladeSystem c7000 Enclosure

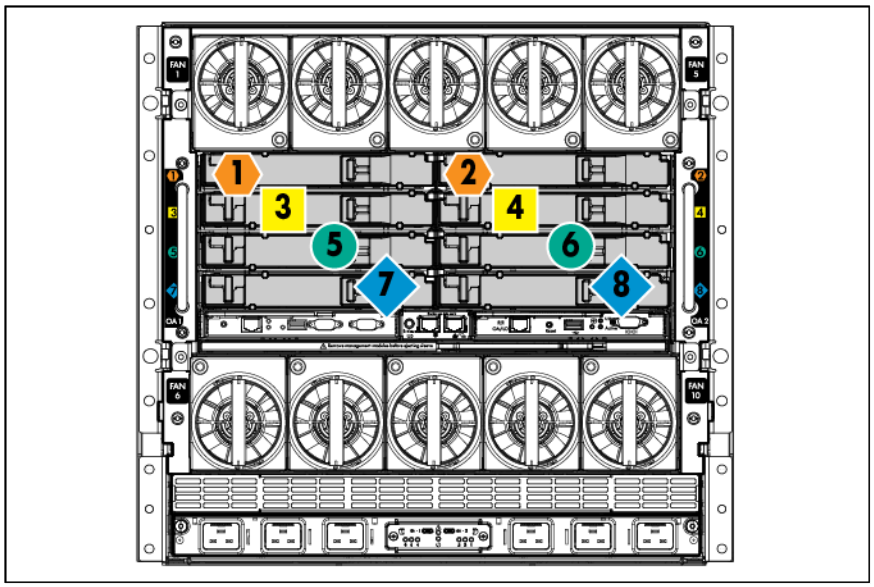

To support network connections for specific signals, install an interconnect module in the bay corresponding to the FlexibleLOM or mezzanine signals.

Server blade signal	Interconnect bay	Interconnect bay labels
FlexibleLOM	1 and 2	⬢
Mezzanine 1	3 and 4	■
Mezzanine 2	5 and 6	●
	7 and 8	◆

For detailed port mapping information, see the BladeSystem enclosure installation poster or the BladeSystem enclosure setup and installation guide on the Hewlett Packard Enterprise website (http://www.hpe.com/info/bladesystem/documentation).

- BladeSystem c3000 Enclosure and Tower Enclosure

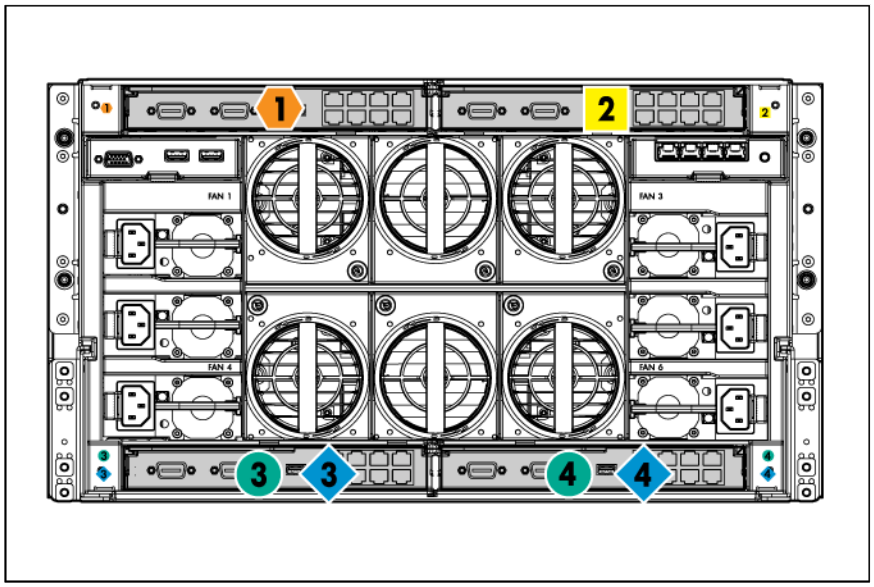

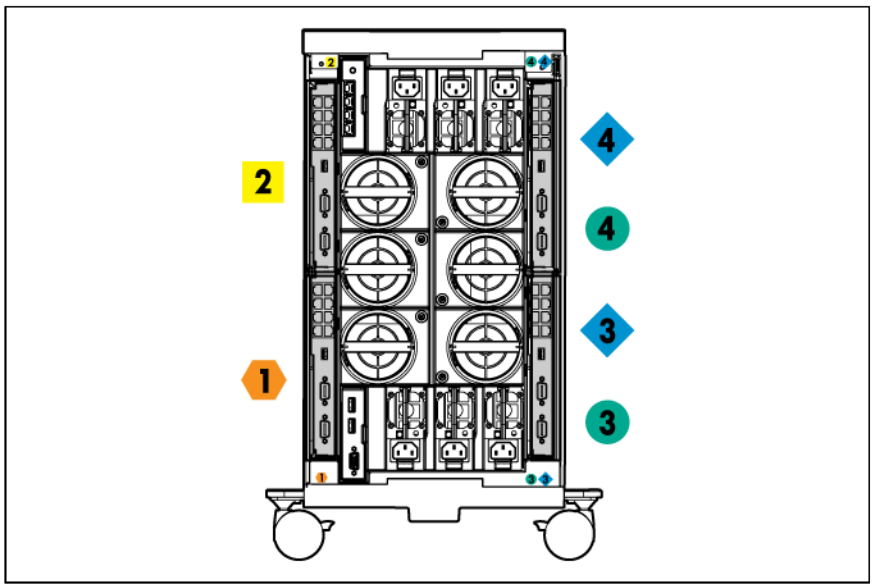

Server blade signal	Interconnect bay number	Interconnect bay label	Notes
FlexibleLOM	1		—
Mezzanine 1	2		Four port cards connect to bay 2.
Mezzanine 2	3 and 4		• Four port cards • Ports 1 and 3 connect to bay 3. • Ports 2 and 4 connect to bay 4.

Connecting to the network

To connect the BladeSystem to a network, each enclosure must be configured with network interconnect devices to manage signals between the server blades and the external network.

Two types of interconnect modules are available for BladeSystem c-Class enclosures: Pass-Thru modules and switch modules. For more information about interconnect module options, see the Hewlett Packard Enterprise website (http://www.hpe.com/info/bladesystem/interconnects).

IMPORTANT: To connect to a network with a Pass-Thru module, always connect the Pass-Thru module to a network device that supports Gigabit or 10 Gb speed, depending on the corresponding Pass-Thru model.

Installing a server blade

CAUTION: To prevent improper cooling and thermal damage, do not operate the server blade enclosure unless all bays are populated with either a component or a blank.

CAUTION: Failure to install the divider in a quadrant when installing half-height blades can result in damage to the connectors on the server blades.

For the best possible BladeSystem and Virtual Connect experience, and to prevent a future reboot, Hewlett Packard Enterprise requires updating the Onboard Administrator and Virtual Connect to the correct version before installing an ProLiant Gen9 server blade. The version information is located on the tag on the front of the server blade.

For more information on this and other specific firmware and driver requirements, as well as the latest firmware and driver versions, download the SPP on the Hewlett Packard Enterprise website (http://www.hpe.com/servers/spp/download).

1. Remove the device bay blank.

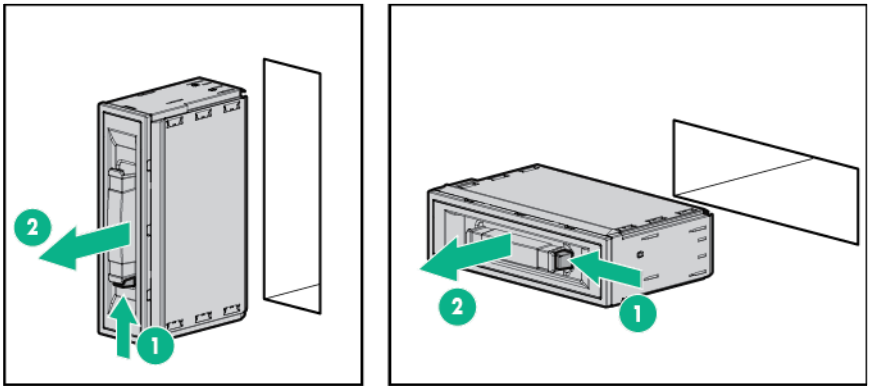

2. Remove the enclosure connector cover.

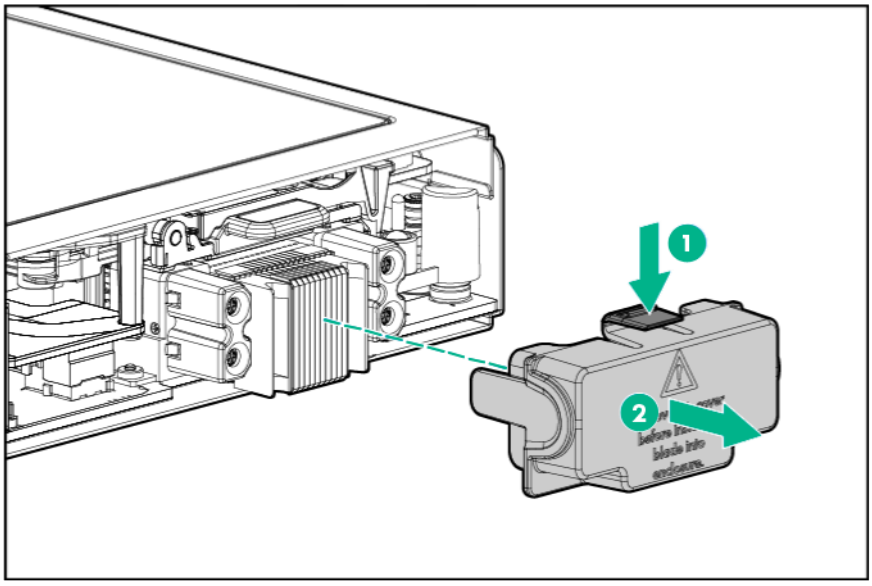

3. Install the server blade.

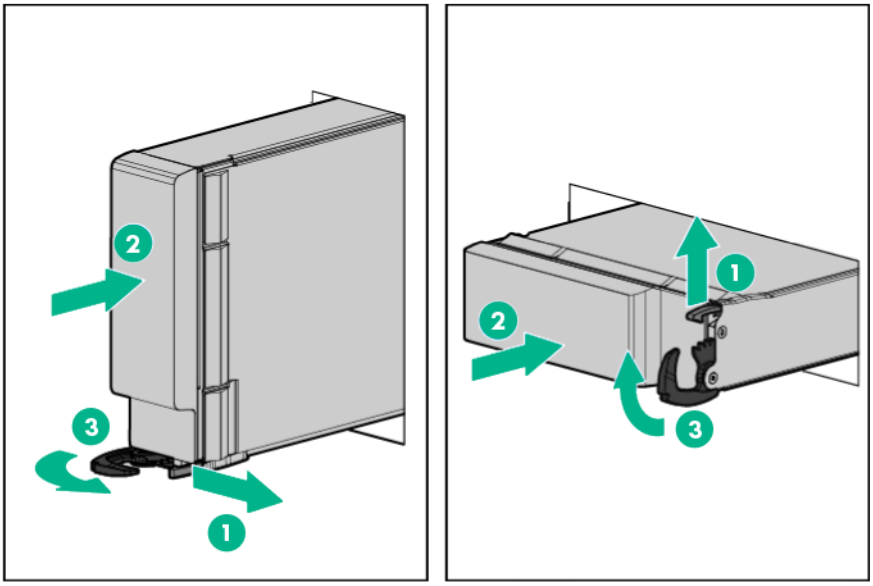

Completing the configuration

To complete the server blade and BladeSystem configuration, see the overview card that ships with the enclosure.

Specifications

Environmental specifications

Specification	Value
Temperature range*	—
Operating	10°C to 35°C (50°F to 95°F)
Non-operating	-30°C to 60°C (-22°F to 140°F)
Relative humidity (noncondensing)**	—
Operating	10% to 90% @ 28°C (82.4°F)
Non-operating	5% to 95% @ 38.7°C (101.7°F)
Altitude†	—
Operating	3050 m (10,000 ft)
Non-operating	9144 m (30,000 ft)

* The following temperature conditions and limitations apply:
  - All temperature ratings shown are for sea level.
  - An altitude derating of 1°C per 304.8 m (1.8°F per 1,000 ft) up to 3048 m (10,000 ft) applies.
  - No direct sunlight is allowed.
  -The maximum permissible rate of change is 10°C/hr (18°F/hr).
  - The type and number of options installed may reduce the upper temperature and humidity limits.
  - Operating with a fan fault or above 30°C (86°F) may reduce system performance.

** Storage maximum humidity of 95% is based on a maximum temperature of 45°C (113°F).

†Maximum storage altitude corresponds to a minimum pressure of 70 kPa (10.1 psia).

Enclosure specifications

The BladeSystem c-Class System supports two types of enclosure.

- BladeSystem c3000 Enclosure

Specification	Value
Product dimensions	
Height	264.50 mm (10.42 in)
Depth	835.00 mm (32.88 in)
Width	485.00 mm (19.10 in)
Shipping dimensions	
Height	584.00 mm (23.00 in)
Depth	1013.00 mm (39.88 in)
Width	607.00 mm (23.88 in)
Standard enclosure weight *	
Unboxed	65.80 kg (145.00 lb)
Shipping	88.50 kg (195.00 lb)
Maximum enclosure weight	
Unboxed	136.00 kg (300.00 lb)
Shipping	158.80 kg (350.00 lb)

* Includes two power supplies, four fans, and one Onboard Administrator.

- BladeSystem c7000 Enclosure

Specification	Value
Product dimensions	
Height	442.0 mm (17.4 in)
Depth	813.0 mm (32.0 in)
Width	447.0 mm (17.6 in)
Shipping dimensions	
Height	759.00 mm (29.88 in)
Depth	1013.00 mm (39.88 in)
Width	607.00 mm (23.88 in)
Single-phase enclosure weight*	
Unboxed	54.9 kg (121.0 lb)
Shipping	74.4 kg (164.0 lb)
Three-phase enclosure weight*	
Unboxed	68.0 kg (150.0 lb)
Shipping	87.5 kg (193.0 lb)
Maximum enclosure weight	
Unboxed	204.0 kg (450.0 lb)
Shipping	223.6 kg (493.0 lb)

* No components installed.

Server blade specifications

The c-Class BladeSystem supports two types of server blades. The following tables provide the specifications for each type of server blade:

- Half-height server blades

Specification	Value
Height	180.70 mm (7.11 in)
Depth	517.51mm (20.37 in)
Width	55.37 mm (2.18 in)
Weight (maximum)	6.33 kg (13.96 lb)
Weight (minimum)	4.50 kg (9.90 lb)

- Full-height server blades

Specification	Value
Height	5.08 cm (2.00 in)
Depth	50.65 cm (19.94 in)
Width	36.68 cm (14.44 in)
Weight (maximum)	4.50 kg (9.90 lb)
Weight (minimum)	6.33 kg (13.96 lb)

Troubleshooting

Troubleshooting resources

The *ProLiant Gen8 Troubleshooting Guide, Volume I: Troubleshooting* provides procedures for resolving common problems and comprehensive courses of action for fault isolation and identification, issue resolution, and software maintenance on ProLiant servers and server blades. To view the guide, select a language:

- English (http://www.hpe.com/support/Gen9_TSG_en)
- French (http://www.hpe.com/support/Gen9_TSG_fr)
- Spanish (http://www.hpe.com/support/Gen9_TSG_es)
- German (http://www.hpe.com/support/Gen9_TSG_de)
- Japanese (http://www.hpe.com/support/Gen9_TSG_ja)
- Simplified Chinese (http://www.hpe.com/support/Gen9_TSG_zh_cn)

The *ProLiant Gen8 Troubleshooting Guide, Volume II: Error Messages* provides a list of error messages and information to assist with interpreting and resolving error messages on ProLiant servers and server blades. To view the guide, select a language:

- English (http://www.hpe.com/support/Gen9_EMG_en)
- French (http://www.hpe.com/support/Gen9_EMG_fr)
- Spanish (http://www.hpe.com/support/Gen9_EMG_es)
- German (http://www.hpe.com/support/Gen9_EMG_de)
- Japanese (http://www.hpe.com/support/Gen9_EMG_ja)
- Simplified Chinese (http://www.hpe.com/support/Gen9_EMG_zh_cn)

Support and other resources

Accessing Hewlett Packard Enterprise Support

- For live assistance, go to the Contact Hewlett Packard Enterprise Worldwide website (http://www.hpe.com/assistance).
- To access documentation and support services, go to the Hewlett Packard Enterprise Support Center website (http://www.hpe.com/support/hpesc).

Information to collect

- Technical support registration number (if applicable)
- Product name, model or version, and serial number
- Operating system name and version
- Firmware version
- Error messages
- Product-specific reports and logs
- Add-on products or components
- Third-party products or components

Accessing updates

- Some software products provide a mechanism for accessing software updates through the product interface. Review your product documentation to identify the recommended software update method.
- To download product updates, go to either of the following:
  - Hewlett Packard Enterprise Support Center **Get connected with updates** page (http://www.hpe.com/support/e-updates)
  - Software Depot website (http://www.hpe.com/support/softwaredepot)
- To view and update your entitlements, and to link your contracts and warranties with your profile, go to the Hewlett Packard Enterprise Support Center **More Information on Access to Support Materials** page (http://www.hpe.com/support/AccessToSupportMaterials).



IMPORTANT: Access to some updates might require product entitlement when accessed through the Hewlett Packard Enterprise Support Center. You must have an HP Passport set up with relevant entitlements.

Websites

- Hewlett Packard Enterprise Information Library (http://www.hpe.com/info/enterprise/docs)
- Hewlett Packard Enterprise Support Center (http://www.hpe.com/support/hpesc)
- Contact Hewlett Packard Enterprise Worldwide (http://www.hpe.com/assistance)

- Subscription Service/Support Alerts (http://www.hpe.com/support/e-updates)
- Software Depot (http://www.hpe.com/support/softwaredepot)
- Customer Self Repair (http://www.hpe.com/support/selfrepair)
- Insight Remote Support (http://www.hpe.com/info/insightremotesupport/docs)
- Serviceguard Solutions for HP-UX (http://www.hpe.com/info/hpux-serviceguard-docs)
- Single Point of Connectivity Knowledge (SPOCK) Storage compatibility matrix (http://www.hpe.com/storage/spock)
- Storage white papers and analyst reports (http://www.hpe.com/storage/whitepapers)

Remote support

Remote support is available with supported devices as part of your warranty or contractual support agreement. It provides intelligent event diagnosis, and automatic, secure submission of hardware event notifications to Hewlett Packard Enterprise, which will initiate a fast and accurate resolution based on your product's service level. Hewlett Packard Enterprise strongly recommends that you register your device for remote support.

For more information and device support details, go to the Insight Remote Support website (http://www.hpe.com/info/insightremotesupport/docs).

Warranty and regulatory information

Warranty information

HPE ProLiant and x86 Servers and Options (http://www.hpe.com/support/ProLiantServers-Warranties)

HPE Enterprise Servers (http://www.hpe.com/support/EnterpriseServers-Warranties)

HPE Storage Products (http://www.hpe.com/support/Storage-Warranties)

HPE Networking Products (http://www.hpe.com/support/Networking-Warranties)

Regulatory information

Safety and regulatory compliance

For important safety, environmental, and regulatory information, see *Safety and Compliance Information for Server, Storage, Power, Networking, and Rack Products*, available at the Hewlett Packard Enterprise website (http://www.hpe.com/support/Safety-Compliance-EnterpriseProducts).

Belarus Kazakhstan Russia marking



Manufacturer and Local Representative Information

Manufacturer information:

Hewlett Packard Enterprise Company, 3000 Hanover Street, Palo Alto, CA 94304 U.S.

Local representative information Russian:

- **Russia:**

  ООО «Хьюлетт Паккард Энтерпрайз», Российская Федерация, 125171, г. Москва, Ленинградское шоссе, 16А, стр.3, Телефон/факс: +7 495 797 35 00

- **Belarus:**

  ИООО «Хьюлетт-Паккард Бел», Республика Беларусь, 220030, г. Минск, ул. Интернациональная, 36-1, Телефон/факс: +375 17 392 28 20

- **Kazakhstan:**

  ТОО «Хьюлетт-Паккард (К)», Республика Казахстан, 050040, г. Алматы, Бостандыкский район, проспект Аль-Фараби, 77/7, Телефон/факс: + 7 727 355 35 52

Local representative information Kazakh:

- **Russia:**

  ЖШС "Хьюлетт Паккард Энтерпрайз", Ресей Федерациясы, 125171,
  Мәскеу, Ленинград тас жолы, 16А блок 3, Телефон/факс: +7 495 797 35 00

- **Belarus:**

  «HEWLETT-PACKARD Bel» ЖШС, Беларусь Республикасы, 220030, Минск қ.,
  Интернациональная көшесі, 36/1, Телефон/факс: +375 17 392 28 20

- **Kazakhstan:**

  ЖШС «Хьюлетт-Паккард (К)», Қазақстан Республикасы, 050040, Алматы к.,
  Бостандық ауданы, Әл-Фараби даңғ ылы, 77/7, Телефон/факс: +7 727 355 35 52

Manufacturing date:

The manufacturing date is defined by the serial number.

CCSYWWZZZZ (serial number format for this product)

Valid date formats include:

- YWW, where Y indicates the year counting from within each new decade, with 2000 as the starting point; for example, 238: 2 for 2002 and 38 for the week of September 9. In addition, 2010 is indicated by 0, 2011 by 1, 2012 by 2, 2013 by 3, and so forth.
- YYWW, where YY indicates the year, using a base year of 2000; for example, 0238: 02 for 2002 and 38 for the week of September 9.

Turkey RoHS material content declaration

Türkiye Cumhuriyeti: EEE Yönetmeliğine Uygundur

Ukraine RoHS material content declaration

Обладнання відповідає вимогам Технічного регламенту щодо обмеження використання деяких небезпечних речовин в електричному та електронному обладнанні, затвердженого постановою Кабінету Міністрів України від 3 грудня 2008 № 1057

Documentation feedback

Hewlett Packard Enterprise is committed to providing documentation that meets your needs. To help us improve the documentation, send any errors, suggestions, or comments to Documentation Feedback (mailto:docsfeedback@hpe.com). When submitting your feedback, include the document title, part number, edition, and publication date located on the front cover of the document. For online help content, include the product name, product version, help edition, and publication date located on the legal notices page.