HPE Compute Security Reference Guide

Part Number: 30-2905B658-019
Published: July 2026
Edition: 19

HPE Compute Security Reference Guide

Abstract

This document describes security features supported by Hewlett Packard Enterprise Gen10 and later servers and compute modules with HPE iLO 5, HPE iLO 6, and HPE iLO 7. This document is for individuals who are responsible for the secure configuration and operation of HPE servers and compute modules.

Part Number: 30-2905B658-019
Published: July 2026
Edition: 19

© Copyright 2017-2026 Hewlett Packard Enterprise Development LP

Notices

The information provided here is subject to change without notice. Hewlett Packard Enterprise's products and services are covered only by the express warranty statements that come with them. This document does not constitute an additional warranty. Hewlett Packard Enterprise is not responsible for any technical or editorial errors or omissions in this document.

Confidential computer software. You must have a valid license from Hewlett Packard Enterprise to possess, use, or copy the software. In accordance with FAR 12.211 and 12.212, Commercial Computer Software, Computer Software Documentation, and Technical Data for Commercial Items are licensed to the U.S. Government under the vendor's standard commercial license.

Links to third-party websites will take you outside of the Hewlett Packard Enterprise website. Hewlett Packard Enterprise has no control over and is not responsible for the information outside the Hewlett Packard Enterprise website.

Acknowledgments

AMD is a trademark of Advanced Micro Devices, Inc.

Ampere® is a registered trademark of Ampere Computing.

Intel® is a trademark of Intel Corporation in the U.S. and other countries.

Microsoft® and Windows® are either registered trademarks or trademarks of Microsoft Corporation in the United States and/or other countries.

SAS® is a registered trademark or trademark of SAS Institute, Inc.

VMware® is a registered trademark of VMware, Inc. and its subsidiaries in the United States and other jurisdictions.

All third-party marks are property of their respective owners.

Revision history

Part number	Publication date	Edition	Summary of changes
30-2905B658-019	July 2026	19	• Added information about Automatic certificate enrollment. • Added information about Key management interoperability protocol. • Added information about various HPE OneView security features. • Added links to various HPE iLO technical whitepapers. • Added information about Intel Boot Guard.
30-2905B658-018	May 2026	18	• Updated Network settings and ports used by iLO. • Updated information about the HPE Compute Ops Management plug-in for VMware vCenter. • Added minor updates to the Compute Ops Management security FAQ section.
30-2905B658-017	February 2026	17	Added Receiving an HPE Trusted Supply Chain server.
30-2905B658-016	October 2025	16	• Updated the Security resources topic. • Updated HPE Compute Ops Management secure gateway feature list.

Table of contents

HPE Compute security features....8
Supply chain security....8
HPE Trusted Supply Chain....9
HPE Trusted Supply Chain server configuration....9
HPE Server Security Optimized Service for HPE ProLiant....11
Receiving an HPE Trusted Supply Chain server....12
Server Configuration Lock....12
Chassis intrusion detection switch....13
Platform certificates....14
HPE Platform Certificate Verification Tool....14
Zero trust security....15
Silicon root of trust....15
Secure boot....20
SPDM authentication....20
SPDM supported algorithms....21
Server identity....23
802.1X and iLO....25
Trusted Platform Module....26
Unauthorized access prevention....26
Persistence-enabled attack protection....28
iLO firewall for system ROM and iLO firmware....29
Physical access security....29
System maintenance switch....30
Reasons to disable iLO security....31
USB security....32
iLO Service Port....33
Rack and power security....33
Bezel lock....34
Cloud-based management....34
HPE Compute Ops Management security features....35
Compute Ops Management security FAQ....39
General....39
Processing of personal data....40
Data and data access....43

Regulations compliance governance ... 45
Business continuity ... 46
Authentication ... 47
Connectivity ... 47
iLO server management features ... 48
iLO security guidelines ... 49
Network settings and ports used by iLO ... 51
Access control for features, ports, and protocols ... 54
iLO network connection options ... 54
Virtual LAN ... 56
Network and management ports ... 57
SSH keys ... 57
SSL certificates ... 58
Guidelines for using iLO with IPMI or DCMI over LAN ... 59
Automatic certificate enrollment ... 60
Security dashboard ... 60
Causes of security risk status ... 61
Security audits ... 63
Security Log ... 63
Remote console security ... 64
iLO encryption settings ... 64
iLO security states ... 65
Connecting to iLO when using CNSA mode ... 68
iLO 5 SSH cipher, key exchange, and MAC support ... 68
iLO 6 SSH cipher, key exchange, and MAC support ... 69
iLO 7 SSH cipher, key exchange, and MAC support ... 70
iLO 5 and iLO 6 SSL cipher and MAC support ... 71
iLO 7 SSL cipher and MAC support ... 73
FIPS validation and Common Criteria certification ... 75
Key management interoperability protocol ... 75
Kerberos authentication with iLO ... 76
Schema-free directory authentication ... 76
HPE Extended Schema directory authentication ... 78
Directory services support ... 78
Firmware verification ... 78
System Recovery Set ... 79
iLO backup and restore ... 80
Security vulnerability scanners and iLO ... 81

Technical Whitepapers....83
UEFI System Utilities server management features....83
Power-on password....84
Administrator password....84
HTTPS boot....85
Trusted platform module options....85
Advanced BIOS and platform security options....85
Encryption and key management....86
Server lifecycle decommission or repurpose....88
One-button secure erase....89
One-button secure erase FAQ....91
System Erase and Reset....95
HPE OneView security....96
HPE OneView Security features....97
HPE OneView Audit log....98
HPE OneView certificate....100
Complex passwords....100
Two-factor authentication....101
Algorithms and protocols for securing the appliance....101
Directory service authentication....103
Firewall ports required for HPE OneView....103
Best practices for maintaining a secure appliance....105
HPE and third-party security solutions....109
Microsoft Secured-core server support....110
AMD memory encryption....110
Intel Software Guard Extensions....111
Intel Trusted Execution Technology....111
Intel processor AES-NI support....111
Pensando Distributed Services Platform....112
Recommended security settings....112
Password guidelines....112
Recommended security settings for iLO....113
UEFI System Utilities security setting recommendations....117
Security resources....119
Support and other resources....120
Accessing Hewlett Packard Enterprise Support....121
HPE product registration....121
Accessing updates....122

Remote support 122
Warranty information 123
Regulatory information 123
Documentation feedback 124

HPE Compute security features

Provides an overview of server security capabilities that help protect hardware, firmware, and management operations.

Hewlett Packard Enterprise Compute security features are designed to meet security challenges by continually improving the hardware and firmware security of HPE servers and related hardware environments. The security features ensure that every link in the chain of security provides effective protection.

The features described in this guide might not be supported by every product. To verify feature support for your product, see the **product documentation** or **QuickSpecs**.

Compute Ops Management

Compute has evolved into a distributed service that enables digital transformation and is available everywhere. But legacy management tools are complex and error prone. Compute Ops Management helps you to secure, automate, and unify compute management.

You can use Compute Ops Management to manage the full lifecycle of your entire compute environment with a single, as-a-service experience.

For more information, see Cloud-based management.

iLO licensed features

iLO (Standard) is preconfigured on HPE servers without an additional cost or license. Some features that enhance security and productivity require an iLO Advanced license. In addition to features you can manage through the iLO web interface, command line, and scripting tools, an iLO Advanced license enables features such as Server Configuration Lock and Smart Array Secure Encryption. For more information, see the iLO licensing guide (**https://www.hpe.com/support/hpeilodocs-quicklinks**).

Supply chain security

Provides protections that help verify system integrity and detect tampering before deployment.

Hewlett Packard Enterprise server security starts with the supply chain and extends throughout the product life cycle.

Subtopics

HPE Trusted Supply Chain
Server Configuration Lock
Chassis intrusion detection switch
Platform certificates

HPE Platform Certificate Verification Tool

HPE Trusted Supply Chain

The HPE Trusted Supply Chain provides a first line of defense against cyber attackers with supported servers built to heightened security standards in secured facilities. HPE Trusted Supply Chain combines security, processes, and people to deliver protection for the most sensitive applications and data even before the server is deployed.

- HPE Trusted Supply Chain server configuration—Add this service to supported servers to ensure that your server is built with the highest security standards in a secured facility in the USA.
- HPE Server Security Optimized Service for HPE ProLiant—Add this service to supported servers to ensure that your server is hardened by turning on advanced safeguards against cyber-exploits throughout the server life cycle.

Subtopics

HPE Trusted Supply Chain server configuration
HPE Server Security Optimized Service for HPE ProLiant
Receiving an HPE Trusted Supply Chain server

HPE Trusted Supply Chain server configuration

Servers with the HPE Trusted Supply Chain configuration ship with the following characteristics:

Country of origin USA

Built in secure Hewlett Packard Enterprise facilities in the USA, with conformance requirements, each server is inspected and verified to be free from malicious microcode and counterfeit parts, safeguarding it against cyber-exploits throughout its life cycle.

Hardened security built in

HPE Trusted Supply Chain hardens the protections designed into select HPE products with unrivaled supply chain visibility and standards compliance providing a 360° view and mitigation plan for current and emerging cyber threats.

Trusted authenticity

HPE Trusted Supply Chain provides protection with HPE employees assigned to the product build to manage the product manufacturing process that adheres to the strictest sourcing, inspection, and traceability standards.

Unique labeling

HPE Trusted Supply Chain products include a **T** in the server model name, for example, HPE ProLiant DL380T. A Trusted Supply Chain sticker is placed on the product hardware.

iLO security state: High Security (iLO 5, iLO 6), Secure Standard (iLO 7)

Configuring iLO to use High Security or Secure Standard mode reduces the attack surface for cyber attackers, making it more difficult to insert compromised code or malware into the server firmware. This security state locks down the host and requires specific authentication through encryption before a user can log into the server.

UEFI Secure Boot feature: Enabled

For customers who ask Hewlett Packard Enterprise to load an OS at the factory, enabling UEFI Secure Boot ensures that each component launched during the boot process is digitally signed. The signature is validated against a set of trusted certificates embedded in the UEFI BIOS. An industry-recognized feature, secure boot ensures that the genuine and authenticated OS is initialized by preventing the loading of unauthenticated BIOS components and OS bootloaders.

If a customer chooses to load the OS on their own, they can configure this feature when the HPE Trusted Supply Chain server is delivered to the end-user location.

HPE Server Configuration Lock: Enabled

This feature takes cryptographic measurements, or images, of the supported HPE Trusted Supply Chain server firmware, hardware components, and options. It creates a digital fingerprint of the server configuration. If any firmware, hardware, or options are altered, an alert is displayed at startup.

Enabling this feature at the factory essentially prevents all tampering or compromise to the server composition, no matter how slight. This feature uses a password, created by Hewlett Packard Enterprise, to lock down the server configuration at the factory. The password is securely transmitted to the customer, who unlocks the server when it arrives.

For customers who need to perform additional configuration steps, perhaps through a reseller or partner, the password can be used to unlock and re-lock the server before it ships to the end-user location.

HPE chassis intrusion detection switch: Enabled

This mechanism protects the HPE Trusted Supply Chain server from physical intrusion. Complementing and reinforcing the protection from the Server Configuration Lock, the chassis intrusion detection switch registers an alert if the top of the server chassis is removed. It logs an event in the iLO firmware, even if the server is powered off. If any cyber attacker or unauthorized personnel open the server chassis, the customer will know that someone might have tampered with the server.

More information

Silicon root of trust
iLO security states
Server Configuration Lock
Chassis intrusion detection switch

Secure boot

HPE Server Security Optimized Service for HPE ProLiant

Servers with the HPE Server Security Optimized Service for HPE ProLiant option ship with the following characteristics:

iLO security state: High Security (iLO 5, iLO 6), Secure Standard (iLO 7)

Configuring iLO to use High Security or Secure Standard mode reduces the attack surface for cyber attackers, making it more difficult to insert compromised code or malware into the server firmware. This security state locks down the host and requires specific authentication through encryption before a user can log into the server.

UEFI Secure Boot feature: Enabled

For customers who ask Hewlett Packard Enterprise to load an OS at the factory, enabling UEFI Secure Boot ensures that each component launched during the boot process is digitally signed. The signature is validated against a set of trusted certificates embedded in the UEFI BIOS. An industry-recognized feature, secure boot ensures that the genuine and authenticated OS is initialized by preventing the loading of unauthenticated BIOS components and OS bootloaders.

If a customer chooses to load the OS on their own, they can configure this feature when the HPE Trusted Supply Chain server is delivered to the end-user location.

HPE Server Configuration Lock: Enabled

This feature takes cryptographic measurements, or images, of the supported HPE Trusted Supply Chain server firmware, hardware components, and options. It creates a digital fingerprint of the server configuration. If any firmware, hardware, or options are altered, an alert is displayed at startup.

Enabling this feature at the factory essentially prevents all tampering or compromise to the server composition, no matter how slight. This feature uses a password, created by Hewlett Packard Enterprise, to lock down the server configuration at the factory. The password is securely transmitted to the customer, who unlocks the server when it arrives.

For customers who need to perform additional configuration steps, perhaps through a reseller or partner, the password can be used to unlock and re-lock the server before it ships to the end-user location.

HPE chassis intrusion detection switch: Enabled

If this feature is included in the configuration, it is enabled as part of this service option.

This mechanism protects the HPE Trusted Supply Chain server from physical intrusion. Complementing and reinforcing the protection from the Server Configuration Lock, the chassis intrusion detection switch registers an alert if the top of the server chassis is removed. It logs an event in the iLO firmware, even if the server is powered off. If any cyber attacker or unauthorized personnel open the server chassis, the customer will know that someone might have tampered with the server.

More information

Silicon root of trust
iLO security states
Server Configuration Lock
Chassis intrusion detection switch
Secure boot

Receiving an HPE Trusted Supply Chain server

About this task

When you receive an HPE Trusted Supply Chain server, the best practice is to complete the following steps:

Procedure

1. **Disable the Server Configuration Lock in-transit status with the UEFI System Utilities**.
2. **Change the Server Configuration Lock password**.
3. Save the new password in a secure location.
4. (Optional) Share the new password with your server support team.
5. Deploy the server.

Server Configuration Lock

Server Configuration Lock protects a server against tampering or compromise to the server composition. You can enable this feature when a server is in transit or use it all the time to monitor for configuration changes.

HPE Trusted Supply Chain servers ship with this feature enabled and the server is set to `in-transit` status. HPE creates the Server Configuration Lock password and it is securely transmitted to the customer. On first boot, the customer enters the password to disable the `in-transit` status. At this time, they can disable or modify the feature configuration.

Server Configuration Lock creates a digital fingerprint of the server configuration. The digital fingerprint is a securely stored log file on the server TPM 2.0 (if supported) or in the server nonvolatile memory.

Server Configuration Lock monitors the server for:

- DIMM changes

- CPU changes
- PCIe device changes
- Security configuration changes
- System firmware revisions
- Server Configuration Lock password authentication failures

If a configuration change is detected during POST, an administrator must enter the Server Configuration Lock password to review the issue and continue the startup process. The configuration change is recorded in the Integrated Management Log (IML). A count of the detected issues is available in the Server Configuration Lock detection log in the UEFI System Utilities.

You can configure Server Configuration Lock in the UEFI System Utilities or by using the iLO RESTful API.

> **IMPORTANT**
>
> When you use Server Configuration Lock, remember to record the password securely. By design, this security feature prevents bypassing or resetting the password when it is lost or forgotten.

For configuration instructions, including the steps to disable `in-transit` status, see the Server Configuration Lock User Guide for HPE ProLiant servers and HPE Synergy at the following website: **https://www.hpe.com/info/server-config-lock-UG-en**.

More information

HPE Trusted Supply Chain server configuration
HPE Server Security Optimized Service for HPE ProLiant

Chassis intrusion detection switch

Supported products are available with a chassis intrusion detection switch. The chassis intrusion detection switch detects any physical intrusion into the chassis. iLO logs an event when the access panel is opened or closed. Chassis intrusion monitoring and iLO reporting activities occur regardless of the server power state.

You can configure various alerting mechanisms (Remote SysLog, SNMP, or AlertMail) to notify you when a chassis intrusion event occurs. For more information about configuring alerts, see the iLO or iLO RESTful API documentation in the Hewlett Packard Enterprise Support Center (**https://www.hpe.com/support/hpesc**).

To verify server support for this feature, check the server QuickSpecs document at the following website: **https://www.hpe.com/info/qs**.

Platform certificates

On supported Hewlett Packard Enterprise servers, HPE iLO can be provisioned with a **Trusted Computing Group** (TCG)-compliant platform certificate. A platform certificate is an attribute certificate that functions as a signed manifest of the detailed hardware and firmware configuration of the server as built by Hewlett Packard Enterprise.

Platform certificates are used to detect supply chain tampering. When a customer receives a server, they can use the HPE Platform Certificate Verification Tool (PCVT) to compare the server state to the platform certificate.

iLO does not allow you to update or delete the certificate. You can view the certificate by using the following iLO RESTful API GET command:

```
/redfish/v1/Managers/1/SecurityService/PlatformCert/Certificates/1
```

More information

Advanced BIOS and platform security options
HPE Platform Certificate Verification Tool

HPE Platform Certificate Verification Tool

On a server provisioned with a Trusted Computing Group (TCG)-compliant platform certificate, you can use the HPE Platform Certificate Verification Tool (PCVT) to verify the configuration.

Running PCVT allows you to independently compare the server state to the information stored in the platform certificate.

- If the measurement of a component matches the reference value, this result indicates that the configuration has not changed since the server left the Hewlett Packard Enterprise factory.
- If a measurement does not match the reference value, this result indicates that the configuration changed since the server left the HPE factory. When a change is detected, investigation is needed to determine whether the change is expected and approved, or whether supply chain tampering occurred.

You can download the HPE PCVT and view the documentation at the following website: **https://github.com/HewlettPackard/PCVT**.

More information

Platform certificates

Zero trust security

Provides technologies that establish trust through hardware validation, firmware protection, and component authentication.

In a zero trust environment, security is monitored throughout the server life cycle to protect the hardware, firmware, hypervisor, OS, and applications.

Subtopics

Silicon root of trust
Secure boot
SPDM authentication
Server identity
Trusted Platform Module
Unauthorized access prevention
Persistence-enabled attack protection
iLO firewall for system ROM and iLO firmware

Silicon root of trust

Figure 1. iLO 7 silicon root of trust with secure enclave

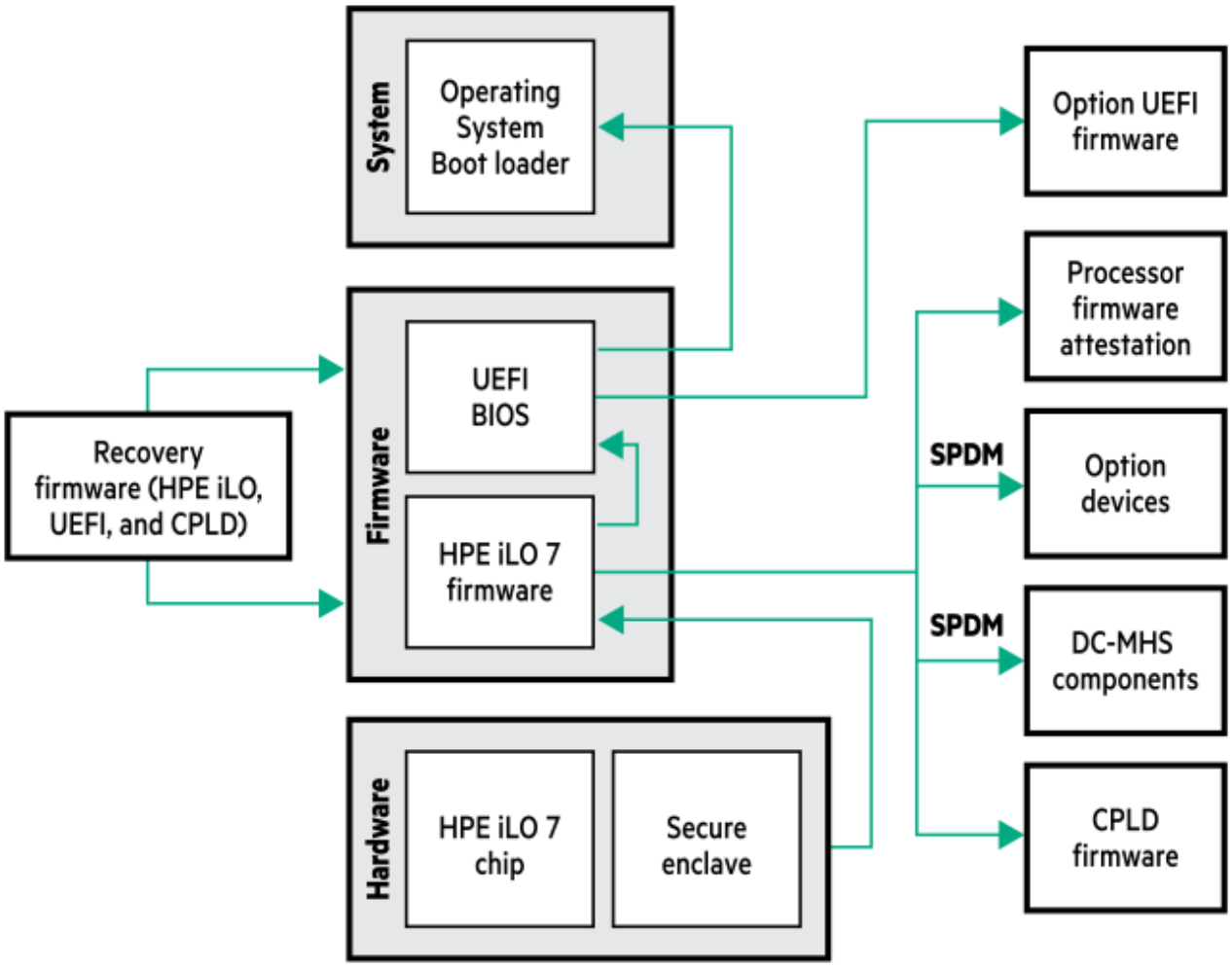

Figure 2. iLO 6 silicon root of trust

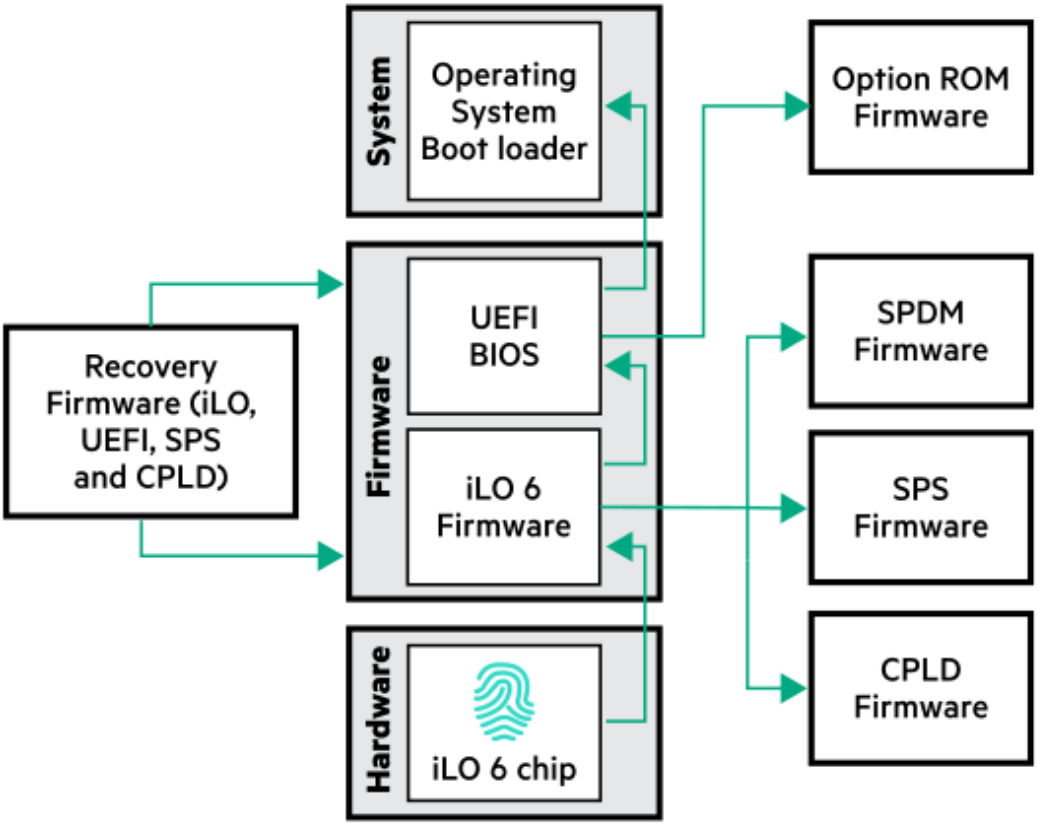

Figure 3. iLO 5 silicon root of trust

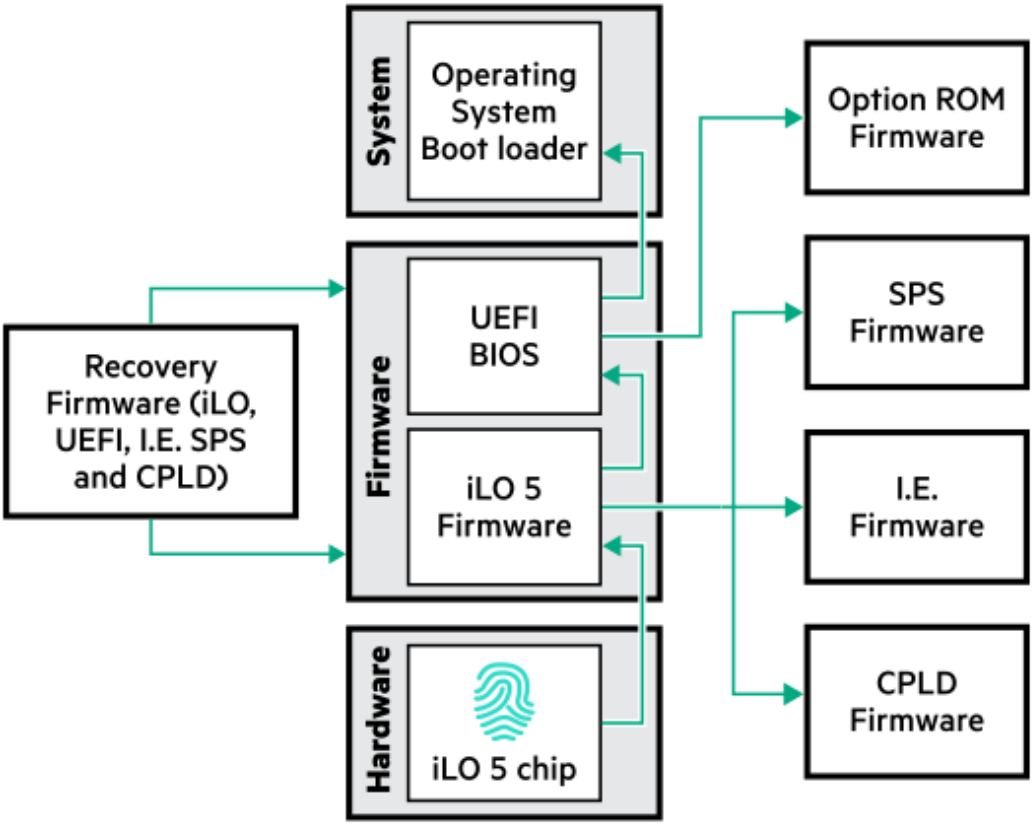

Silicon root of trust and recovery

Depending on your server generation, the iLO 7 secure enclave, iLO 6 chip, or iLO 5 chip acts as a silicon root of trust. The silicon root of trust makes it impossible to insert any malware, virus, or compromised code that could corrupt the server boot process.

- **Secure enclave (iLO 7)**—An independent security processor embedded on the system boards of supported HPE servers and compute modules. It provides comprehensive anti-tamper measures, side-channel resistance, and layered security. On servers with iLO 7, the iLO chip controls server management features and the secure enclave focuses on security.

  The iLO 7 secure enclave is designed to meet the FIPS 140-3 Level 3 standards.

- **iLO chip**—A remote server management processor embedded on the system boards of supported HPE servers and compute modules. iLO enables the monitoring and controlling of servers from remote locations. On servers with iLO 6 and iLO 5, the iLO chip provides both server management and security features.

A digital fingerprint of the iLO firmware is embedded in the secure enclave (iLO 7) or the iLO chip (iLO 6 and iLO 5) at a trusted chip fabrication facility. At startup, the iLO firmware integrity is verified against the digital fingerprint to determine if it is allowed to run. If the iLO firmware fails the validation process, the system automatically restores the iLO firmware from the System Recovery Set.

When the iLO firmware runs, it verifies the following components:

- CPLD (System Programmable Logic)
- Innovation Engine (iLO 5 only)
- Server Platform Services (SPS) firmware (iLO 5 and iLO 6)

  The SPS firmware runs on the management engine (ME).
- SPDM Firmware (iLO 6 and iLO 7)
- UEFI BIOS (system ROM)

If the active system ROM fails validation by iLO and an iLO Advanced license is installed, iLO will automatically recover it from the copy stored in the System Recovery Set. If an iLO Advanced license is not installed, the system firmware can be recovered manually by using one of the available firmware update methods. For added redundancy on some systems, the system firmware is mirrored. This feature allows UEFI to check itself during server startup. If tampering is detected, it will fail over from the active side to the recovery side.

If a supported firmware type fails validation, the system automatically restores it from the System Recovery Set if an iLO Advanced license is installed. If a license is not installed, the failure is logged and you must complete the repair manually.

Check the IML and the Security Log for information about the firmware validation activities and recovery actions.

After the firmware is verified and the server powers on, the secure boot feature verifies additional components during the boot process.

Improved key storage in the secure enclave (iLO 7)

Protecting the keys used to encrypt business critical data should be an essential component of any business continuity plan. Keys for encrypting data at rest need to be protected against natural disasters, theft, ransomware, and even network outages.

Advanced Key Management in iLO 7 protects local keys by providing a secure repository for keys, certificates, and other server security assets. This feature is an improvement over using the TPM to encrypt local keys, because the keys are not stored in an exposed location.

PQC Code signing (iLO 7)

Post-quantum cryptographic (PQC) methods with Leighton-Micali Signatures (LMS) are used to sign the iLO 7 firmware with a quantum-resistant digital signature.

More information

Secure boot
Firmware verification
System Recovery Set

Secure boot

Secure boot is implemented in the BIOS and does not require special hardware. Secure boot ensures that each component launched during the boot process is digitally signed and that the signature is validated against a set of trusted certificates embedded in the UEFI BIOS. Secure boot validates the software identity of the following components:

- UEFI drivers loaded from PCIe cards
- UEFI drivers loaded from mass storage devices
- Preboot UEFI Shell applications
- OS UEFI boot loaders

When secure boot is enabled:

- Firmware components and operating systems with boot loaders must have an appropriate digital signature to run during the boot process.
- Operating systems must support secure boot and have an EFI boot loader signed with one of the authorized keys to boot. For more information about supported operating systems, see **https://www.hpe.com/info/ossupport**.

You can use a directly attached management console or the iLO remote console to customize the certificates embedded in the UEFI BIOS. For more information, see the UEFI System Utilities user guide for your platform (**https://www.hpe.com/support/hpeuefisystemutilities-quicklinks**).

For information about using the iLO RESTful API to configure the secure boot settings, see the iLO RESTful API documentation (**https://servermanagementportal.ext.hpe.com/**).

SPDM authentication

HPE servers with iLO 7 and iLO 6 use SPDM (Security Protocol and Data Model) to verify the integrity of components and authenticate supported option cards. Examples of supported hardware include PCIe option cards such as storage controllers and network adapters, and NVMe drives attached to the CPU.

This feature uses open DMTF standards to enable a zero trust configuration between the server management software and the supported server options.

To enable this feature, use the iLO web interface or the iLO RESTful API to configure the **Global Component Integrity** option and the **Component Integrity Policy**.

- **Global Component Integrity**—When enabled, iLO authenticates the server components and option cards by using SPDM authentication.
- **Component Integrity Policy**—When the **Global Component Integrity** option is enabled, configure a policy to control the system boot policy based on the SPDM authentication results.

- **Halt Boot On SPDM Failure**—Stops system boot during SPDM authentication failure.
- **No Policy**—Boot the system in normal mode, regardless of SPDM authentication failure.

If SPDM is enabled, an unsupported or non-authentic component changes the iLO security status to **Risk**.

iLO supports the SPDM specification v1.0, v1.0.1, v1.1, and v1.2 for authentication. For devices with no supported SPDM version, iLO logs Security Log events for SPDM failures.

You can check the status of individual component authentication in the Security Log.

The results of SPDM authentication are reported in the following iLO locations.

- IML
- Security Dashboard
- Security Log
- Device Inventory page
- SNMP traps and REST alerts

For information about option support, see the option QuickSpecs document at **https://www.hpe.com/info/qs**.

Subtopics

SPDM supported algorithms

More information

SPDM supported algorithms

SPDM supported algorithms

Based on the configured security state, iLO categorizes the SPDM algorithms as described in Gen12 servers and Gen11 servers.

Gen12 servers

FIPS or Secure Standard

BaseAsymAlgo(4)

- TPM_ALG_RSASSA_2048
- TPM_ALG_RSAPSS_2048
- TPM_ALG_RSASSA_3072

- TPM_ALG_RSAPSS_3072
- TPM_ALG_ECDSA_ECC_NIST_P256
- TPM_ALG_RSASSA_4096
- TPM_ALG_ECDSA_ECC_NIST_P384

BaseHashAlgo (4)

- TPM_ALG_SHA_256
- TPM_ALG_SHA_384
- TPM_ALG_SHA_512

CNSA

BaseAsymAlgo(4)

- TPM_ALG_RSASSA_3072
- TPM_ALG_RSAPSS_3072
- TPM_ALG_RSASSA_4096
- TPM_ALG_ECDSA_ECC_NIST_P384

BaseHashAlgo (4)

- TPM_ALG_SHA_384

Gen11 servers

Production, FIPS, or High Security

BaseAsymAlgo(4)

- TPM_ALG_RSASSA_2048
- TPM_ALG_RSAPSS_2048
- TPM_ALG_RSASSA_3072
- TPM_ALG_RSAPSS_3072
- TPM_ALG_ECDSA_ECC_NIST_P256
- TPM_ALG_RSASSA_4096
- TPM_ALG_ECDSA_ECC_NIST_P384

BaseHashAlgo (4)

- TPM_ALG_SHA_256

- TPM_ALG_SHA_384
- TPM_ALG_SHA_512

CNSA

BaseAsymAlgo(4)

- TPM_ALG_RSASSA_3072
- TPM_ALG_RSAPSS_3072
- TPM_ALG_RSASSA_4096
- TPM_ALG_ECDSA_ECC_NIST_P384

BaseHashAlgo (4)

- TPM_ALG_SHA_384

Server identity

A server identity (DevID) provides a way to uniquely identify and authenticate a server across networks. It is based on the **IEEE** 802.1AR DevID standard and consists of an asymmetric cryptographic key pair and a digital certificate. A DevID is uniquely bound to a server. It enables a server to cryptographically prove its identity in various industry standards and protocols that authenticate, provision, and authorize communicating devices. Being a cryptographically strong credential protected by hardware, a DevID can serve as the foundation for zero trust operation.

The iLO server identity features enable supported servers to make a zero-trust connection to cloud-based tools such as HPE Compute Ops Management. These features enable iLO to make a trusted outbound connection to begin provisioning without first completing the configuration steps in iLO. The outbound connection is enabled by TLS using the iLO IDevID/LDevID as the iLO TLS certificate.

In addition to DevID identity credentials, HPE provisions servers with Attestation Key (AK) credentials. AK credentials are similar to their DevID counterparts and can be used for attestation use cases.

HPE supports both factory-provisioned and field-provisioned (customer-defined) server identity and attestation credentials. Factory-provisioned credentials have lifetime validity and are immutable. For flexibility, factory credentials are provisioned to the server iLO and the TPM. In each case, the private key component of each credential is protected by the iLO or the TPM chip it is bound to. Credentials bound to the TPM comply with the Trusted Computing Group (TCG) **TPM 2.0 Keys for Device Identity and Attestation** specification.

Terminology

The IEEE 802.1AR DevID standard defines a manufacturer-provided Initial Device Identifier (IDevID). An IDevID can be complemented by one or more Locally Significant Device Identifiers (LDevIDs) provided by a

network administrator after manufacturing. The TCG has adopted the same designations for the Initial (IAK) and Locally significant (LAK) Attestation Key.

At the factory, HPE might provision more than one DevID and AK credential set to identify different elements of a system. To comply with the described naming scheme, HPE designates additional factory-provisioned DevID and AK credentials that complement the existing IDevID and IAK credentials as System LDevID and System LAK.



NOTE

To avoid confusion and emphasize the distinction between permanent HPE-issued IDevIDs/IAKs and System LDevIDs/System LAKs compared to customer-supplied LDevIDs and LAKs, this topic uses the terms factory-provisioned and field-provisioned.

Factory-provisioned DevID and AK credentials

Different generations of HPE servers carry a different complement of factory-provisioned DevID and AK credentials. The following list outlines the certificate types provisioned with each generation. For the exact name used for a certificate type, see the iLO documentation for your platform **https://www.hpe.com/support/hpeilodocs-quicklinks**.

Gen12

- iLO PCA IDevID
- iLO PCA IAK
- iLO System LDevID
- iLO System LAK
- TPM System IDevID
- TPM System IAK

Gen11

- iLO IDevID (System)
- TPM System IDevID
- TPM System IAK

Gen10/Gen10 Plus (Intel-based):

- iLO IDevID (System)
- TPM System IDevID
- TPM System IAK

Gen10 Plus (AMD-based):

- iLO LDevID (System)
- TPM System IDevID
- TPM System IAK

Credentials with System in their name identify the server as a whole and reference the chassis serial number. Later generations of servers contain additional PCA IDevID and IAK credentials. These credentials enable separate identification and attestation of the internal circuit board that hosts the iLO and TPM components. HPE recommends that all but a few specialized use cases should employ the credentials containing System in their title to ensure the highest levels of interoperability with authentication and attestation protocols and standards.

Field-provisioned LDevID credentials

HPE servers support provisioning of customer-supplied, field-provisioned LDevID credentials for the TPM. Field-provisioned LDevID certificates might contain customer-specific information to enable custom authentication and authorization scenarios and can be changed over the lifetime of the server. A customer can provision an arbitrary number of these credentials to the TPM (limited by TPM capacity), certified by their designated PKI (Public Key Infrastructure).

HPE servers can also be provisioned with one customer-supplied LDevID certificate on the iLO. Like its TPM counterparts, the field-provisioned iLO LDevID certificate is fully specified by the customer.

Accessing the certificates using Redfish

You can view the Identity and Attestation certificates provisioned to a server (both iLO and TPM-based) by using the following iLO RESTful API GET commands:

```
/redfish/v1/CertificateService/
```

or:

```
/redfish/v1/Managers/1/SecurityService/
```

Subtopics

802.1X and iLO

802.1X and iLO

IEEE 802.1X is a mechanism for port-based network access control. It regulates access to the network and protects against unidentified and unauthorized network access.

802.1X uses the Extensible Authentication Protocol (EAP) for message exchange during the authentication process. EAP-Transport Layer Security (EAP-TLS) is an EAP type that uses certificates or smart cards for authentication.

HPE iLO supports EAP-TLS authentication for onboarding into an 802.1X access-controlled network.

- Using a factory-provisioned server identity, an HPE server can securely onboard and establish its identity for unattended autonomous operation. Depending on your iLO version, iLO IDevID, iLO IDevIDPCA, or both types are supported.

  For more information, see the user guide for your iLO version (**https://www.hpe.com/support/hpeilodocs-quicklinks**.

- iLO also supports a user-provisioned server identity (LDevID) for 802.1X authentication.

When a factory-provisioned and a user-provisioned server identity are present on a system, the user-provisioned LDevID is used for EAP-TLS authentication.

802.1X authentication is enabled by default. iLO does not initiate EAP-TLS authentication or respond to authentication requests if the system does not have an iLO DevID.

To use 802.1X on a server with a preinstalled secure device identity, configure your Authentication, Authorization, and Accounting (AAA) server to accept the iLO DevID certificate. For example, configure the AAA server to support EAP-TLS and install the DevID issuer certificate in the RADIUS server.

More information

Server identity

Trusted Platform Module

Trusted Platform Modules (TPM) are computer chips that securely store artifacts used to authenticate the platform. These artifacts can include passwords, certificates, or encryption keys. You can also use a TPM to store platform measurements to make sure that the platform remains trustworthy.

For servers configured with a Trusted Platform Module, TPM enables the firmware and OS to take measurements of all phases of the boot process.

TPM is an option on Gen10 and Gen10 Plus products and it is included in all Gen11 and later products. For TPM support information, see the server QuickSpecs at the following website: **https://www.hpe.com/info/qs**.

More information

Trusted platform module options

Unauthorized access prevention

Access to iLO involves a multilayer security process that includes authentication, authorization, data integrity, and security keys. The iLO firmware is digitally signed with a private key that prohibits unauthorized firmware from executing.

Authentication

Determines who is at the other end of the network connection. Authentication can be performed locally or through directory services. Supported authentication methods include local accounts, Kerberos authentication, Directory integration, SSO, and smart cards.

CAC smart card authentication

A common access card (CAC) is a United States Department of Defense (DoD) smart card for multifactor authentication. Common access cards are issued as standard identification for active-duty military personnel, reserve personnel, civilian employees, non-DoD government employees, state employees of the National Guard, and eligible contractor personnel. In addition to its use as an ID card, a common access card is required for access to government buildings and computer networks.

Each CAC carries a smart card certificate that must be associated with your local user account in the iLO web interface. Upload and associate your smart card certificate with your account by using the controls on the **Certificate Mappings** page (iLO 5 and iLO 6) or the **User Management > Users** page (iLO 7).

CAC authentication with LDAP directory support uses a service account to authenticate to the directory service, and the user account must be present in the same domain as the configured directory server. Additionally, the user account must be a direct member of the configured groups or extended schema Roles. Cross-domain authentication and nested groups are not supported.

Two-factor authentication

Part of the requirement necessary to satisfy Federal Government Certification is two-factor authentication. Two-factor authentication is the dual authentication of the CAC. For example, the CAC satisfies two-factor authentication by mandating that you have the physical card and you know the PIN number associated with the card. To support CAC authentication, your smart card must be configured to require a PIN.

Personal Identity Verification

Personal Identity Verification (PIV) credentials are supported.

Authorization

Determines whether the user attempting to perform an action has the right to do it. Using local accounts, you can define separate iLO users and vary their server access rights. Using directory services, you maintain network user accounts and security policies in a central, scalable database that supports thousands of users and system management roles.

Data integrity

Verifies that no one has altered incoming commands or data. iLO uses digital signatures and trusted remote consoles.

Security keys

Manages the confidentiality of sensitive data and transactions. iLO protects privacy through TLS encryption of web pages and the AES encryption of remote console and virtual serial port data. iLO can be configured to allow only the highest cryptographic methods (like AES) to be used. iLO uses layers of security and industry-standard methods to secure access to the server. When high encryption modes are not used, iLO might negotiate weaker keys or algorithms.

Persistence-enabled attack protection

A persistence-enabled attack occurs when unauthorized users gain and maintain long-term system access without being detected. With this access, they might initiate activities such as a permanent denial of service attack or the installation of malware.

iLO offers the following protections:

Authorized firmware updates

All firmware types that iLO can flash, including the iLO firmware, UEFI BIOS (system ROM), and CPLD, are digitally verified before installation. This verification prevents the insertion of compromised code by users without physical access.

The system BIOS, iLO firmware, and other essential firmware types are digitally verified at startup as part of the Silicon Root of Trust. This verification protects firmware from compromise even with physical access by the attacker.

Unencrypted ports

iLO clearly defines the port encryption status. You can disable access to any nonencrypted ports (such as IPMI). Access to iLO requires a password unless you disable the password.

Authentication and audit trails

iLO creates a log of authentication failures and successes across every interface. SSH key authentication makes successful brute force attacks even less likely. For additional protection, iLO 5 and iLO 6 use 2048-bit RSA keys and iLO 7 uses ED25519 keys. When the CNSA security state is used, iLO requires ECDSA 384-bit keys.

Unsuccessful Login delays

iLO captures all login activity. It uses a progressive time delay during unsuccessful login attempts to impede brute force and dictionary attacks.

Restricted access and modification of critical security parameters

iLO logs security parameter changes such as user accounts, log changes, and certificates. This feature allows tracing of potential unauthorized information access attempts.

Daily firmware flash limit

To protect the iLO and server hardware from repeated flashing attacks, iLO limits the number of times per day that you can flash each supported firmware type. The limit is 20, which includes both successful and failed firmware flash activities. The firmware flash count is reset every 24 hours, or 24 hours after a successful firmware update. The firmware flash limit applies to firmware updates initiated through any application or interface.

The firmware flash count is stored in the nonvolatile memory. If the flash limit is exceeded, the firmware cannot be flashed, and the software notifies you that you must try again later.

More information

Silicon root of trust

iLO firewall for system ROM and iLO firmware

HPE servers and compute modules are compliant with **NIST800-147B, BIOS Protection Guidelines for Servers**.

The system ROM and the iLO firmware reside on flash chips that are physically protected from host access by the iLO chip. Only the iLO firmware can write to these flash chips. This configuration prevents unauthorized access from the host system. The iLO firmware authenticates any images written to the BIOS flash chip.

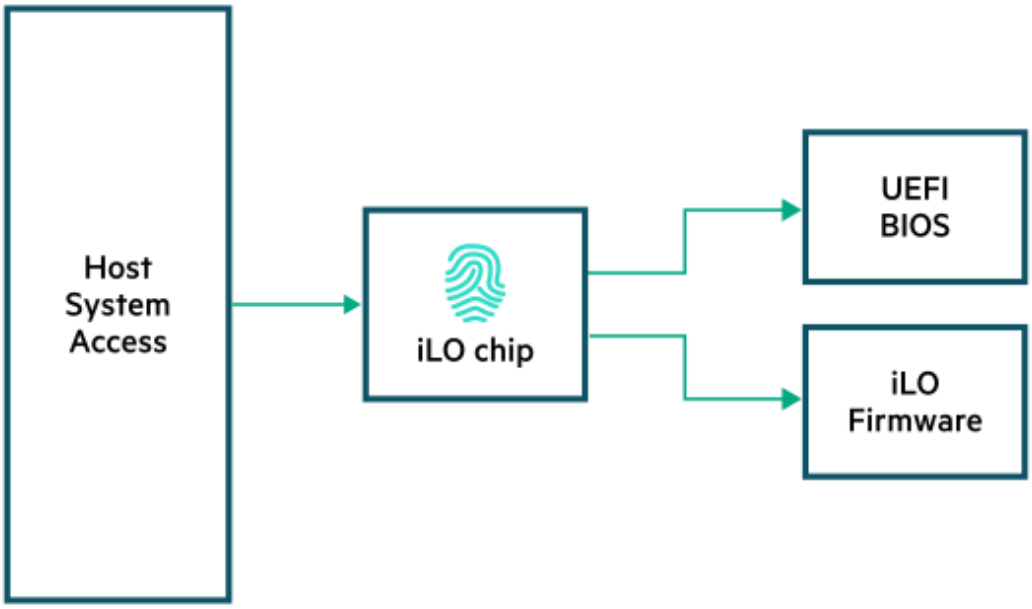

Physical access security

Provides safeguards that help prevent, detect, and monitor unauthorized physical access to systems.

Subtopics

System maintenance switch
USB security
iLO Service Port
Rack and power security
Bezel lock

More information

Chassis intrusion detection switch

System maintenance switch

Hewlett Packard Enterprise servers and compute modules have hardware system maintenance switches, which control different security functions and configurations.

The system maintenance switch is inside the chassis on the system board. To access the switch, you must take the device offline, power it down, and remove the access cover.

The following system maintenance switches are off by default. You can enable these switches when you want to change the product behavior. The system maintenance switch settings are listed on the access panel label and in the product user guide.

iLO security (position 1) for Gen12 servers

On Gen12 servers, the iLO security setting on the system maintenance switch enables the process for recovering the default iLO password.

For password recovery instructions, see the HPE iLO 7 User Guide and the HPE iLO 7 Troubleshooting Guide (**https://www.hpe.com/support/hpeilodocs-quicklinks**).

iLO security (position 1) for Gen10, Gen10 Plus, and Gen11 servers

On Gen10, Gen10 Plus, and Gen11 servers, the iLO security setting on the system maintenance switch provides emergency access to an administrator who has physical control of the system board.

The system maintenance switch position that controls iLO security is sometimes called the iLO Security Override switch.

When this switch is off (default), iLO enforces the configured authentication settings.

Disabling this switch has the following effects:

- When iLO is configured to use the Production security state, all login credential verifications are disabled.
- When iLO is configured to use the High Security, FIPS, or CNSA security state, all login credential verifications are enforced.
- If the host server is reset, the UEFI System Utilities software runs.
- iLO networking, the iLO web interface, and the ROM-based system utility are accessible even if they were previously disabled.
- The System Recovery privilege is enforced. To perform an action that requires this privilege, you must authenticate with a user account that has the privilege enabled.
- A warning message is displayed on iLO web interface pages, indicating that iLO security is disabled:



- An iLO log entry is added to record the iLO security change.
- If an SNMP Alert Destination is configured, an alert is sent when iLO starts after the iLO security configuration change.

BIOS password disabled (position 5)

When the switch is off (default), you can configure and use the **Set Admin Password** and **Set Power On Password** features in the UEFI System Utilities.

When the switch is on, configured BIOS administrator and power-on passwords are removed.

Reset configuration (position 6)

When the switch is off (default), the BIOS configuration is maintained.

When the switch is on, all BIOS factory defaults are restored.

You can view the system maintenance switch status on the **System Information** page in Intelligent Provisioning.



For more information, see the maintenance and service guide for your product.

Subtopics

Reasons to disable iLO security

More information

Power-on password
Administrator password

Reasons to disable iLO security

You might want to use the system maintenance switch to disable iLO security in the following situations:

Gen12 servers

- All user accounts that have the Administer User Accounts privilege are locked out and the default password is misplaced or forgotten.

Gen10, Gen10 Plus, and Gen11 servers

- All user accounts that have the Administer User Accounts privilege are locked out.
- An invalid configuration prevents iLO from being displayed on the network, and the ROM-based configuration utility is disabled.
- iLO is unreachable over the network because the iLO NICs are turned off or the iLO network configuration is incorrect. It is not possible or convenient to use the UEFI System Utilities to correct the configuration.

  Disabling iLO security resets the iLO network configuration to the factory default settings.

  - On most servers, this action enables DHCP and the iLO Dedicated Network Port.
  - On servers where the iLO Dedicated Network Port is an optional add-on card, this action enables DHCP and the Shared Network Port.
  - On servers with the iLO network enablement module, this action enables DHCP and the iLO Dedicated Network Port.
- Only one user name is configured, and the password is forgotten.
- You want to erase the configuration information stored on the battery-powered SRAM memory device.

  When iLO starts, it backs up the configuration information stored in the battery-powered SRAM memory device to the nonvolatile flash memory (NAND). If the SRAM is erased, the configuration is automatically restored. When iLO security is disabled, the SRAM data is not restored automatically.

More information

System maintenance switch

USB security

You can configure the server USB port settings through the **USB Options** section of the UEFI System Utilities.

You can configure:

- USB port and embedded device startup behavior.
- The ability to boot from USB devices such as virtual media devices and embedded SD cards.
- Which USB or SD device to search first when enumerating boot devices.
- Availability of the internal SD card.

For more information, see the UEFI System Utilities user guide for your platform (**https://www.hpe.com/support/hpeuefisystemutilities-quicklinks**).

iLO Service Port

The iLO Service Port is a USB port with the label **iLO** on supported servers.

You can use the iLO Service Port to download the Active Health System Log or to connect a client for iLO access.

- Connect to the iLO Service Port on a server with iLO 7 by using a standard USB Type A to Type C cable or a USB Type C to Type C cable.
- Connect to the iLO Service Port on servers with iLO 5 or iLO 6 by using a supported Ethernet adapter.

The iLO Service Port has the following security characteristics:

- You cannot use the Service Port to boot any device within the server, or the server itself.
- You cannot access the server by connecting to the Service Port.
- You cannot access the connected device from the server.

You can disable the feature, or choose whether to allow USB flash drive access, require credentials, or use an Ethernet adapter.

For more information, see the iLO documentation (**https://www.hpe.com/support/hpeilodocs-quicklinks**).

More information

Recommended security settings for iLO

Rack and power security

Hewlett Packard Enterprise offers solutions to enhance rack and power security, including racks with physical and electronic lock options and locking power cords to provide secure cable retention and power-related downtime.

For more information about these solutions, see **https://www.hpe.com/info/rackandpower**

Bezel lock

For protection against external access on supported products, you can install a bezel lock. For ordering information, see the product QuickSpecs at **https://www.hpe.com/info/qs**. For installation instructions, see the product user guide.

Cloud-based management

Provides security capabilities and governance controls for cloud-based server management operations.

Overview

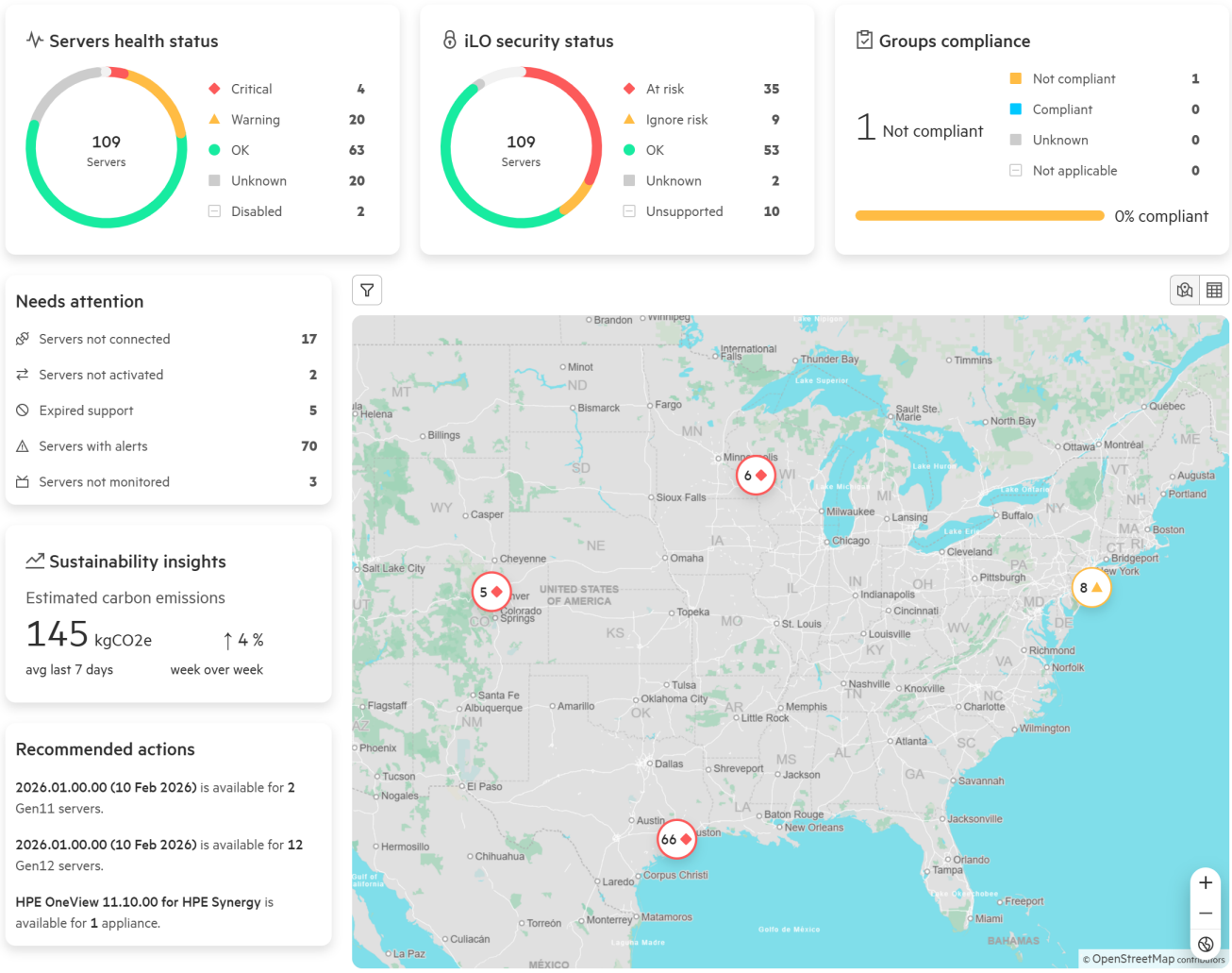

Subtopics

HPE Compute Ops Management security features
Compute Ops Management security FAQ

HPE Compute Ops Management security features

HPE Compute Ops Management is a cloud-based platform that securely streamlines server operations and automates key life cycle tasks through a single, modern management experience.

Security is integrated throughout the application.

Authentication

Users can use the following authentication methods:

- Username and password
- Multifactor authentication (MFA)
- Single sign-on (SSO)

Device authentication

- Devices authenticate with a mutual TLS (mTLS) connection to ensure that they are connecting to a known entity.
- Devices are assigned to a single customer.

User roles

The tasks you can perform with Compute Ops Management depend on your assigned role (Observer, Operator, Administrator, or custom role).

Scope-based access control

You can use GreenLake scope groups when you want to limit the servers your administrators and operators can manage.

For example, you might have multiple administrators working in the same workspace or service instance. To prevent accidental or unauthorized changes, apply a scope group to the administrator user account roles. User accounts that are configured for scope-based access control can perform management actions only on the servers specified by the Compute Ops Management filter associated with the scope group. All other servers in the affected service instance are read-only. If a user with restricted access starts a management action on a read-only server, an authorization error occurs.

When a user account is configured with scope-based access control, the user:

- Can view all servers and server groups in a workspace.

- Can perform management actions on servers and server group members that are included in the Compute Ops Management filter associated with the configured scope group.

  On servers that are not included in the Compute Ops Management filter associated with the configured scope group, users can perform the **Configure email notification preference** action.

  On server group members that are not included in the Compute Ops Management filter associated with the configured scope group, users can perform compliance checking actions.

- Can manage server groups, but cannot configure the **Automate adding servers** option.
- Can run reports.
- Cannot manage saved filters or disable the scope-based access control feature on a saved filter.

Audit log

GreenLake records information about all server actions initiated through the Compute Ops Management application. GreenLake saves this information in the audit log.

iLO security risk monitoring

Compute Ops Management monitors the iLO security dashboard to alert you to potential security risks. The security risk status is calculated by comparing the server configuration to a predefined set of security recommendations.

A security risk indicates that the server configuration differs from the recommended configuration. If you want to configure a setting with a different value from the recommendation, you can configure that setting to be excluded from the risk status.

Secure gateway

HPE Compute Ops Management secure gateway allows HPE Compute Ops Management customers to aggregate their on-premises server connections from the data center over a single outbound connection to Compute Ops Management. This feature eliminates the need to have each server connected individually over the internet to Compute Ops Management.

Secure gateway is an on-premises appliance deployed as a virtual machine.

The following connection types are supported:

- **Direct via secure gateway**—Connect supported servers with HPE iLO 5 and later baseboard management controllers (BMCs).
- **Credentials via secure gateway**—Connect supported servers with other BMCs that support the DMTF Redfish RESTful API.

  You can use an HPE-provided Redfish Interoperability Profile to verify server model support.

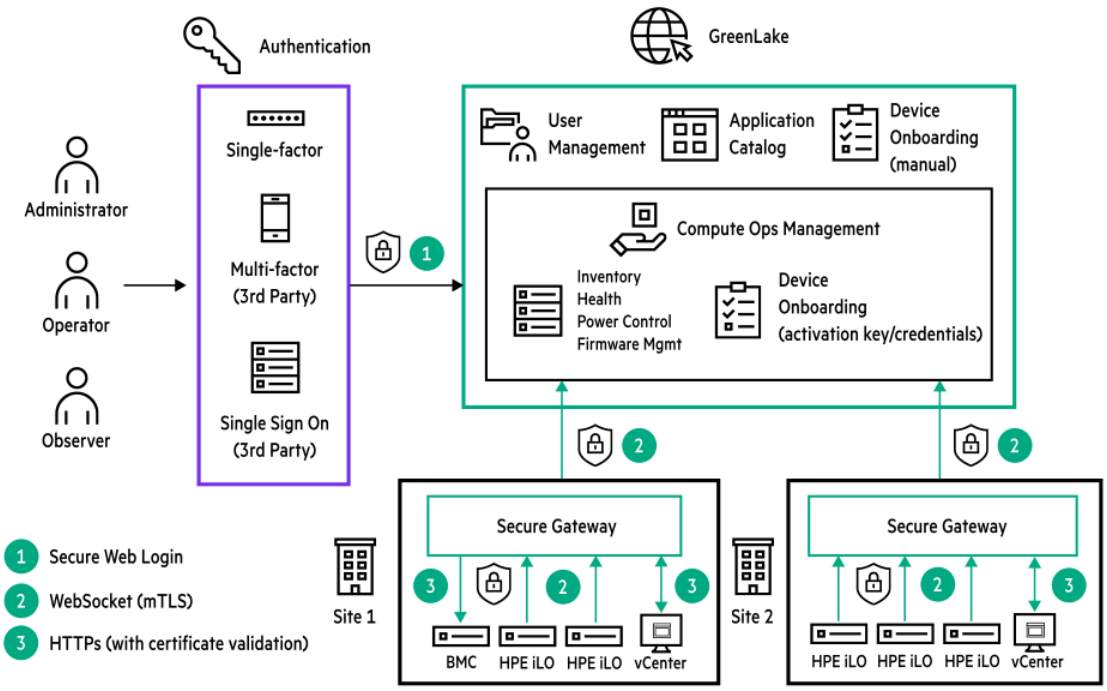

Secure gateway features include:

All connection types

- Virtual machine-based appliance
- Automatic secure gateway appliance software updates through Compute Ops Management
- Server BMC aggregation sends data over a secure connection to Compute Ops Management
- Automatic recovery from service and cloud connection failures

Direct via secure gateway connection features

- Servers with a **Direct via secure gateway** connection can use the same monitoring and management features that are supported with a direct connection to Compute Ops Management.
- Efficient firmware updates—The secure gateway supports optimized component downloads by caching server firmware components. This feature decreases the internet-facing network resources used for firmware updates, which reduces costs and improves firmware update reliability. The secure gateway ensures that any component that is already downloaded and cached will not be downloaded from HPE again to perform a subsequent firmware update.

Credentials via secure gateway connection features

- Server health monitoring and alerting

- Firmware inventory
- Hardware inventory
- Internal storage inventory

  On some server models, this information is displayed only if the server was powered on when the hardware inventory was collected.
- Power management (Power on, Power off, Reset, and Cold boot)

  Some server models do not support cold boot.
- Email notifications
- Location configuration

HPE Compute Ops Management plug-in for VMware vCenter

- **Simple integration**—The VMware vSphere integration is available in the Compute Ops Management UI, and your VMware vCenter Servers are configured directly in Compute Ops Management.

  The plug-in functionality integrates with the Compute Ops Management secure gateway feature (v1.0.7 or later), eliminating the need for a dedicated appliance.

  For detailed instructions, see Configuring VMware vSphere Lifecycle Manager integration in the **HPE Compute Ops Management User Guide**.
- **Automated SPP registration and updates**—Service Pack for ProLiant (SPP) bundles are automatically synchronized with connected vCenter Servers, eliminating manual configuration steps and reducing the risk of errors.
- **Security**—All external communications are routed through the secure gateway, which improves security by eliminating exposure to external networks. The vCenter credentials provided for integration with Compute Ops Management are encrypted using an RSA-3072 cryptographic key (meeting FIPS 140-2 and CNSA compliance requirements) and stored securely. These credentials are transferred to the secure gateway in encrypted form and can be decrypted only by the secure gateway, providing a high level of security for the integration.
- **Automatic appliance maintenance**—Maintenance tasks, including secure gateway updates, are automated to reduce overhead and accelerate feature delivery.

More information

- **Cloud Security Alliance STAR Registry Listing for Compute Ops Management**
- **HPE Compute Ops Management Security Guide**

- **HPE Compute Ops Management secure gateway technical paper**
- **HPE Compute Ops Management plug-in for VMware vCenter technical paper**
- Infusion Points: **Built to Defend: Our Deep Dive into HPE ProLiant Compute Gen12 and HPE Compute Ops Management**

Compute Ops Management security FAQ

The following sections provide answers to frequently asked questions about Compute Ops Management. For more information, see the **HPE Compute Ops Management Security Guide**.

Subtopics

General
Processing of personal data
Data and data access
Regulations compliance governance
Business continuity
Authentication
Connectivity

General

Can HPE Compute Ops Management features be disabled to prevent unauthorized changes?

GreenLake supports custom resource restriction policies (RRPs) that allow you to configure resource access control. You can use this feature with Compute Ops Management when you want to limit the servers that administrators and operators can manage.

You can also use custom roles to allow or prevent the use of certain features. For example, performing an operating system image deployment requires the Server Edit permission that is included by default in the Operator and Administrator roles.

What certifications does Compute Ops Management have?

- CAIQ STAR level1 and SOC2 Type2 certified.

Does Compute Ops Management have a OneTrust ADQ number?

No.

Who is responsible for the physical security of the solution?

- The cloud providers for GreenLake are responsible for the physical security of the software-as-a-service (SaaS) application hosted infrastructure.
- The customer is responsible for the physical security of the customer-owned managed devices.

How is change management handled?

The HPE change management process is documented. All changes are managed through automated daily deployment and Jira tickets, which are kept for more than six months.

System and user changes to managed devices are saved in the GreenLake Audit Log for more than six months.

Processing of personal data

Does HPE handle data according to a records retention policy?

HPE records retention policies focus on legal retention requirements and align with current global principles and recognized industry standards. HPE maintains a records retention policy that defines "records" and how long they must be retained.

For more information, see the HPE Privacy Statement: **https://www.hpe.com/us/en/legal/privacy.html**.

Does HPE have a Data Protection or Privacy officer?

The Data Protection Officer is available at **hpeprivacy@hpe.com**.

For more information, see the **Information Commissioner's Office (ico.) documentation**.

Where is customer data located? Are there international data transfers or restrictions?

HPE is a global company and many of our business processes utilize a global operational model. Personal data given to HPE might be transferred across state and country borders for the purposes of data consolidation, storage, and simplified customer information management. Any access or transfer of personal information across state or country boundaries must comply with applicable local laws and contractual requirements.

HPE has Binding Corporate Rules (BCRs) for controllers to address the transfer of personal data it controls from the EU, EEA, and Switzerland to its non-EU operations.

HPE is not certified under the EU-US Privacy Shield program.

If a customer has special requirements or restrictions on the movement or transfer of data, these requirements are agreed to in the contract. To the extent agreed upon in the contract, these requirements or restrictions are incorporated into the HPE business processes used to deliver the services.

If the transfer of personal customer data from the EU, EEA, and Switzerland to HPE non-EU operations is required in connection with any HPE service, HPE will sign controller to processor EU Model contracts with the customer.

The HPE Global Privacy Policy is disclosed publicly at: **https://www.hpe.com/us/en/privacy/master-policy.html**

Does HPE comply with individual rights requests?

HPE has a process for managing requests by individuals to exercise their rights under the General Data Protection Regulation (GDPR).

Any requests received for personal data controlled by a customer are forwarded to the customer for the customer to process.

The HPE Global Privacy Policy is disclosed publicly at: **https://www.hpe.com/us/en/privacy/master-policy.html**

Does HPE routinely assess third parties who process data on its behalf?

Yes.

Does HPE have policies, processes, and procedures in place for assessing compliance with legal and contract requirements?

HPE requires that service providers who handle or process personal data sign appropriate privacy and security contract terms which specify the required data-protection measures.

HPE reserves the right to audit service providers on a regular basis for compliance with applicable laws and contractual requirements.

For more information see the GreenLake **SaaS data sheet**.

Does HPE maintain contracts with third parties to ensure the availability, integrity, and confidentiality of data?

Yes. These contracts typically include provisions to ensure that data is handled securely and that the third parties follow HPE's stringent security standards and compliance and auditing requirements.

How long does it take HPE to notify a customer about an incident?

The HPE incident response process requires notification to a customer “without undue delay” when their EU personal data has been involved in a “personal data breach” as defined by the GDPR (no later than 72 hours after having become aware of it).

Does HPE have policies and procedures to ensure that response and recovery plans are established, in place, and managed?

Yes. For more information, see the HPE Global Privacy Policy disclosed publicly at **https://www.hpe.com/us/en/privacy/master-policy.html**.

Does HPE train its workforce on privacy policies, procedures, laws, and other requirements?

All HPE employees are required to take the HPE Standards of Business Conduct training on an annual basis. This training includes modules on data privacy, security, and information handling.

Depending on job responsibilities, employees might be required to take additional training courses customized to meet the needs of their job.

HPE has other privacy and security training modules available to employees through our training catalog, and also conducts on-demand security awareness campaigns.

How does HPE ensure Privacy by Design?

The HPE privacy program is designed to help ensure that HPE complies with all applicable data protection laws in its role as a controller or processor of customer data, including the requirements of the GDPR.

The HPE Privacy Office is responsible for monitoring developments in privacy laws globally. The Privacy Office attorneys review new laws or changes to existing laws to assess the impact on the business and identify required changes to HPE privacy policies, programs, or other business practices.

Legally, the customer is responsible for determining whether their use of HPE products and services to process their personal data is compliant with the data protection and other laws to which they are subject.

HPE has three main privacy policies:

- The **Global Master Privacy Policy** governs the handling of personal data of both HPE employees and business contacts.
- An online **privacy statement** governing online privacy and other data collection activities, which is accessible from all **https://www.hpe.com** webpages.
- An Employee Data Privacy Policy governing the processing of personal data related to current, past, and prospective employees, which is accessible to internal HPE users.

Has HPE introduced measures to prevent unauthorized sharing and to protect data that is transferred to a third country?

HPE is a global company and many of our business processes utilize a global operational model. Personal data given to HPE might be transferred across state and country borders for the purposes of data consolidation, storage, and simplified customer information management. Any access or transfer of personal information across state or country boundaries must comply with applicable local laws and contractual requirements.

HPE has Binding Corporate Rules (BCRs) for controllers to address the transfer of personal data it controls from the EU, EEA, and Switzerland to its non-EU operations.

HPE is not certified under the EU-US Privacy Shield program.

If a customer has special requirements or restrictions on the movement or transfer of data, these requirements are agreed to in the contract. To the extent agreed upon in the contract, these requirements or restrictions are incorporated into the HPE business processes used to deliver the services.

If the transfer of personal customer data from the EU, EEA, and Switzerland to HPE non-EU operations is required in connection with any HPE service, HPE will sign controller to processor EU Model contracts with the customer.

For more information, see:

- **HPE Binding Corporate Rules**
- **HPE Global Privacy Policy**
- **HPE GreenLake Terms legal data sheet**

Data and data access

Do HPE employees have superuser access to GreenLake customer workspaces?

No. Only users who are added to a GreenLake workspace have access.

The user who creates a GreenLake account is the default administrator and can invite other users and configure permissions.

HPE cannot access the customer data on managed servers.

What access do HPE support personnel need for troubleshooting an issue?

A support agent needs access to the activity logs, which the customer can provide.

A customer also has the option of granting workspace access to a support agent.

Selected HPE support personnel and engineers have access to managed server hardware inventory data and software-as-a-service (SaaS) application data. HPE has a review process to control access to this data.

In some cases, a support agent needs the GreenLake workspace ID so that they can review the Compute Ops Management application logs.

What GreenLake and Compute Ops Management roles are available?

You can assign built-in or custom roles. Users have access to only the features supported by their assigned roles.

For more information, see:

- Workspace identity & access in the **GreenLake Cloud User Guide**
- Compute Ops Management user account roles and permissions in the **HPE Compute Ops Management Getting Started Guide**

What information does Compute Ops Management store, and where is it stored?

- Compute Ops Management stores the full server inventory that is available through Redfish APIs from a managed server. The stored data includes server IP address, serial number, and part number.

  Compute Ops Management stores this data within the region selected by the customer.

For data availability information, including data access and the server and appliance retention policy, see the **HPE Compute Ops Management User Guide**.

- GreenLake stores users, roles, user email addresses, and permissions. Compute Ops Management retrieves this information when it is needed.

What data is transmitted from Compute Ops Management to the customer?

- Email notifications are sent if configured by the customer. These notifications might include summary and health information and automatic case creation details.
- Webhooks in Compute Ops Management allow customers to opt in to receive the latest representation of a resource whenever that resource changes state.
- Reports are generated within Compute Ops Management and can be saved externally.
- Server inventory and other details are stored within Compute Ops Management and are not transmitted externally.

Are audit, authentication, and configuration logs ISO 27001 compliant, and can they be forwarded or downloaded for integration into solutions like SAN CLaaS?

Audit logs can be downloaded from GreenLake.

ISO 27001 requires logging for Security, System, Application, and User Events. The GreenLake audit log includes these events, but GreenLake had not completed the ISO 27001 certification process.

Are server iLO configurations saved and stored to enable restoration?

Compute Ops Management does not back up and store the iLO configuration.

What happens to the data when a server is removed from Compute Ops Management?

All managed server inventory data is deleted when a server is removed from Compute Ops Management. This process relies on AWS controls for data sanitization.

For more information, see:

- Compute Ops Management data availability in the **HPE Compute Ops Management User Guide**.
- Media destruction in the following document: **https://aws.amazon.com/compliance/data-center/controls/**.

Regulations compliance governance

What are the details of the HPE compliance framework and programs?

- HPE is a global company and many of our business processes utilize a global operational model. The HPE Regulatory Compliance & Governance Office is responsible for establishing and maintaining compliance with applicable laws.
- Information about the HPE Standards of Business Conduct is disclosed publicly at: **https://sbc.hpe.com/en/**.
- Information about HPE Corporate ethics is disclosed publicly at: **https://www.hpe.com/us/en/about/governance/ethics.html**.
- The latest HPE Living Progress Report is available at: **https://www.hpe.com/us/en/living-progress.html**.

How does HPE anticipate changes in laws and regulations?

HPE is a global company. The HPE Operations, Legal & Administrative Affairs team employs attorneys who monitor for emerging laws and regulations in their jurisdictions. Emerging requirements are assessed to determine whether they will affect HPE. If so, a readiness and implementation project team, which includes stakeholders from global functions and business units, is assembled. Its mission is to prepare the company for compliance.

Does HPE comply with all regulations or is HPE confronted with conflicting regulations resulting in noncompliance?

HPE complies with applicable laws and contractual requirements.

What does HPE have in place to ensure that customers are informed about service or brand-damaging events?

HPE has a security incident response process that includes:

- Industry-wide best practices
- Knowledge of and adherence to applicable legal requirements in the event of data loss
- Communication plans geared toward limiting risk exposure

The HPE Privacy Office maintains an incident response plan to address privacy issues, including required notifications to regulators, individuals, or customers as a result of an incident involving personal data.

- Security incidents involving personal data controlled by a customer are handled in conjunction with the data breach response requirements in the HPE services contract.
- The HPE incident response process requires notification to a customer “without undue delay” when their EU personal data has been involved in a “personal data breach” as defined by the General Data Protection Regulation (GDPR).

Business continuity

Does HPE have a Business Continuity Plan?

HPE Compute Ops Management has a documented, evaluated, approved, communicated, tested, and maintained business continuity management and operational resiliency policy and procedure. This document is published internally.

For more information, see the **Consensus Assessment Initiative Questionnaire (CAIQ)** document.

How often is the Business Continuity Plan tested, and how is it tested?

The Compute Ops Management team reviews and tests the business continuity and operational resiliency documentation and plans annually, and any necessary updates are made.

The business response team (BRT) participates in an annual game day with other stakeholders.

For more information, see the **Consensus Assessment Initiative Questionnaire (CAIQ)** document.

Does the Business Continuity Plan include a minimum tolerable service disruption period? How does HPE ensure that service can be recovered within that period?

HPE has processes in place to ensure that service will be recovered within a prescribed time frame.

How are data backups conducted?

GreenLake and Compute Ops Management is a hosted solution that is built with redundancy in mind so that the solution could tolerate the failure of a data center.

Database backups are taken regularly for use in a disaster recovery scenario.

Could GreenLake access to iLO be temporarily disabled if a security breach occurred in a GreenLake workspace?

Internet connectivity for iLO can be disabled. In this scenario, direct access to the iLO from the local network is available for direct device management.

Can customers choose where data is hosted?

Compute Ops Management is a software-as-a-service (SaaS) application shared by multiple customers. The solution is architected across multiple availability zones for disaster recovery and business continuity.

Compute Ops Management uses AWS for hosting in the following locations:

- US West
- AP NorthEast
- EU Central

Data is stored at the hosted region. Backup, disaster recovery, and business continuity policies are configured appropriately by the application team and are not configurable by customers.

Authentication

How does authentication work with GreenLake and HPE Compute Ops Management?

GreenLake requires an email address for login, SSO, and communication. Customers can also store user contact information related to a managed device location.

For information about authentication, see the **Manage workspace > Authentication** section in the **GreenLake Cloud User Guide**.

What iLO features are accessible through Compute Ops Management for remote administrators?

iLO access depends on the assigned iLO user privileges. Compute Ops Management supports remote console access and requires the user to log in with their iLO credentials. When you click a link in Compute Ops Management to start the iLO remote console, you have access to only the features allowed by your iLO privileges.

When a server is connected to Compute Ops Management, Compute Ops Management has administrator access to the server iLO. All iLO features are not available through the Compute Ops Management connection. Only the features exposed by Compute Ops Management are available. Access to specific Compute Ops Management features is protected by the roles, scope, and permissions granted to users in GreenLake.

Connectivity

What encryption technology is used with HPE Compute Ops Management?

Each managed device uses a unique key pair for sending data securely over mTLS with a zero trust policy.

- Encryption in transit uses the following ciphers:

  TLS 1.2

  - TLS_ECDHE_RSA_WITH_AES_128_GCM_SHA256
  - TLS_ECDHE_RSA_WITH_AES_256_GCM_SHA384
  - TSL_ECDHE_RSA_WITH_CHACHA20_POLY1305_SHA256

  TLS 1.3

  - TLS_AES_128_GCM_SHA256
  - TLS_AES_256_GCM_SHA384

- TLS_CHACHA20_POLY1305_SHA256

- Encryption at rest uses AES-256.

Does the iLO on a managed server require access to local network resources?

iLO connectivity to other network segments is not required, only iLO access to Compute Ops Management (through the Internet) is required. If there is no connectivity to the local network resources, some services such as Active Directory and NTP servers are not available. These resources are not required for using Compute Ops Management.

Local network access is recommended for performing operating system installations through Compute Ops Management.

Are configuration changes and software updates pushed from GreenLake to the server iLO, or are they prepared for the server profile, after which the server iLO connects, downloads, and installs and configures them?

Changes are driven from Compute Ops Management to the server. When the change request is a firmware update, the iLO downloads the firmware directly.

Is the Compute Ops Management connection unidirectional or bidirectional?

The connection is a WebSocket connection that includes requests and responses. iLO initiates the WebSocket connection, Compute Ops Management does not open a connection to iLO on its own. The connection is always initiated by the managed server to Compute Ops Management. Communication is bidirectional after the encrypted WebSocket connection is established.

iLO server management features

Provides security guidance, authentication controls, encryption options, and management protections for iLO environments.

For information about performing tasks in the iLO web interface, see the online help or view the iLO user guide (**https://www.hpe.com/support/hpeilodocs-quicklinks**).

You can use the iLO RESTful API to perform many of the tasks that are available through the iLO web interface. For more information, see **https://servermanagementportal.ext.hpe.com/**.

NOTE

For iLO 5 and iLO 6, RIBCL and the scripting tools HPQLOCFG, LOCFG.PL, and HPONCFG have entered the sustenance stage. HPE will now provide only critical bug and security fixes for RIBCL. These tools are not supported with iLO 7.

Hewlett Packard Enterprise recommends using the iLOREST Tool or iLO RESTful API.

Subtopics

iLO security guidelines
Network settings and ports used by iLO
Access control for features, ports, and protocols
iLO network connection options
Virtual LAN
Network and management ports
SSH keys
SSL certificates
Guidelines for using iLO with IPMI or DCMI over LAN
Automatic certificate enrollment
Security dashboard
Security audits
Security Log
Remote console security
iLO encryption settings
Kerberos authentication with iLO
Schema-free directory authentication
HPE Extended Schema directory authentication
Firmware verification
iLO backup and restore

More information

Recommended security settings

iLO security guidelines

When you set up and use iLO, consider the following guidelines for maximizing security.

The following guidelines apply to iLO 5, iLO 6, and iLO 7.

- Set up iLO on a dedicated management network.

  Hewlett Packard Enterprise recommends establishing a private management network that is separate from your data network. Configure the management network so that it can be accessed only by administrators.

  If you connect iLO devices to a shared network, consider the iLO devices as separate servers and include them in security and network audits.

- Do not connect iLO directly to the Internet.

The iLO processor is a management and administration tool, not an Internet gateway. Connect to the Internet by using a corporate VPN that provides firewall protection.

> **IMPORTANT**
>
> Change the iLO user account passwords immediately if iLO has been connected directly to the Internet.

- Replace the default self-signed certificate by installing an SSL certificate that is signed by a Certificate Authority (CA).
- Install trusted CA certificates to enable certificate validation for external services such as LDAP.
- Change the password for your user accounts, including the default user account.

  Change the iLO management passwords according to the same guidelines as the server administrative passwords.

  > **IMPORTANT**
  >
  > Follow the iLO user account password guidelines when you create and update user accounts.

- Instead of creating user accounts with all privileges, create multiple accounts with fewer privileges.
- Keep your iLO and server firmware up to date.
- Use an authentication service (for example, Active Directory or OpenLDAP), preferably with two-factor authentication.

  This feature allows authentication and authorization using the same login process throughout the network. It provides a way to control multiple iLO devices simultaneously. Directories provide role-based access to iLO with specific roles and privileges based on time and location.

- Implement two-factor authentication.

  This feature provides additional security, especially when you make connections remotely or outside the local network.

- Protect SNMP traffic.

  Reset the community strings according to the same guidelines as the administrative passwords. Also set firewalls or routers to accept only specific source and destination addresses. Disable SNMP at the server if you do not need it.

- Disable ports and protocols that you do not use (for example, **SNMP** or **IPMI/DCMI over LAN**).

- Disable features that you do not use (for example, remote console).
- Configure the remote console to automatically lock the server OS console.
- Disable the iLO Configuration Utility in the UEFI System Utilities or configure iLO to require login credentials when users access it.
- Disable the ROM-based configuration utility in the UEFI System Utilities or configure iLO to require login credentials when users access it.
- Configure iLO to log authentication failures.
- Enable firmware verification scans.
- Depending on your iLO version, use the **Security** or **Security Dashboard** page to monitor security risks and recommendations.
- Use the **Security Log** to monitor security-related events.
- Set the **Downgrade Policy** to **Downgrade requires Recovery Set privilege**.
- Keep the Recovery Set up to date.
- Configure iLO to avoid access over an HTTP connection.

  To configure this behavior, install a trusted SSL certificate that is signed by a Certificate Authority (CA) and enable the **IRC requires a trusted certificate in iLO** setting.

  In this configuration, when you access the iLO web interface, iLO returns an HTTP Strict Transport Security (HSTS) flag in the response header, which enables the browser to automatically redirect any HTTP request to HTTPS.

The following guidelines apply only to iLO 5 and iLO 6.

- Configure a higher security state on the **Encryption Settings** page.
- Enable the **Require Host Authentication** feature.
- Use HTTPS for the .NET remote console.

  To configure this option, install a trusted SSL certificate that is signed by a Certificate Authority (CA) and enable the **IRC requires a trusted certificate in iLO** setting.

Network settings and ports used by iLO

The values listed in Network settings and ports configurable through iLO can be configured to comply with site requirements, security initiatives, or to support third-party services in your environment.

Table 1. Network settings and ports

Description	Default	Protocol	Direction
AlertMail SMTP port	25	TCP	Outbound [1]
DHCPv4 server	67	UDP	Internal [2]
DHCPv4 client	68	UDP	Outbound [1]
DHCPv6 client	547	UDP	Outbound [1]
Directory server LDAP SSL port	636	TCP	Outbound [1]
DNS resolution	53	UDP	Outbound [1]
iLO Federation/SSDP multicast [3] SSDP multicast [4]	1900	UDP	Bidirectional [1], [6]
IPMI/DCMI over LAN Specifies whether to allow IPMI/DCMI communi cations over the LAN with iLO.	Disabled		
IPMI/DCMI over LAN port	623	UDP	Inbound [6]
IPMI over KCS [4]	Enabled		
Kerberos KDC server port	88	TCP, UDP	Outbound [1]
Key Manager port	User-configurable	TCP	Outbound [1]
NTP	123	UDP	Outbound [1]
NetBIOS name service/WINS [5]	137	UDP	Outbound [1]
Remote console Allows you to enable or disable access through the iLO remote consoles.	Enabled		
Remote console port [5]	17990	TCP	Inbound [6]
Remote syslog port	514	UDP	Outbound [1]
Remote support port	7906	TCP	Outbound [1]
Secure shell (SSH) Allows you to enable or disable the SSH feature.	Enabled		

Description	Default	Protocol	Direction
SSH provides encrypted access to the iLO command-line protocol (CLP).			
Secure shell (SSH) port	22	TCP	Inbound [6]
SNMP Specifies whether iLO responds to external SNMP requests.	Enabled		
SNMP agent port	161	UDP	Inbound [6]
SNMP trap port	162 for SNMP alerts (outgoing only).	UDP	Outbound [1]
Virtual media Enables you to specify whether virtual media is enabled or disabled.	Enabled		
Virtual media port [5]	17988	TCP	Inbound [6]
Web server [7, 5] Allows you to enable or disable access through the iLO web server.	Enabled		
Web server non-SSL port (HTTP) [5]	80	TCP	Inbound [6]
Web server SSL port (HTTPS) [5]	443	TCP	Bidirectional [1, 6]

[1] iLO initiates the connection to an external server.
[2] Not exposed on the management network.
[3] Applies to iLO 5.
[4] Applies to iLO 6 and iLO 7.
[5] Applies to iLO 5 and iLO 6.
[6] An external client initiates the connection to iLO.
[7] Supports the iLO web interface, remote console, iLO RESTful API, iLO Federation, firmware updates, and RIBCL.

Ports not supported by iLO

iLO does not support the commonly used ports listed in Unsupported ports.

Table 2. Unsupported ports

Description	Port	Protocol	Notes
LDAP-unsecured • Connection (TCP) • Connectionless (UDP)	389	TCP/UDP	iLO uses secure port 636 for outgoing L DAP connections.
Global Catalog LDAP-unsecured • Connection (TCP) • Connectionless (UDP)	3268	TCP/UDP	iLO uses secure LDAP connections.

Access control for features, ports, and protocols

iLO allows you to disable unused features, ports, and protocols. For more information, see the iLO user guide (**https://www.hpe.com/support/hpeilodocs-quicklinks**).

iLO network connection options

You can connect iLO to the network through a dedicated management network or a shared connection on the production network.

Dedicated management network

In this configuration, the iLO port is on a separate network. A separate network improves performance and security because you can physically control which workstations are connected to the network. A separate network also provides redundant access to the server when a hardware failure occurs on the production network. In this configuration, iLO cannot be accessed directly from the production network. The Dedicated management network is the preferred iLO network configuration.

Figure 1. Dedicated management network

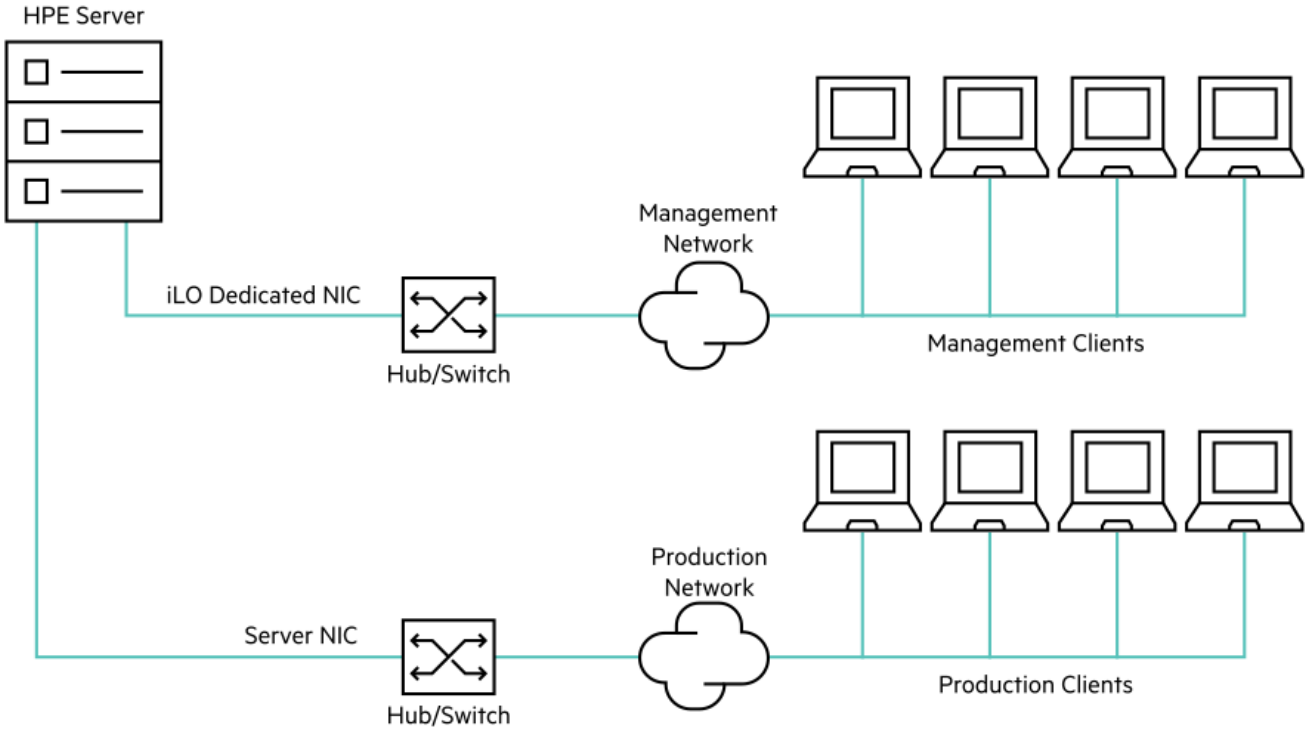

Production network

In this configuration, both the NIC and the iLO port are connected to the production network. In iLO, this type of connection is called the Shared Network Port configuration. Certain Hewlett Packard Enterprise embedded NICs and add-on cards provide this capability. This connection enables access to iLO from anywhere on the network. Using a Shared Network Port configuration reduces the amount of networking hardware and infrastructure required to support iLO.

There are some drawbacks to using this configuration.

- With a shared network connection, traffic can hinder iLO performance.
- During server startup, and when the OS NIC drivers are loading and unloading, there are brief periods of time (2–8 seconds) when you cannot access iLO from the network. After these short periods, iLO communication is restored and iLO will respond to network traffic.

  When this situation occurs, the Remote Console and connected iLO Virtual Media devices might be disconnected.
- Network controller firmware updates or resets can also cause iLO to be unreachable over the network for a brief period.
- The iLO Shared Network Port connection can operate up to a maximum speed of 100 Mbps. Network-intensive tasks such as data transfer through iLO virtual media might be slower than the same tasks performed in a configuration that uses the iLO Dedicated Network Port.

Figure 2. Shared network connection

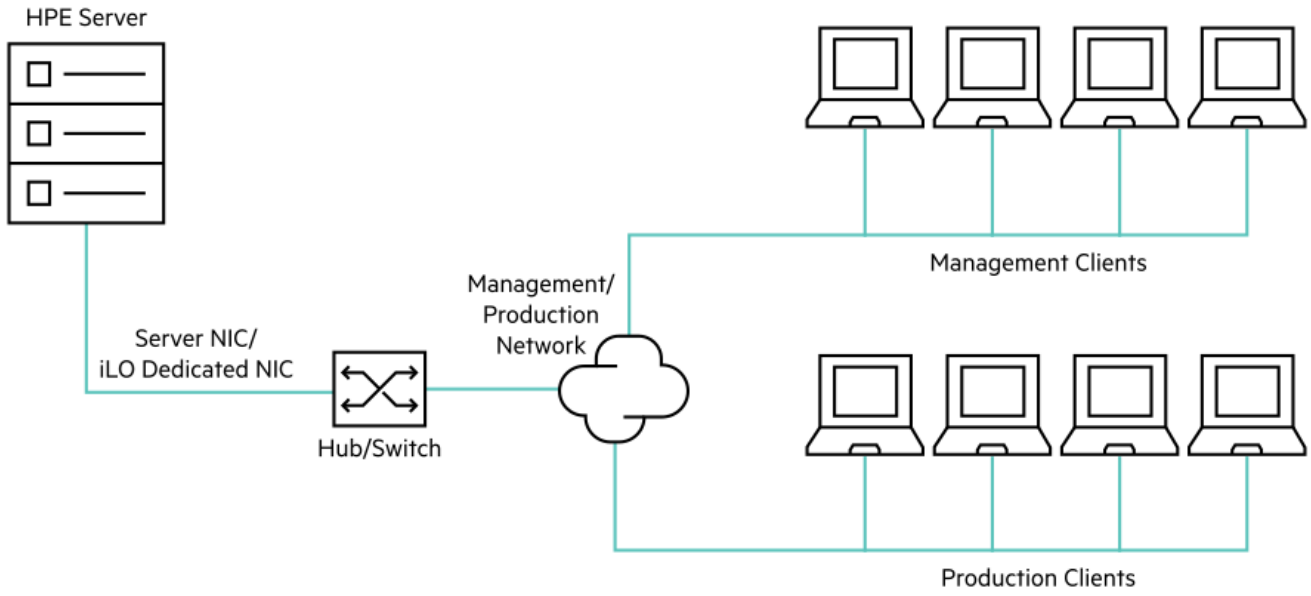

iLO network enablement module

Some servers require an optional iLO network enablement module to add support for remote management through a dedicated management network (default) or a shared network connection. If an iLO network enablement module is not installed, iLO access is supported only through host-based (in-band) access methods. Some examples of the supported host-based access methods include the iLO RESTful API, UEFI System Utilities, iLO Service Port (if available), and the Virtual NIC.

To review the network connections that your server supports, see the server user guide.

More information

Virtual LAN

Network and management ports

Virtual LAN

iLO shared network port

Implementing VLAN tags enhances iLO shared network port security. When you enable VLAN tags, the iLO shared network port becomes part of a VLAN. The VLAN is a logical network that isolates network traffic to segments. It increases security because established rules keep traffic on one segment from entering another segment. All network devices with the same VLAN tag appear to be on a separate LAN even if they are physically connected to the same LAN. The shared network port NIC checks the Ethernet frame for a VLAN ID and compares it against its configured value. If they match, then the shared network port strips the frame of the VLAN tag and forwards it to iLO. If they do not match, the shared network port forwards the frame to the server. The shared network port NIC inserts a VLAN tag into any outgoing Ethernet frames.

iLO dedicated network port

You can use VLAN tagging to distinguish between properly configured and unconfigured devices. Using VLAN tagging allows you to keep unconfigured devices off the network, even if they are physically connected.

More information

iLO network connection options

Network and management ports

The iLO firewall and bridge logic prevents any connection between the iLO management port and the server Ethernet port. Even by using the shared network port, iLO cannot bridge traffic between its 10/100/1000 Ethernet port and the server Ethernet port. Therefore, attacks on the server network cannot compromise iLO.

SSH keys

When you add an SSH key to iLO, the iLO firmware associates the key with a local user account.

Supported SSH key formats

- RFC 4716
- OpenSSH key format
- iLO legacy format

For examples of these formats, see the iLO user guide (**https://www.hpe.com/support/hpeilodocs-quicklinks**).

Working with SSH keys

- The supported SSH key formats are supported with the iLO web interface and the CLI.
- Any SSH connection authenticated through the corresponding private key is authenticated as the owner of the key and has the same privileges.
- The iLO firmware can import SSH keys with a maximum length of 1,366 bytes. If the key length exceeds 1,366 bytes, the authorization might fail. If a failure occurs, use the SSH client software to generate a shorter key.

- If you use the iLO web interface to enter the public key, you select the user associated with the public key.
- If you use the iLO RESTful API to enter the public key, the user name is provided with the public key in the POST body.
- If you use the CLI to enter the public key, the public key is linked to the user name that you entered to log in to iLO.
- If a user is removed after an SSH key is authorized for that user, the SSH key is removed.
- For iLO 5 and iLO 6 only:
  - Only the iLO legacy format is supported with RIBCL scripts.
  - If you use HPQLOCFG and a RIBCL script to enter the public key, you append the iLO user name to the public key data. The public key is stored with that user name.

SSL certificates

The Secure Sockets Layer (SSL) protocol is a standard for encrypting data so that it cannot be viewed or modified while in transit on the network. An SSL certificate is a small computer file that digitally combines a cryptographic key (the server public key) with the server name. Only the server itself has the corresponding private key, allowing for authenticated two-way communication between a user and the server.

A certificate must be signed to be valid. If it is signed by a Certificate Authority (CA), and that CA is trusted, all certificates signed by the CA are also trusted. A self-signed certificate is one in which the owner of the certificate acts as its own CA.

By default, iLO creates a self-signed certificate for use in SSL connections. This certificate enables iLO to work without additional configuration steps.

IMPORTANT

Using a self-signed certificate is less secure than importing a trusted certificate. Hewlett Packard Enterprise recommends importing a trusted certificate to protect the iLO user account credentials.

Certificates are included when you use the iLO backup and restore feature.

More information

iLO backup and restore

Guidelines for using iLO with IPMI or DCMI over LAN

iLO supports IPMI 2.0 and DCMI industry standard protocols. IPMI is an industry standard protocol developed by Intel. It is supported by over 200 vendors, including Hewlett Packard Enterprise.

The Data Center Management Interface (DCMI) uses the same interfaces defined by IPMI, but fewer optional interfaces. The DCMI 1.0 specification identifies the core set of mandatory capabilities and interfaces that data centers require. It includes a subset of extensions added to IPMI 2.0 to further increase the capabilities of DCMI in the data center. DCMI differs from IPMI in that DCMI was designed for the manageability needs of data centers.

iLO enables you to send industry-standard IPMI and DCMI commands over the LAN. The IPMI/DCMI port is set to 623 by default, but it is configurable. When enabled, the **IPMI over LAN** option allows you to send IPMI/DCMI commands over the LAN by using a client-side application. When this option is disabled, server-side IPMI/DCMI applications are still functional.

Observe the following guidelines when using IPMI or DCMI over LAN:

- Segment IPMI/DCMI traffic from the rest of the network. If you are using a shared NIC connection, a VLAN for iLO can be used to accomplish this separation. Isolate the IPMI/Management subnet by using a firewall, and limit access to authorized administrators.
- Do not allow IPMI/DCMI traffic from outside the network.
- iLO supports IPMI 2.0 which uses stronger encryption than IPMI 1.5.

Resolved vulnerabilities

In July 2013, the US-CERT issued an alert (TA13–207A) Risks of Using the Intelligent Platform Management Interface (IPMI). The alert is available at the following website: **https://www.us-cert.gov/ncas/alerts/TA13-207A**).

Hewlett Packard Enterprise addressed the vulnerabilities as follows:

- Cipher 0 is an option that allows authentication to be bypassed. iLO addressed this issue by not allowing cipher 0 to be selected by an IPMI client.
- In the IPMI specification, user ID 1 is used to support anonymous logins. iLO does not support anonymous logins using user ID 1.
- In the IPMI specification, disabled user IDs are configured with user names and passwords. Often, this is preconfigured in manufacturing to well-known user IDs and passwords. iLO does not retain disabled user ID user names and passwords. iLO has one user name preconfigured with a unique password during manufacturing. Hewlett Packard Enterprise recommends that customers reconfigure this default user immediately.
- While the IPMI specification allows for NULL passwords, iLO does not support the setting of a user password to NULL.

- The IPMI specification requires support for RAKP authentication, which allows remote attackers to obtain password hashes and conduct offline password guessing attacks. Since this requirement is part of the IPMI protocol, Hewlett Packard Enterprise recommends disabling IPMI over LAN (if not in use) or isolating the IPMI management subnet.

Automatic certificate enrollment

HPE iLO 7

HPE iLO 7 supports obtaining and renewing TLS certificates automatically using the Automatic Certificate Management Environment (ACME) protocol. HPE iLO supports automated certificate enrollment and renewal through the ACMEv2-compliant (RFC 8555) Certificate Authorities.

ACME server can validate HPE iLO's domain only by `http-01` challenge. Since only `http-01` challenge is supported, wildcard certificates cannot be obtained. This feature is disabled by default. For more information on enabling the feature, see Enabling Automatic Certificate Enrollment in the HPE iLO 7 User Guide.

HPE iLO 6/5

HPE iLO 6/iLO 5 supports obtaining and renewing the SSL certificate automatically using the Simple Certificate Enrollment Protocol (SCEP). Currently, HPE iLO supports these features on the Microsoft Network Device Enrollment Service (NDES).

To enable the certificate enrollment for HPE iLO, you must first configure the following services on the certificate enrollment server:

- Configure the Certificate Authority (CA). CA is the server that runs the Certificate Services and issues certificates.
- Configure NDES. NDES is the Certificate Enrollment Server.

The feature is disabled by default and is not supported when HPE iLO is in CNSA security state, or if ECDSA certificate type is selected in the **Security > Encryption** page. For more information on enabling the feature, see **Enabling Automatic Certificate Enrollment**.

Security dashboard

The iLO **Security Dashboard** displays the status of important security features, the **Overall Security Status** for the system, and the current configuration for the **Security State** and **Server Configuration Lock** features. Use the dashboard to evaluate your configuration for potential risks. When a risk is detected, you can view details and advice for how to improve system security.

Subtopics

Causes of security risk status

More information

Server Configuration Lock
iLO security states

Causes of security risk status

The following security features are monitored on the iLO **Security Dashboard**. If a server does not support a feature, it is not listed.

Access Panel Status

The chassis intrusion detection switch reported that the access panel status is **Intrusion**.

This feature is available only on servers that are configured for chassis intrusion detection.

> **NOTE**
> On Gen12 servers with iLO 7 only: iLO detects a chassis intrusion even if the system does not have any power source. An IML entry is logged with the time stamp of the first intrusion.

Hewlett Packard Enterprise recommends auditing the events recorded in the IML and iLO Event log, and checking surveillance video for any physical intrusion activity on the server.

Authentication Failure Logging

iLO is not configured to log authentication failures.

Hewlett Packard Enterprise recommends enabling this feature.

Default SSL Certificate In Use

The iLO default self-signed certificate is in use.

Hewlett Packard Enterprise recommends configuring a trusted certificate.

IPMI/DCMI Over LAN

The **IPMI/DCMI over LAN** feature is enabled, which exposes the server to known IPMI security vulnerabilities.

Hewlett Packard Enterprise recommends disabling this feature.

Last Firmware Scan Result

The last firmware verification test failed. A firmware component is corrupted or its integrity is compromised.

Hewlett Packard Enterprise recommends updating the affected firmware component to a verified image.

To use this feature, you must install a license. For information about the available license types and the features they support, see the licensing guide (**https://www.hpe.com/support/hpeilodocs-quicklinks**).

Minimum Password Length

The minimum password length is less than the recommended length, which makes the server vulnerable to dictionary attacks.

Hewlett Packard Enterprise recommends setting this value to 8 (default) or greater.

Password Complexity

iLO is not configured to enforce the password complexity guidelines, which makes the server vulnerable to dictionary attacks.

Require Host Authentication (iLO 5 and iLO 6 only)

The **Require Host Authentication** feature is disabled and iLO is configured to use the High Security security state. When this feature is disabled, iLO credentials are not required when you use host-based configuration utilities to access the management processor.

Hewlett Packard Enterprise recommends enabling this feature.

Require Login for iLO RBSU (iLO 5 and iLO 6 only)

iLO is not configured to require login credentials to access the iLO configuration options in the UEFI System Utilities. This configuration allows unauthenticated access to the iLO configuration during system boot.

Hewlett Packard Enterprise recommends enabling this feature.

Secure Boot

The **UEFI Secure Boot** option is disabled. In this configuration, the UEFI system firmware skips validation for the boot loader, Option ROM firmware, and other system software executables for trusted signatures. It breaks the chain of trust established by iLO from power-on.

Hewlett Packard Enterprise recommends enabling this feature.

For more information, see the UEFI System Utilities documentation (**https://www.hpe.com/support/hpeuefisystemutilities-quicklinks**).

Security Override Switch (iLO 5 and iLO 6 only)

The server Security Override Switch (also called the System Maintenance Switch) is enabled. This configuration is a risk because login authentication is not required when the Security Override Switch is enabled.

Hewlett Packard Enterprise recommends disabling this feature.

For more information, see the iLO user guide (**https://www.hpe.com/support/hpeilodocs-quicklinks**).

SNMPv1 Request

SNMPv1 Request is enabled. This configuration allows iLO to receive SNMPv1 requests. Enabling SNMPv1 Request increases the system vulnerability to attack.

Hewlett Packard Enterprise recommends disabling this feature.

Global Component Integrity (iLO 6 and iLO 7 only)

SPDM authentication is enabled. This configuration allows iLO to authenticate all applicable components in the server using SPDM. Disabling the **Global Component Integrity** option will change the iLO security status to risk.

If **Global Component Integrity** is disabled, iLO does not validate the components for SPDM authentication and SPDM supported cards are reported as `Not Supported`.

More information

Security dashboard

Security audits

Many companies have policies that mandate periodic security audits. iLO has event logs containing date- and time-stamped information about events that occurred in the iLO configuration and operation. You can access the logs in the iLO web interface. You can use the iLO RESTful API to set up an automated examination and extraction process that parses the logs by date, time, and authenticated user for accessing information about security events.

Security Log

The security log provides a record of the security events recorded by the iLO firmware.

Examples of the logged events include changes to the security configuration and security compliance issues. Other logged events include hardware intrusion, maintenance, and denial of service.

The security log provides a focused view of all recorded security events. Some of the same events are also included in the iLO event log or IML.

When the security log is full, each new event overwrites the oldest event in the log.

Remote console security

Remote console computer lock

Use this feature to automatically lock the OS or log out when a remote console session ends or the network link to iLO is lost. If you open a remote console window when this feature is enabled, the OS is locked when you close the window.

Integrated Remote Console trust settings (iLO 5 and iLO 6)

The .NET IRC is launched through Microsoft ClickOnce, which is part of the Microsoft .NET Framework. ClickOnce requires that any application installed from an SSL connection must be from a trusted source. If a browser is not configured to trust the iLO processor, and this setting is enabled, ClickOnce notifies you that the application cannot start.

Hewlett Packard Enterprise recommends installing a trusted SSL certificate and enabling the **IRC requires a trusted certificate in iLO** setting. In this configuration, the .NET IRC is launched by using an HTTPS connection.

If the **IRC requires a trusted certificate in iLO** setting is disabled, the .NET IRC is launched by using a non-SSL connection, which is insecure. In this configuration, SSL is used after the .NET IRC starts to exchange encryption keys. If you cannot install a trusted SSL certificate, and you do not want to use a non-SSL connection, you can use the Standalone remote console (HPLOCONS) or the HTML 5 Integrated Remote Console.

iLO encryption settings

HPE iLO Standard gives customers the ability to configure a server security state. The highest-level encryption capabilities of CNSA are supported with an iLO Advanced license.

As you move up the scale in security, the server enforces stronger encryption rules for web pages, SSH, and network communications. Both ends of each network connection must support the encryption rules, or they cannot communicate, and some interfaces are shut down to limit potential security threats.

iLO 7 security states

- Secure Standard
- FIPS
- CNSA
- Synergy Security Mode

iLO 5 and iLO 6 security states

- Production

- High Security
- FIPS
- CNSA
- Synergy Security Mode

Subtopics

iLO security states
Connecting to iLO when using CNSA mode
iLO 5 SSH cipher, key exchange, and MAC support
iLO 6 SSH cipher, key exchange, and MAC support
iLO 7 SSH cipher, key exchange, and MAC support
iLO 5 and iLO 6 SSL cipher and MAC support
iLO 7 SSL cipher and MAC support
FIPS validation and Common Criteria certification
Key management interoperability protocol

iLO security states

Production (iLO 5 and iLO 6 default)

When iLO is set to this security state:

- iLO uses the factory default encryption settings.
- The system maintenance switch setting to bypass iLO security (sometimes called the iLO Security Override switch) disables the password requirement for logging in to iLO.
- Remote console data uses AES-128 bidirectional encryption.

High Security (iLO 5, iLO 6) and Secure Standard (iLO 7 default)

When iLO is set to this security state:

- iLO enforces the use of AES ciphers over the secure channels, including secure HTTP transmissions through the following:
  - Browser
  - SSH port
  - iLO RESTful API

  Use a supported cipher to connect to iLO through these secure channels. This security state does not affect communications and connections over less-secure channels.

- User name and password restrictions for the following commands executed from the host system are enforced:
  - iLO RESTful API
- Remote console data uses AES-128 bidirectional encryption.
- You cannot connect to the server with network-based tools that do not support TLS 1.2 and TLS 1.3.
- On Gen10, Gen10 Plus, and Gen11 servers only: The system maintenance switch setting to bypass iLO security (sometimes called the iLO Security Override switch) does not disable the password requirement for logging in to iLO.

FIPS

The FIPS security state might be required for Common Criteria compliance, Payment Card Industry compliance, or other standards.

When iLO is set to this security state:

- iLO 5 2.73 and later, iLO 6 and iLO 7 operate in a mode intended to comply with the requirements of FIPS 140-3 level 1.

  Earlier versions of iLO 5 operate in a mode intended to comply with the requirements of FIPS 140-2 level 1.

  FIPS is a set of computer security standards that are mandated for use by United States government agencies and contractors.

  The FIPS security state is not the same as FIPS validated. FIPS validated refers to software that received validation by completing the Cryptographic Module Validation Program. For more information, see FIPS validation and Common Criteria certification.
- iLO enforces the use of AES ciphers over the secure channels, including secure HTTP transmissions through the following:
  - Browser
  - SSH port
  - iLO RESTful API

  Use a supported cipher to connect to iLO through these secure channels. This security state does not affect communications and connections over less-secure channels.
- User name and password restrictions for the following commands executed from the host system are enforced:
  - iLO RESTful API
- Remote console data uses AES-128 bidirectional encryption.

- You cannot connect to the server with network-based tools that do not support TLS 1.2 and TLS 1.3.
- On Gen10, Gen10 Plus, and Gen11 servers only: The system maintenance switch setting to bypass iLO security (sometimes called the iLO Security Override switch) does not disable the password requirement for logging in to iLO.

CNSA

The CNSA security state (previously called SuiteB mode) is available only when the FIPS security state is enabled.

When iLO is set to this security state:

- iLO operates in a mode intended to comply with the CNSA requirements defined by the NSA.
- iLO operates in a mode intended to secure systems that hold United States government top secret classified data.
- You cannot connect to the server with network-based tools that do not support TLS 1.2 and TLS 1.3.
- On Gen10, Gen10 Plus, and Gen11 servers, the system maintenance switch setting to bypass iLO security (sometimes called the iLO Security Override switch) does not disable the password requirement for logging in to iLO.
- Any software or utility that you use to connect to iLO must be CNSA-compliant.

  For example:

  - Firmware update utilities
  - SSH clients
  - HPE and third-party scripting and command-line tools
  - HPE and third-party management tools
  - AlertMail, syslog, LDAP, or key manager servers
  - Remote support software
- The iLO 7 firmware uses CNSA 2.0 signing algorithms - Leighton-Micali Signature (LMS).
- Firmware that is not LMS-signed cannot be flashed or uploaded to iLO 7 repository when the CNSA security state is configured.
- On servers with iLO 5 and iLO 6, use the HTML5 remote console instead of the .NET IRC. The HTML5 remote console enforces the use of AES-256 bit CNSA-compliant ciphers and the .NET IRC is not CNSA-compliant.

Synergy Security Mode

A special security state used by Composer 2. You cannot change the security state on a device that uses this mode.

More information

iLO 5 SSH cipher, key exchange, and MAC support
iLO 6 SSH cipher, key exchange, and MAC support
System maintenance switch

Connecting to iLO when using CNSA mode

When iLO is configured to use the CNSA security state, an AES 256 GCM cipher is required.

Web browser

Configure the browser to support TLS 1.2, TLS 1.3, or both and an AES cipher. If the browser is not using an AES cipher, you cannot connect to iLO.

Different browsers use different methods for selecting a negotiated cipher. For more information, see your browser documentation.

Log out of iLO through the current browser before changing the browser cipher setting. Any changes made to the cipher settings while you are logged in to iLO might enable the browser to continue using a non-AES cipher.

SSH connection

For information about setting the available ciphers, see the SSH utility documentation.

iLO RESTful API

Use a utility that supports TLS 1.2, TLS 1.3, or both and an AES cipher.

iLO 5 SSH cipher, key exchange, and MAC support

iLO provides enhanced encryption through the SSH port for secure CLP transactions.

Based on the configured security state, iLO supports the following:

Production

- AES256-CBC, AES128-CBC, 3DES-CBC, AES256-CTR, AEAD_AES_256_GCM, and AES256-GCM ciphers

- diffie-hellman-group-exchange-sha256, diffie-hellman-group14-sha1, diffie-hellman-group1-sha1, and ecdh-sha2-nistp384 key exchange
- hmac-sha1, hmac-sha2-256, and AEAD_AES_256_GCM MACs

FIPS or High Security

- AES256-CTR, AEAD_AES_256_GCM, and AES256-GCM ciphers
- diffie-hellman-group-exchange-sha256 and ecdh-sha2-nistp384 key exchange
- hmac-sha2-256 or AEAD_AES_256_GCM MACs

CNSA

- AEAD_AES_256_GCM and AES256-GCM ciphers
- ecdh-sha2-nistp384 key exchange
- AEAD_AES_256_GCM MAC

Synergy Security Mode

- AEAD_AES_256_GCM and AES256-GCM ciphers
- ecdh-sha2-nistp384 key exchange
- AEAD_AES_256_GCM MAC

iLO 6 SSH cipher, key exchange, and MAC support

iLO provides enhanced encryption through the SSH port for secure CLP transactions.

Based on the configured security state, iLO supports the following:

Production

- AES256-CBC, AES128-CBC, 3DES-CBC, AES256-CTR, AEAD_AES_256_GCM, and AES256-GCM ciphers
- diffie-hellman-group-exchange-sha256, diffie-hellman-group14-sha1, diffie-hellman-group1-sha1 key exchange, and ecdh-sha2-nistp384 key exchange
- hmac-sha1, hmac-sha2-256, and AEAD_AES_256_GCM MACs

FIPS or High Security

- AES256-CTR, AEAD_AES_256_GCM, and AES256-GCM ciphers

- diffie-hellman-group-exchange-sha256 and ecdh-sha2-nistp384 key exchange
- hmac-sha2-256 or AEAD_AES_256_GCM MACs

CNSA

- AEAD_AES_256_GCM and AES256-GCM ciphers
- ecdh-sha2-nistp384 key exchange
- AEAD_AES_256_GCM MAC

Synergy Security Mode

- AEAD_AES_256_GCM and AES256-GCM ciphers
- ecdh-sha2-nistp384 key exchange
- AEAD_AES_256_GCM MAC

iLO 7 SSH cipher, key exchange, and MAC support

iLO provides enhanced encryption through the SSH port for secure CLP transactions.

Based on the configured security state, iLO supports the following:

FIPS or Secure Standard

- aes256-ctr, aes256-gcm@openssh.com
- diffie-hellman-group-exchange-sha256, ecdh-sha2-nistp384
- hmac-sha2-256
- ssh-ed25519, rsa-sha2-512, rsa-sha2-256

CNSA

- aes256-gcm@openssh.com
- ecdh-sha2-nistp384
- hmac-sha2-256
- ecdsa-sha2-nistp384,rsa-sha2-512

Synergy Security Mode

- AEAD_AES_256_GCM and AES256-GCM ciphers

- ecdh-sha2-nistp384 key exchange
- AEAD_AES_256_GCM MAC

iLO 5 and iLO 6 SSL cipher and MAC support

iLO provides enhanced security for remote management in distributed IT environments. SSL encryption protects web browser data. Encryption of HTTP data provided by SSL ensures that the data is secure as it is transmitted across the network.

When you log in to iLO through a browser, the browser and iLO negotiate a cipher setting to use during the session. The negotiated cipher is displayed on the **Encryption** page.

The following lists of supported ciphers apply to all iLO SSL connections, including:

- connections to LDAP servers
- key manager servers
- SSO servers
- Insight Remote Support servers
- https:// URLs used in virtual media
- iLO RESTful API
- CLI commands
- iLO Federation group firmware updates

Based on the configured security state, iLO supports the following ciphers:

Production

- 256-bit AES-GCM with RSA, ECDH, and an AEAD MAC (ECDHE-RSA-AES256-GCM-SHA384)
- 256-bit AES with RSA, ECDH, and a SHA384 MAC (ECDHE-RSA-AES256-SHA384)
- 256-bit AES with RSA, ECDH, and a SHA1 MAC (ECDHE-RSA-AES256-SHA)
- 256-bit AES-GCM with RSA, DH, and an AEAD MAC (DHE-RSA-AES256-GCM-SHA384)
- 256-bit AES with RSA, DH, and a SHA256 MAC (DHE-RSA-AES256-SHA256)
- 256-bit AES with RSA, DH, and a SHA1 MAC (DHE-RSA-AES256-SHA)
- 256-bit AES-GCM with RSA, and an AEAD MAC (AES256-GCM-SHA384)
- 256-bit AES with RSA, and a SHA256 MAC (AES256-SHA256)

- 256-bit AES with RSA, and a SHA1 MAC (AES256-SHA)
- 128-bit AES-GCM with RSA, ECDH, and an AEAD MAC (ECDHE-RSA-AES128-GCM-SHA256)
- 128-bit AES with RSA, ECDH, and a SHA256 MAC (ECDHE-RSA-AES128-SHA256)
- 128-bit AES with RSA, ECDH, and a SHA1 MAC (ECDHE-RSA-AES128-SHA)
- 128-bit AES-GCM with RSA, DH, and an AEAD MAC (DHE-RSA-AES128-GCM-SHA256)
- 128-bit AES with RSA, DH, and a SHA256 MAC (DHE-RSA-AES128-SHA256)
- 128-bit AES with RSA, DH, and a SHA1 MAC (DHE-RSA-AES128-SHA)
- 128-bit AES-GCM with RSA, and an AEAD MAC (AES128-GCM-SHA256)
- 128-bit AES with RSA, and a SHA256 MAC (AES128-SHA256)
- 128-bit AES with RSA, and a SHA1 MAC (AES128-SHA)
- TLS1.3 256 bits AES_GCM with AEAD MAC (TLS_AES_256_GCM_SHA384)
- TLS1.3 128 bits AES_GCM with AEAD MAC (TLS_AES_128_GCM_SHA256)

High Security

TLS 1.2 or TLS 1.3 is required for these security states.

- 256-bit AES-GCM with RSA, ECDH, and an AEAD MAC (ECDHE-RSA-AES256-GCM-SHA384)
- 128-bit AES-GCM with RSA, ECDH, and an AEAD MAC (ECDHE-RSA-AES128-GCM-SHA256)
- TLS1.3 256 bits AES_GCM with AEAD MAC (TLS_AES_256_GCM_SHA384)
- TLS1.3 128 bits AES_GCM with AEAD MAC (TLS_AES_128_GCM_SHA256)

FIPS

TLS 1.2 or TLS 1.3 is required for these security states.

- 256-bit AES-GCM with RSA, ECDH, and an AEAD MAC (ECDHE-RSA-AES256-GCM-SHA384)
- 256-bit AES with RSA, ECDH, and a SHA384 MAC (ECDHE-RSA-AES256-SHA384)
- 128-bit AES-GCM with RSA, ECDH, and an AEAD MAC (ECDHE-RSA-AES128-GCM-SHA256)
- 128-bit AES with RSA, ECDH, and a SHA256 MAC (ECDHE-RSA-AES128-SHA256)
- TLS1.3 256 bits AES_GCM with AEAD MAC (TLS_AES_256_GCM_SHA384)
- TLS1.3 128 bits AES_GCM with AEAD MAC (TLS_AES_128_GCM_SHA256)

CNSA

TLS 1.2 or TLS 1.3 is required for this security state.

- 256-bit AES-GCM with ECDSA, ECDH, and an AEAD MAC (ECDHE-ECDSA-AES256-GCM-SHA384)
- Client only: 256-bit AES-GCM with RSA, ECDH, and an AEAD MAC (ECDHE-RSA-AES256-GCM-SHA384)
- TLS1.3 256 bits AES_GCM with AEAD MAC (TLS_AES_256_GCM_SHA384)

Synergy Security Mode

- 256-bit AES-GCM with ECDSA, ECDH, and an AEAD MAC (ECDHE-ECDSA-AES256-GCM-SHA384)
- Client only: 256-bit AES-GCM with RSA, ECDH, and an AEAD MAC (ECDHE-RSA-AES256-GCM-SHA384)
- TLS1.3 256 bits AES_GCM with AEAD MAC (TLS_AES_256_GCM_SHA384)

iLO 7 SSL cipher and MAC support

iLO provides enhanced security for remote management in distributed IT environments. SSL encryption protects web browser data. Encryption of HTTP data provided by SSL ensures that the data is secure as it is transmitted across the network.

When you log in to iLO through a browser, the browser and iLO negotiate a cipher setting to use during the session. The negotiated cipher is displayed on the **Encryption** page.

The following lists of supported ciphers apply to all iLO SSL connections, including connections to LDAP servers, key manager servers, SSO servers, Insight Remote Support servers, https:// URLs used in virtual media, the iLO RESTful API, and CLI commands.

The following lists of supported ciphers apply to all iLO SSL connections, including:

- Connections to LDAP servers
- Key manager servers
- SSO servers
- Insight Remote Support servers
- https:// URLs used in virtual media
- iLO RESTful API
- CLI commands

Based on the configured security state, iLO supports the following ciphers:

Secure Standard

TLS 1.2 or TLS 1.3 is required for these security states.

- 256-bit AES-GCM with RSA, ECDH, and an AEAD MAC (ECDHE-RSA-AES256-GCM-SHA384)
- 128-bit AES-GCM with RSA, ECDH, and an AEAD MAC (ECDHE-RSA-AES128-GCM-SHA256)
- TLS1.3 256 bits AES_GCM with AEAD MAC (TLS_AES_256_GCM_SHA384)
- TLS1.3 128 bits AES_GCM with AEAD MAC (TLS_AES_128_GCM_SHA256)

FIPS

TLS 1.2 or TLS 1.3 is required for these security states.

- 256-bit AES-GCM with RSA, ECDH, and an AEAD MAC (ECDHE-RSA-AES256-GCM-SHA384)
- 256-bit AES with RSA, ECDH, and a SHA384 MAC (ECDHE-RSA-AES256-SHA384)
- 128-bit AES-GCM with RSA, ECDH, and an AEAD MAC (ECDHE-RSA-AES128-GCM-SHA256)
- 128-bit AES with RSA, ECDH, and a SHA256 MAC (ECDHE-RSA-AES128-SHA256)
- TLS1.3 256 bits AES_GCM with AEAD MAC (TLS_AES_256_GCM_SHA384)
- TLS1.3 128 bits AES_GCM with AEAD MAC (TLS_AES_128_GCM_SHA256)

CNSA

TLS 1.2 or TLS 1.3 is required for this security state.

- 256-bit AES-GCM with ECDSA, ECDH, and an AEAD MAC (ECDHE-ECDSA-AES256-GCM-SHA384)
- Client only: 256-bit AES-GCM with RSA, ECDH, and an AEAD MAC (ECDHE-RSA-AES256-GCM-SHA384)
- TLS1.3 256 bits AES_GCM with AEAD MAC (TLS_AES_256_GCM_SHA384)

Synergy Security Mode

- 256-bit AES-GCM with ECDSA, ECDH, and an AEAD MAC (ECDHE-ECDSA-AES256-GCM-SHA384)
- Client only: 256-bit AES-GCM with RSA, ECDH, and an AEAD MAC (ECDHE-RSA-AES256-GCM-SHA384)
- TLS1.3 256 bits AES_GCM with AEAD MAC (TLS_AES_256_GCM_SHA384)

FIPS validation and Common Criteria certification

HPE iLO 7

The iLO 7 secure enclave is designed to meet the FIPS 140-3 Level 3 standards.

HPE ProLiant Compute Gen12 servers support the NIST and CNSA 2.0 quantum resistance requirement.



TIP

Watch future revisions to this document for information about iLO 7 FIPS validation and Common Criteria certification.

HPE iLO 6

- The cryptographic module for iLO 6 is in the evaluation process for FIPS 140-3 validation. For more information, see the **NIST Cryptographic Module Validation Program web page**.
- iLO 6 v1.11 is in the evaluation process for Common Criteria certification (EAL4+ (ALC_FLR.2). For more information, see the following website: **Products in evaluation**.

HPE iLO 5

iLO 5 v1.11 has attained the following:

- The cryptographic module for iLO 5 v1.11 is FIPS 140.2 Level 1 validated. See the NIST Cryptographic Module Validation certificate on the **NIST website**.
- iLO 5 v1.11 has passed Common Criteria certification and was awarded a Common Criteria certificate for conformance to EAL 2+ (ALC_FLR.2). See the certification report on the **Common Criteria** website.

  Check the following link for Common Criteria evaluation updates: **Products in evaluation**.
- iLO 5 v2.73 is in the evaluation process for Common Criteria certification (EAL4+ (ALC_FLR.2). For more information, see the following website: **Products in evaluation**.

Key management interoperability protocol

Key Management Interoperability Protocol (KMIP) is a standard communication protocol that defines how cryptographic keys and related objects are created, stored, accessed, and managed across systems. It provides a common, vendor-neutral interface between applications and key management systems, enabling consistent and interoperable key management.

Conceptually, KMIP follows a **client–server model**, where applications (clients) interact with a centralized key management server to perform operations such as key creation, retrieval, rotation, and deletion, ensuring secure and controlled handling of cryptographic material.

In enterprise environments, KMIP enables **centralized cryptographic governance**, simplifies key lifecycle management, and ensures **interoperability across heterogeneous systems and vendors**, eliminating reliance on proprietary key management approaches.

Within HPE environments, HPE iLO supports KMIP-based external key management, allowing integration with external key managers to control the complete lifecycle of encryption keys. KMIP replaces legacy proprietary mechanisms and aligns with enterprise security requirements for interoperability, compliance, and centralized key management.

For more information on key management, see **Remote key manager** topic in the iLO User Guide.

Kerberos authentication with iLO

Kerberos support enables a user to log in to iLO by clicking the **Zero Sign In** button on the login page instead of entering a user name and password. To log in successfully, the client workstation must be logged in to the domain, and the user must be a member of a directory group for which iLO is configured. If the workstation is not logged in to the domain, the user can log in to iLO by using the Kerberos UPN and domain password.

Because a system administrator establishes a trust relationship between iLO and the domain before user sign-on, any form of authentication (including two-factor authentication) is supported. For information about configuring a user account to support two-factor authentication, see the server OS documentation.

For more details on Configuring Kerberos authentication and directory configurations, see Setting up Kerberos authentication and directory services section in the iLO User Guide.

Schema-free directory authentication

When you use schema-free directory authentication, users and groups reside in the directory, and group privileges reside in the iLO settings. iLO uses the directory login credentials to read the user object in the directory and retrieve the user group memberships, which are compared to the group configuration in iLO. If the directory user account is verified as a member of a configured iLO directory group, iLO login is successful.

Advantages of schema-free directory integration

- Extending the directory schema is not required.
- Minimal setup is required for users in the directory. If no setup exists, the directory uses existing users and group memberships to access iLO. For example, if you have a domain administrator named User1, you can copy the DN of the domain administrator security group to iLO, and give it full privileges. User1 would then have access to iLO.

Disadvantage of schema-free directory integration

Group privileges are administered on each iLO system. This disadvantage has minimal impact because group privileges rarely change, and the task of changing group membership is administered in the directory and not on each iLO system. Hewlett Packard Enterprise provides tools that enable you to configure multiple iLO systems at the same time.

Configuration options

The schema-free setup options are the same, regardless of the method you use to configure the directory. You can configure the directory settings for minimum login flexibility, better login flexibility, or maximum login flexibility.

- **Minimum login flexibility**—With this configuration, you can log in to iLO by entering your full DN and password. You must be a member of a group that iLO recognizes.

  To use this configuration, enter the following settings:

  - **iLO 7**—The directory server DNS name or IP address and LDAP port. Typically, the LDAP port for an TLS connection is 636.
  - **iLO 5 and iLO 6**—The directory server DNS name or IP address and LDAP port. Typically, the LDAP port for an SSL connection is 636.
  - The DN for at least one group. This group can be a security group (for example, `CN=Administrators,CN=Builtin,DC=EXAMPLE,DC=COM` for Active Directory, or `UID=username,ou=People,dc=example,dc=com` for OpenLDAP) or any other group, as long as the intended iLO users are group members.

- **Better login flexibility**—With this configuration, you can log in to iLO by entering your login name and password. You must be a member of a group that iLO recognizes. At login time, the login name and user context are combined to make the user DN.

  To use this configuration, enter the minimum login flexibility settings and at least one directory user context.

  For example, if a user logs in as `JOHN.SMITH`, and the user context `CN=USERS,DC=EXAMPLE,DC=COM`, is configured, iLO uses the following DN: `CN=JOHN.SMITH,CN=USERS,DC=EXAMPLE,DC=COM`.

- **Maximum login flexibility**—With this configuration, you can log in to iLO by using your full DN and password, your name as it appears in the directory, the NetBIOS format (domain\login_name), or the email format (login_name@domain).

  To use this configuration, configure the directory server address in iLO by entering the directory DNS name instead of the IP address. The DNS name must be resolvable to an IP address from both iLO and the client system.

HPE Extended Schema directory authentication

Using the HPE Extended Schema directory authentication option enables you to do the following:

- Authenticate users from a shared, consolidated, scalable user database.
- Control user privileges (authorization) by using the directory service.
- Use roles in the directory service for group-level administration of iLO management processors and iLO users.

Advantages of HPE Extended Schema directory integration

- Groups are maintained in the directory, not on each iLO.
- Flexible access control—Access can be limited to a time of day or a certain range of IP addresses.

Subtopics

Directory services support

Directory services support

iLO software is designed to run with the Microsoft Active Directory Users and Computers snap-in, enabling you to manage user accounts through the directory.

iLO supports Microsoft Active Directory with the HPE Extended Schema configuration.

Firmware verification

The Firmware Verification feature allows you to view firmware scan results, set firmware scan policies, and run on-demand or scheduled system firmware scans.

System firmware scans detect invalid images and quarantine them when possible. Depending on the scan results, information is logged in the Active Health System Log and the Integrated Management Log.

To respond to detected issues, you can configure iLO to log the results, or log the results and attempt an automatic repair from the System Recovery Set.

Depending on the iLO version, scans support several firmware types. Some examples follow.

- iLO firmware
- System ROM (BIOS)
- System Programmable Logic Device (CPLD)
- Server Platform Services (SPS) firmware
- Innovation Engine (IE) firmware
- Server Platform Services Full Recovery Image
- Server Platform Services-IE Full Recovery Image
- Ampere System Control Processor



NOTE

Check the iLO user guide to verify the firmware types that your iLO version supports (**https://www.hpe.com/support/hpeilodocs-quicklinks**).

Subtopics

System Recovery Set

System Recovery Set

By default, a System Recovery Set is included with every server. The components included in the recovery set depend on the server configuration.

User accounts with the **Recovery Set** privilege can configure this install set and only one System Recovery Set can exist at a time.



NOTE

The Recovery Set privilege can be granted to iLO user accounts only from an active session that already possesses the Recovery Set privilege (such as the default iLO Administrator account). Only users with this privilege can update the System Recovery Set. If no user accounts possess the privilege, the Recovery Set cannot be altered without resetting iLO to the factory default settings.

If the default System Recovery Set is deleted, it can be recreated. Depending on the tools that the server supports, you can use the iLO RESTful API and the RESTful Interface Tool or SUM.

For more information, see the **SUM documentation** or the iLO user guide (**https://www.hpe.com/support/hpeilodocs-quicklinks**).

Table 1. Default System Recovery Set contents

Firmware	Intel servers	AMD servers	NVIDIA and Ampere servers
System ROM (BIOS)	X	X	X
iLO firmware	X	X	X
System Programmable Logic Device (CPLD)	X	X	X [1]
Innovation Engine (IE) [2]	X		
Server Platform Services (SPS) Firmware [3]	X		
Server Platform Services -IE Full Recovery Image [2]	X		
Server Platform Services Full Recovery Image [4]	X		

[1] Primary System Programmable Logic Device (CPLD) and Secondary System Programmable Logic Device (CPLD)
[2] Gen10/Gen10 Plus only
[3] Gen10, Gen10 Plus, Gen11 only
[4] Gen 11 only

More information

Firmware verification

iLO backup and restore

Automatic backup and restore

When iLO goes through the initialization process, it backs up the configuration information. If data corruption is detected, iLO tries to restore the configuration information from the backup file. Automatic restore operations are recorded in the IML.

The backup file created by the automatic backup and restore process is not user-accessible. It cannot be used to perform a manual restore operation.

When iLO security is disabled with the system maintenance switch (iLO 5 and iLO 6 only), the SRAM data is not restored automatically.

Manual backup and restore

iLO supports manually restoring the configuration information.

Hewlett Packard Enterprise does not expect that you will have a reason to perform a restore operation. However, there are cases in which having a backup of the configuration expedites the return to a normal operating environment.

As with any computer system, backing up your data is a recommended practice to minimize the impact from failures. Hewlett Packard Enterprise recommends performing a backup each time that you update the iLO firmware.

Security vulnerability scanners and iLO

Provides guidance for interpreting vulnerability scanner findings and reducing false-positive security concerns. It also contains links to technical whitepapers.

Security vulnerability scanners are used in server environments to probe for weaknesses that need to be investigated and addressed. The iLO team uses security vulnerability scanners in its quality labs for every iLO firmware release. There are known issues and best practices associated with the use of security vulnerability scanners. If the business requirements of your organization require vulnerability scans, remember that it is a security best practice to set the iLO security state to a higher mode.

It is a best practice to test new versions of security vulnerability scanners in a lab environment before deploying them in a production environment. By definition, a security vulnerability scanner probes interfaces for known or suspected vulnerabilities. In effect, the scanner is attempting to hack the interface being tested. This operation might have a negative impact on the stability of the system being scanned. Therefore, it makes sense to start on a small scale and then move to a wider scale and production environment.

There are some known issues that most security vulnerability scanners identify. These items are described in the following sections. For information about how to implement a solution, see the iLO user guide for your platform (**https://www.hpe.com/support/hpeilodocs-quicklinks**).

X.509 Certificate Subject CN Does Not Match the Entity Name

Replace the default, self-signed SSL certificate with a certificate signed by a Certificate Authority (CA). When iLO leaves the factory, the customer information and the server DNS name/IP address are unknown. Therefore, iLO uses a default self-signed certificate.

The iLO firmware provides the capability to create a Certificate Signing Request (CSR) that you can use to request a signed certificate from a CA. The signed certificate can then be imported into iLO.

IPMI 2.0 RAKP RMCP+ Authentication HMAC Password Hash Exposure

The IPMI handshake that is required in the IPMI specification should be more secure. IPMI is disabled by default in iLO. For customers who are not actively using IPMI, Hewlett Packard Enterprise recommends leaving the IPMI over LAN interface disabled.

A Security Bulletin for this issue is available at the following website: **https://www.hpe.com/support/iLO234-SB-CVE-2013-4786**.

Hewlett Packard Enterprise recommends the iLO RESTful API as a replacement for the IPMI over LAN capabilities. For more information about the iLO RESTful API and the RESTful Interface Tool, see **https://www.hpe.com/info/redfish** or **https://www.hpe.com/support/restfulinterface/docs**.

If you require the use of IPMI, enabling it will expose this issue.

Untrusted TLS/SSL server X.509 certificate

Replace the default, self-signed SSL certificate with a certificate signed by a Certificate Authority (CA). When iLO leaves the factory, the customer information and the server DNS name/IP address are unknown. Therefore, iLO uses a default self-signed certificate.

The iLO firmware provides the capability to create a Certificate Signing Request (CSR) that you can use to request a signed certificate from a CA. The signed certificate can then be imported into iLO.

IPMI 1.5 GetChannelAuth Response Information Disclosure

This is an assumed vulnerability based on Hewlett Packard Enterprise support of the IPMI protocol. iLO itself is not susceptible to this vulnerability. This vulnerability report can be suppressed by disabling IPMI.

TCP Sequence Number Approximation Vulnerability

iLO uses TCP sequence number randomization and is resistant to TCP sequence number approximation attacks. iLO is not susceptible to this vulnerability.

IPMI 2.0 RAKP RMCP+ Authentication Username Disclosure

The IPMI specification enables a preauthenticated client to confirm the existence of a configured username. Hewlett Packard Enterprise recommends changing the default username.

If you are not actively using IPMI, Hewlett Packard Enterprise recommends disabling the interface.

Weak cryptographic key

On servers with iLO 5 and iLO 6, this vulnerability can be addressed by setting the iLO security state to **High Security**. This action requires iLO to use higher grade ciphers.

This vulnerability will also be reported if the default SSL certificate is used.

The iLO firmware provides the capability to create a Certificate Signing Request (CSR) that you can use to request a signed certificate from a CA. The signed certificate can then be imported into iLO.

TCP timestamp response

This is a standard TCP behavior. The theory is that this can be used to estimate the uptime of the system, which could then be used for further attacks. This has a very low CVE vulnerability rating of 1.

Missing HTTPOnly Flag from Cookie

When a security scanner reports `Missing HTTPOnly Flag from Cookie` as a vulnerability, it refers to a client-side defense mechanism that prevents client-side script attacks (XSS) from accessing HTTP-only cookies. HTTP-only cookies do not prevent all XSS exploits, and using them is not a substitute for eliminating XSS vulnerabilities. This setting cannot be relied on because some browsers do not support it. The version of the browser will be different in each iLO configuration.

Hewlett Packard Enterprise has implemented ways of defending against XSS attacks. Refer to the iLO firmware download page for the latest available security enhancements. In addition, replace default self-signed certificates with trusted certificates signed by a Certificate Authority.

iLO does not use externally provided content such as trackers, scripts, or HTML from other servers. There is no page content within iLO that did not come from administrators. Therefore, the reported vulnerability `Missing HTTPOnly Flag from Cookie` is not a true vulnerability.

When scanning iLO products, ignore this error or disable scanning for `Missing HTTPOnly Flag from Cookie`.

Subtopics

Technical Whitepapers

Technical Whitepapers

Title and Link	Applicability
An Overview of Performance Metrics Supported HPE iLO	Applicable to HPE iLO 6 and HPE iLO 7
Using app accounts and virtual NIC in HPE iLO 7	Applicable to HPE iLO 7
Remote Key Manager Support for Ciphertrust Manager	Applicable to HPE iLO 6 and HPE iLO 7

UEFI System Utilities server management features

Provides security-related firmware settings that help control platform access and system behavior.

You can use the UEFI System Utilities to configure the Server Configuration Lock feature, manage server settings and behavior, and configure supported third-party solutions. For information about performing tasks with the UEFI System Utilities, see the online help or view the user guide for your platform (**https://www.hpe.com/support/hpeuefisystemutilities-quicklinks**).

Subtopics

Power-on password

Administrator password
HTTPS boot
Trusted platform module options
Advanced BIOS and platform security options

More information

HPE and third-party security solutions
Server Configuration Lock

Power-on password

Enabling the **Set Power On Password** feature causes a password prompt to display when you power on the server. The boot process will not continue until you enter the password.

To disable or clear the password, you can enter the password followed by a forward slash character (/).

NOTE

If an Automatic Server Recovery (ASR) reboot occurs, the power-on password prompt is not displayed and the server boots normally.

The default setting is **Disabled**.

When this feature is enabled, you can use the System Maintenance Switch to disable the password requirement.

More information

System maintenance switch

Administrator password

Enabling the **Set Admin Password** feature causes a password prompt to display when you try to access the UEFI System Utilities or UEFI Shell. The password is required before you can continue to the UEFI System Utilities or UEFI Shell. Three password attempts are allowed.

When this feature is enabled, you can use the System Maintenance Switch to disable the password requirement.

More information

System maintenance switch

HTTPS boot

You can configure the **HTTP support** and **TLS (HTTPS) Options** settings in the UEFI System Utilities to enable a server to use a TLS session to boot to an HTTPS URI. This option provides a more secure alternative to PXE booting. To enable HTTPS boot, you must enroll the HTTPS server TLS certificate.

When configured, HTTPS boot options are added to the UEFI boot order list for network ports that are enabled for network boot.

In addition to managing HTTPS server certificates, you can configure advanced security settings for this feature. The options include the cipher suite, certificate validation type, strict hostname checking, and TLS protocol version.

Trusted platform module options

You can view the current Trusted Platform Module (TPM) configuration and update the settings with the UEFI System Utilities.

For information about the options you can configure, see the user guide for your platform (**https://www.hpe.com/support/hpeuefisystemutilities-quicklinks**.

> **CAUTION**
>
> An OS that is using the TPM might lock all data access if you do not follow the proper procedures for modifying the server and suspending or disabling TPM in the OS. Following recommended procedures is important when updating system or option firmware, replacing hardware such as the system board and hard drive, and modifying TPM OS settings. Changing the TPM mode after installing an OS might cause issues, including data loss.

More information

Trusted Platform Module

Advanced BIOS and platform security options

Consider the following advanced options to enhance server security:

Platform Certificate Support

Enable or disable platform certificate support on Gen10 Plus and later products.

Allow login with iLO accounts

Allow users to log in to the ROM-based setup utility by using an iLO account with the Host BIOS privilege.

Backup ROM Image Authentication (iLO 5 and iLO 6 only)

Enable cryptographic authentication of the redundant ROM image at startup.

One-Time Boot Menu (F11 Prompt)

Enable or disable the F11 prompt during POST.

Intelligent Provisioning (F10 Prompt)

Enable or disable Intelligent Provisioning access.

UEFI Variable Access Firmware Control

Allow the system BIOS to control certain variables from being overwritten by other software such as the OS.

No-Execute Protection (iLO 5 and iLO 6 only)

Enable or disable data section non-execution protection.

Microsoft Secured-core Support (iLO 7)

Configure the server for **Microsoft Secured-core** Support. When enabled, various virtualization and security settings are automatically enabled.

Intel Boot Guard

Allow a system boot only with trusted firmware. This is a hardware-based security technology. Intel Boot Guard verifies the integrity and authenticity of the platform firmware (BIOS/UEFI) before execution.

Encryption and key management

Provides information about data-at-rest encryption and cryptographic key management solutions.

UEFI-managed encryption

UEFI-managed encryption allows data-at-rest encryption for supported system devices such as persistent memory modules and NVMe drives.

Self-encrypting drives

For storage devices that support the Opal Storage Specification, security is enhanced by making the storage device self-encrypting (SED). Self-encrypting drives encrypt stored data so that it cannot be read by an unauthorized user. The encryption keys are protected by a local master key (LMK) or through the use of a random master key (RMK).

For more information about self-encrypting drives, see **Self-encrypting drives**.

To view the HPE self-encrypting drive offerings, see the HPE ProLiant Compute SSD Selector Tool: **https://ssd.hpe.com/**.

HPE SR storage controllers

HPE SR controllers support controller-based encryption (CBE) and Self encrypting drives (SED).

CBE

HPE Smart Array SR Secure Encryption is a controller-based, enterprise-class data encryption solution that protects data at rest on RAID volumes. HPE Secure Encryption is compatible with all hard disk drives (HDDs) or solid-state drives (SSDs).

HPE Smart Array SR Secure Encryption is a FIPS 140-2 Level 1 enterprise-class encryption solution that complies with regulations for sensitive data, such as HIPPA and Sarbanes-Oxley.

SED

SED is another choice for data-at-rest encryption. It is an HDD or SSD that contains an Advanced Encryption Standard (AES) hardware encryption engine, which encrypts data at line rate as it is written to the storage media, and provides access control by locking the drive when power is lost. The media encryption key (MEK) encrypts all the user data on the drive. It is stored encrypted on the drive and it cannot be accessed by the user. The MEK is encrypted with a user password, also called a key encrypting key (KEK), which is used to unlock the drive. The KEK can be stored and managed by Host key management (HKM), Local key management (LKM), and Remote key management (RKM).

SED is ideal for customers who need their data protected with encryption. SEDs provide data-at-rest protection, which means that when power is lost (for example, when the server is turned off), the drive is locked. If someone steals a drive from a server, they cannot read any of the data from that drive. SED performs at line rate, so it does not impact overall server performance, which is critical for customers in the financial service industry (FSI), healthcare, and the U.S. government sectors.

Secure Encryption is available for both local and remote key management methodologies. The remote key management mode requires an iLO Advanced license, an HPE Smart Array SR Secure Encryption LTU, and a supported key management application.

For more information, see the HPE Storage controllers and server: data encryption overview at the following website: **https://www.hpe.com/info/SCEO**.

HPE MR storage controllers

HPE MR storage controllers support Self-Encrypting Drives (SED) that secure the drive data from unauthorized access or modification. Because the data on the drive is encrypted, it cannot be accessed without appropriate security authorization, even if an SED drive is removed from the storage system.

The following key management types are supported:

- **Host Key Management (HKM)**—Manage SEDs by using third-party key management such as SEDutil. SED monitoring is available in HPE MR Storage Administrator, the Storage Command Line Interface (StorCLI) tool, and the UEFI System Utilities.

- **Local Key Management (LKM)**—Enable SED drive security for local key management by using HPE MR Storage Administrator, the StorCLI tool, or the UEFI System Utilities. During setup, you provide a security key identifier and security key. At startup, the security key stored in the controller unlocks the drive. When the drive is powered off, the security-enabled drive data encryption key is locked.
- **Remote Key Management (RKM)**—The UEFI System Utilities works with the iLO key manager configuration to create the security key identifier and security key in the remote key manager server. When the drive is powered off, the security-enabled drive data encryption key is locked. At startup, the security key is retrieved from the remote key manager server to unlock the drive.

To view the controllers a server or compute module supports, see the QuickSpecs document at the following website: **https://www.hpe.com/info/qs**.

Remote key management

A remote key manager generates, stores, serves, controls, and audits access to data encryption keys. It enables you to protect and preserve access to business-critical, sensitive, data-at-rest encryption keys.

iLO manages the key exchange between the key manager and the other products. iLO uses a unique user account based on its own MAC address for communicating with the key manager. For the initial creation of this account, iLO uses a deployment user account that pre-exists on the key manager with administrator privileges. For more information about the deployment user account, see the key manager documentation.

The following key managers are supported. For version information, see the iLO user guide.

- Utimaco Enterprise Secure Key Manager (ESKM)
- Thales products:
  - Thales TCT KeySecure for Government G350v (previously known as SafeNet AT KeySecure G350v)
  - Thales KeySecure k150v (previously known as SafeNet KeySecure 150v)
  - Thales CipherTrust Manager 2.2.0 virtual (k170v) and physical (k570) appliances.

    Click here to read more about the partnership between HPE and Thales.

Advanced key management with iLO 7

Advanced Key Management in iLO 7 protects local keys by providing a secure repository for keys, certificates, and other server security assets. This feature is an improvement over using the TPM to encrypt local keys, because the keys are not stored in an exposed location.

Server lifecycle decommission or repurpose

Provides methods for securely erasing data before hardware disposal or reassignment.

When you decommission a product or decide to use it for a different purpose, you can securely erase the data by using the One-button secure erase (OBSE) or System Erase and Reset features.

> **CAUTION**
>
> Use the OBSE feature only when a system is being decommissioned. More importantly, proceed with extreme caution as using the OBSE feature will result in all accessible storage drives and volumes being securely erased.
>
> Similarly, use the System Erase and Reset feature only when a system is being decommissioned. Also proceed with extreme caution as using the System Erase and Reset feature will result in all internal and external storage drives and volumes accessible to the system being erased.

Subtopics

One-button secure erase
System Erase and Reset

One-button secure erase

If you want to decommission a server, you can use the One-button secure erase (OBSE) feature.

OBSE follows the NIST Special Publication 800-88 Revision 1 in the Guidelines for Media Sanitization guide. The appendix recommends minimum sanitization levels for media. For more information about the specification, see Section 2.5 **Guidelines for Media Sanitization**.

OBSE implements the NIST SP 800-88 Revision 1 Sanitization Recommendations for **Purging** user data and returns the server and supported components to the default state. This feature automates many of the tasks that you follow in the Statement of Volatility document for a server.

You can initiate the OBSE process from the following products:

- iLO—For details about the effects of using this feature, see the **iLO user guide** for your platform.
- Intelligent Provisioning—For more information, see the **Intelligent Provisioning user guide**.
- The iLO RESTful API—For more information, see **HPE server management with Redfish**.

- iLOREST (iLO 6)—For more information, see the **iLOrest user guide**.

> **CAUTION**
>
> Use the OBSE feature with extreme caution as such use will result in all accessible storage drives and volumes being securely erased.
>
> If you perform OBSE through Intelligent Provisioning v3.89 or earlier (Gen10, Gen10 Plus) or v4.32 or earlier (Gen11), there is no pop-up or any other type of warning displayed in the application.
>
> Prior to implementing the OBSE, it is critical to follow the instructions in Preserving data on drives or storage volumes that you do not want to erase. Failure to follow these instructions will result in all accessible storage-attached devices exposed to the server being securely erased. HPE will not be responsible for any loss arising from storage-attached devices being erased by using the OBSE feature.
>
> OBSE will securely erase any accessible storage-attached devices exposed to the server, including without limitation, storage disks, or volumes.
>
> Examples of such accessible storage volumes are the ones presented from an external SAN storage array or device. Another example is a D3940 on an HPE Synergy Frame.

Preserving data on drives or storage volumes that you do not want to erase

To preserve the data on drives or storage volumes that you do not want to erase:

- For rack systems, remove the physical cables, remove the server from the SAN zoning, or remove the server from the storage presentation prior to such use.
- For HPE Synergy or HPE BladeSystem c7000 blades with non-Virtual Connect SAN-managed connections, either remove the server from the SAN zoning or remove the server from the storage presentation prior to such use.
- In all cases, for HPE Synergy or HPE BladeSystem c7000, remove the server profile because this action ensures the removal of any Virtual Connect SAN-configured connections to any external storage. On a Synergy blade, this action removes any connection to D3940 storage.

One-button secure erase for DevIDs and System IAK

iLO IDevID, LDevID, System IDevID, and System IAK certificates are removed during the OBSE process.

When you use the OBSE process, Hewlett Packard Enterprise recommends performing a manual iLO backup to minimize the impact of losing the iLO IDevID, LDevID, System IDevID, and System IAK certificates. iLO includes all the certificates in its backup service and you can restore the certificates from the backup file.

Subtopics

One-button secure erase FAQ

One-button secure erase FAQ

Does One-button secure erase purge USB devices and internal SD cards?

No. One-button secure erase does not erase USB devices and internal SD cards.

If an HDD does not support the Purge function, does One-button secure erase attempt to purge it?

No. One-button secure erase skips a drive that does not support the purge function.

Does One-button secure erase support HPE Storage controllers?

HPE SR controllers, MR controllers, and NS controllers are supported for One-button secure erase.

Does One-button secure erase erase drives that do not support Purge?

RAID controllers can wipe drives (overwrite with a pattern) that do not support the purge operation. One-button secure erase does not request the controller to perform this nonsecure wipe. To wipe data on such drives, use the Intelligent Provisioning System Erase and Reset feature.

Does One-button secure erase erase battery-backed cache?

See the following table for more information.

How does One-button secure erase process the erase commands?

See the following table for information on how One-button secure erase purges or overwrites data.

What privileges are required to launch One-button secure erase?

Users need all iLO privileges to launch One-button secure erase.

Does One-button secure erase remove the serial number and product ID?

One-button secure erase does not erase these items.

How long does the process take?

The duration depends on the hardware. Sanitization of HDDs takes longer than SSDs.

How One-button secure erase affects supported drives

NOTE

Supported devices that fail the erase process and unsupported devices are not erased securely. These devices might contain sensitive data. Isolate devices that are not erased. Use other methods to delete the data or securely dispose of the devices according to your organization security policies.

Device	Operation requested	Result
NVRAM [1]	3-pass write: 0x5a, 0xa5, 0xff	All battery-backed iLO SRAM memory is overwritten.

Device	Operation requested	Result
Embedded Flash (NAND)	eMMC 5.1 (JEDEC 84-B51) Secure Erase command with SECURE_REMOVAL_TYPE in Extended CSD register set to physical memory erase, if supported by the device.	Data in physical memory is erased.
Intel Optane DC PMM	Secure Erase + Overwrite DIMM	Cryptographic keys are removed and data in all physical memory blocks (both user-accessible and in spare blocks) is overwritten with zeros. PCD regions containing all configuration and metadata is also overwritten.
NVDIMM-N [2]	JEDEC JESD245B Factory Default	Data in all physical memory blocks is erased except warranty information. All readable registers are reset to defaults.
UEFI configuration store	3-pass: Chip erase (0xff), 0x00, Chip erase (0xff)	All physical sectors are overwritten.
RTC	Reset time to 01-01-2001 00:00:00	Date, Time, Time zone, and DST are reset to defaults.
TPM	TPM Clear + Clear NV indices + Delete Platform Symmetric key	All data in TPM is cleared including any nonvolatile information.
HPE Smart Array SR controllers [3], [4] HPE Compute SR Controllers [5]	Delete Logical drives + Clear Configuration Metadata + Factory Reset + Physical drive sanitize **Note**: Before initiating the One-button secure erase, the Security reset function must be performed manually through the Smart Storage Administrator, if Smart Array Secure Encryption was enabled.	• The security reset function removes the drive keys that are stored on the key manager for remote key management. All secrets, keys, and passwords from the controller and drives are cleared. This operation does not remove the controller key on the key manager. • All array configurations, logical drives, and metadata are deleted. All controller settings are reset to their factory defaults. • Flash backup is cleared and data in the DRAM write-back cache is lost when the power is removed. • All attached drives are requested to be sanitized. See the following sectio

Device	Operation requested	Result
		ns for operations requested on the dri ves.
HPE Compute MR C ontrollers [6], [7]	Delete Logical drives + Clear Configuratio n Metadata + Factory Reset + Physical dri ve sanitize	• All array configurations, logical drives , and metadata are deleted. All control ler settings are reset to their factory d efaults. Encryption keys are cleared. • Flash backup is cleared and data in th e DRAM write-back cache is lost whe n the power is removed. • All attached drives are requested to be sanitized. See the following sectio ns for operations requested on the dri ves.
HPE NS204i Boot C ontrollers [8]	Delete Logical drives + Clear Configuratio n Metadata + Factory Reset + Physical dri ve sanitize	• All array configurations, logical drives , and metadata are deleted. All control ler settings are reset to their factory d efaults. • All attached drives are requested to be sanitized. See the following sectio ns for operations requested on the dri ves.
HPE Smart Array S 100i and SR100i So ftware RAID [2]	Reset to SATA AHCI mode + Physical dri ve sanitize	The controller is reset to the default SATA AHCI mode. All attached SATA drives are requested to be sanitized as described in the following sections.
SATA HDD [9]	ATA SANITIZE with CRYPTO SCRAMBLE EXT if supported.	The CRYPTO SCRAMBLE EXT command changes the internal encryption keys that are used for user data, so the user data is irretrievable.
	A single pass of ATA SANITIZE with OVER WRITE EXT option	All physical sectors are overwritten with zeros, including physical sectors that are not user-accessible. Any previous data in caches are also made inaccessible.

Device	Operation requested	Result
SATA SSD [9]	ATA SANITIZE with CRYPTO SCRAMBLE EXT if supported.	The CRYPTO SCRAMBLE EXT command changes the internal encryption keys that are used for user data, so the user data is irretrievable.
	A single pass of ATA SANITIZE with BLOCK ERASE option	Previous data in all physical memory blocks, including physical memory blocks that are not user-accessible, becomes irretrievable. Any previous data in caches are also made inaccessible.
SAS HDD [6], [10]	CRYPTOGRAPHIC ERASE (if supported)	The CRYPTOGRAPHIC ERASE command changes the internal encryption keys that are used for user data, so the user data is irretrievable.
	A single pass of SCSI SANITIZE with OVERWRITE EXT option	All physical sectors are overwritten, including physical sectors that are not user-accessible. Any data in caches are also sanitized.
SAS SSD [6]	CRYPTOGRAPHIC ERASE (if supported)	The CRYPTOGRAPHIC ERASE command changes the internal encryption keys that are used for user data, so the user data is irretrievable.
	A single pass of SCSI SANITIZE with BLOCK ERASE option	All physical memory blocks, including physical memory blocks that are not user-accessible, are set to a vendor-specific value. Any data in caches are also sanitized.
NVM Express	NVM Express FORMAT with Secure Erase Setting (SES) = 2, if supported.	This process is a cryptographic erase accomplished by deleting the encryption key.
	NVM Express SANITIZE if supported (for drives supporting NVM Express version 1.3 or later) A single pass of NVM Express FORMAT with SES = 1. This option is used if the drive does not support the SANITIZE.	All data and metadata associated with all namespaces is destroyed. All user content present in the NVM subsystem is erased.

[1] Applies to iLO 5 and iLO 6
[2] Applies to iLO 5
[3] Gen10 and Gen10 Plus
[4] For the HPE Smart Array E208e-p SR Gen10 controller installed in a Gen11 or later server, OBSE is not supported for sanitizing drives (D3000 enclosure only) and factory resetting the controller. As an

alternate to using one-button secure erase, you can use the Redfish `#Storage.ResetToDefaults` and `#Drive.SecureErase` actions.

5 Gen 11 and later

6 HPE MR controllers do not support one-button secure erase on Gen 10 servers.

7 HPE MR controllers support one-button secure erase only for drives that support Crypto Erase (CRYTO SCRAMBLE EXT for SATA, CRYPTOGRAPHIC ERASE for SAS, and Crypto Erase for NVMe). One-button secure erase for self-encrypting drives (SED) is not supported.

8 One-button secure erase for self-encrypting drives (SED) is not supported on NS204i controllers.

9 These drives might be connected to HPE SR controllers and MR controllers or the Chipset SATA controller.

10 HPE MR controllers support only CRYPTOGRAPHIC ERASE.

System Erase and Reset

The System Erase and Reset action is initiated from Intelligent Provisioning or the ROM-based setup utility (RBSU). It clears hard drives and Intelligent Provisioning preferences.

This feature securely erases all data on all accessible storage disks or volumes using the guidelines from DoD 5220.22-M, which is similar to the NIST description of clearing data. All block devices attached to the system are overwritten by applying random patterns in a three-pass process. These block devices include drives attached to the server. Depending on the amount of storage installed on a system, the overwrite process can take many hours or even days to complete. Use this method to select and erase drives on the system that do not support the native sanitize methods used by the One-button secure erase process.

CAUTION

Use the System Erase and Reset feature with extreme caution as such use will result in all internal and external storage drives and volumes accessible to the system being erased.

If you use the System Erase and Reset feature through Intelligent Provisioning v3.89 or earlier (Gen10, Gen10 Plus) or v4.32 or earlier (Gen11), there is no pop-up or any other type of warning displayed in the application.

Prior to implementing the System Erase and Reset, it is critical to follow the instructions in Preserving data on drives or storage volumes that you do not want to erase. Failure to follow these instructions will result in all accessible storage-attached devices exposed to the server being erased. HPE will not be responsible for any loss arising from storage-attached devices being erased by using the System Erase and Reset feature.

System Erase and Reset will securely erase any accessible storage disk or volume, including without limitation, FCOE, iSCSI, SAN, NVMe, SAN-attached, and direct-attached storage.

Examples of such accessible storage volumes are the ones presented from a SAN storage frame. Other examples include a D3940 on an HPE Synergy Frame.

For more information, see the **Intelligent Provisioning user guide**.

Preserving data on drives or storage volumes that you do not want to erase

To preserve the data on drives or storage volumes that you do not want to erase:

- For rack systems that support Intelligent Provisioning with external storage, remove the physical cables, remove the server from the SAN zoning, or remove the server from the storage presentation prior to such use.
- For HPE Synergy or HPE BladeSystem c7000 blades with non-Virtual Connect SAN-managed connections, either remove the server from the SAN zoning or remove the server from the storage presentation prior to such use.
- In all cases, for HPE Synergy or HPE BladeSystem c7000, remove the server profile because this action ensures the removal of any Virtual Connect SAN-configured connections to any external storage. On a Synergy blade, this action removes any connection to D3940 storage.

HPE OneView security

Provides security features and controls available through HPE OneView management solutions.

HPE OneView is a single integrated platform, packaged as an appliance, that implements a software-defined approach to managing your physical infrastructure through its entire life cycle.

HPE OneView has the following security features:

- Mandatory access control through:
  - Local or network/LDAP accounts
  - Passwords
  - Granular permissions (role and scope)
  - Audit logs
  - Two-factor authentication
- Uses certificates to authenticate and establish trust relationships.
- Is supported with regular updates from HPE.

Additionally, HPE OneView is delivered as a security-hardened appliance with the following features:

- The appliance uses a customized operating system that eliminates all nonessential services to reduce its attack surface.
- Minimizes vulnerabilities by running only the services required to provide functionality.
- Password protected OS boot loader.

- An IP firewall that only allows access to the ports required by HPE OneView services.
- Key services do not run as privileged OS uses.
- No users are allowed at the OS level. Users can interact with HPE OneView strictly through RESTful APIs, the state change message bus (AMPQ interface), SSH or appliance console for maintenance, or through the web interface.

The subsequent Security chapter covers all the aspects related to HPE OneView security. For more information, see the documentation at **http://www.hpe.com/info/OneView/docs**.

Subtopics

HPE OneView Security features
HPE OneView Audit log
HPE OneView certificate
Complex passwords
Two-factor authentication
Algorithms and protocols for securing the appliance
Directory service authentication
Firewall ports required for HPE OneView
Best practices for maintaining a secure appliance

HPE OneView Security features

- HPE OneView offers options to configure management appliances to be compliant with the Federal Information Processing Standard (FIPS)-140-3 (FIPS 140-3) and Commercial National Security Algorithm (CNSA) standards, or to continue using the legacy cryptography mode. In the FIPS 140-3 and CNSA mode, the appliance restricts protocol versions, cipher suites, and digital certificate strength to FIPS 140-3 and CNSA-compliant ones, respectively.
- Use of certificates for authentication over TLS.
- Customizable TLS versions - REST API to selectively disable TLS1.0 and TLS1.1.
- Separation of the data and management environments, which is critical to protect against Denial of Service attacks.
- Two-factor authentication that provides authentication using smart cards.
- Certificate management to improve the policies and procedures for managing certificate-based trust.
- Generate a self-signed certificate when authentication by a certificate authority is not required or available.

- An automated remote backup feature that allows you to set the day and time a backup will be performed. Also, the ability to specify a remote SSH or SFTP server to store the backup files automatically.
- Generate a Certificate Signing Request (CSR) for a certificate that establishes the authenticity of your public keys and verifies them through a certificate authority.
- View certificate settings.
- Support for authentication and authorization using an optional directory service such as Microsoft Active Directory.
- Install a Hewlett Packard Enterprise public key to validate the authenticity and integrity of files delivered as part of the HPE OneView update process. If the key expires or revokes, you can download the current key from **Hewlett Packard Enterprise home page** and upload it into the appliance.

HPE OneView Audit log

The audit log contains a record of actions performed on the appliance, which you can use for individual accountability. Because the logs are rolled over periodically to prevent them from getting too large, Hewlett Packard Enterprise recommends downloading the audit logs to monitor the actions being performed. You can also download the audit logs periodically to maintain a long-term audit history.

Each user has a unique logging ID per session, enabling you to follow a user's trail in the audit log. Some actions are performed by the appliance and might not have a logging ID.

A breakdown of an audit entry follows:

Token	Description
Date/time	The date and time of the event
Internal component ID	The unique identifier of an internal component
Reserved	The organization ID. Reserved for internal use
User domain	The login domain name of the user
User name/ID	The user name
Session ID	The user session ID associated with the message
Task ID	The URI of the task resource associated with the message

<table>
<tr><th>Token</th><th>Description</th></tr>
<tr><td>Client host/IP</td><td>The client (browser) IP address identifies the client machine that initiated the request</td></tr>
<tr><td>Result</td><td>The result of the action, which can be one of the following values:
SUCCESS
FAILURE
SOME_FAILURES
CANCELED
KILLED</td></tr>
<tr><td>Action</td><td>A description of the action, which can be one of the following values:<table><tr><td>ADD
MODIFY
DELETE
ACCESS
RUN</td><td>LIST
ENABLE
DISABLE
SAVE
SETUP</td><td>UNSETUP
DEPLOY
START
DONE
KILLED</td><td>CANCELED
LOGIN
LOGOUT
DOWNLOAD_START</td></tr></table></td></tr>
<tr><td>Severity</td><td>A description of the severity of the event, which can be one of the following values, listed in descending order of importance:
INFO
NOTICE
WARNING
ERROR
ALERT
CRITICAL</td></tr>
<tr><td>Resource category</td><td>For REST API category information, see the HPE OneView API Reference Guide.</td></tr>
<tr><td>Resource URI/name</td><td>The resource URI/name associated with the task</td></tr>
<tr><td>Message</td><td>The output message that appears in the audit log</td></tr>
</table>

HPE OneView certificate

An FIPS-compliant SHA-256 certificate with 2048-bit key length is the default HPE OneView appliance certificate in a VM appliance as well as an HPE Synergy Composer.

Appliance self-signed certificate

Self-signed certificate is the default certificate that an appliance generates; it is not issued by a trusted certificate authority. By default, browsers do not trust self-signed certificates because they lack prior knowledge of them. The browser displays a warning dialog box; you can use it to examine the content of the self-signed certificate before accepting it.

Do not use a self-signed certificate without examining it before accepting it into your browser. Hewlett Packard Enterprise recommends that you create a signed certificate for use with the appliance. However, if you choose to use a self-signed certificate, accept the certificate into all the browsers that will be used to access the appliance. If PowerShell scripts use the HPE OneView REST API, extra code is required which leaves the scripts open to attackers using self-signed certificates

CA-signed appliance certificate

Use a trusted CA (certificate authority) to authenticate and establish trust relationships. If the browser is configured to trust the CA, certificates signed by the CA are also trusted. A CA can be of the following two types:

- Internal - Operated and maintained by your organization.
- External - Operated and maintained by a third party.

For more information on certificates and various other tasks related to certificate, see Certificate Management in HPE OneView User Guide.

Complex passwords

Complex password requirements are enforced when users change their password or create user accounts. Complex password rules apply only for the local users configured in HPE OneView. For authentication directory service users, the authentication directory configuration determines the password complexity rules.

For more information on complex passwords, see HPE OneView User Guide.

Two-factor authentication

Passwords alone, regardless of their complexity, might not provide adequate security for many applications. To enhance security, HPE OneView supports two-factor authentication (2FA), which requires two forms of verification: something the user possesses (such as a smart card) and something the user knows (such as a personal identification number (PIN).

For remote access methods, such as SSH, or user logins, two-factor authentication can also be configured to use non-default ports by specifying the appropriate port number in the server settings.

When two-factor authentication is enabled, users can authenticate to HPE OneView using smart cards, such as Common Access Cards (CAC) or Personal Identity Verification (PIV) cards. The browser-based smart card reader plugin reads the card and accesses its certificate using the PIN provided by the user. The browser then presents the embedded client certificate to HPE OneView.

To be trusted, the client certificate must be signed by a root or intermediate Certificate Authority (CA) that has been imported into HPE OneView. HPE OneView validates the certificate and verifies that the user identity specified in the certificate corresponds to a valid user account recognized through its configured directory service.

For more information on two-factor authentication and its configuration, see **Two-factor authentication**.

Algorithms and protocols for securing the appliance

The management platform provides options to operate in compliance with recognized security and cryptographic standards or to continue using a legacy cryptography mode. When compliance modes are

enabled, the platform restricts supported protocol versions, cipher suites, and digital certificate strengths to those that meet the requirements of the selected security standard.



NOTE

- Turning on FIPS may disable old APIs that are incompatible with the heightened security mode.
- The CNSA-compliant cipher suites are a subset of the FIPS-compliant cipher suites that meet the more stringent security requirements of the CNSA specifications.

HPE OneView uses the following FIPS 140-3-validated modules for cryptographic operations:

- Hewlett Packard Enterprise SSL Cryptographic Module (Certificate number 3018)
- Hewlett Packard Enterprise NSS Cryptographic Module (Certificate number 2908)
- Hewlett Packard Enterprise Libgcrypt Cryptographic Module (Certificate number 2915)
- Hewlett Packard Enterprise Java Cryptographic Module (Certificate number 3138)

HPE OneView uses the following communication protocols and services that rely on the FIPS-validated cryptographic modules:

- Transport Layer Security (TLS) communication
  - OpenSSL, Apache, and cURL: Uses underlying FIPS 140-2-validated OpenSSL Cryptographic Module
  - Java: Uses underlying FIPS 140-2-validated Java Cryptographic Module
  - RabbitMQ: Uses underlying FIPS 140-2-validated OpenSSL Cryptographic Module
  - Mozilla Firefox: Uses underlying FIPS 140-2-validated NSS Cryptographic Module
  - Digital signature algorithms: Uses underlying FIPS 140-2-validated OpenSSL and Java Cryptographic Modules
  - Public key algorithms: Uses underlying FIPS 140-2-validated OpenSSL and Java Cryptographic Modules
- SNMP communication

- Server management: Uses SNMP4J libraries for SNMP communications. SNMP4J uses standard Java Cryptography Extension (JCE) hashing and encryption algorithms provided by the FIPS 140-2-validated JCE.
- Interconnect management: Uses underlying FIPS-140-2-validated OpenSSL Cryptographic Module.

- SSH communication
  - OpenSSH: Uses underlying FIPS 140-2 validated OpenSSL Cryptographic Module
- RPM signature validation: Uses underlying FIPS 140-2-validated Libgcrypt Cryptographic Module

A cipher suite is a set of algorithms that help secure a network connection that uses TLS for communication. The set of algorithms that cipher suites usually contain include: a key exchange algorithm, a bulk encryption algorithm, and a Message Authentication Code (MAC) algorithm.

For more information on Cipher suites, see **Protocols supported by the appliance**.

Directory service authentication

You can configure HPE OneView to use an external enterprise directory service for user authentication. HPE OneView supports the following enterprise directory services:

- Active Directory
- OpenLDAP

The display name of the directory service used in the HPE OneView login page appears on the Add/Edit Directory configuration details page. This name indicates the enterprise directory that it is associated with. Directory groups are assigned one or more HPE OneView permissions. The permissions assigned to a directory user are the cumulative set of permissions granted through all directory groups of which the user is a member. Only after permissions are defined for directory groups, directory users are authenticated into the appliance.

For more information, see Directory service authentication in the HPE OneView User Guide.

Firewall ports required for HPE OneView

HPE OneView requires specific ports to be available to the appliance to manage servers, enclosures, and interconnects.

Port number	Protocol	Use	Description
7	TCP	Outbound	Used for a reachability check of TCP echo (ping) to HPE iLO.
22	TCP	Inbound and Out bound	Used for SSH and SFTP. SSH is required to communi cate with HPE Virtual Connect interconnect modules. S FTP is required for actions such as firmware upgrades a nd support dumps.
53	UDP and TC P	Outbound	Used for DNS client queries.
80	TCP	Outbound	Used for HTTP communication to Brocade FOS for SAN management.
123	UDP	Inbound	HPE OneView acts as an NTP server and HPE iLO requi res access.
123	UDP	Outbound	Used as an NTP client to synchronize the appliance tim e.
161	UDP	Outbound	Supports SNMP GET calls to monitored and managed d evices, such as, server HPE iLO, and SAN Managers.
162	UDP	Inbound and Out bound for trap f orwarding from HPE OneView	Used for SNMP trap support from the HPE iLO.
443	TCP	Inbound	Used for the HTTPS interface to UI and APIs. This port i s used by iSUT for VMware ESXi to connect to the HPE OneView web server.
443	TCP	Outbound	Used for secure SSL access to the HPE iLO, Frame Lin k Module, remote support access to Hewlett Packard En terprise, and other devices. Used for Redfish, RIBCL, and SOAP. Used by HPE OneVi ew hypervisor managers for hypervisor clusters or the p rofiles
443	TCP	Outbound	Used for HTTPS communication to Brocade FOS for SA N management. Used for HTTPS communication to HPE Primera/HPE A lletra 9000/HPE Alletra Storage MP.

Port number	Protocol	Use	Description
636	TCP	Outbound	Secure LDAP. Used for enterprise directory integration (Microsoft Active Directory, OpenLDAP)
2162	UDP	Inbound	Used as an alternative SNMP trap port.
3269	TCP	Outbound	Used for Microsoft Active directory LDAP global catalog port.
3512	TCP	Inbound and Out bound	Used for VMware vCenter and HPE OneView for VMwa re vCenter plugin communication.
5989	TCP	Outbound	Port for CIM (Common information Model) Server (HTT PS). Used to get information from ESXi host.
5392	TCP	Outbound	Used for HTTPS communication to HPE Nimble Storag e/HPE Alletra 5000/6000.
5671	TCP	Inbound	Allows external scripts or applications to connect to an d monitor messages from the SCMB (State-Change Mes sage Bus).
8080	TCP	Outbound	Used for HTTP/HTTPS communication to HPE 3PAR StoreServ Storage WSAPI storage systems.
17988	TCP	iLO Integrated R emote Console t o HPE iLO	iLO IRC initiating a connection to the HPE iLO.
17990	TCP	Browser to HPE i LO	Provides browser access to the iLO IRC.
8443	TCP	Inbound	Used for two-factor authentication

Best practices for maintaining a secure appliance

Most security policies and practices used in a traditional environment apply in a virtualized environment. However, in a virtualized environment, these policies might require modifications and additions.
The following table comprises a partial list of security best practices that Hewlett Packard Enterprise recommends in both physical and virtual environments. Security best practices differ by customer and their specific or unique requirements. No one set of best practices is applicable for all customers.

Topic	Best Practice
Access	• Control access to the appliance ◦ Allow HPE Services access • Disable access to the Hardware setup feature so that an installation technician cannot access the console
Accounts	• Limit or disable the number of local accounts. Integrate the appliance with an enterprise directory solution such as Microsoft Active Directory or OpenLDAP. Use the enterprise directory features for password expiration, complexity, history, and to disable local users and groups. • If local accounts are used, protect the built-in administrator account with a strong password. • Do not use the built-in Administrator account. All users must log in using their own credentials to facilitate auditing.
Audit logs	• Download the appliance audit logs at regular intervals.
Certificates	• Use certificates signed by a trusted certificate authority (CA). HPE OneView uses certificates to authenticate and establish trust relationships. One of the most common uses of certificates is when a connection from a web browser to a web server is established. The machine-level authentication is carried out as part of the HTTPS protocol, using SSL. Certificates can also be used to authenticate devices when setting up a communication channel. The appliance supports self-signed certificates and certificates signed by a CA. The appliance is initially configured with self-signed certificates for the web server and the State Change Message Bus (SCMB). The same CA-signed appliance certificate used to secure access to HPE OneView is also used for the SCMB server certificate. A client certificate is not available for SCMB by default, but can be generated from the internal HPE OneView CA or through another trusted CA. Hewlett Packard Enterprise advises customers to examine their security needs (that is, to perform a risk assessment) and consider the use of certificates signed by a trusted CA.

- You should use your company's existing custom CA and import their trusted certificates. The trusted root CA certificate must be deployed to both HPE OneView and to the hardware devices that HPE OneView manages. HPE OneView performs the CA-based certificate validation. All the devices that you are connecting to must have certificates that are trusted by that root CA.
- If your company does not have its own certificate authority, consider using a commercial CA. There are numerous third-party companies that provide trusted certificates. You will need to work with the external CA to have certificates generated for specific devices and systems and then import these trusted certificates into the components that use them.

As the Infrastructure administrator, you can generate a certificate signing request (CSR) and, upon receipt, upload the certificate to the appliance web server. This action ensures the integrity and authenticity of your HTTPS connection to the appliance. Certificates can also be uploaded for the SCMB.

The following considerations apply when you are looking to replace a self-signed certificate with a commercial CA-signed certificate:

- Determine if you want to use commercial CA certificates for all the devices in your environment, or just the appliance web server certificate.
- Determine if you want to use a public key infrastructure (PKI) to generate your own CA-signed certificates, or purchase commercial CA-signed certificates for all your managed devices.
- For the appliance web server certificate, you must request the CA to include the following:
  - Key usage with digital signature.
  - Key encipherment values.
  - You do not need an **Extended Key Usage** extension to create a valid CA-signed certificate. However, if the certificate contains an **Extended Key Usage** extension, it must contain both the `Server Authentication` and `Client Authentication` as the values.
  - Basic Constraints for **Subject Type** with **End Entity** as the value.
  - Expiration or validity of the certificates: Frequently expiring commercial certificates are difficult to manage. Therefore, Hewlett Packard Enterprise recommends a minimum validity period of one to two years.

Topic	Best Practice
	◦ The **Subject Alternative Name** contains either the host (fully qualified domain name) or resolved IP Address.  **NOTE** Wildcard characters in **Subject Alternative Name** of the applian ce web server certificate are not supported. • Anytime the IP address or hostname of the appliance changes, any CA-signed appli ance certificate associated with the appliance is erased, and a new self-signed appli ance certificate is generated. In this case, you must generate a new CSR, have it sign ed by a CA, and import it into the appliance. • If a commercial CA has a chain, such as, root CA and other intermediate CAs, you mu st load all the certificates in the chain to HPE OneView as the appliance expects all t hose certificates to be trusted. • The maximum number of certificates that can be present in the certificate chain is n ine. The appliance fails to connect to any device or server if it has a certificate chai n depth higher than the maximum limit. The maximum certificate chain depth is set by default on the appliance, and cannot be customized by the user. • If you want to perform certificate revocation checks, you must set up Certificate Revocation Lists (CRLs) from the CAs, and refresh them periodically.
Network	• Hewlett Packard Enterprise recommends creating a private management LAN and keeping that separate, known as air-gapped, from production LANs, using VLAN or f irewall technology (or both). ◦ **Management LAN** Grant management LAN access to authorized personnel only. For example, Infra structure administrators, Network administrators, and Server administrators. ◦ **Production LAN** Connect all NICs for managed devices to the production LAN. • If you require inbound Internet access, use a corporate virtual private network (VPN) that provides firewall protection. For outbound Internet access (for example, for Re mote Support), use a secured web proxy.
Passwords	• Hewlett Packard Enterprise recommends that you integrate HPE OneView with an enterprise directory such as Microsoft Active Directory or OpenLDAP and disable l

Topic	Best Practice
	ocal HPE OneView accounts, except for the Maintenance Console. Your enterprise di rectory can then enforce common password management policies such as password lifetime, password complexity, and minimum password length. • The appliance maintenance console uses a local administrator account. Hewlett Pac kard Enterprise recommends that you set a password for appliance maintenance co nsole access.
Permissions	Permissions are used to control user access to the appliance and the resources manage d by the appliance. The Infrastructure administrator grants rights to users and directory groups by assigning permissions. A permission consists of a role and an optional scope. The role grants access to resource categories. • **Role:** HPE OneView defines a set of roles that describe the actions a user can perfo rm on resource categories. When assigned to a user or directory group, a role grants the right to perform actions on categories of resources managed by the appliance. T he Infrastructure administrator role should be reserved for the highest access. • **Scope:** Define a scope and assign a subset of resources representing the manageme nt domain of one or more users. A scope in a permission further restricts the rights granted by the role to particular resource instances. Thus, it is appropriate to use a c ommon scope in permissions for users with differing roles.
Two-factor auth entication	HPE OneView supports two-factor authentication. Deploy the two-factor authentication for increased security.
Updates	• Sign up for HPE OneView **bulletins**. • Install updates for all components in your environment on a regular basis.
Managed Enviro nment	• Restrict access to the appliance console to authorized users so that only authorized personnel can initiate HPE service requests, which can grant privileged access to th e appliance. • If you use an Intrusion Detection System (IDS) solution in your environment, ensure that the solution has visibility into network traffic in the virtual switches.

HPE and third-party security solutions

Provides information about integrated platform security technologies and supported partner solutions.

Subtopics

Microsoft Secured-core server support
AMD memory encryption
Intel Software Guard Extensions
Intel Trusted Execution Technology
Intel processor AES-NI support
Pensando Distributed Services Platform

Microsoft Secured-core server support

Microsoft Secured-core servers use a combination of hardware features, firmware enablement, and Windows Server OS capabilities to protect against malware and rootkit security exploits.

In general, Secured-core server provides:

- Comprehensive security—A suite of protection in a single enablement designed to work from boot to OS protection.
  - Hardware root-of-trust using Trusted Platform Module 2.0 (TPM 2.0).
  - Firmware protection enabled by processor support for Dynamic Root of Trust of Measurement (DRTM) technology and DMA protection.
  - Virtualization-based security (VBS) and hypervisor-based code integrity (HVCI).
- Preventative defense designed to prevent future exploits and attacks.

The Secured-core server AQ (Additional Qualification) defines an additional set of requirements to support and enable the Secured-core features with Windows Server 2022. Systems that meet the requirements are listed in the **Windows Server Catalog**.

This feature requires configuration in both the UEFI System Utilities and in the Windows OS. For more information, see the Implementing Microsoft Windows Server 2022 using HPE ProLiant Servers, Storage, and Networking Options **technical paper**.

AMD memory encryption

HPE servers with AMD processors support different types of memory encryption:

- Secure Memory Encryption (SME)—Full system memory encryption that helps defend data against certain cold boot and physical attacks. It transparently encrypts all physical memory and requires no

software intervention or support. Memory pages are automatically decrypted and encrypted upon any reads or writes.

- Transparent SME (TSME)—A stricter subset of SME, TSME transparently encrypts all physical memory and requires no software intervention. Memory pages are automatically decrypted and encrypted upon any reads or writes. The ephemeral encryption key is created during each boot and it is not accessible by software.
- Secure Encrypted Virtualization (SEV)—A set of AMD technologies that help protect virtual machines with one of up to 509 unique encryption keys known only to the processor.

Intel Software Guard Extensions

The Intel Software Guard Extensions (SGX) protect platforms against privileged malware. This solution allows applications to partition data and code into protected memory regions called enclaves. The enclave cannot be read or written to by code running outside of the enclave environment. This feature allows an application to protect sensitive code and data from a compromised operating system, virtual machine manager, or another virtual machine. SGX is used with Intel SGX drivers installed in the OS.

You can configure this feature with the UEFI System Utilities on Gen10 Plus servers with Intel processors that support it.

Intel Trusted Execution Technology

Intel Trusted Execution Technology (TXT) uses a TPM and cryptographic techniques to measure software and platform components to prevent malfunctioning or compromised components from running. It protects against software-based attacks that would modify the system configuration. You can configure this feature with the UEFI System Utilities on supported servers with Intel processors.

For support information, check the product QuickSpecs document: **https://www.hpe.com/info/qs**.

Intel processor AES-NI support

Intel AES-NI is an encryption instruction set that improves on the Advanced Encryption Standard (AES) algorithm. It accelerates data encryption and decryption on supported processors. AES-NI provides faster data protection and greater security, and it makes pervasive encryption possible in new areas.

For support information, check the product QuickSpecs document: **https://www.hpe.com/info/qs**.

Pensando Distributed Services Platform

The Pensando Distributed Services Platform (DSP) for supported Hewlett Packard Enterprise servers provides a powerful suite of software-defined services—like firewall, micro-segmentation, and telemetry—directly to the server. It boosts network and security performance by moving those services to the server edge, where the transition between network and server occurs. This solution replaces multiple appliances and reduces cost and complexity while improving security.

For more information, see **https://www.hpe.com/solutions/Pensando**.

Recommended security settings

Provides recommended configuration settings that help strengthen platform security and reduce risk.

This section provides recommended security practices related to passwords, iLO, and the UEFI System Utilities. For information about using the security features, see the product documentation.

Subtopics

Password guidelines
Recommended security settings for iLO
UEFI System Utilities security setting recommendations

Password guidelines

Hewlett Packard Enterprise recommends that you follow these password guidelines when you create and update user accounts.

- When working with passwords:
  - Do not write down or record passwords.
  - Do not share passwords with others.
  - Do not use passwords that are made up of words found in a dictionary.
  - Do not use passwords that contain obvious words. Examples include the company name, product name, user name, or login name.
  - Change passwords regularly.
  - Keep the iLO default credentials in a safe place.
- Use strong passwords with at least three of the following characteristics:

- At least one uppercase ASCII character
- At least one lowercase ASCII character
- At least one ASCII digit
- At least one other type of character (for example, a symbol, special character, or punctuation).

- The minimum length for a user account password can be configured in iLO. Depending on the configured **Minimum Password Length**, the password can have a minimum of zero characters (no password) and a maximum of 39 characters. Hewlett Packard Enterprise recommends configuring a **Minimum Password Length** of eight or more characters, which is the default value.

> **IMPORTANT**
>
> Do not set the **Minimum Password Length** to fewer than eight characters unless you have a physically secure management network that does not extend outside the secure data center.

Recommended security settings for iLO

See the following table for the paths and recommended settings for security related functions in iLO When determining the level of security to implement, organizations must find a balance between the security settings for iLO versus the adoption of restrictive security settings that hinder system usage. Weigh the need to protect the data in your environment against the need for authorized users to readily access that data. Enabling every possible suggested security setting may not be the best approach for your organization.

Table 1. Recommended security settings

Feature or function	Setting	Recommended value
TPM or TM status	Trusted Platform Module	Read only
	Module Type	Read only (displayed only when a TPM or TM is present)
Local user account controls	Add, edit, and delete local users	Up to 12 local accounts, with a range of individual user privilege settings to support the security principle of least access.

Feature or function	Setting	Recommended value
Directory group account controls	Add, edit, and delete directory groups	Up to 6 directory groups, to be used with Kerberos authentication or schema-free directory integration.
iLO server settings	Server Name	Leave this value blank and let the host OS assign it.
	Server FQDN/IP Address	Leave this value blank and let the host OS assign it.
iLO account service settings	Authentication Failures Before Delay	1 failure causes no delay
	Authentication Failure Delay Time	10 seconds
	Authentication Failure Logging	Enabled-Every Failure
	Minimum Password Length	8
	Password Complexity	Enabled
iLO network settings	Anonymous Data	Enabled
	IPMI/DCMI over LAN	Disabled (includes port setting)
	Remote Console	Enabled (includes port setting)
	Secure Shell (SSH)	Enabled (includes port setting)
	SNMP	Disabled
	Virtual Media	Enabled (includes port setting)
	Virtual Serial Port Log	Enabled
	Web Server [1]	Enabled (must set non-SSL and SSL ports) [2]
iLO settings	Idle Connection Timeout (minutes)	30 minutes
	iLO Functionality	Enabled
	iLO RIBCL Interface [1]	Enabled (Hewlett Packard Enterprise recommends using the iLO RESTful API.)
	iLO ROM-Based Setup Utility	Enabled

Feature or function	Setting	Recommended value
	iLO Web Interface	Enabled
	Remote Console Thumbnail	Disabled
	Require Host Authentication [1]	Enabled
	Require Login for iLO RBSU	Enabled
	Serial command line interface stat us	Enabled-Authentication Required (must set interface speed)
	Show iLO IP during POST	Enabled
	Show Server Health on External M onitor	Enabled
	VGA Port Detect Override	Enabled
	Virtual NIC	Enabled
iLO Service Port	iLO Service Port	Enabled
	USB flash drives	Disabled
	Require authentication	Enabled
	USB Ethernet adapters	Disabled
Secure shell key settings	Keys must be 2048-bit DSA or RSA (or ECDSA 384-bit keys in CN SA security state) [1] Keys must be 2048-bit RSA (or EC DSA 384-bit keys in CNSA securit y state) [3]	Using SSH keys provides better se curity than simple password autho rization.
Certificate mappings [1]	Each local user account must have an associated certificate.	Using a smart card with certificate s provides better security than sim ple password authentication.
Smartcards	CAC Smartcard Authentication	Enabled (requires an iLO Advance d license)
	CAC Strict Mode	(Optional) Enabled
	Directory User Certificate Name M apping	When using directory integration, select the correct option according to your user certificate.

Feature or function	Setting	Recommended value
	Import Trusted CA Certificates and revocation list	At least one trusted CA certificate must be installed, along with a revocation list.
	OCSP Settings	Enter the URL of an accepted OCSP provider to check user certificates for authentication.
SSL certificate administration	Customize Certificate	Install a trusted SSL certificate for each iLO. Default self-signed certificates are not secure.
Directory-based authentication	LDAP Directory Authentication	Select HPE Extended Schema (requires Active Directory) or use the Directory Default Schema. This feature requires some configuration steps outside of iLO.
	Local User Accounts	Depending on environment, enabled or disabled.
	Kerberos Authentication	Enabled (Also must set Realm, Server Address, Server Port, and Keytab file). This feature requires some configuration steps outside of iLO.
Encryption	Security State	High Security (minimum) [1] Secure Standard Mode [3]
HPE SSO	SSO Trust Mode	Trust by Certificate (Can select SSO privileges per user role)
Login security banner	Enable Login Security Banner	Enabled (must set a security message)
Firmware verification	Scan Settings	Enable Background Scan (must set the Integrity Failure Action)

1 iLO 5 and iLO 6
2 If disabled, access is removed for RIBCL, iLO RESTful API, remote console, iLO Federation, and the iLO web interface.
3 iLO 7

UEFI System Utilities security setting recommendations

Hewlett Packard Enterprise recommends the following UEFI System Utilities settings. For details about these settings, see the UEFI System Utilities online help or user guide for your platform (**https://www.hpe.com/support/hpeuefisystemutilities-quicklinks**. If a setting is not listed with a recommendation, determine the appropriate value based on your environment and security priorities.

Set Power On Password

Set a password that is compliant with strong security standards.

Set Admin Password

Set a password that is compliant with strong security standards.

Secure Boot settings

Attempt Secure Boot—Enabled

Secure Boot requires UEFI boot mode.

TLS (HTTPS) Advanced Security Settings

- **Cipher suites allowed for TLS connections**—Select the allowed ciphers for TLS connections
- **Certificate validation for every TLS connection**—Peer
- **Strict Hostname checking**—Enable
- **TLS Protocol Version Support**—Auto

Processor AES-NI Support

Enabled

Trusted Platform Module Options

- **TPM 2.0 Operation**—No Action
- **TPM Mode Switch Operation**—TPM 2.0
- **TPM 2.0 Visibility**—Visible
- **TPM UEFI Option ROM Measurement**—Enabled

SATA Controller Options

- **Embedded SATA Configuration**—To support SATA secure erase, this option must be set to SATA AHCI Support and the installed SATA drives must support the secure erase command.
- **SATA Secure Erase—**Enable this option to allow SATA secure erase functions to work. This control does not start the secure erase function.

Intel Security Options

- **Intel TXT Support**—Enabled, if available.

Advanced Security Options

- **One-Time Boot Menu (F11 Prompt)**—Disabled
- **Intelligent Provisioning (F10 Prompt)**—Enabled
- **Backup ROM Image Authentication**—Enabled

iLO 5 Configuration Utility

- **iLO 5 Functionality**—Enabled
- **iLO 5 Configuration Utility**—Enabled
- **Require user login and configuration privilege for iLO 5 Configuration**—Enabled
- **Show iLO 5 IP Address during POST**—Enabled
- **Local Users**—Enabled
- **Serial CLI Status**—Enabled
- **Serial CLI Speed (bits/second)**—As appropriate for your environment
- **iLO Web Interface**—Enabled

iLO 6 Configuration Utility

- **iLO 6 Functionality**—Enabled
- **iLO 6 Configuration Utility**—Enabled
- **Require user login and configuration privilege for iLO 6 Configuration**—Enabled
- **Show iLO 6 IP Address during POST**—Enabled
- **Local Users**—Enabled
- **Serial CLI Status**—Enabled
- **Serial CLI Speed (bits/second)**—As appropriate for your environment
- **iLO Web Interface**—Enabled

iLO 7 Configuration Utility

- **iLO 7 Functionality**—Enabled
- **iLO 7 Configuration Utility**—Enabled

- **Require Login for iLO 7 Configuration**—Enabled
- **Show iLO 7 IP Address during POST**—Enabled
- **Local Users**—Enabled
- **Serial CLI Status**—Enabled
- **Serial CLI Speed (bits/second)**—As appropriate for your environment
- **iLO Web Interface**—Enabled

Security resources

Provides security references, technical publications, alerts, and supporting security documentation.

Critical product security vulnerability alerts

https://www.hpe.com/info/security-alerts

This website provides detailed information about the latest critical security vulnerability alerts.

HPE Digital Trust Center

https://www.hpe.com/us/en/about/digital-trust-center/security.html

Security bulletins

To view the HPE Security Bulletin Library, click **Security Bulletin Library** on the following website: **https://www.hpe.com/support/hpesc**.

To report a security vulnerability, click the **Report a security vulnerability** link on the HPE Security Bulletin Library webpage.

Product alerts

To sign up for email updates, click **Product alerts** and then click **Sign up for Product Alerts** on the following webpage: **https://www.hpe.com/support/hpesc**.

Security overview

- **HPE Compute Security website**
- **360-Degree security where and when you need it**

Supply chain

- **HPE trusted supply chain expands to worldwide customers**
- **SiliconANGLE theCUBE video**

Ponemon Institute

The 2025 Global Study on Closing the IT Security Gap

Moor Insights & Strategy technical papers

- **RESEARCH NOTE: Is Quantum-Resistant Cybersecurity A Reality?**
- **RESEARCH NOTE: Server Platform Security in The AI — and Quantum — Era**
- **Zero Trust - Five Steps For Enterprise IT**
- **Putting zero trust to work in the post-quantum era**
- **Securing data in the agentic AI era**

Infusion Points blog

Built to Defend: Our Deep Dive into HPE ProLiant Compute Gen12 and HPE Compute Ops Management

Corsec

STIG Hardening Guide

HPE and Thales CipherTrust Data Security Platform

HPE servers and storage with Thales CipherTrust Data Security Platform

HPE Compute Ops Management

- **Cloud Security Alliance STAR Registry Listing**
- **HPE Compute Ops Management Security Guide**
- **HPE Compute Ops Management secure gateway technical paper**
- **HPE Compute Ops Management plug-in for VMware vCenter technical paper**

Pensando Technology

Distributed Intelligence to the Edge with HPE and Pensando Technology

HPE Resource Library

https://www.hpe.com/us/en/resource-library.html

Support and other resources

Subtopics

Accessing Hewlett Packard Enterprise Support
HPE product registration
Accessing updates
Remote support
Warranty information
Regulatory information
Documentation feedback

Accessing Hewlett Packard Enterprise Support

- For live assistance, go to the Contact Hewlett Packard Enterprise Worldwide website:

  https://www.hpe.com/info/assistance

- To access documentation and support services, go to the Hewlett Packard Enterprise Support Center website:

  https://www.hpe.com/support/hpesc

Information to collect

- Technical support registration number (if applicable)
- Product name, model or version, and serial number
- Operating system name and version
- Firmware version
- Error messages
- Product-specific reports and logs
- Add-on products or components
- Third-party products or components

HPE product registration

To gain the full benefits of the Hewlett Packard Enterprise Support Center and your purchased support services, add your contracts and products to your account on the HPESC.

- When you add your contracts and products, you receive enhanced personalization, workspace alerts, insights through the dashboards, and easier management of your environment.
- You will also receive recommendations and tailored product knowledge to self-solve any issues, as well as streamlined case creation for faster time to resolution when you must create a case.

To learn how to add your contracts and products, see **https://www.hpe.com/info/add-products-contracts**.

Accessing updates

- Some software products provide a mechanism for accessing software updates through the product interface. Review your product documentation to identify the recommended software update method.
- To download product updates:

  Hewlett Packard Enterprise Support Center

  https://www.hpe.com/support/hpesc

  My HPE Software Center

  https://www.hpe.com/software/hpesoftwarecenter
- To subscribe to eNewsletters and alerts:

  https://www.hpe.com/support/e-updates
- To view and update your entitlements, and to link your contracts and warranties with your profile, go to the Hewlett Packard Enterprise Support Center **More Information on Access to Support Materials** page:

  https://www.hpe.com/support/AccessToSupportMaterials

> **IMPORTANT**
> Access to some updates might require product entitlement when accessed through the Hewlett Packard Enterprise Support Center. You must have an HPE Account set up with relevant entitlements.

Remote support

Remote support is available with supported devices as part of your warranty or contractual support agreement. It provides intelligent event diagnosis, and automatic, secure submission of hardware event

notifications to Hewlett Packard Enterprise, which initiates a fast and accurate resolution based on the service level of your product. Hewlett Packard Enterprise strongly recommends that you register your device for remote support.

If your product includes additional remote support details, use search to locate that information.

HPE Get Connected

https://www.hpe.com/services/getconnected

HPE Tech Care Service

https://www.hpe.com/services/techcare

HPE Complete Care Service

https://www.hpe.com/services/completecare

Warranty information

To view the warranty information for your product, see the **warranty check tool**.

Regulatory information

To view the regulatory information for your product, view the Safety and Compliance Information for Server, Storage, Power, Networking, and Rack Products, available at the Hewlett Packard Enterprise Support Center:

https://www.hpe.com/support/Safety-Compliance-EnterpriseProducts

Additional regulatory information

Hewlett Packard Enterprise is committed to providing our customers with information about the chemical substances in our products as needed to comply with legal requirements such as REACH (Regulation EC No 1907/2006 of the European Parliament and the Council). A chemical information report for this product can be found at:

https://www.hpe.com/info/reach

For Hewlett Packard Enterprise product environmental and safety information and compliance data, including RoHS and REACH, see:

https://www.hpe.com/info/ecodata

For Hewlett Packard Enterprise environmental information, including company programs, product recycling, and energy efficiency, see:

https://www.hpe.com/info/environment

Documentation feedback

Hewlett Packard Enterprise is committed to providing documentation that meets your needs. To help us improve the documentation, click the **Feedback** button on the page of an opened document on the Hewlett Packard Enterprise Support Center portal (**https://www.hpe.com/support/hpesc**). Use this feature to send any errors, suggestions, or comments. This process captures all document information.