HPE Edgeline EL1000 System User Guide

Part Number: 10-191019-Q321
Published: May 2021
Edition: 1

HPE Edgeline EL1000 System User Guide

Abstract
This document is for the person who installs, administers, and troubleshoots servers and storage systems. Hewlett Packard Enterprise assumes you are qualified in the servicing of computer equipment and trained in recognizing hazards in products with hazardous energy levels.

Part Number: 10-191019-Q321
Published: May 2021
Edition: 1

© Copyright 2017, 2021 Hewlett Packard Enterprise Development LP

Notices

The information contained herein is subject to change without notice. The only warranties for Hewlett Packard Enterprise products and services are set forth in the express warranty statements accompanying such products and services. Nothing herein should be construed as constituting an additional warranty. Hewlett Packard Enterprise shall not be liable for technical or editorial errors or omissions contained herein.

Confidential computer software. Valid license from Hewlett Packard Enterprise required for possession, use, or copying. Consistent with FAR 12.211 and 12.212, Commercial Computer Software, Computer Software Documentation, and Technical Data for Commercial Items are licensed to the U.S. Government under vendor's standard commercial license.

Links to third-party websites take you outside the Hewlett Packard Enterprise website. Hewlett Packard Enterprise has no control over and is not responsible for information outside the Hewlett Packard Enterprise website.

Acknowledgments

Microsoft® and Windows® are either registered trademarks or trademarks of Microsoft Corporation in the United States and/or other countries.

Linux™ is the registered trademark of Linus Torvalds in the U.S. and other countries.

Table of contents

Component identification 7
PCIe configuration 7
Front panel components 7
Front panel LEDs and buttons 8
Right side components 9
System board components 10
PXI/PXIe configuration 11
Front panel components 11
Front panel LEDs and buttons 12
Right side components 13
Mini-PCIe module port-cable mapping 14
System board components 14
DIP switch 16
Hot-plug drive LED definitions 16
HPE H240 Smart Host Bus Adapter port identification 17
Operations 18
Install an AC power supply 19
Install the DC power supply 19
Power down the system 28
Power up the system 28
Mount the system 29
Dismount the system 29
Dismounting the system from a wall mount 30
Dismounting the system from a rack mount 30
Dismounting the system from an ETSI rack mount 31
Dismounting the system from an Enterprise rack mount 31
Remove the access panel 31
Install the fans 32
Install the blade 33
Remove the blade 34
Install the mini-PCIe adapter board 35
Install the antenna 36
Installing the WiFi or LTE antennas 37
Installing the WiFi and LTE combo antennas 37

Setup 38
Optional services 38
Optimum environment 38
Temperature requirements 39
Power requirements 39
Installing hardware options 39
Registering the product 39
Hardware options installation 40
Installing the wall mounting option kit 40
Installing the rack mounting option kit 41
Installing the ETSI rack mounting option kit 42
Installing the Enterprise rack mounting option kit 43
Installing the drive 47
Installing the card options 48
Install the PCIe card 48
Install the PXI/PXIe card 51
Installing the mini-PCIe module options 52
Install a half-length mini-PCIe WiFi module option 52
Installing a full-length mini-PCIe LTE module 55
Installing the NVMe M.2 SSD option 57
Configuration 62
Accessing the System Utilities menu 62
Finding the IP address for an iLO on system blades 64
Using dynamic DNS to access the iLO 65
Using the MAC address to identify the IP address of the iLO 65
Using NMAP to identify the IP address of the iLO 65
Configuring the DHCP server for Windows on your laptop 66
Setting the static IP address using the serial console cable 73
Using iLO 4 configuration utility 73
Using iLO 5 configuration utility 74
Viewing or updating the DHCP address using the serial console cable 76
Finding the IP address through DHCP 76
Software and configuration utilities 76
Product QuickSpecs 77
Supported operating systems and drivers matrix 77
HPE iLO 77
Active Health System 78
Active Health System data collection 79

Active Health System log ... 79
iLO 4 or iLO 5 RESTful API support ... 80
Integrated Management Log ... 80
Temperature information ... 81
Thermal configuration settings ... 81
Intelligent PDU details ... 81
Smart Storage Energy Pack list ... 82
Using iLO 5 for viewing chassis information ... 83
Chassis information ... 83
Chassis Time ... 84
Configuring the chassis time ... 84
HPE Edgeline Component Pack ... 84
Firmware information ... 84
HPE Edgeline Infrastructure Manager ... 85
UEFI System Utilities ... 85
Using UEFI System Utilities ... 86
Flexible boot control ... 86
Restoring and customizing configuration settings ... 87
Secure Boot configuration ... 87
Embedded UEFI shell ... 88
Embedded Diagnostics option ... 88
iLO RESTful API support for UEFI ... 89
Re-entering the server serial number and product ID ... 89
Troubleshooting ... 90
HPE Edgeline Troubleshooting Guide ... 90
Battery ... 90
Battery specifications ... 90
Replace the system battery ... 91
Warranty and regulatory information ... 92
Warranty information ... 92
Regulatory information ... 93
Japnese certification mark for WiFi module ... 94
Japanese certification mark for LTE module ... 94
Belarus Kazakhstan Russia marking ... 94
Turkey RoHS material content declaration ... 96
Ukraine RoHS material content declaration ... 96
Federal Communications Commission notice for Class A equipment ... 97
European Union (CE) compliance ... 97

Canada, Industry Canada (IC) Notices....99
Electrostatic discharge....102
Preventing electrostatic discharge....102
Grounding methods to prevent electrostatic discharge....102
Specifications....103
Product QuickSpecs....103
Environmental specifications....103
Environmental specifications-system components support matrix....105
Mechanical specifications....106
Power supply specifications....107
PXI/PXIe specifications....109
Electrical load regulation specifications....109
Chassis cooling specifications....109
Pollution specifications....109
Shock and vibration specifications....110
Acoustic emission specifications....110
HPE EMC compliance testing....112
System synchronization clock specifications....113
Support and other resources....115
Websites....115
Accessing Hewlett Packard Enterprise Support....116
Accessing updates....116
Customer self repair....117
Remote support....117
Acronyms and abbreviations....118
Documentation feedback....119

Component identification

This chapter describes the external and internal server features and components.

PCIe configuration

Front panel components

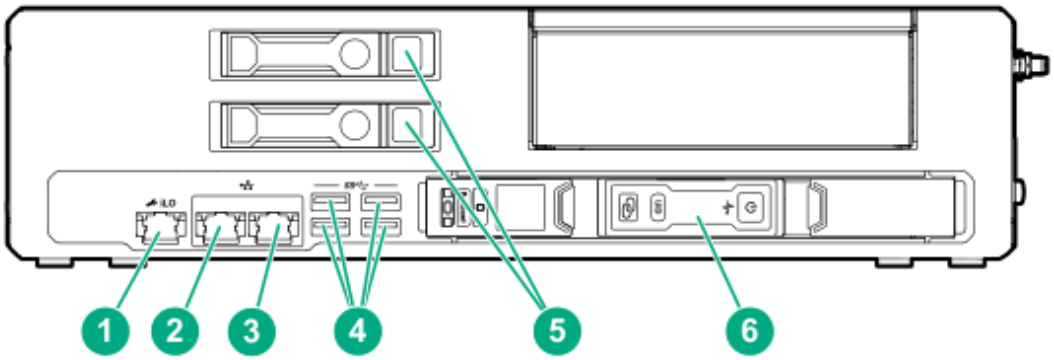

Item	Description
1	iLO port
2	Network port 1 [1]
3	Network port 2 [1]
4	USB 3.0 ports
5	Drives
6	Blade

1 Network connections are available in 1G and 10G. The 1G is shown.

Front panel LEDs and buttons

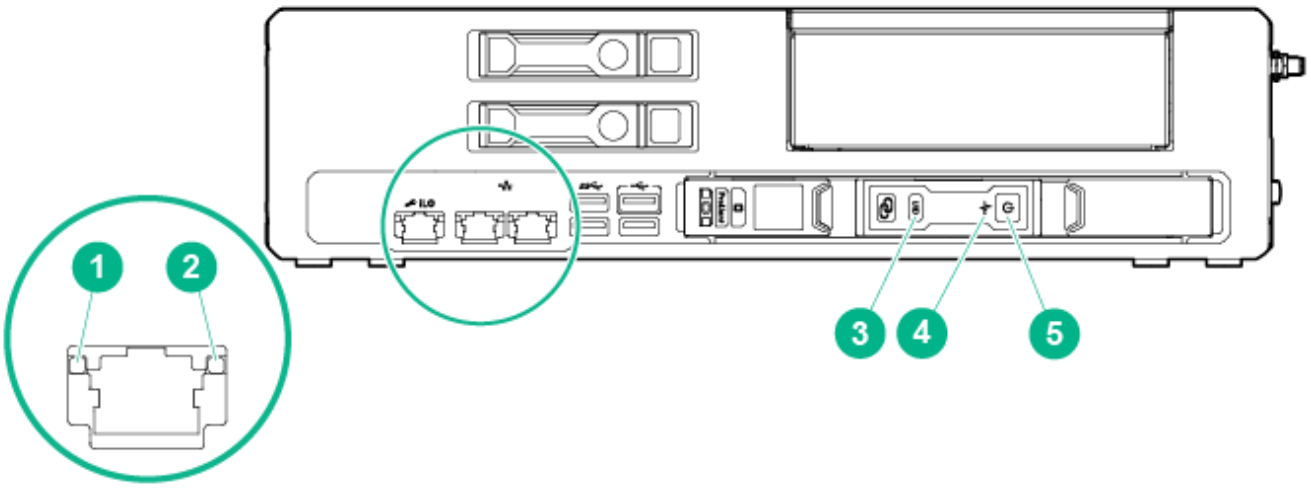

Item	Description	Status
1	iLO and network port link LED	• Green = Linked to network • Off = No network connection
2	iLO and network port activity LED	• Flashing green = Network activity • Off = No network activity
3	Blade UID LED/button	• Blue = Blade ID is selected • Flashing Blue = Blade firmware update is in progress or iLO IRC is in use • Off = Blade ID is not selected
4	Blade health LED	• Green = Normal operation • Flashing Amber = Degraded condition • Flashing Red = Critical condition • Off = No power

Item	Description	Status
5	Blade power LED	• Green = CPU power on • Flashing green = iLO booting • Amber = Standby operation • Off= No power

Right side components

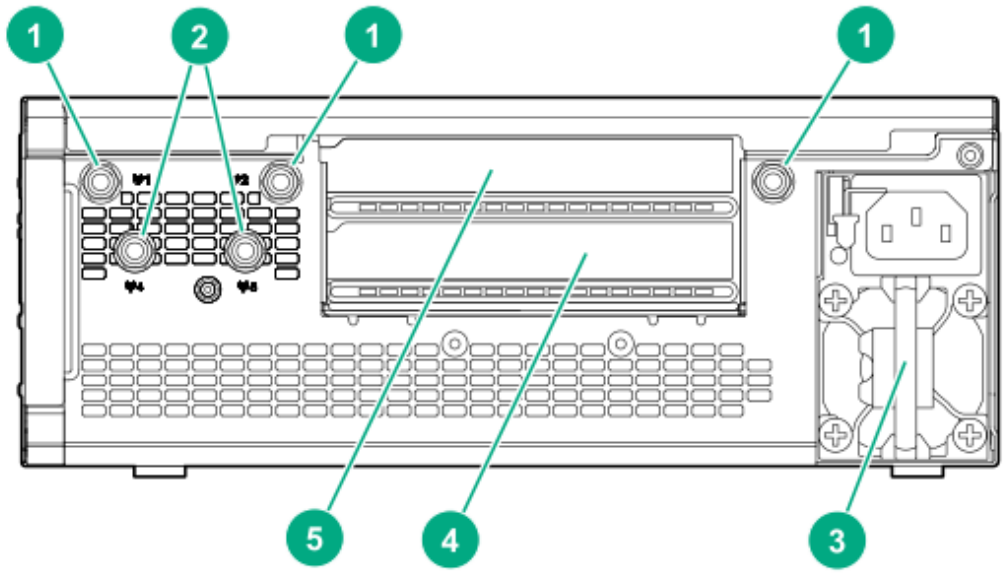

Item	Description
1	Antenna connectors (LTE/3G/4G)
2	Antenna connectors (WiFi)
3	Power supply
4	PCIe slot 2

Item	Description
5	PCIe slot 1

System board components

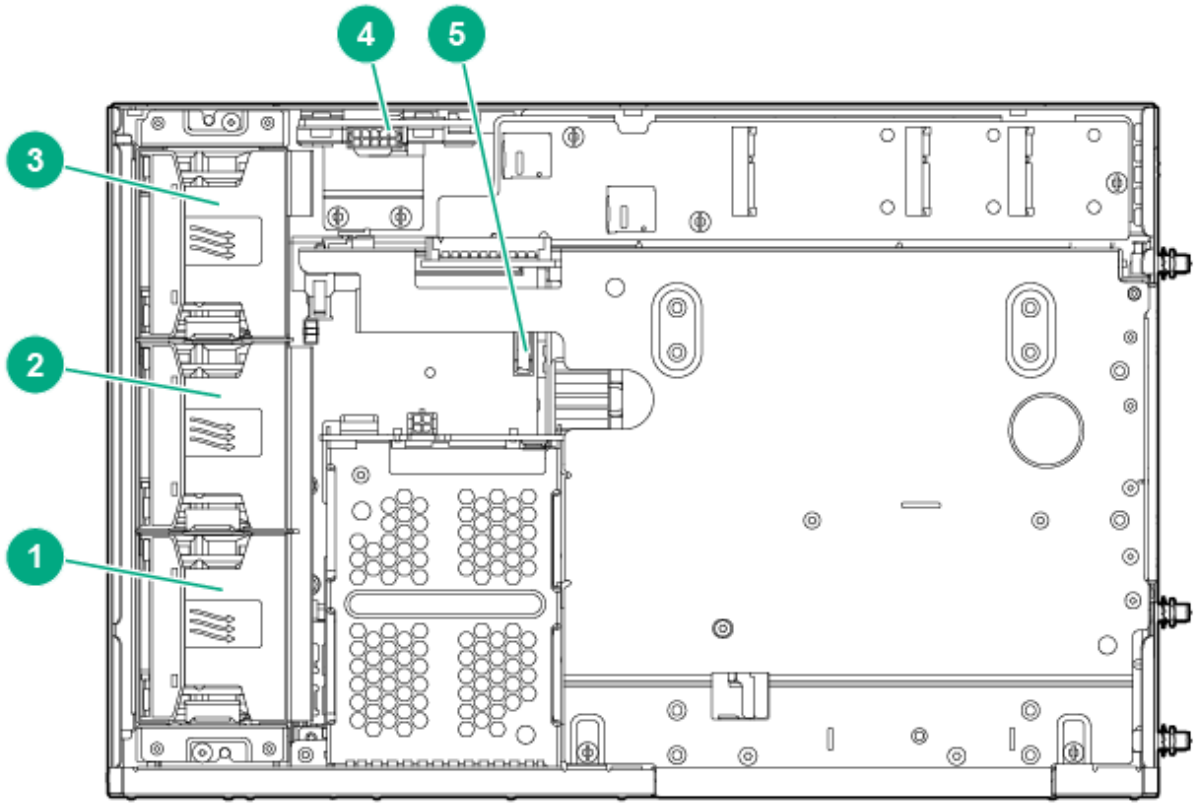

Item	Description
1	Fan 1
2	Fan 2
3	Fan 3

Item	Description
4	Power distribution board
5	System battery

PXI/PXIe configuration

Front panel components

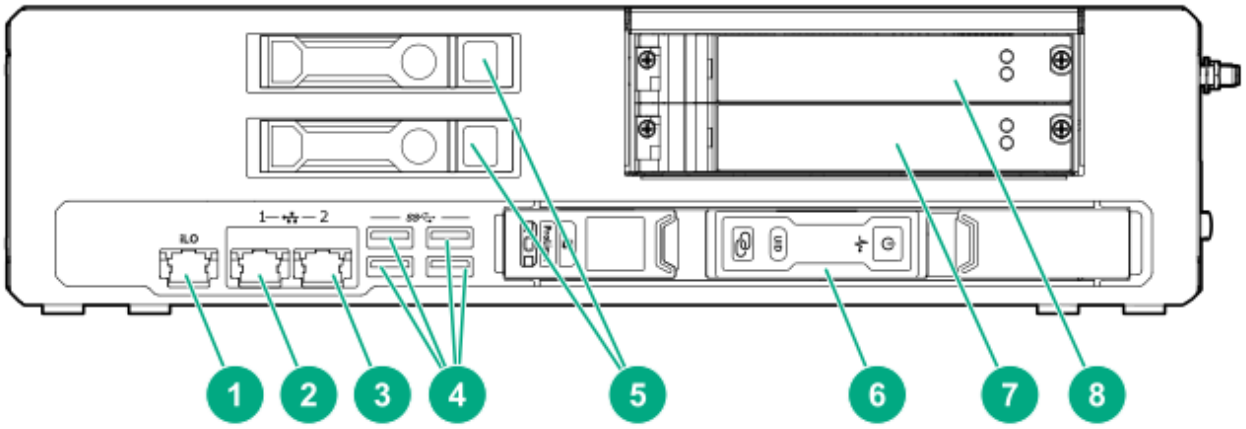

Item	Description
1	iLO port
2	Network port 1 [1]
3	Network port 2 [1]
4	USB 3.0 ports (4)
5	Drives (2)
6	Blade

Item	Description
7	PXI/PXIe slot 3
8	PXI/PXIe slot 2

[1] 1G network connection

Front panel LEDs and buttons

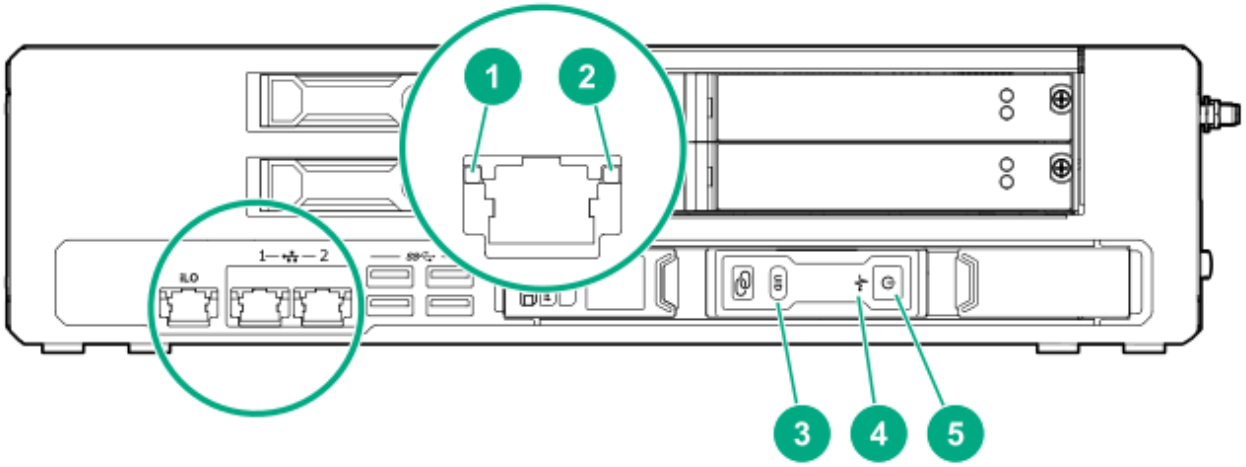

Item	Description	Status
1	iLO and network port link LED	• Green = Linked to network • Off = No network connection
2	iLO and network port activity LED	• Flashing green = Network activity • Off = No network activity
3	Blade UID LED/button	• Blue = Blade ID is selected • Flashing Blue = Blade firmware update is in progress or iLO IRC is in use

Item	Description	Status
		• Off = Blade ID is not selected
4	Blade health LED	• Green = Normal operation • Flashing Amber = Degraded condition • Flashing Red = Critical condition • Off = No power
5	Blade power LED	• Green = CPU power on • Flashing green = iLO booting • Amber = Standby operation • Off= No power

Right side components

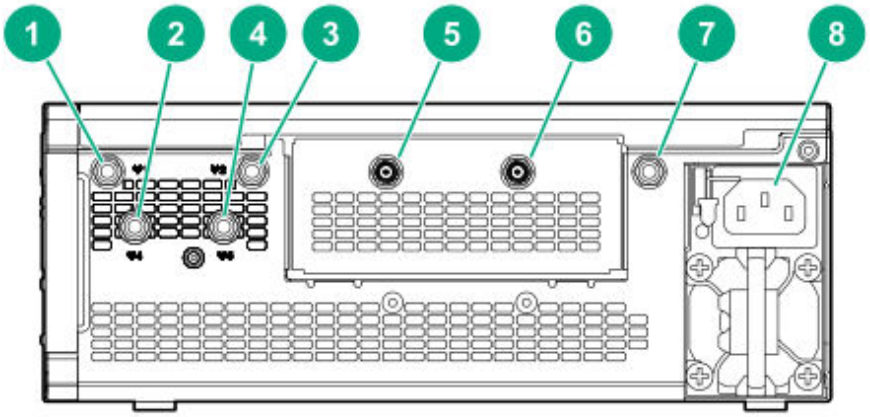

Item	Description
1	Antenna connector 1 (LTE/3G/4G)
2	Antenna connector 4 (WiFi)
3	Reserved

Item	Description
4	Antenna connector 5 (WiFi)
5	REF in connector
6	REF out connector
7	Antenna connector 3 (LTE/3G/4G)
8	Power supply

Mini-PCIe module port-cable mapping

Table 1: LTE module port-cable mapping

LTE module cable port	Cable color	Antenna connector
Port 1	Black	Antenna connector 1
Port 2	White (not used)	Reserved
Port 3	Grey	Antenna connector 3

Table 2: WiFi module port-cable mapping

WiFi module cable port	Cable color	Antenna connector
Port 4	Red	Antenna connector 4
Port 4	Blue	Antenna connector 5

System board components

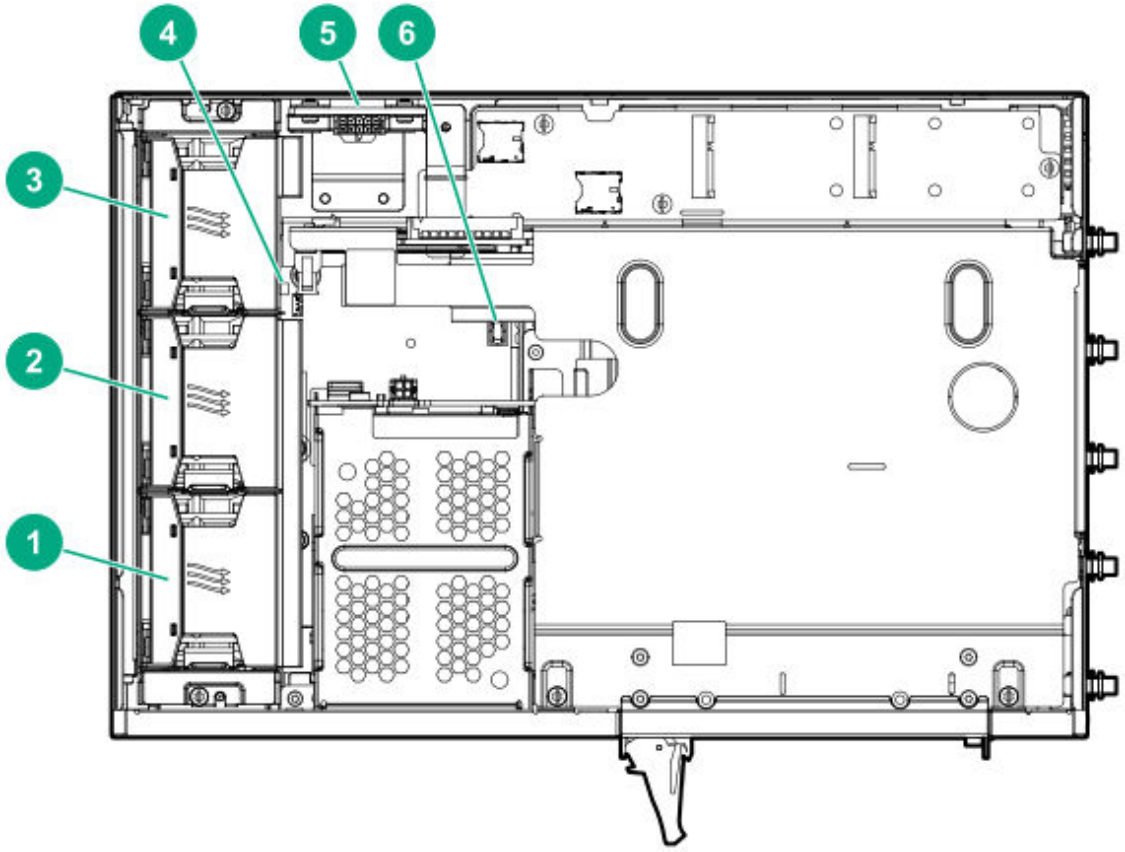

Item	Description
1	Fan 1
2	Fan 2
3	Fan 3
4	DIP Switch [1]
5	Power distribution board
6	System battery

[1] The fan cage might have to be removed to access the switch

DIP switch

Position	Default	Function
S1	Off	• Off = Fan normal mode • On = Fan high mode

Hot-plug drive LED definitions

When a drive is configured as part of a Smart Array and connected to a powered-up controller, the drive LEDs indicate the condition of the drive. If no Smart Array adapter is present, then these drives will not be hot pluggable, but will still show the activity LEDs.

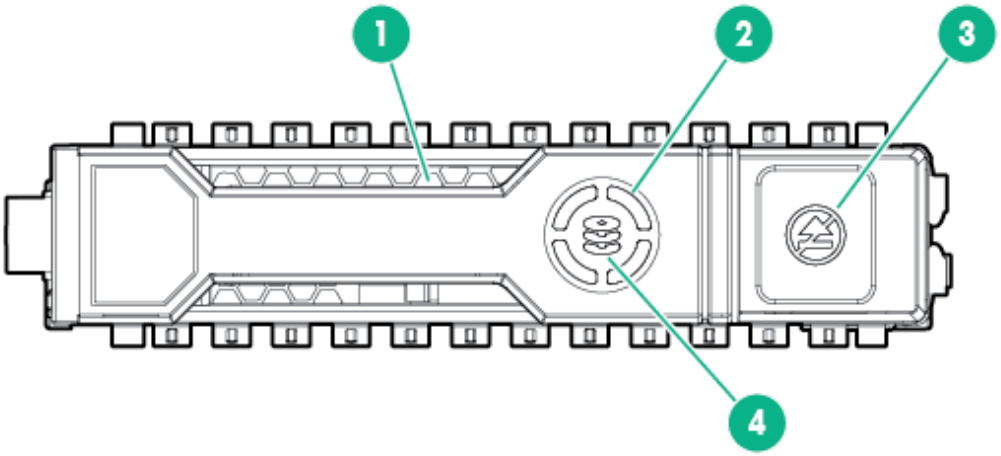

Item	LED	Status	Definition
1	Locate	Solid blue	The drive is being identified by a host application.

		Flashing blue	The drive carrier firmware is being updated or requires an update.
2	Activity ring	Rotating green	Drive activity
		Off	No drive activity
3	Do not remove	Solid white	Do not remove the drive. Removing the drive causes one or more of the logical drives to fail.
		Off	Removing the drive does not cause a logical drive to fail.
4	Drive status	Solid green	The drive is a member of one or more logical drives.
		Flashing green	The drive is rebuilding or performing a RAID migration, strip size migration, capacity expansion, or logical drive extension, or is erasing.
		Flashing amber/green	The drive is a member of one or more logical drives and predicts the drive will fail.
		Flashing amber	The drive is not configured and predicts the drive will fail.
		Solid amber	The drive has failed.
		Off	The drive is not configured by a RAID controller.

HPE H240 Smart Host Bus Adapter port identification

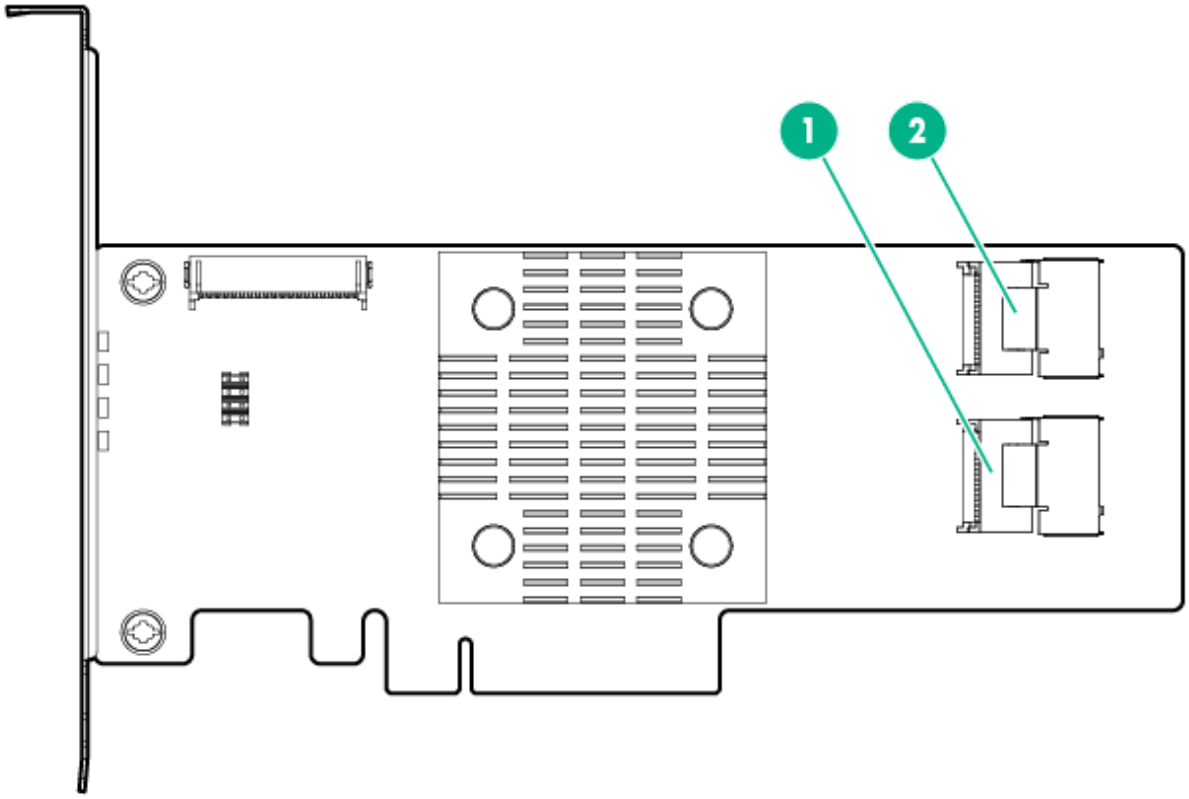

Item	Description
1	Port 1
2	Port 2

Box 1 is drive 1 and box 2 is drive 2 for both ports.

Operations

This chapter describes the hardware operations carried out prior to and after installing or removing a hardware option, or performing a server maintenance or troubleshooting procedure.

Before performing these hardware operations, review and observe the server warnings and cautions.

Install an AC power supply

Procedure

1. Align the power supply to the system.
2. Insert the power supply until it locks in place.

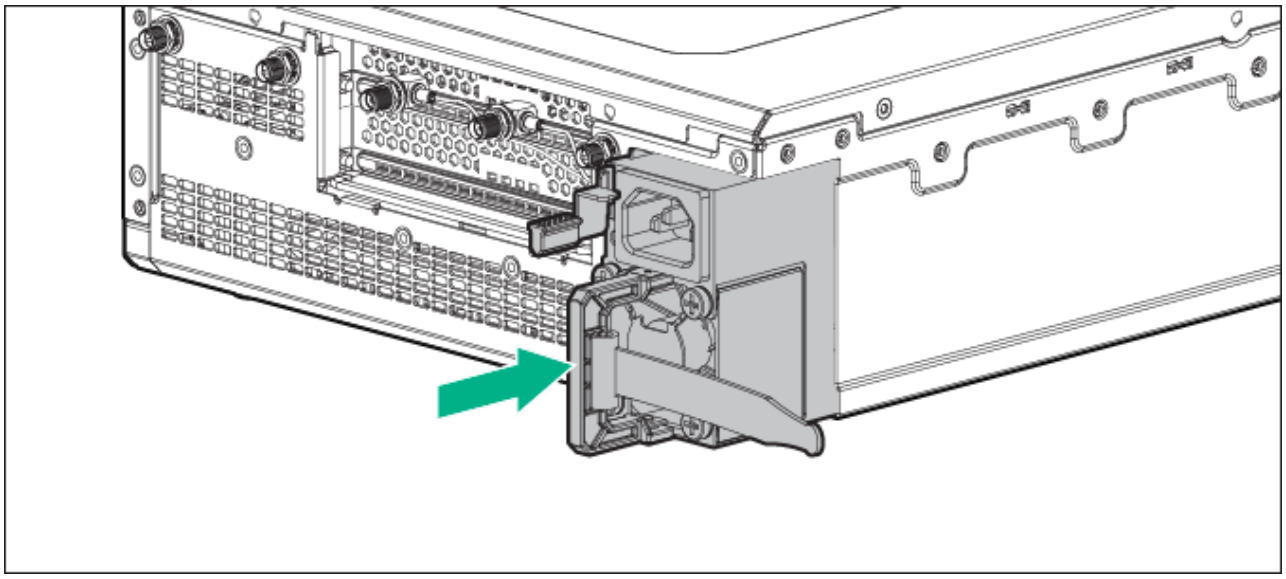

3. Connect the power cord and tie wrap the cable.

Install the DC power supply

Procedure

1. Remove the ring tongue from the top of the power supply.

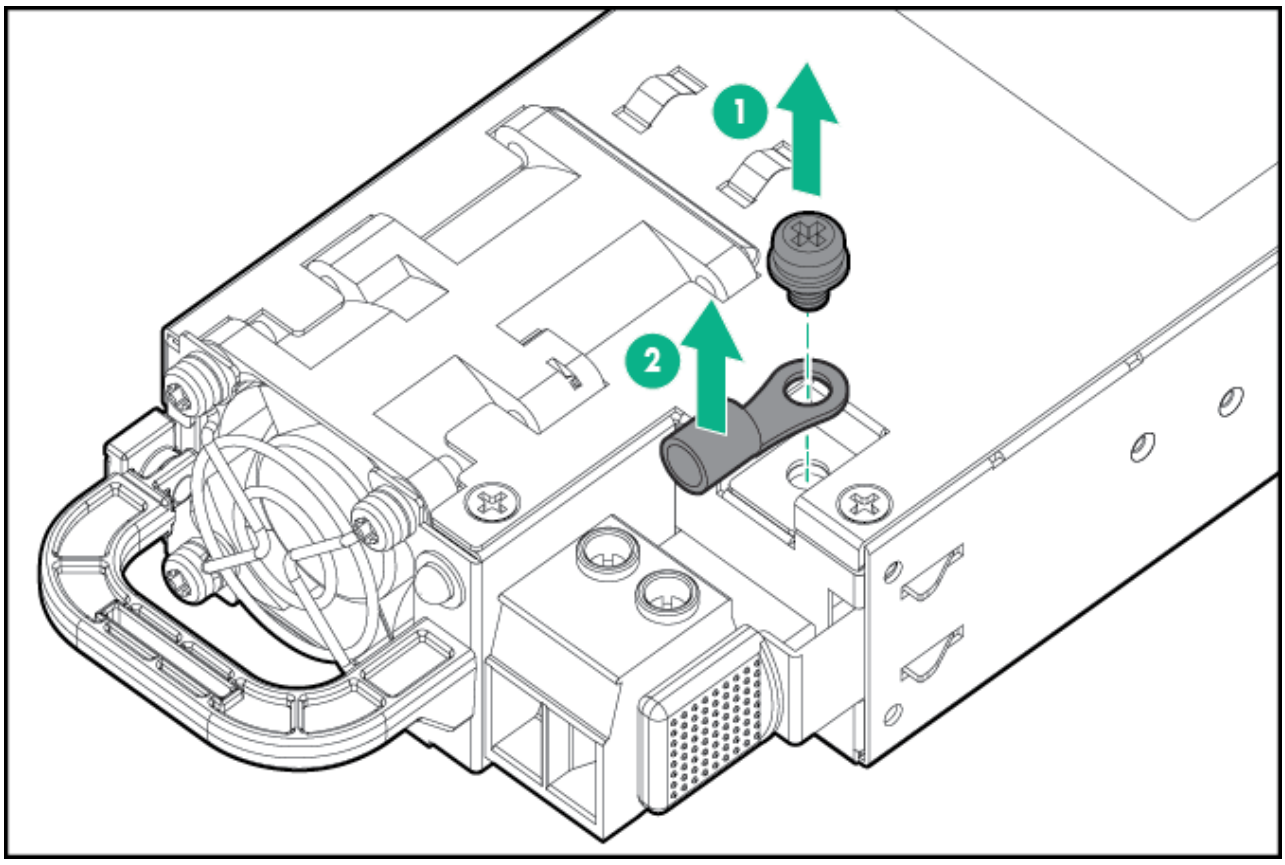

2. Crimp the ring tongue to the ground cable from the -48V power source.

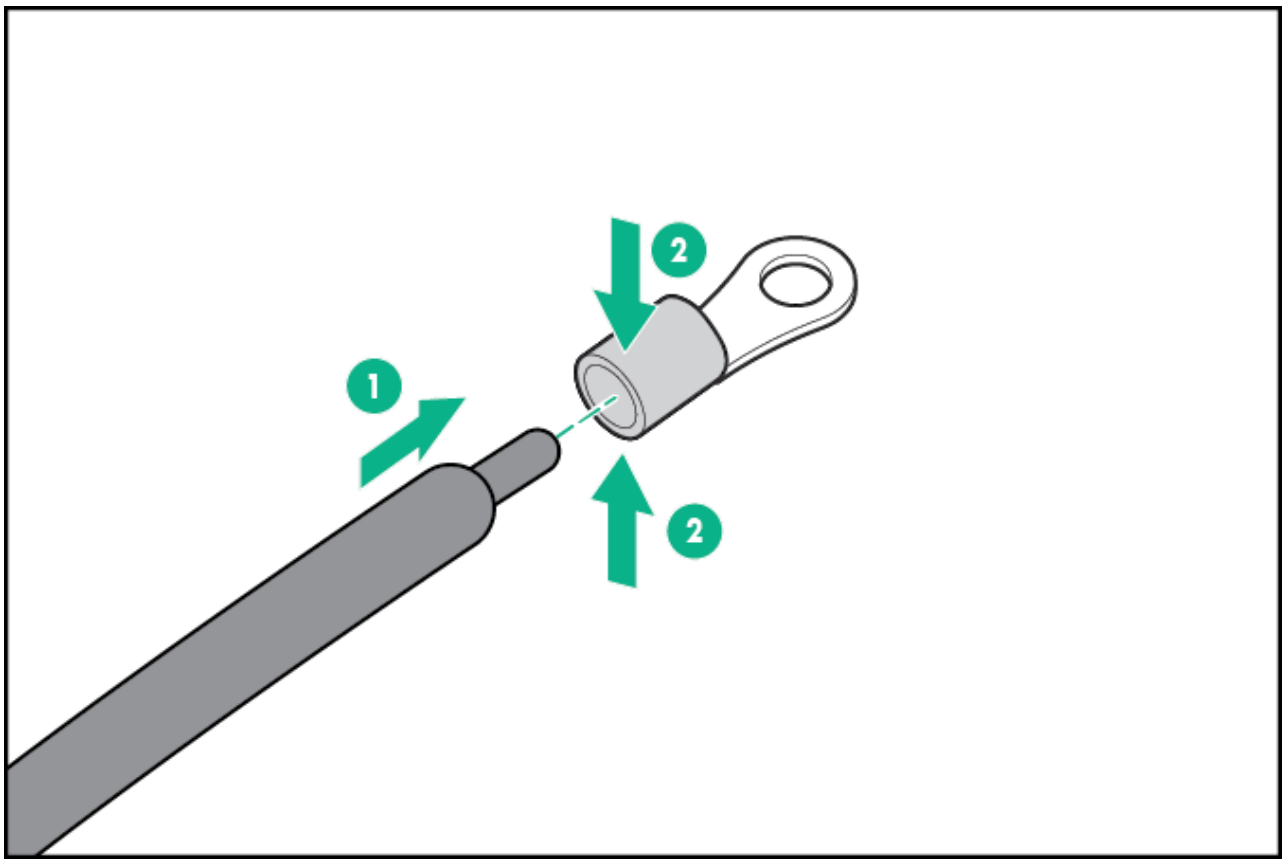

3. Remove the black connector from the rear of the power supply.

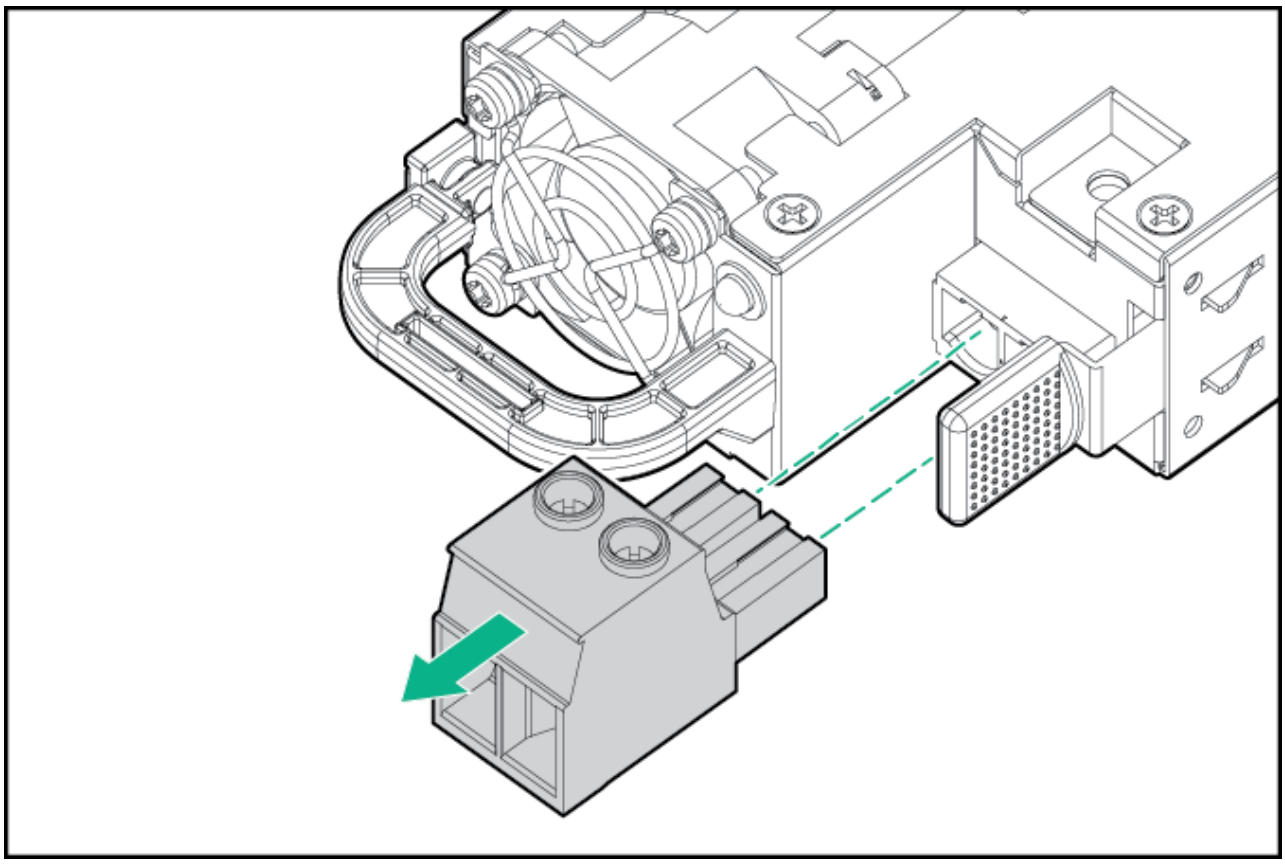

4. Loosen the screws on the connector.

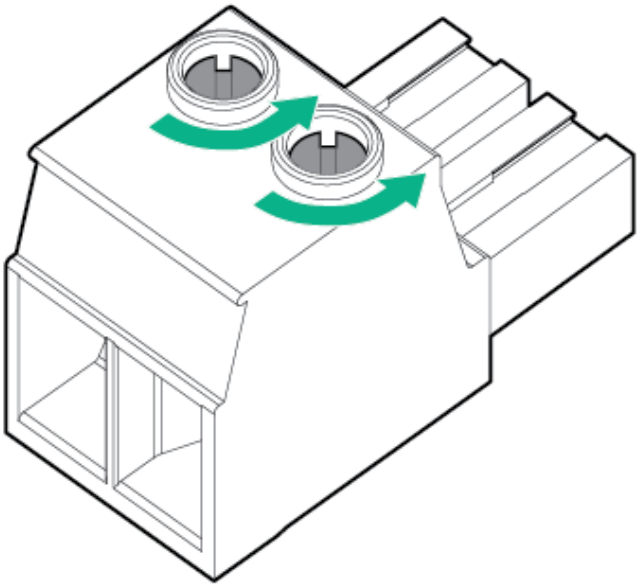

5. Attach the (earthed) cable to the ground screw and washer and tighten to 13 lb-in of torque. The ground cable must be connected before connecting the -48V wire and return wire.

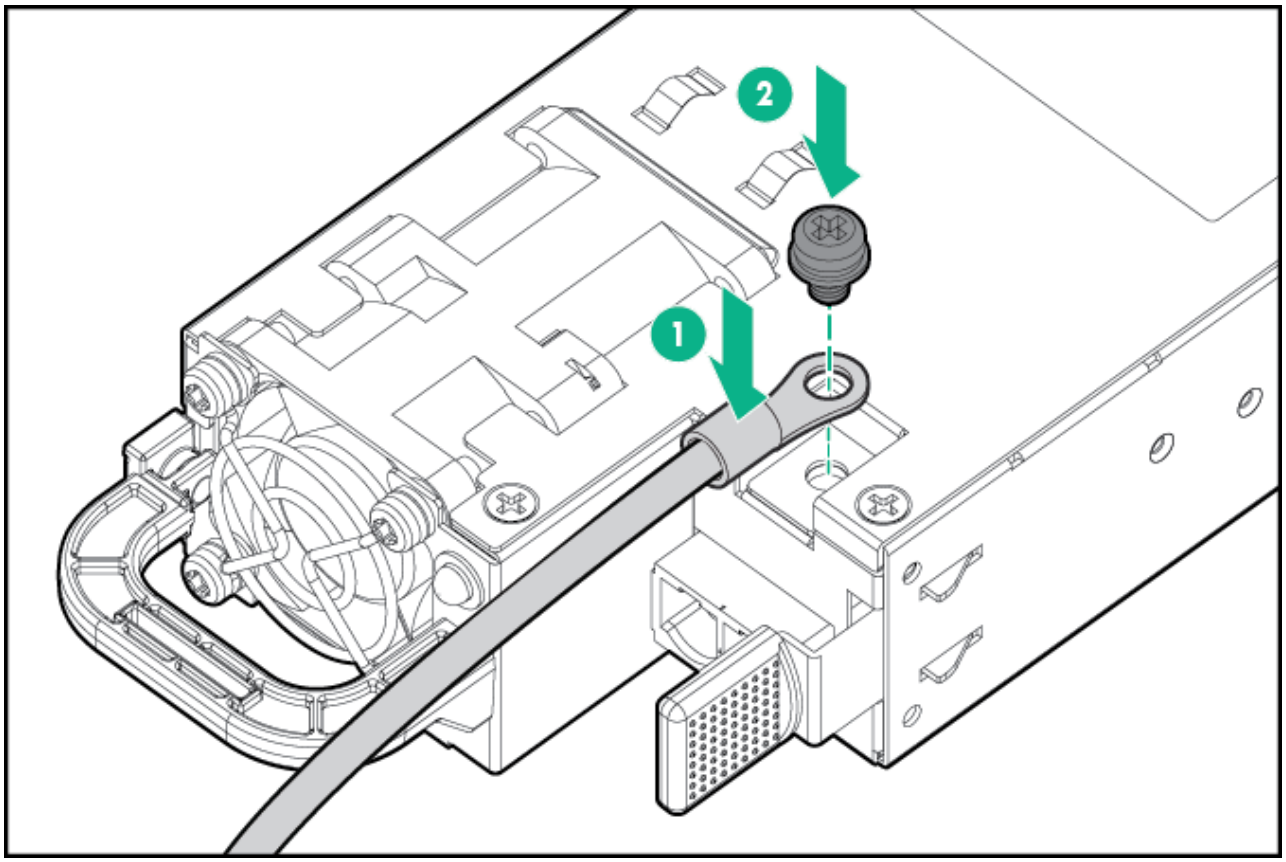

6. Insert the -48V wire into the left side of the connector and tighten the screw to 10 lb-in of torque.

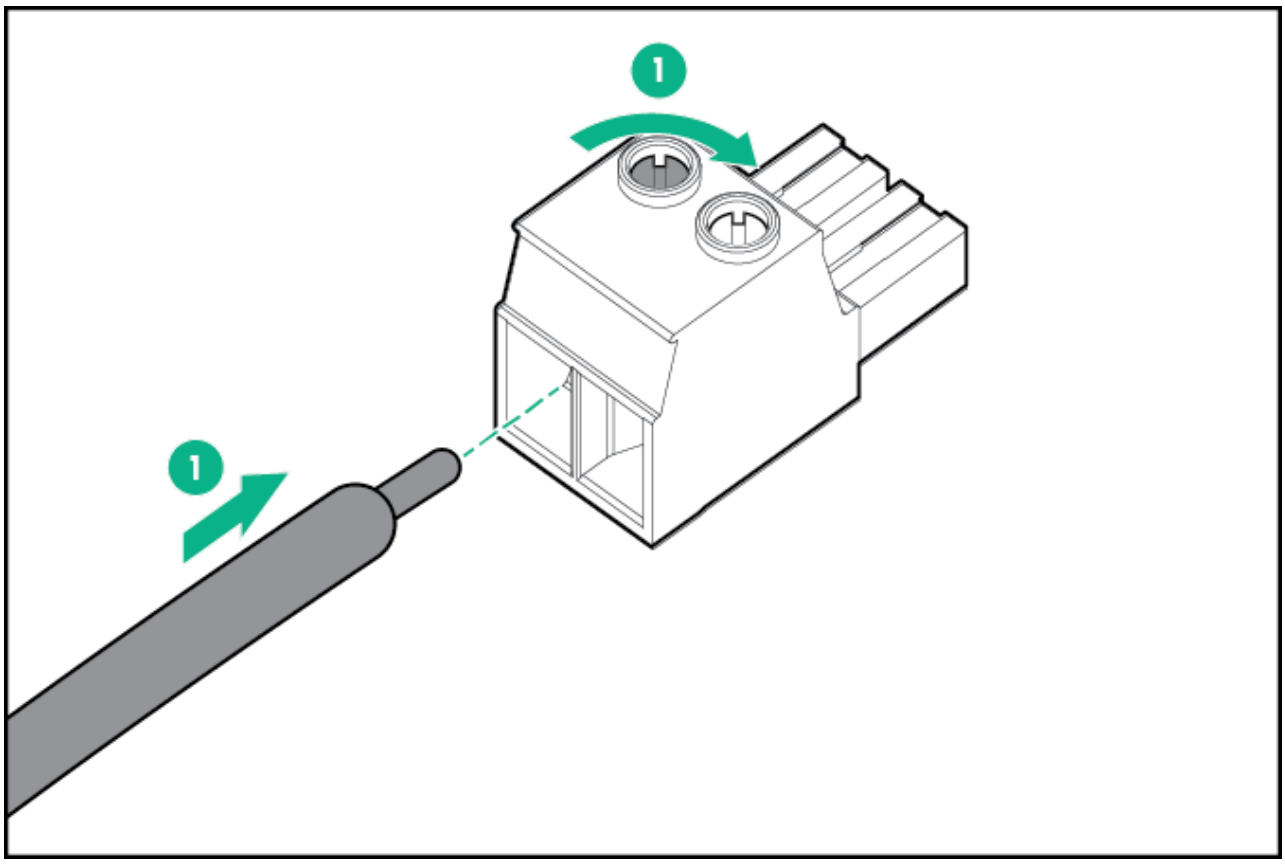

7. Insert the return wire into the right side of the connector and tighten the screw to 10 lb-in of torque.

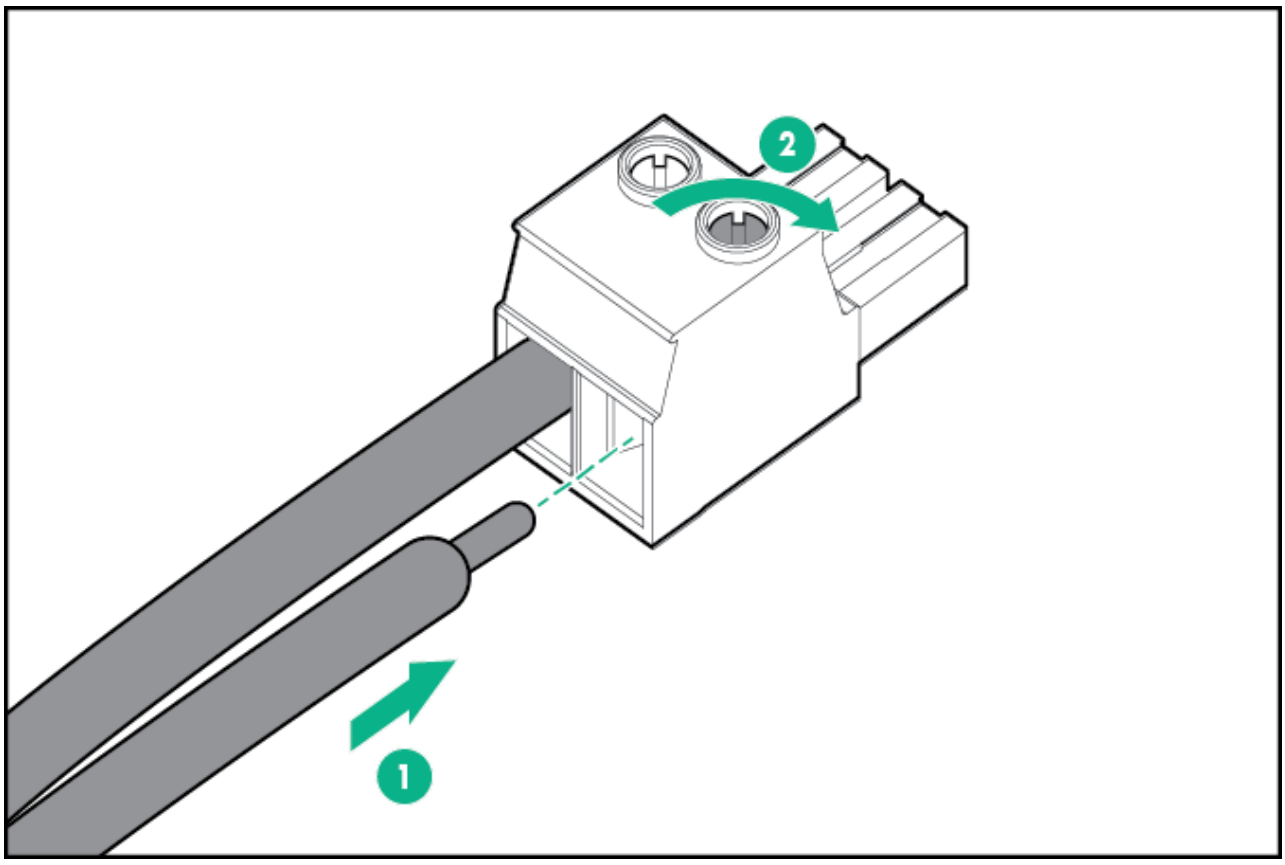

8. Insert the power supply into the power supply bay until it clicks into place.

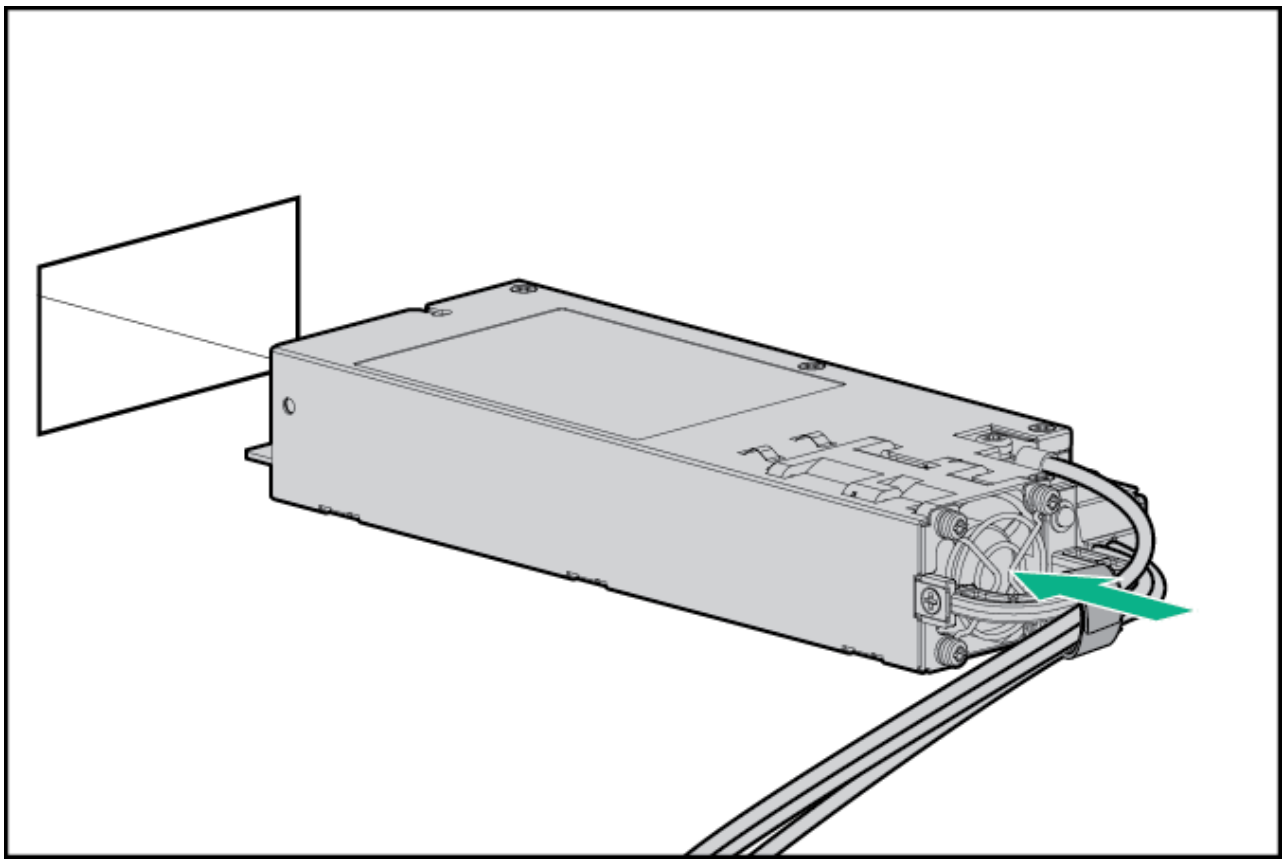

9. Insert the connector into the power supply.

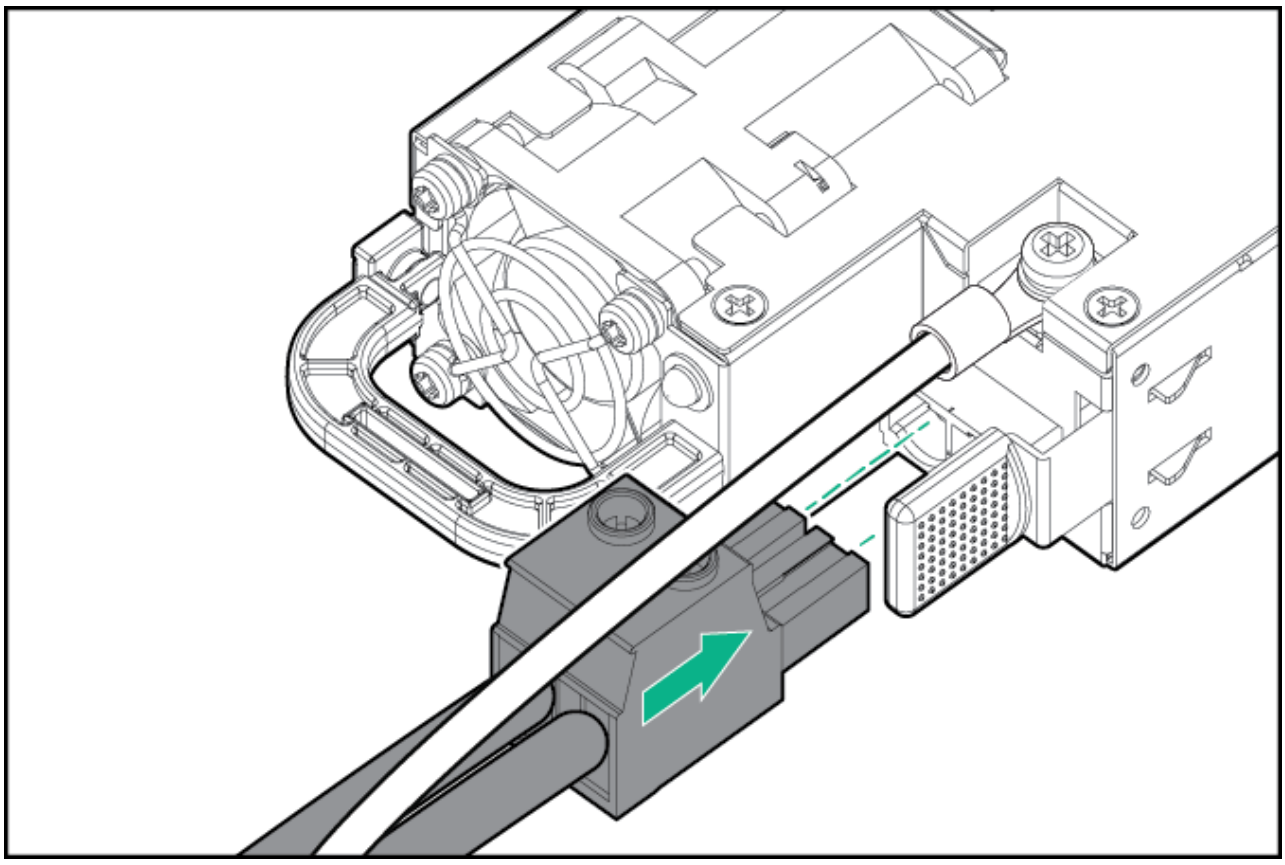

.0. Attach the cables to the power supply handle with the hook-and-loop strap.

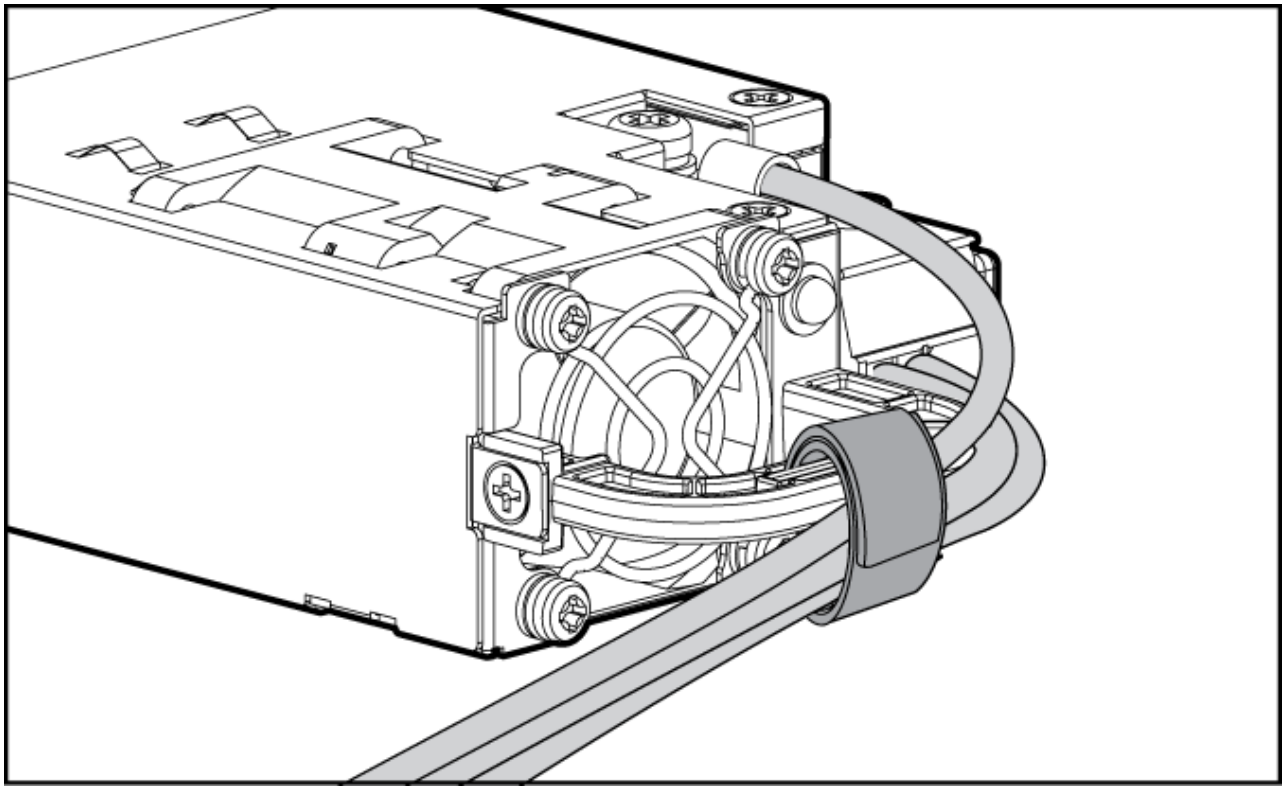

1. Route the power cord. Use best practices when routing power cords and other cables. A cable management arm is available to help with routing. To obtain a cable management arm, contact a Hewlett Packard Enterprise authorized reseller.
2. Make sure the -48V DC power source is off or the PDU breaker is in the off position, and then connect the power cord to the -48V DC power source or PDU.
3. Turn on the -48V power source or switch the PDU breaker to the on position to supply -48V to the power supply.
4. Be sure that the green power supply LED is on.

Power down the system

Before powering down the system for any upgrade or maintenance procedures, back up critical system data and programs.

Before performing chassis maintenance, shut down all blades installed in the system.

Procedure

Use one of the following methods to power down the system:

- Press and release the Power On/Standby button of the blades installed in the system.
  This method initiates a controlled shutdown of applications and the OS before the system enters standby mode.
- Press and hold the Power On/Standby button of the blades installed in the system for more than 4 seconds to force the system to power down.
  This method forces the system to power down without properly exiting applications and the OS. If an application stops responding, you can use this method to force a shutdown.

Verify the system is in standby mode and the system power LED is amber.

Power up the system

If the system is connected to a power source, it powers up automatically by default. Generally, it has to be powered up only after a manual shutdown. However, using iLO, blades can be individually configured to not power up automatically.

Procedure

Use one of the following methods to power up the system:

- Press the Power On/Standby button of the blade installed in the system.
- Remotely power up the system through iLO.

Mount the system

The following kits are available to mount your system:

- Wall mounting kit
- Rack mounting kit
- ETSI rack mounting kit
- Enterprise rack mounting kit

Dismount the system

Dismount the system, based on the mount installed:

- Dismounting the system from a wall mount
- Dismounting the system from a rack mount
- Dismounting the system from an ETSI rack mount
- Dismounting the system from an Enterprise rack mount

Dismounting the system from a wall mount

To dismount the system from a wall mount, slide the EL1000 system off the wall-mounting screws.

It is not necessary to remove the wall mounting plate from the EL1000 system. Hewlett Packard Enterprise recommends having a cart to place the system upon, which allows you to service the system without removing the wall mounting plate or cables.

If you have to service the system in another location, perform the following steps.

Procedure

1. Remove the four T-15 Torx screws securing the wall mounting plate to the bottom of the system.

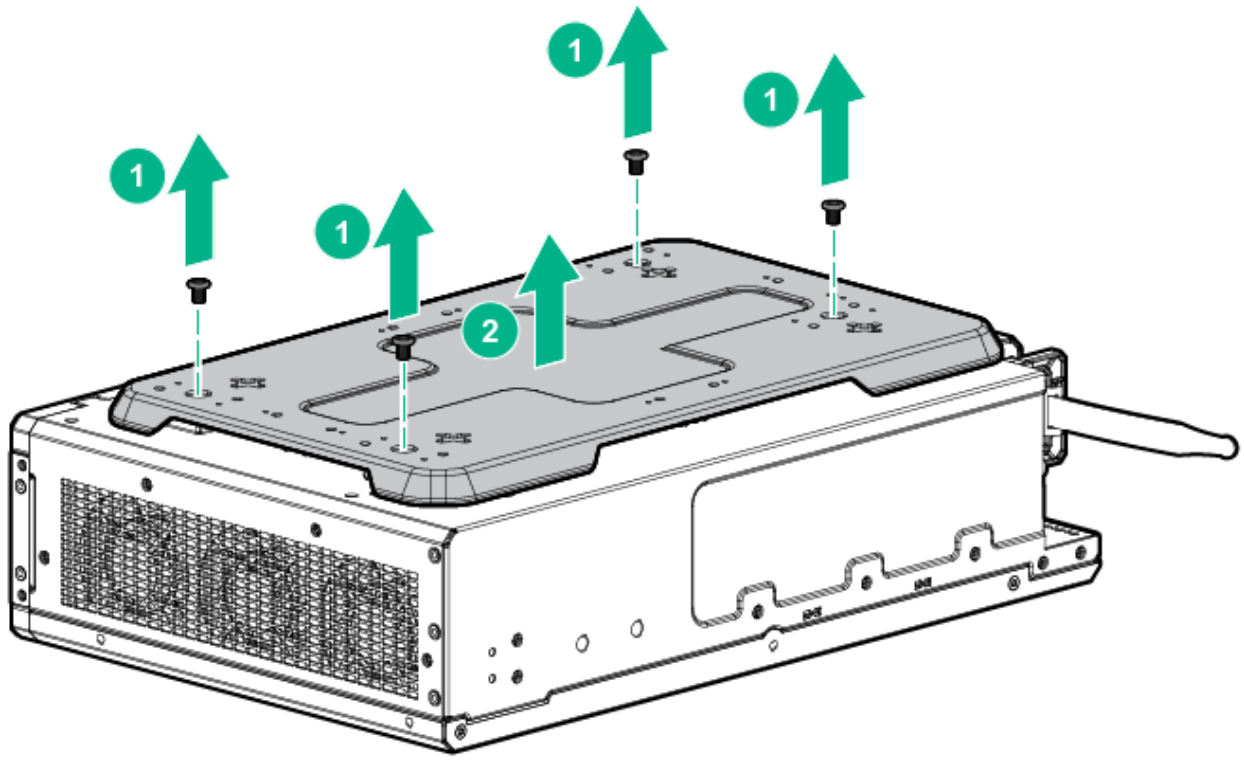

2. Disconnect all cables.

Dismounting the system from a rack mount

Procedure

1. Loosen the 2 captive screws on the front of rack mount shelf.

2. Slide the EL1000 system and shelf out from the rack mounts to the front.
3. Unplug the power cable and disconnect all cables from the system.
4. Remove the system from the shelf assembly by lifting vertically.

Dismounting the system from an ETSI rack mount

Procedure

1. Loosen the 2 captive screws on the front of rack mount shelf.
2. Slide the EL1000 system and shelf out from the rack mounts to the front.
3. Unplug the power cable and disconnect all cables from the system.
4. Remove the system from the shelf assembly by lifting vertically.

Dismounting the system from an Enterprise rack mount

Procedure

1. Slide the system out of the rack.
2. Unplug the power cable and disconnect all cables from the system.
3. Remove the retention bracket from the Enterprise rack mount.
4. Lift and remove the system from the rack mount.

Remove the access panel

Procedure

Using a Torx driver, remove the two T10 Torx screws securing the access panel to the system.

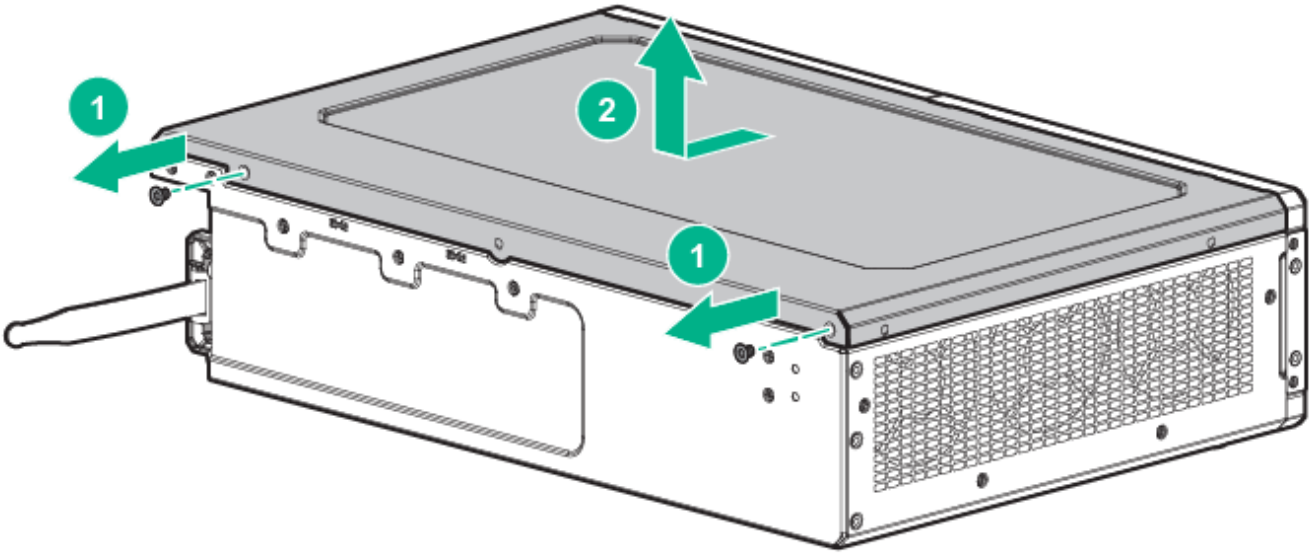

Install the fans

Procedure

1. Align the fan with the fan slots of the system.
2. Squeeze the tabs on either side of the fan, and then slide it into the bay until it clicks in place.

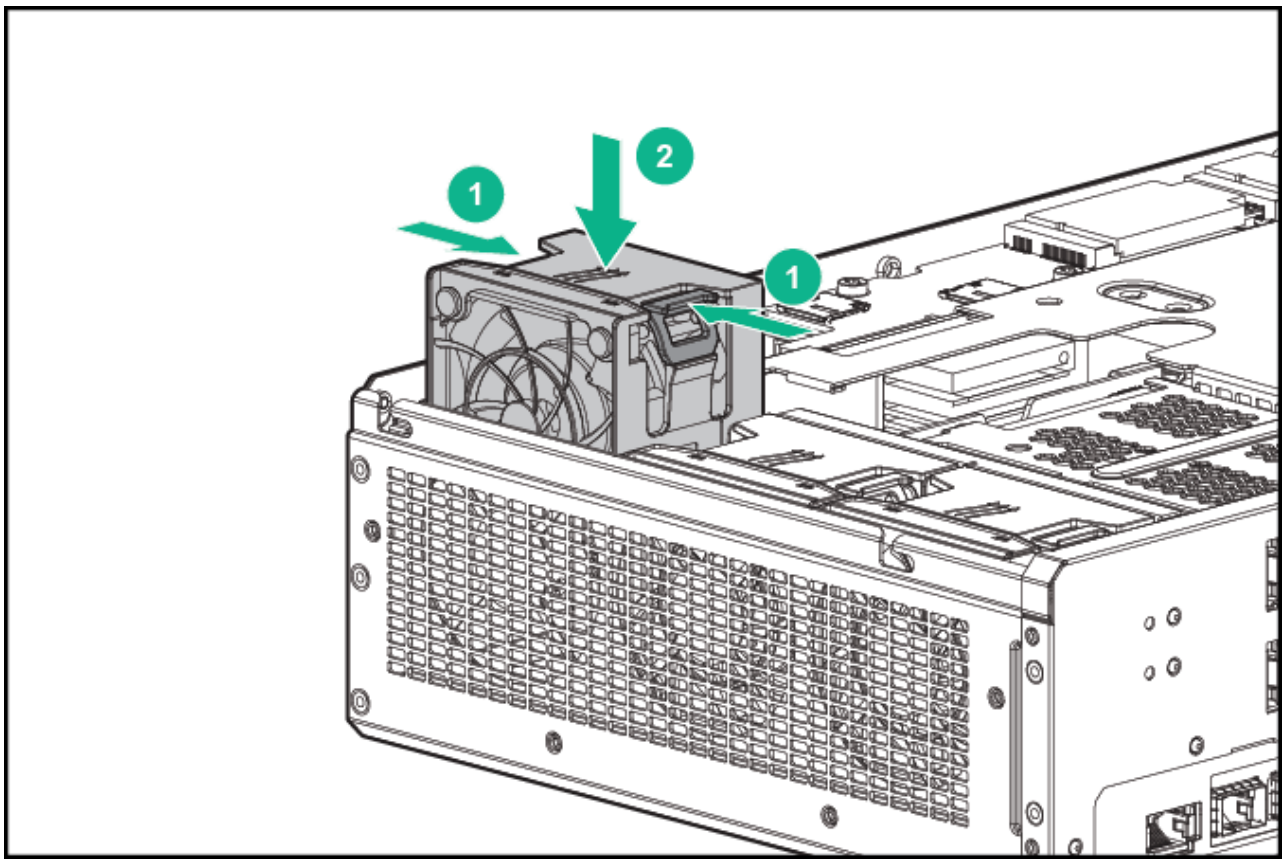

Install the blade

No blade supported on the system support Legacy BIOS Boot mode. For more information, see the user and maintenance guide for your blade.

Procedure

Align and install the blade into the system.

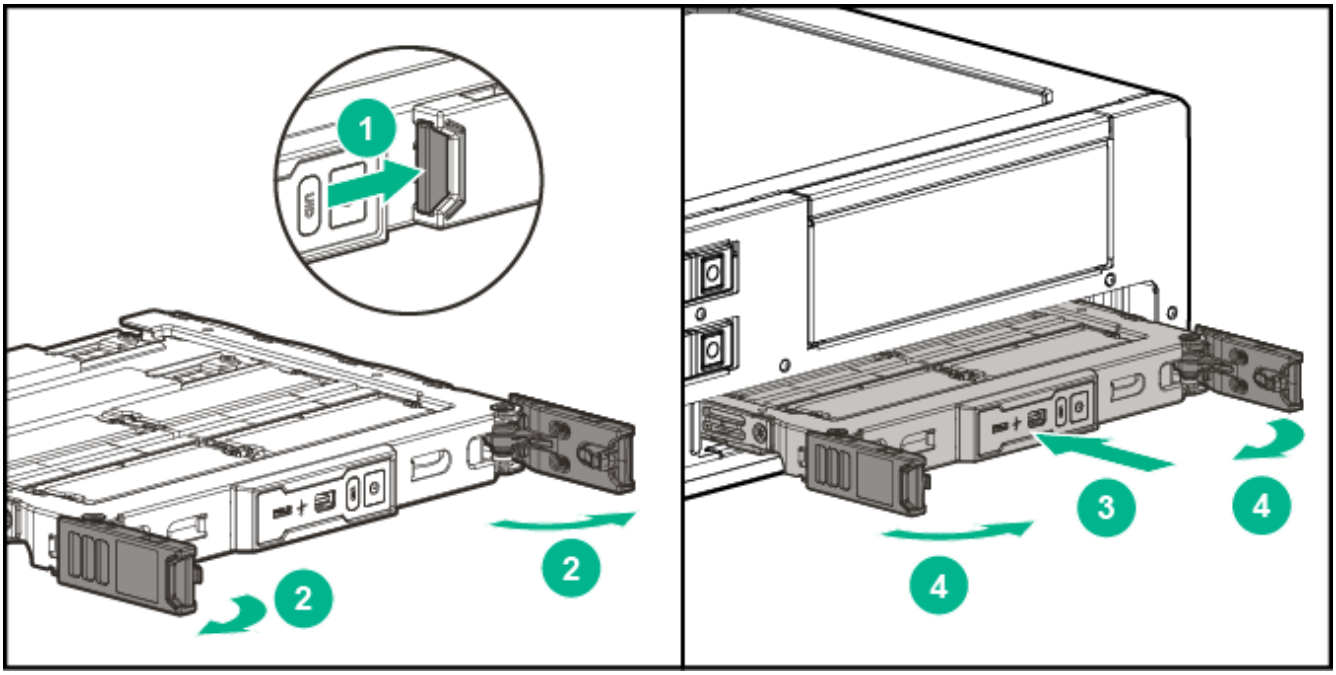

Remove the blade

Procedure

1. Power down the system.
2. Dismount the system.
3. Press the blade latch buttons and open the latches.
4. Remove the blade.

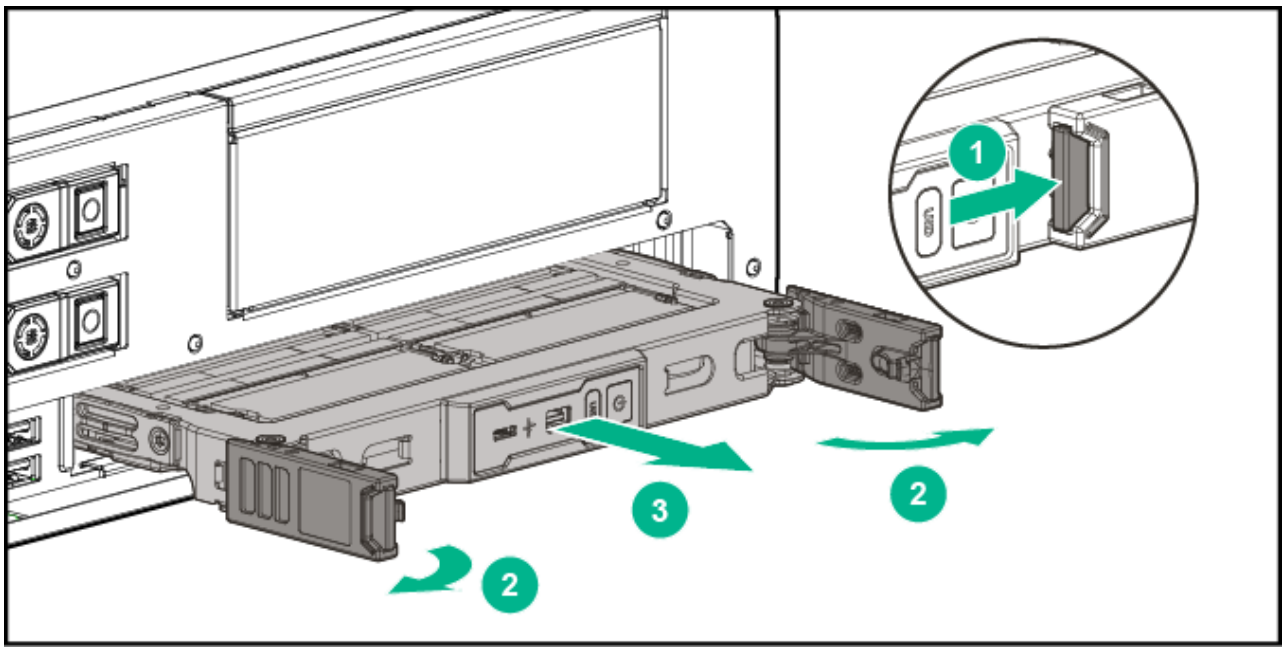

Install the mini-PCIe adapter board

Procedure

1. Align the mini-PCIe adapter board to the system board.
2. Using a Torx driver, insert and tighten the three T-15 Torx screws to secure the adapter board to the system board.

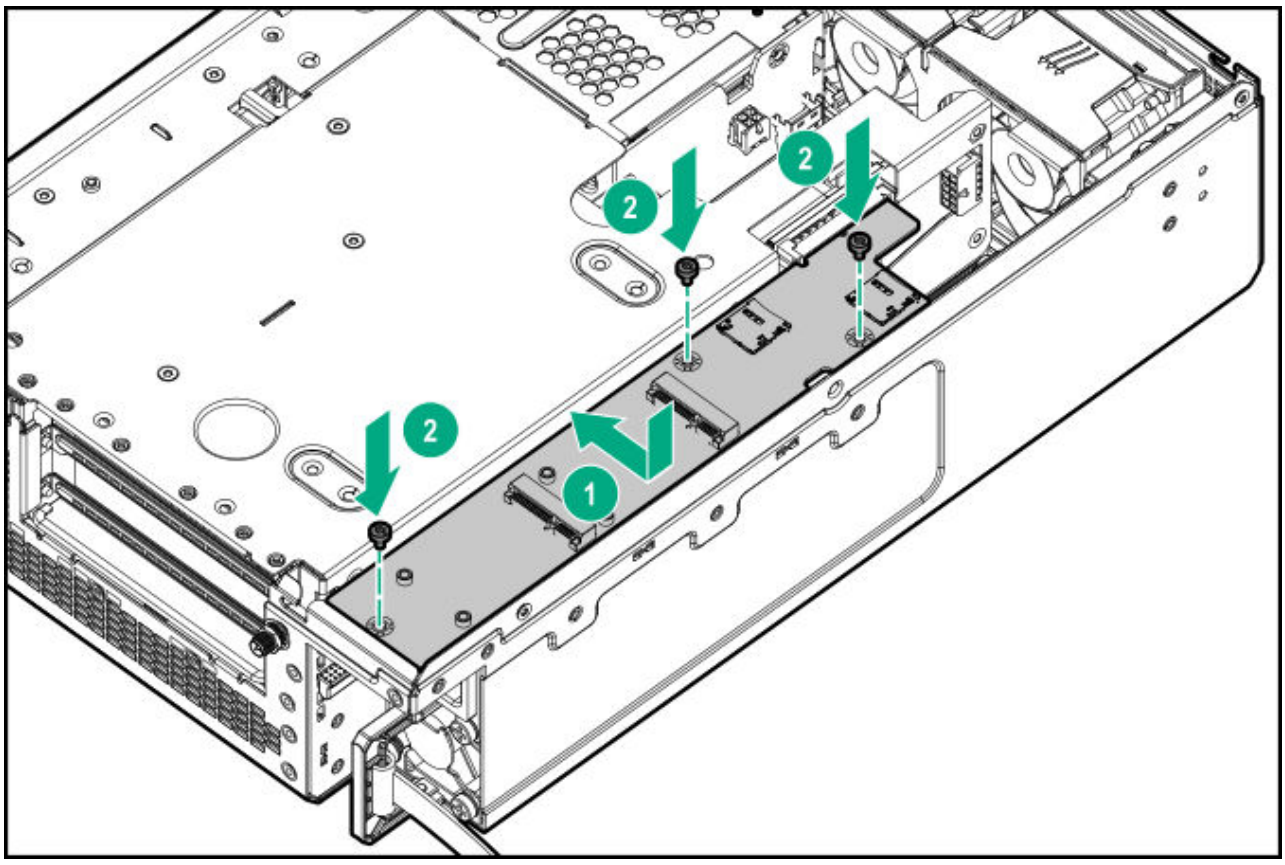

3. Connect the two cables from the mini-PCIe adapter board to the system board:
   a. Connect the power cable.
   b. Connect the drive cable.

Install the antenna

Perform one of the following procedures depending on the type of antenna installed:

- Installing the WiFi or LTE antennas.
- Installing the WiFi and LTE combo antennas.

Installing the WiFi or LTE antennas

Procedure

1. Power down the system.
2. Dismount the system.
3. Locate the correct antenna.

   For antenna connector locations, see PCI right side components or PXI right side components.
4. Install the antenna.

   The antenna shown in the image might be different from that of your system.

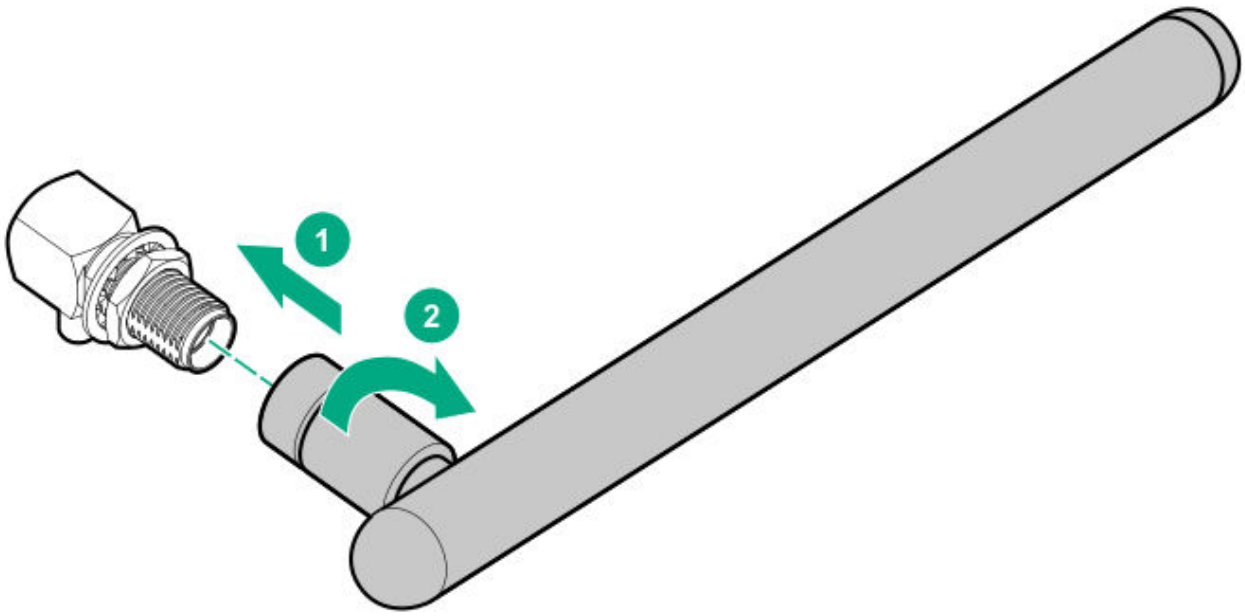

5. Mount the system.
6. Power up the system.

Installing the WiFi and LTE combo antennas

You can connect WiFi antenna cables only, LTE antenna cables only, or the WiFi and LTE antenna cables together.

Procedure

1. Power down the system.
2. Dismount the system.
3. Locate the correct port for installing the antenna cables.

   For antenna connector locations, see PCI right side components or PXI right side components.
4. Install the antenna cable.
5. Mount the system.
6. Power up the system.

Setup

Optional services

For information on the optional services offered, see the product QuickSpecs on the Hewlett Packard Enterprisewebsite (**http://www.hpe.com/info/qs**).

Optimum environment

When installing the system, select a location that meets the environmental standards.

- Temperature requirements
- Power requirements

Temperature requirements

To ensure continued safe and reliable equipment operation, install or position the system in a well-ventilated, climate-controlled environment.

Configuration	Temperature
Chassis with blades installed, but no PCIe cards/PXIe modules installed	Operating temperature of up to 55°C (131°F)

Power requirements

Installation of this equipment must comply with local and regional electrical regulations governing the installation of information technology equipment by licensed electricians. This equipment is designed to operate in installations covered by NFPA 70, 1999 Edition (National Electric Code) and NFPA-75, 1992 (code for Protection of Electronic Computer/Data Processing Equipment). For electrical power ratings on options, see the product rating label or the user documentation supplied with that option.

More information

Power supply specifications

Installing hardware options

Install any hardware options before initializing the system. For options installation information, see the option documentation. For system-specific information, see Hardware options installation.

Registering the product

To experience quicker service and more efficient support, register the product at the **Hewlett Packard Enterprise Product Registration website**.

Hardware options installation

Installing the wall mounting option kit

Procedure

1. Using the wall mount bracket, mark the locations for the wall mount screws.
2. Install the wall mount anchors and screws in the marked locations.
3. Align the wall mount bracket to the system.
4. Using a Torx driver, insert and tighten four T15 Torx screws to secure the bracket to the system.

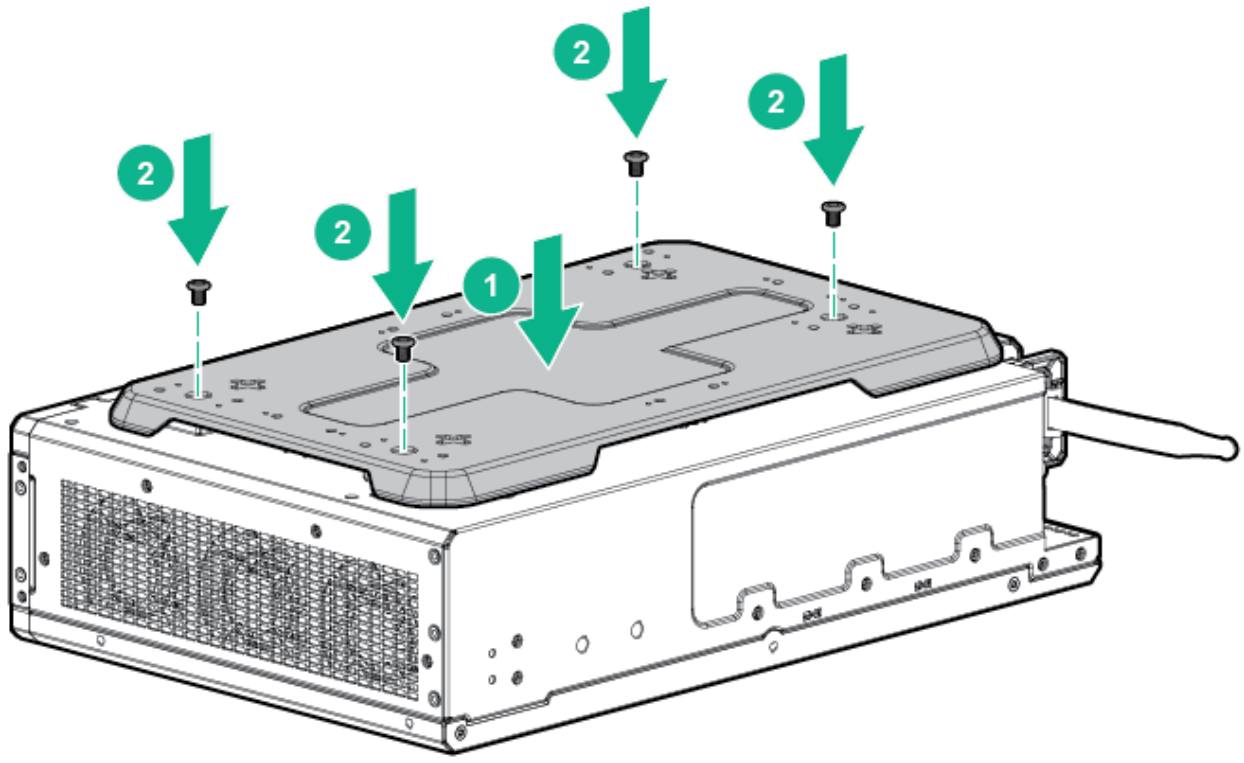

5. Place the holes in the wall mount bracket over the wall mounting screws and slide to lock into place.

Installing the rack mounting option kit

The following rack kits are available:

- A 19 inch rack kit
- A 23 inch rack kit

Procedure

1. Align the rack mount bracket to the system.
2. Using a Torx driver, insert and tighten the four T-10 Torx screws to secure the bracket to the system:
    - 19 inch rack kit

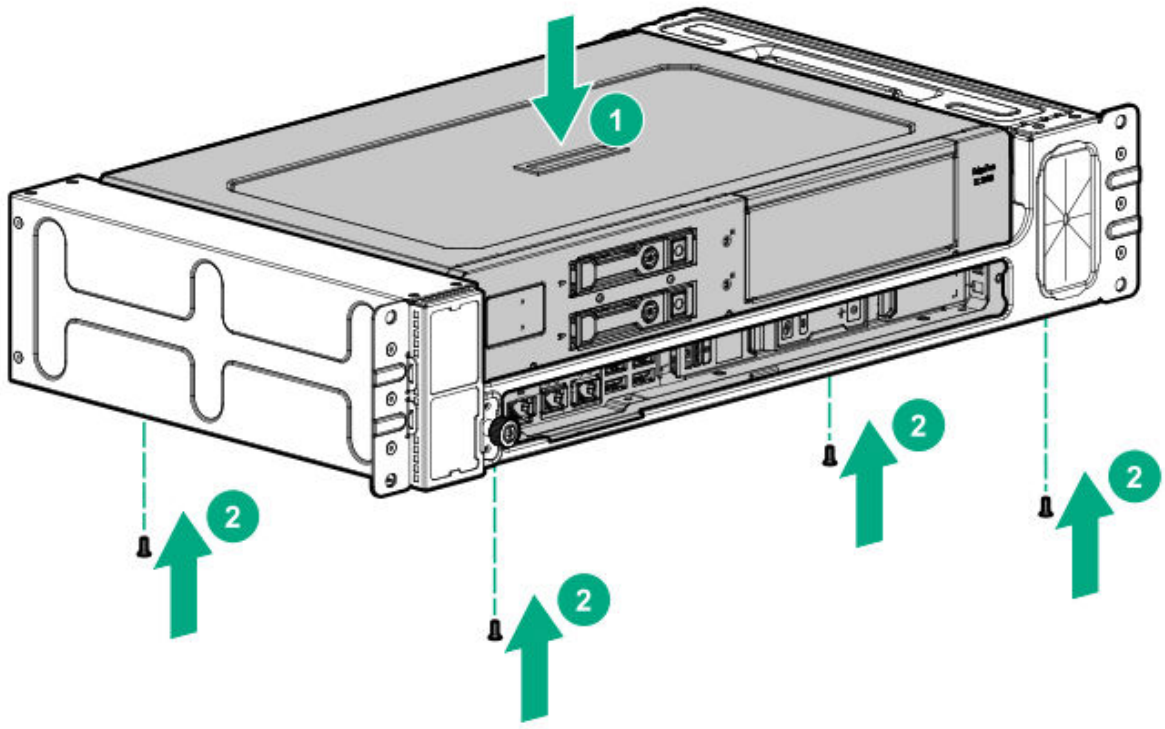

    - 23 inch rack kit

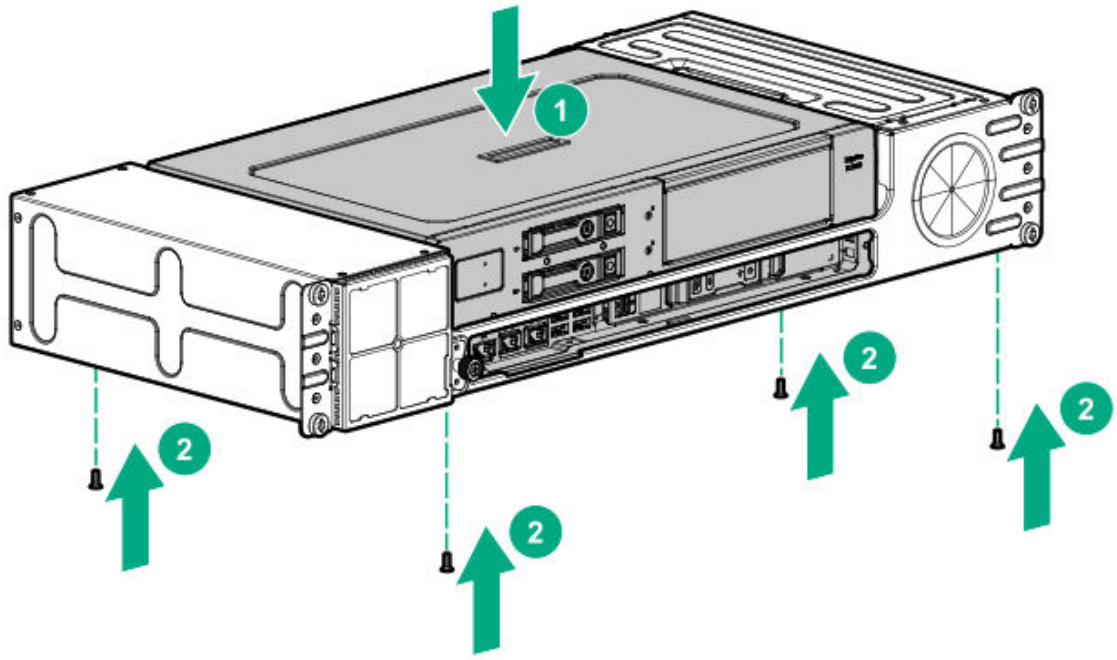

3. Install the system in the rack mount.

Installing the ETSI rack mounting option kit

Procedure

1. Align the rack mount bracket to the system.
2. Using a Torx screwdriver, insert and tighten four T-10 Torx screws to secure the bracket to the system.

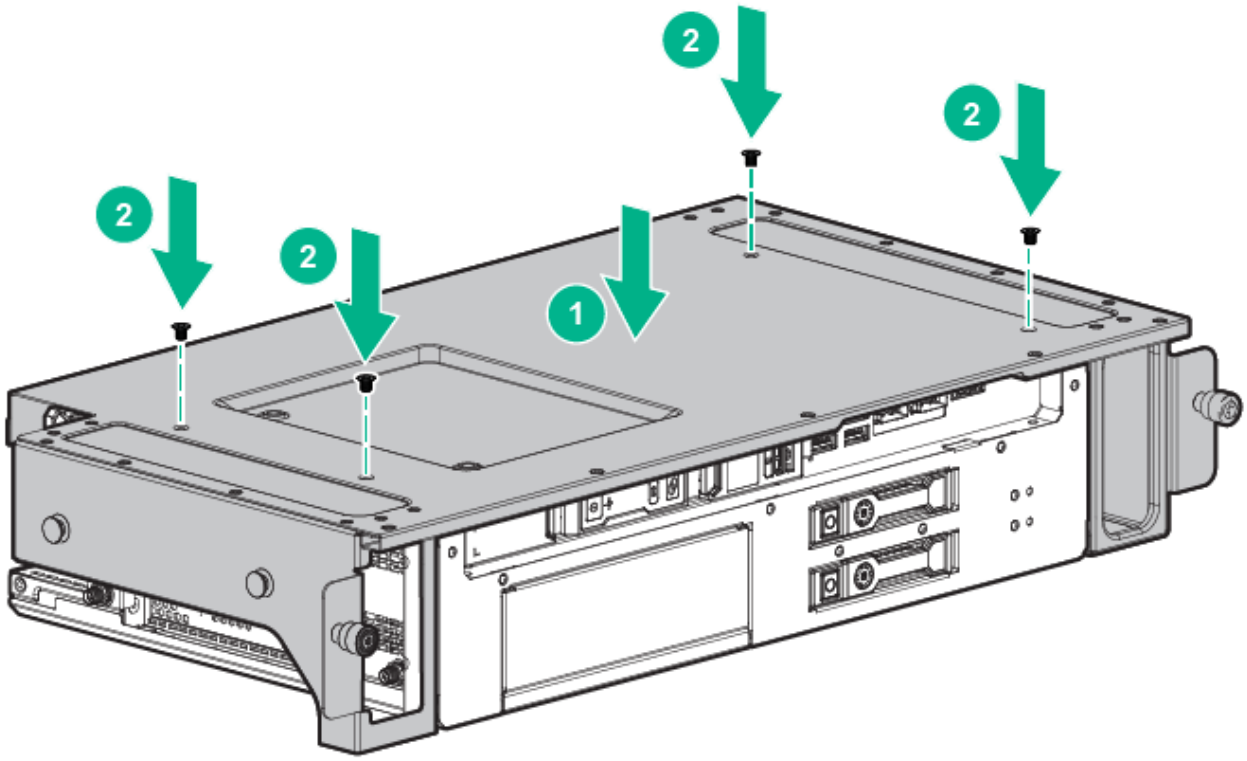

3. Install the ETSI brackets to the rack:
   a. Align the bracket to the rack rail.
   b. Using a Torx screwdriver, insert and tighten two T-20 Torx screws to secure each bracket to the rack rail.
4. Align the system to the ETSI bracket.
5. Secure the system in the ETSI rack mount.

Installing the Enterprise rack mounting option kit

Procedure

1. Install the rails on the rack.

   For more information on installing the rack rails, see the Quick Deploy Rail System Installation Instructions that ships with the rack hardware kit.
2. Install the cable management arm.

For more information on installing the cable management arm, see the HP 1U Cable Management Arm Option Installation Instructions that ships with the cable management arm kit.

3. Install the Enterprise rack mount onto the rails.

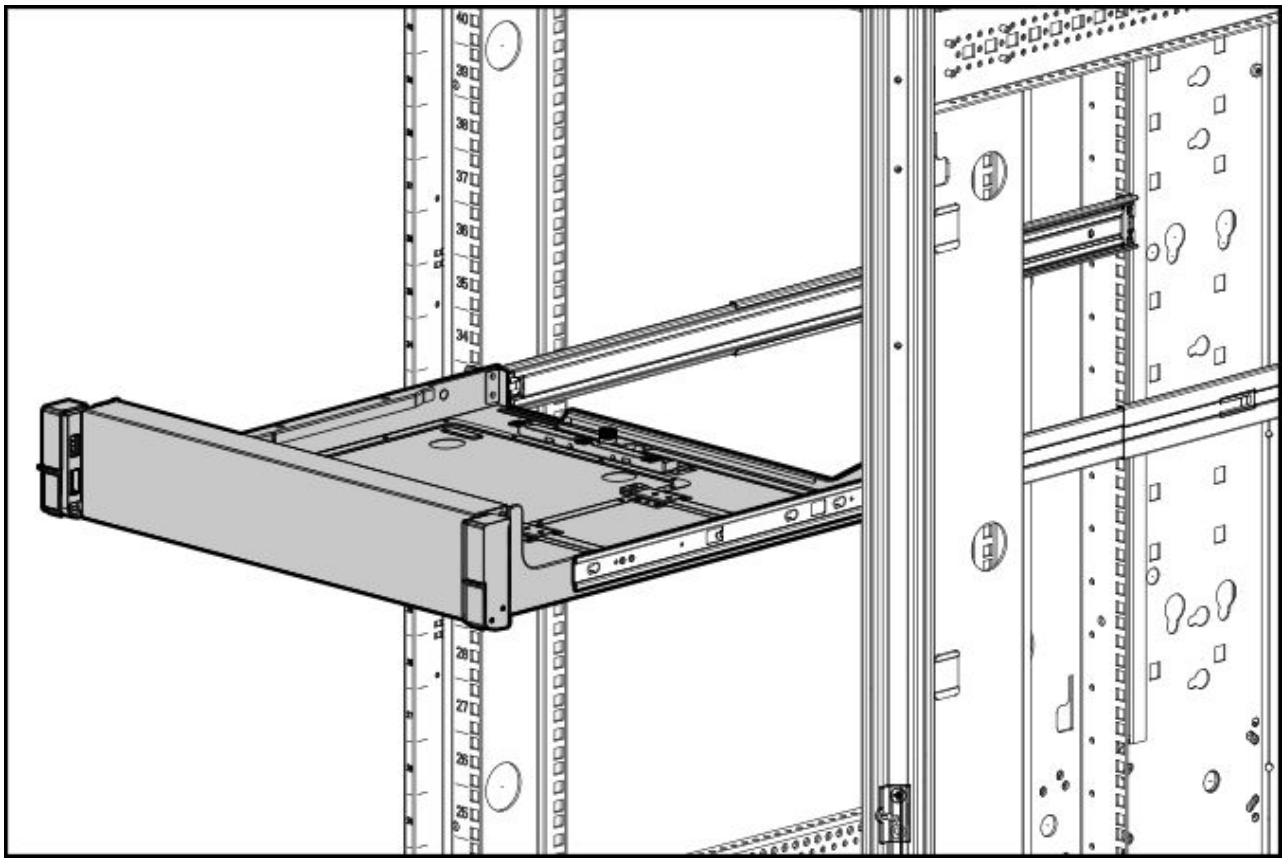

4. Remove the system retention bracket from the Enterprise rack mount.

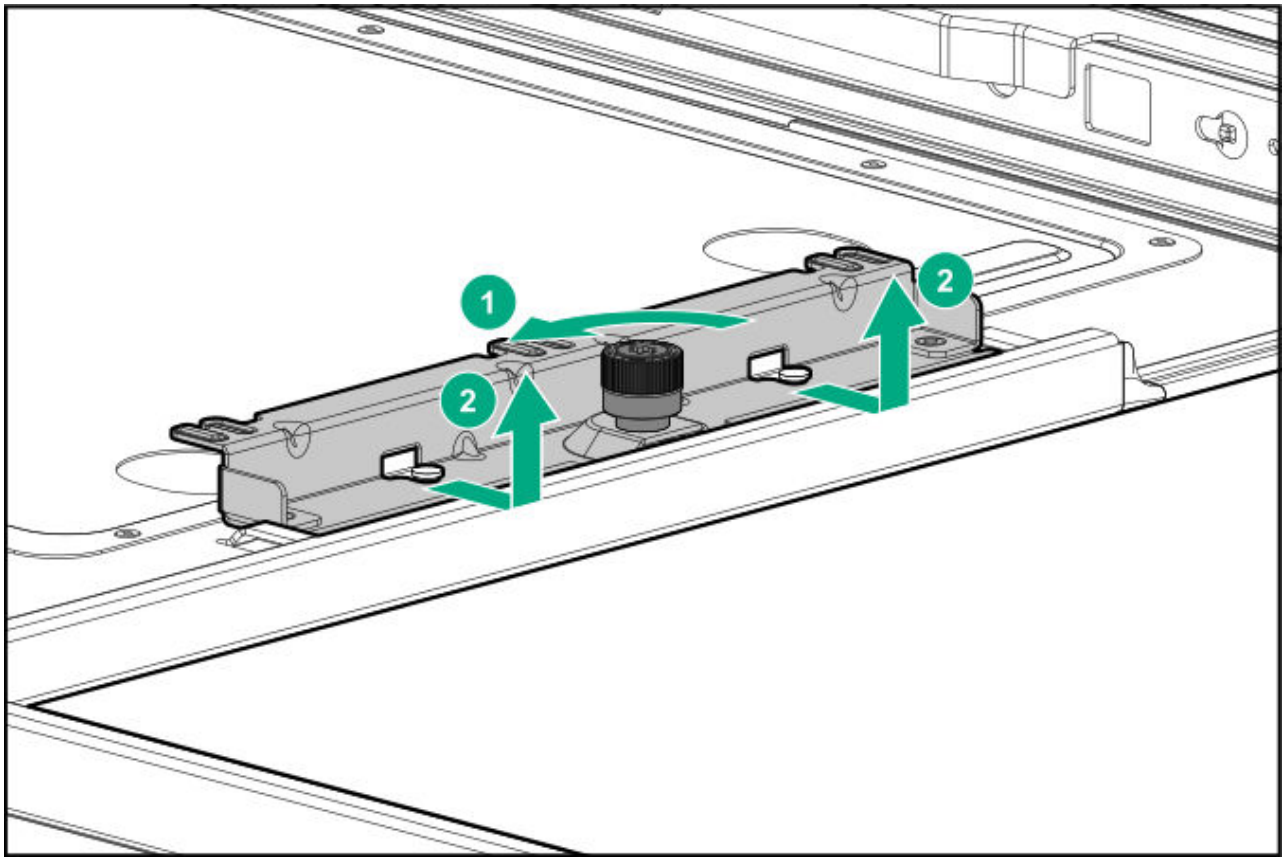

5. Align and install the system.

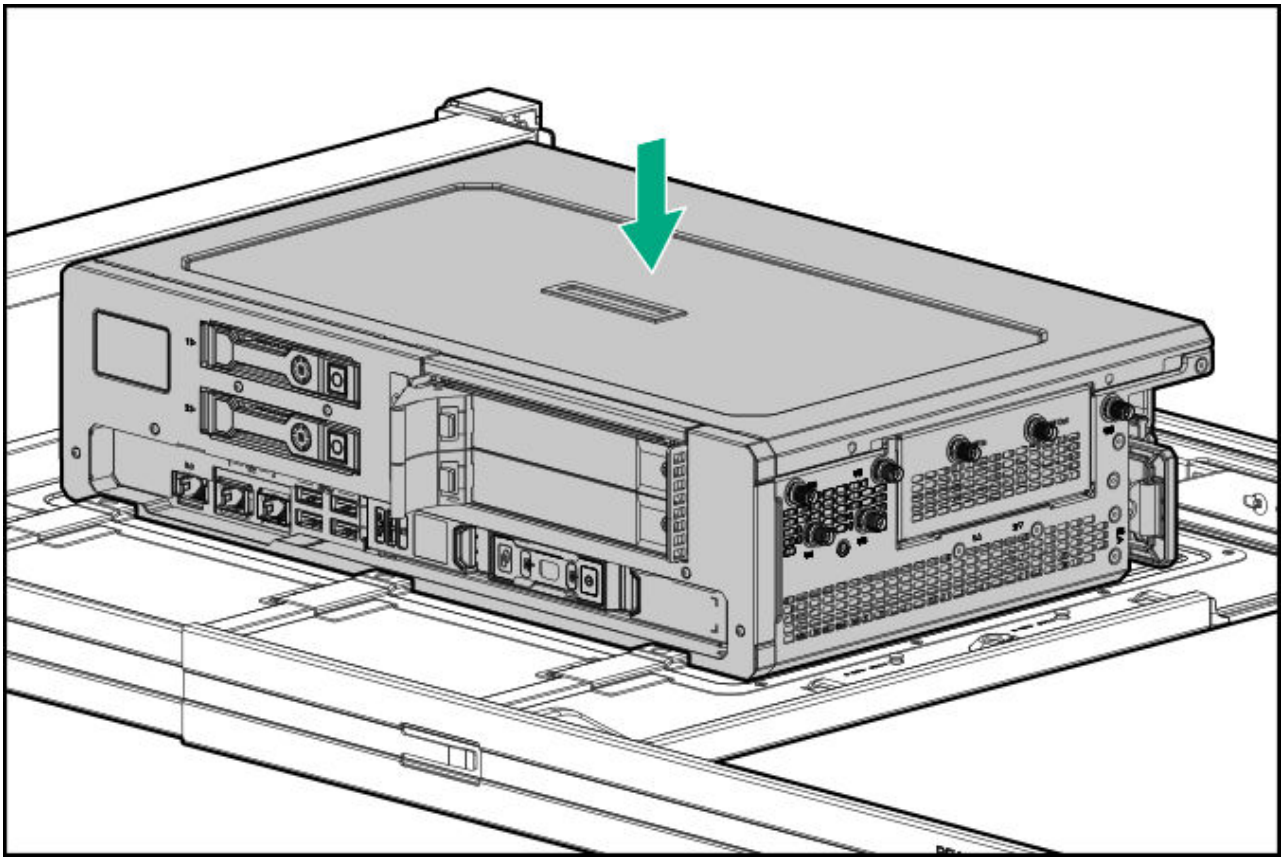

6. Install the retention bracket.

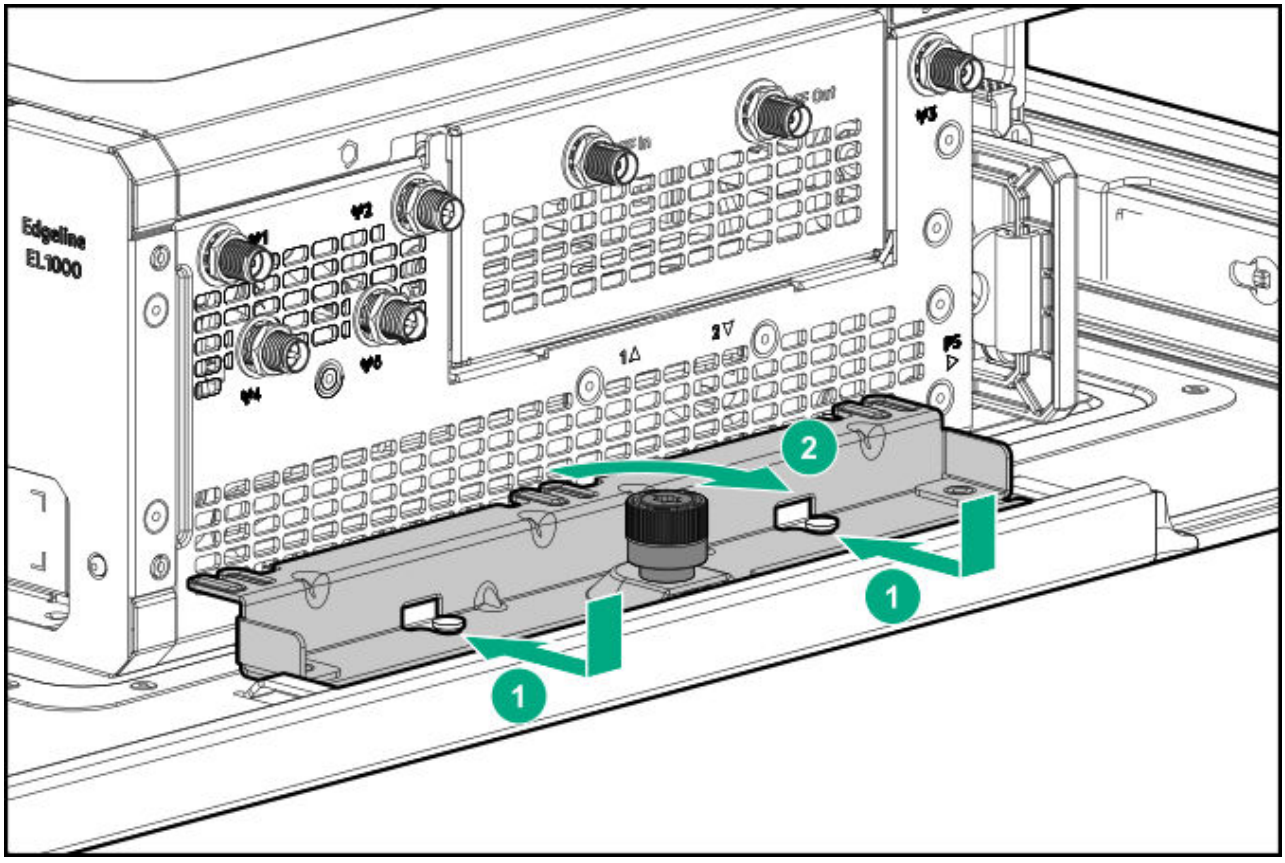

Installing the drive

Procedure

1. Align the drive to the drive bay, and slide it into the bay until it clicks in place.
2. Close the locking latch to secure the drive.

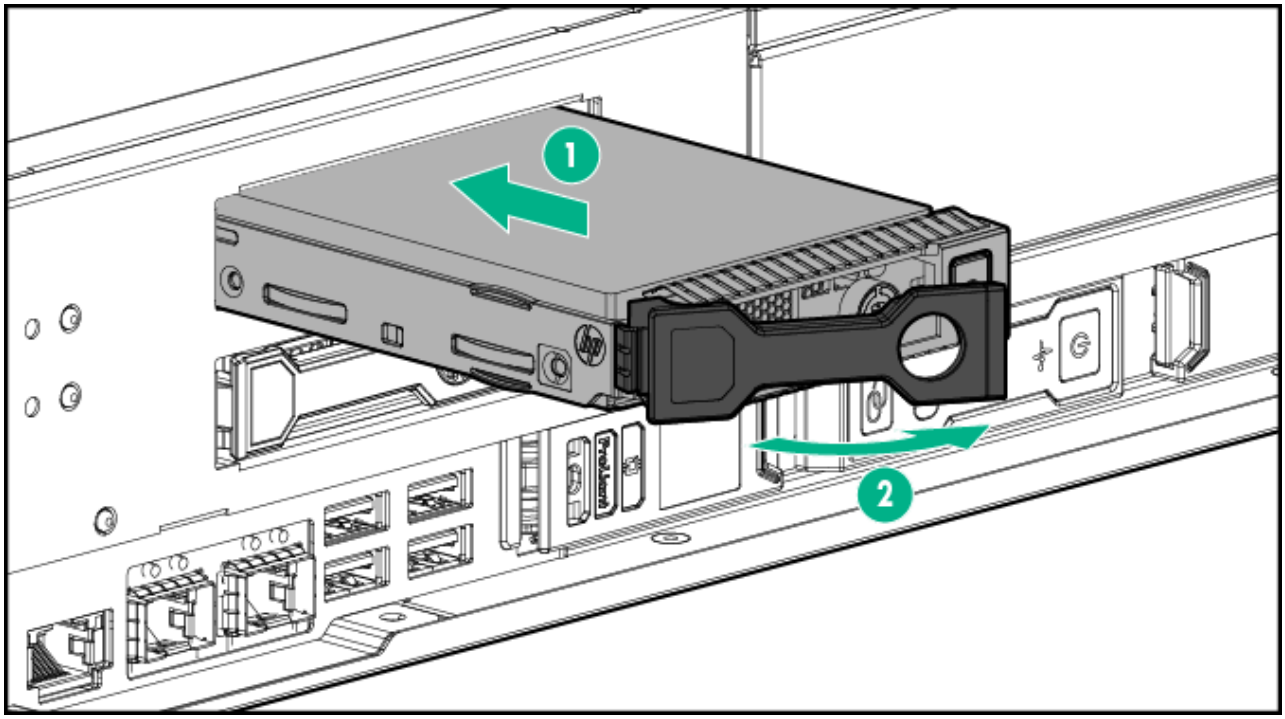

Installing the card options

Depending on the configuration of your system, perform one of the following procedures:

- Install the PCIe card
- Install the PXI/PXIe card

Install the PCIe card

The system supports optional PCIe cards.

IMPORTANT: The PCIe card is not hot-pluggable. The system must be powered down to install this card.

Procedure

1. Power down the system.
2. Remove the blade, if installed.

3. Remove the access panel.
4. Using a Torx driver, remove the three black T-15 Torx screws.
5. Lift the PCIe riser cage using the finger hold positions in the riser cage.

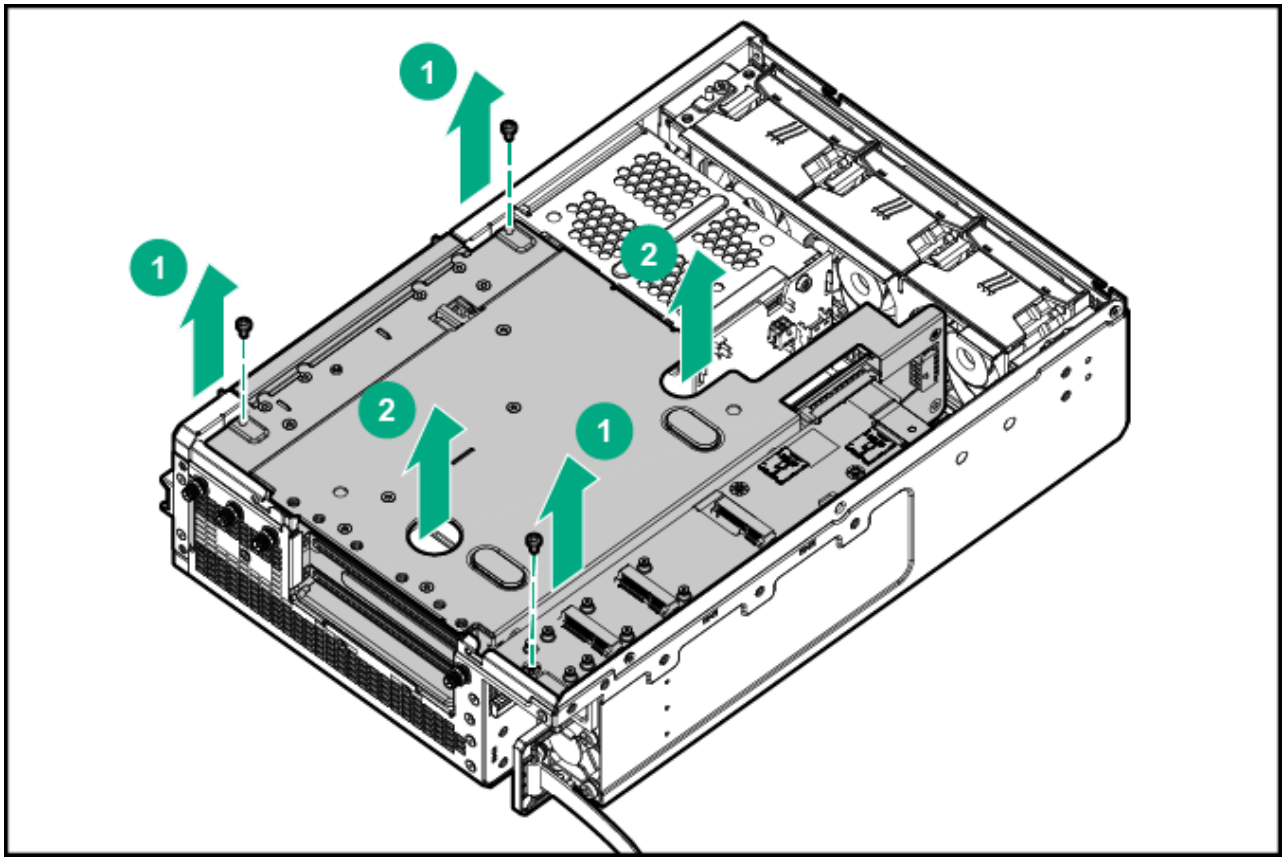

6. Disconnect the power cable.

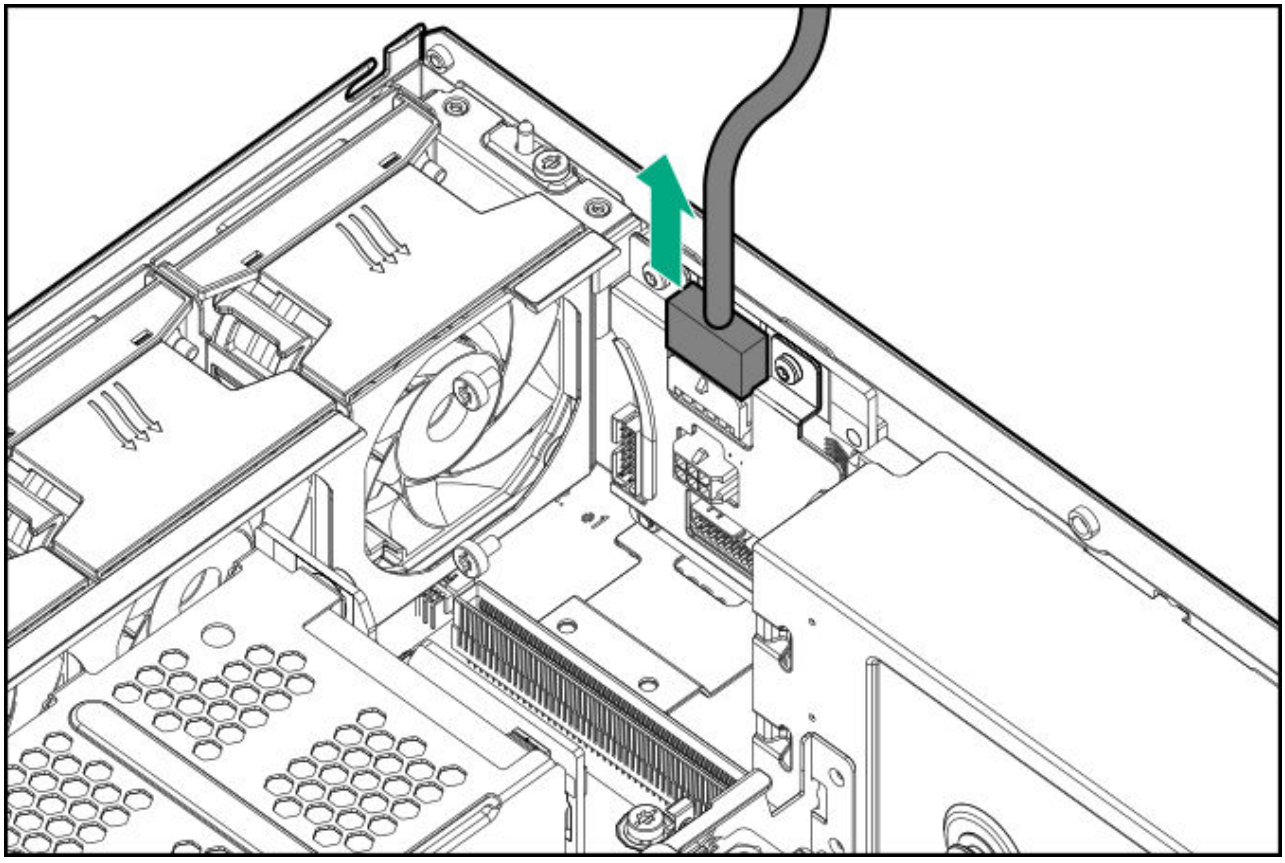

7. Disconnect the hard drive backplane cable and any other cables that connect to the PCIe cards.
8. Align the PCIe card to the PCIe slot on the side of the system, and then slide it in until it clicks in place.

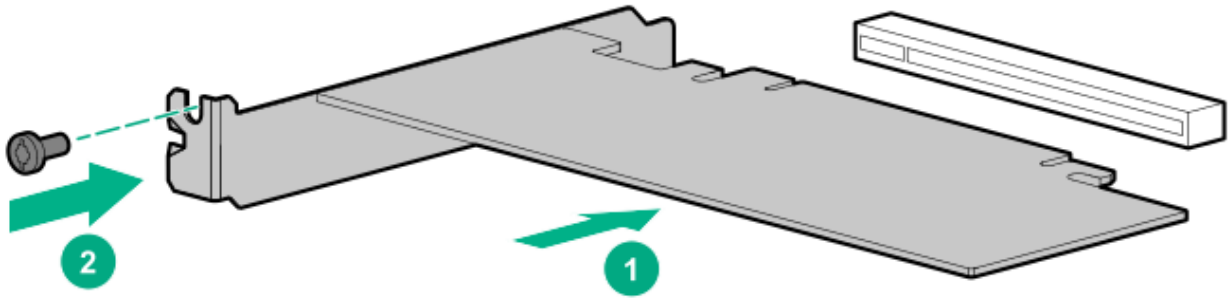

Install the PXI/PXIe card

The system supports optional PXI cards.

NOTE:

The PXI/PXIe card is not hot-pluggable. The system must be powered down to install this card.

Procedure

1. Power down the system.
2. Remove the PXI/PXIe blank screws, and then remove the blank.

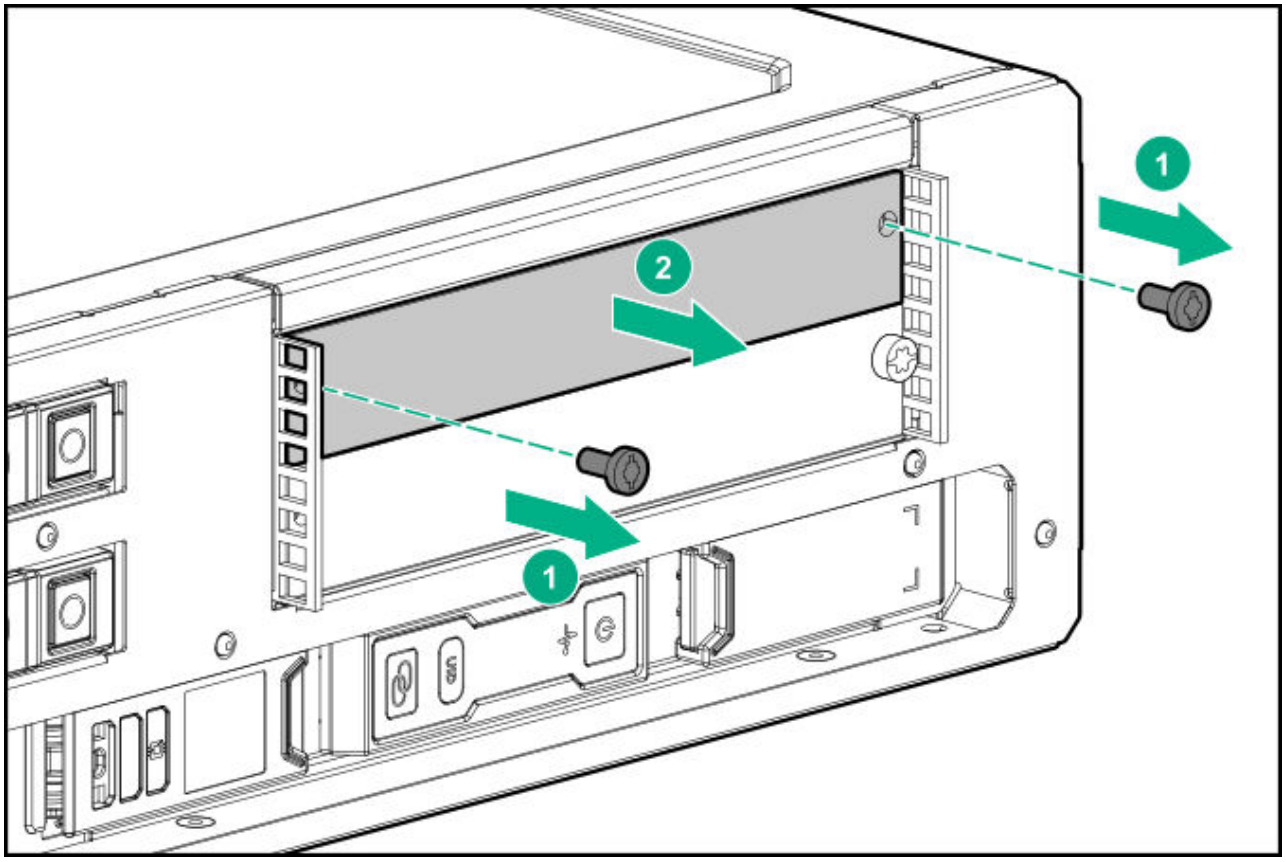

3. Align the PXI/PXIe card to the PXI/PXIe slot in the front panel.
4. Bend the tab and slide the PXI/PXIe card in until it clicks in place.
5. Install the PXI/PXIe card slot screws.

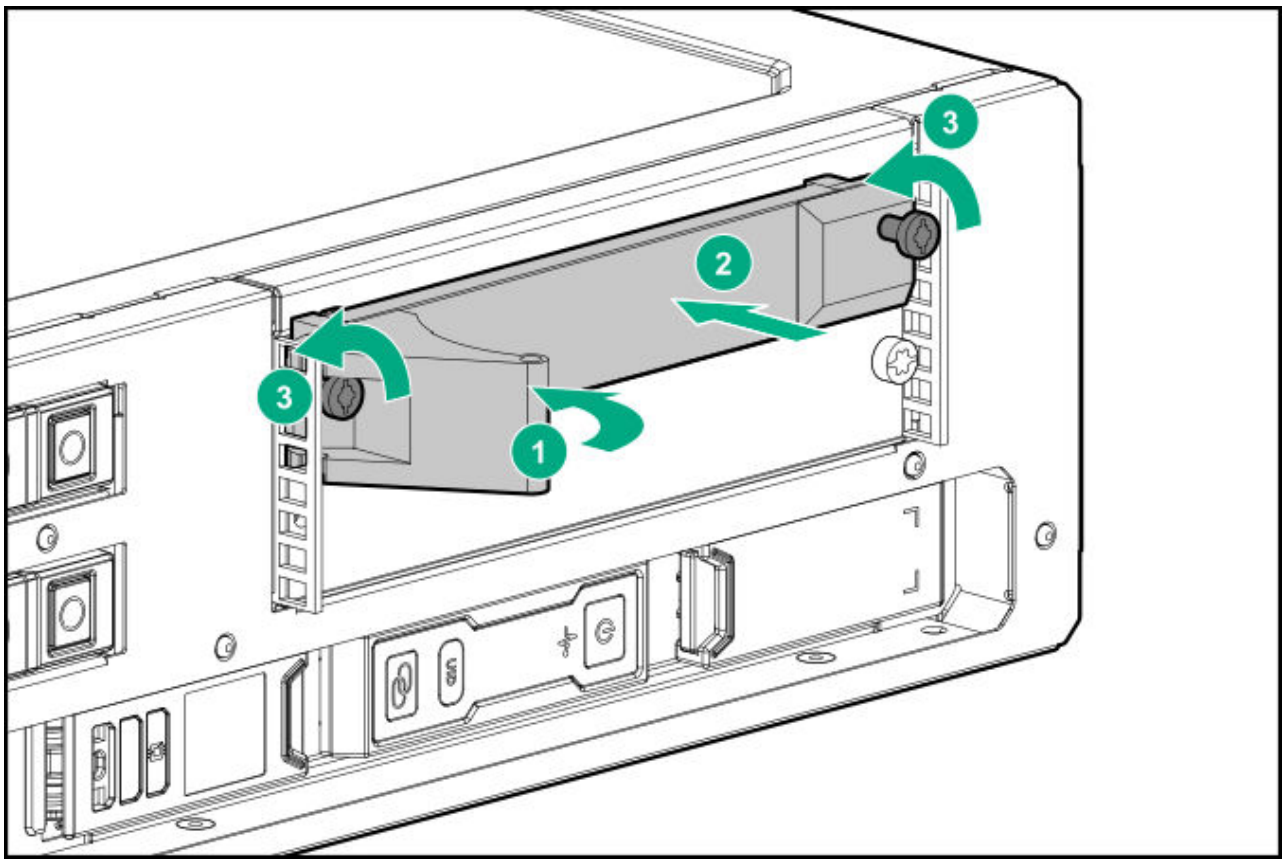

Installing the mini-PCIe module options

You can install the following mini-PCIe modules on the mini-PCIe adapter board:

- Up to two half-length mini-PCIe WiFi modules
- Up to two full-length mini-PCIe LTE modules

Wireless certification qualifies LTE option in mini-PCIe module slot 1 and WiFi option in mini-PCIe module slot 2.

Install a half-length mini-PCIe WiFi module option

You will need a half-length mini-PCIe module adapter provided with the WiFi option kit to install this option.

Procedure

1. Power down the system.
2. Remove the blade, if installed.
3. Remove the access panel.
4. Install the adapter using the two holes of the half-length mini-PCIe module.

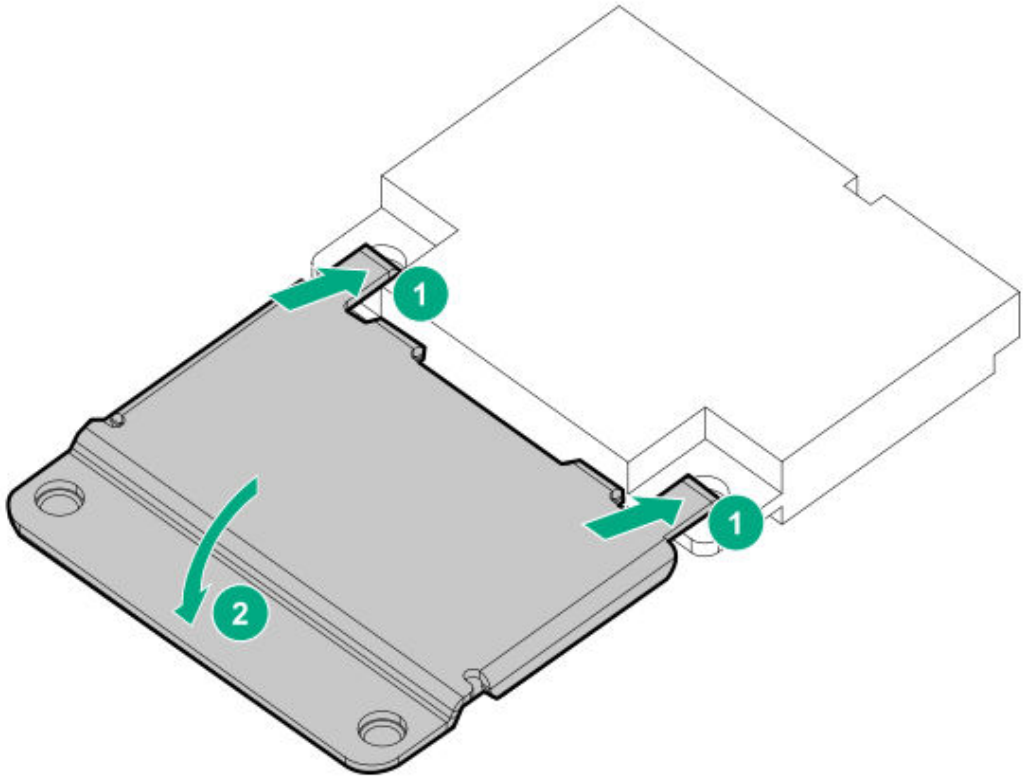

5. Insert the mini-PCIe module connector into the slot.
6. Using a Phillips screwdriver, insert and tighten the two screws to secure the mini-PCIe module to the board.

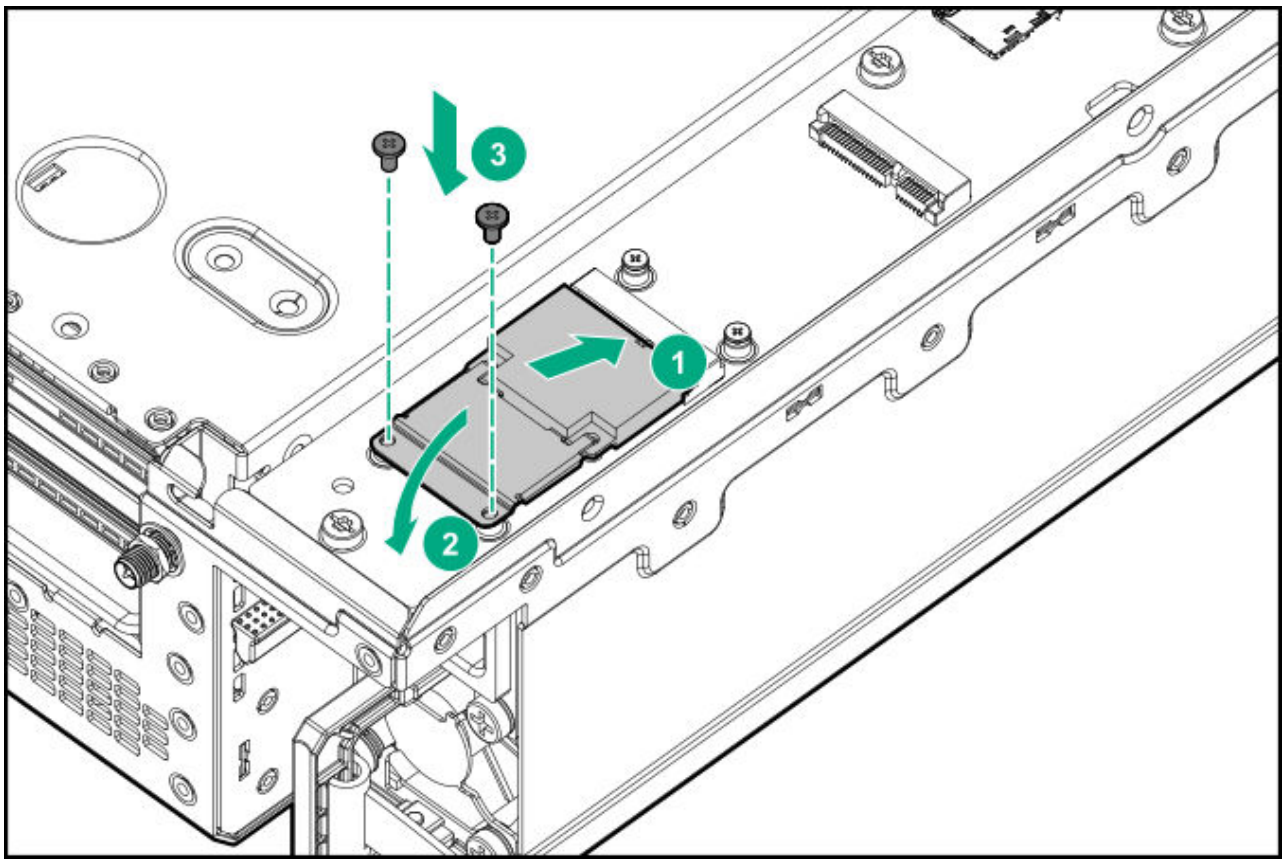

7. Install the two internal antenna cables on the antenna connectors on the module.
8. Install the two internal antenna cables to the antenna connector ports.

   For antenna connector locations, see PCI right side components or PXI right side components.

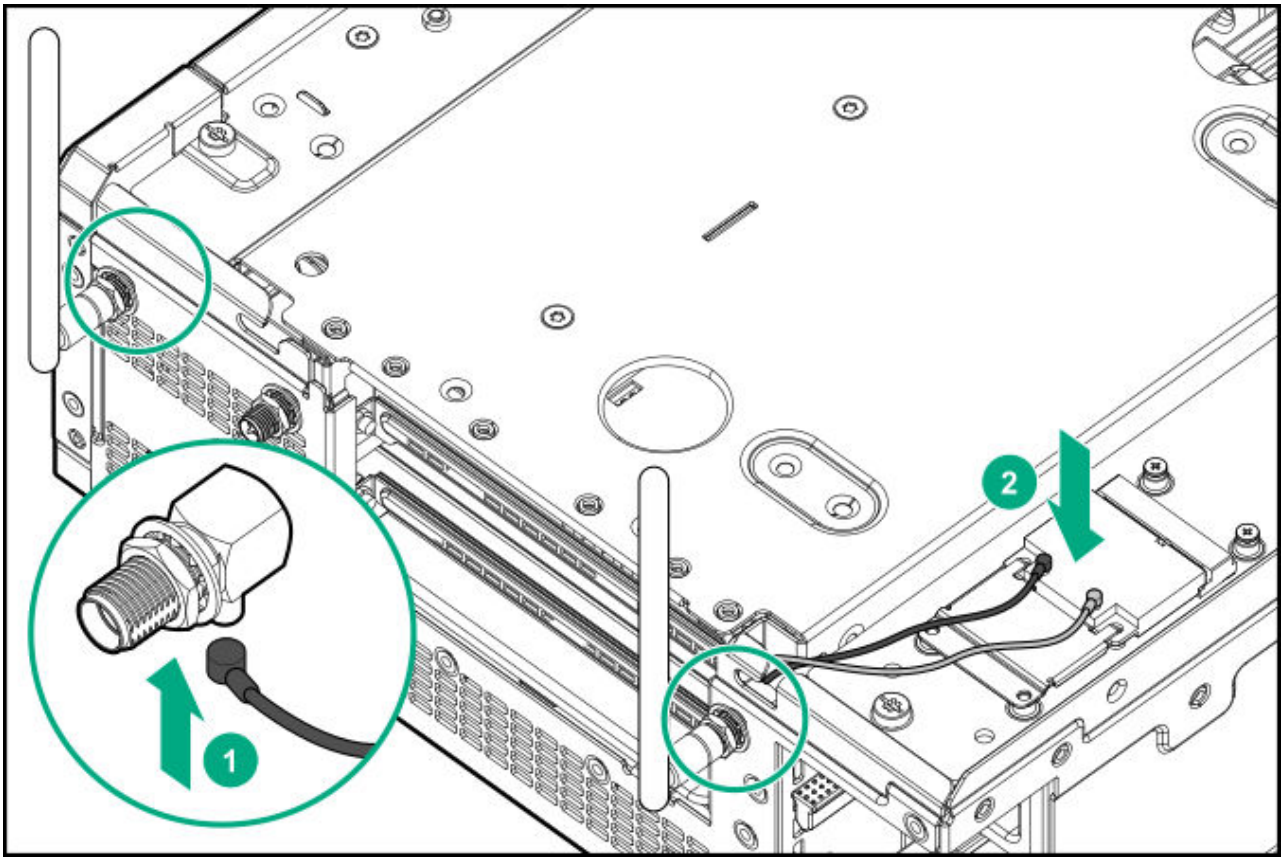

9. Install the antenna.

Installing a full-length mini-PCIe LTE module

Procedure

1. Power down the system.
2. Remove the blade, if installed.
3. Remove the access panel.
4. Align the full-length mini-PCIe module with the full-length slot on the mini-PCIe adapter board.
5. Insert the mini-PCIe module connector into the slot.
6. Using a Phillips screwdriver, insert and tighten the two screws to secure the mini-PCIe module to the board.

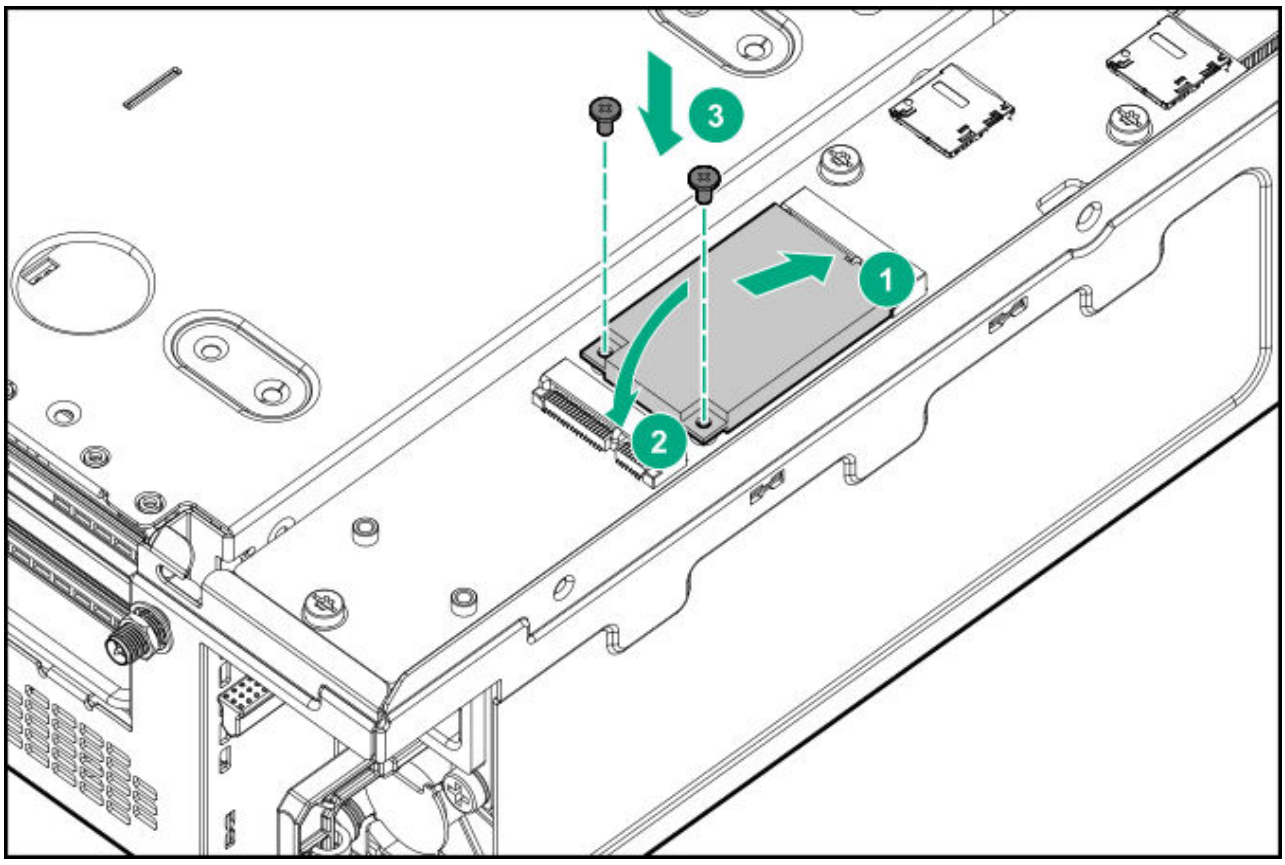

7. Install the two internal antenna cables on the antenna connectors on the module.
8. Install the two internal antenna cables to the antenna connector ports.

   For antenna connector locations, see PCI right side components or PXI right side components.

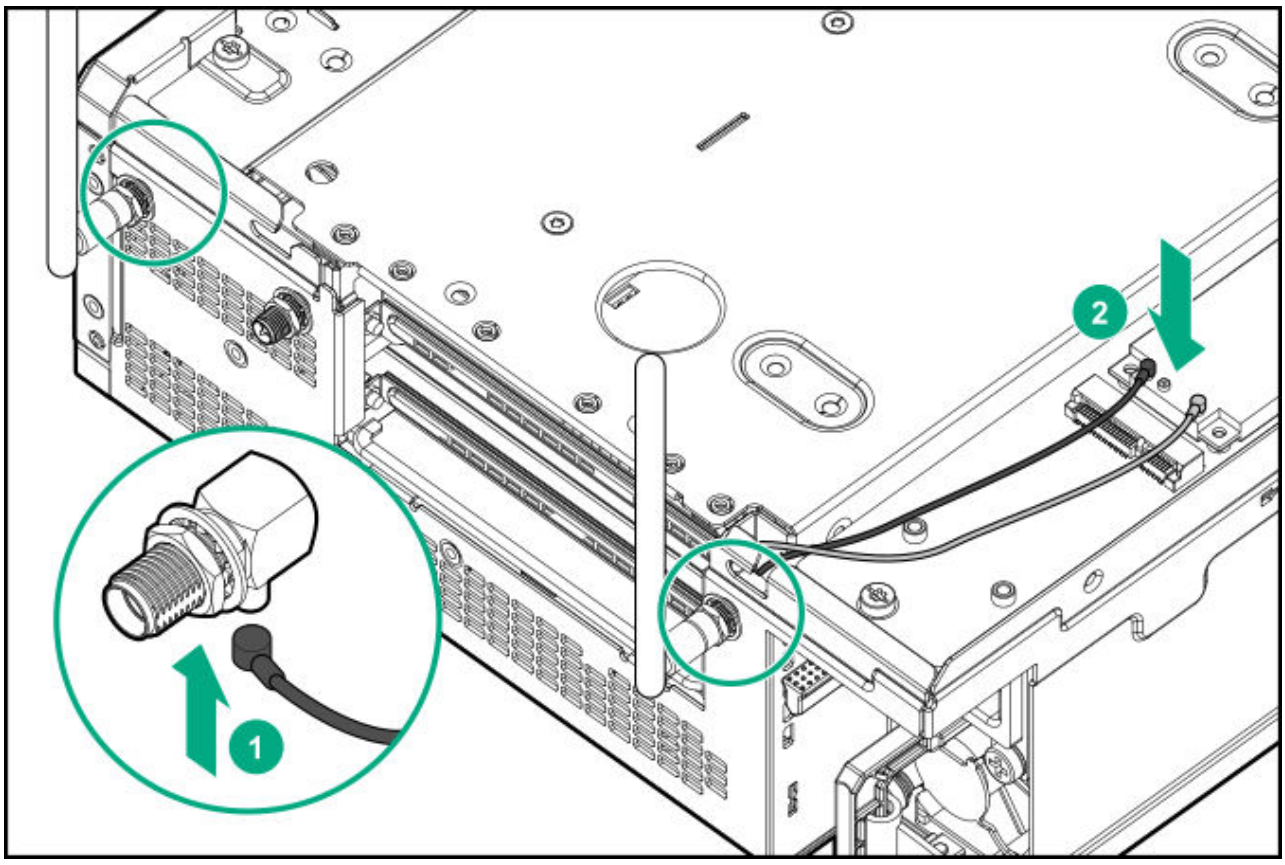

9. Install the antenna.

Installing the NVMe M.2 SSD option

> **IMPORTANT:** When installing the M.2 SSD adapter card, the top slot of the PCI cage is preferred as slot 1.

Prerequisites

Before you perform this procedure, make sure that you have the following items available:

- T-15 screwdriver
- Philips screwdriver
- NVMe SSD module

Procedure

1. Power down the system.

2. Remove the blade, if installed.
3. Remove the access panel.
4. Using a Torx screwdriver, remove the three black T-15 Torx screws.
5. Lift the PCIe riser cage using the finger hold positions in the riser cage.

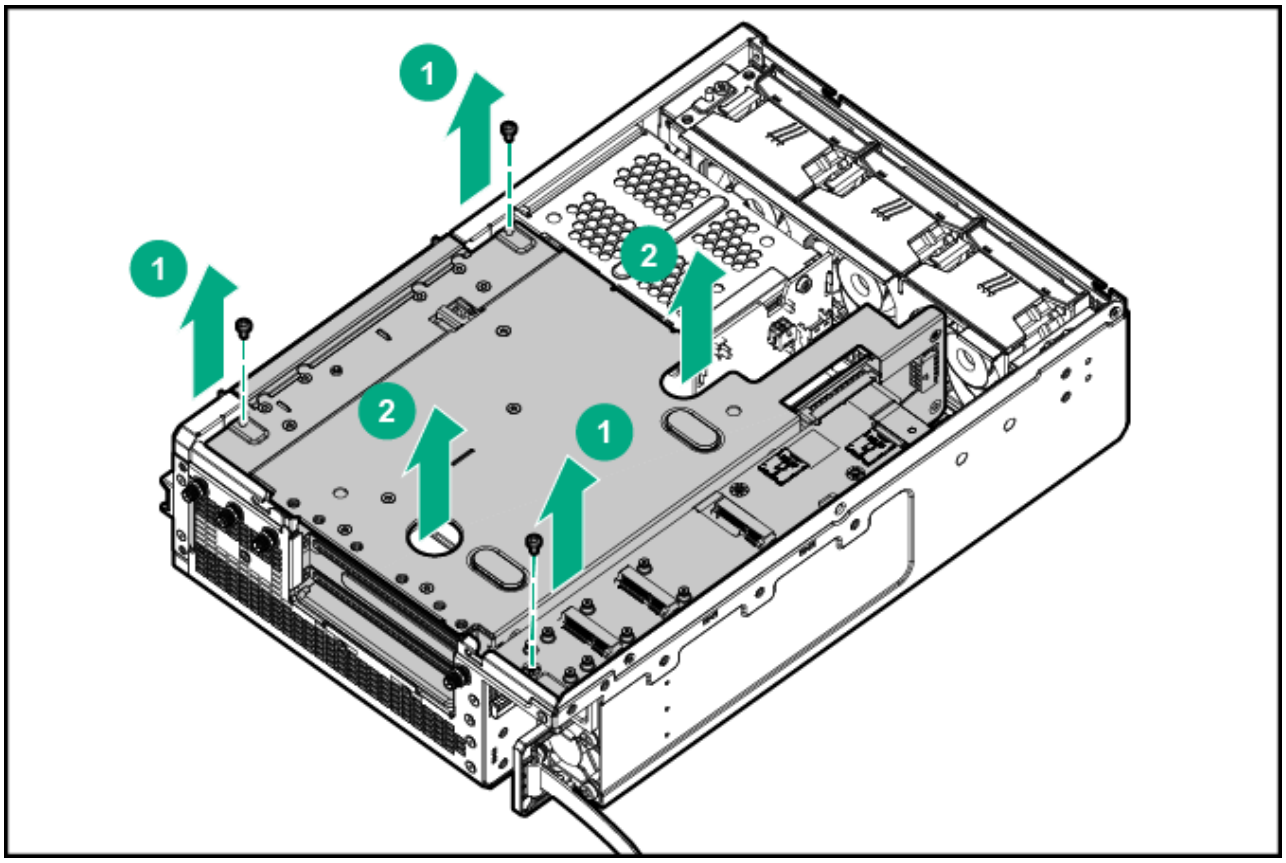

6. Remove the slot blank from the PCI cage.

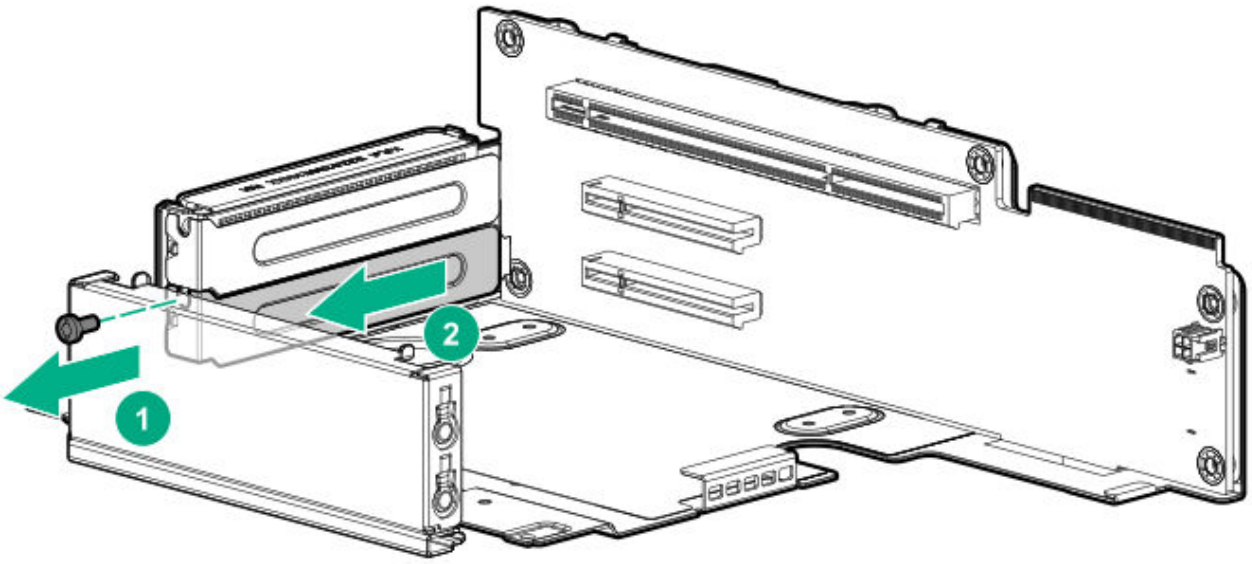

7. Install the NVMe M.2 SSD on Bay 1 of the adapter card:
   a. Insert the SSD into the SSD slot at a 45 degree angle.
   b. Carefully press the SSD down to the horizontal position.
   c. Install the SSD mounting screw.
   d. Repeat the process for Bay 2 if you are installing a second SSD module.

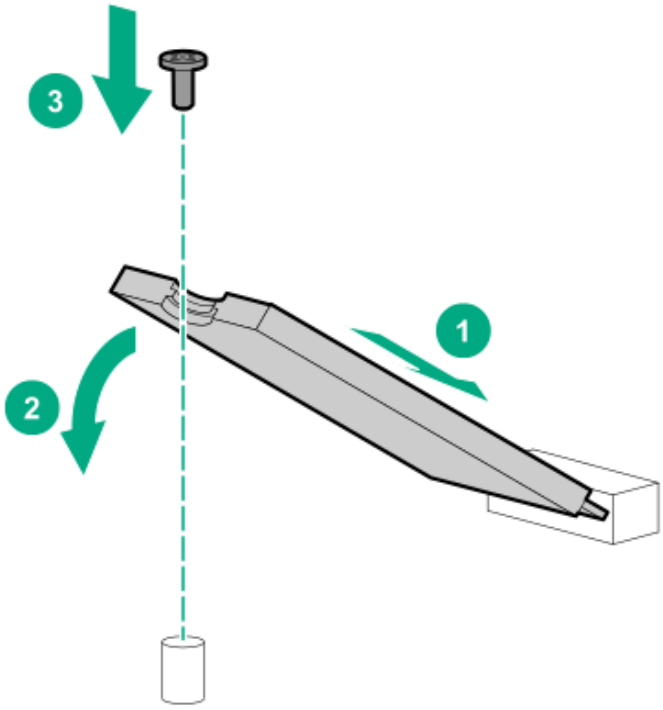

8. Install the M.2 adapter, with the SSD modules installed, on the PCIe cage and secure it with T-15 screw.
   - M.2 adapter installed in slot 1

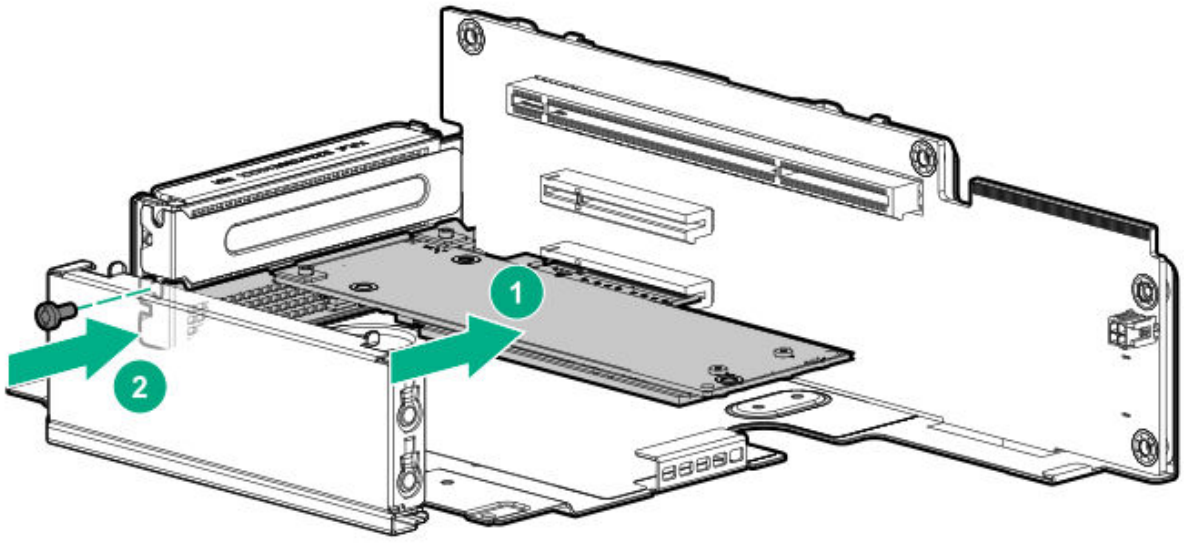

   - M.2 adapter installed in slot 1 and 2

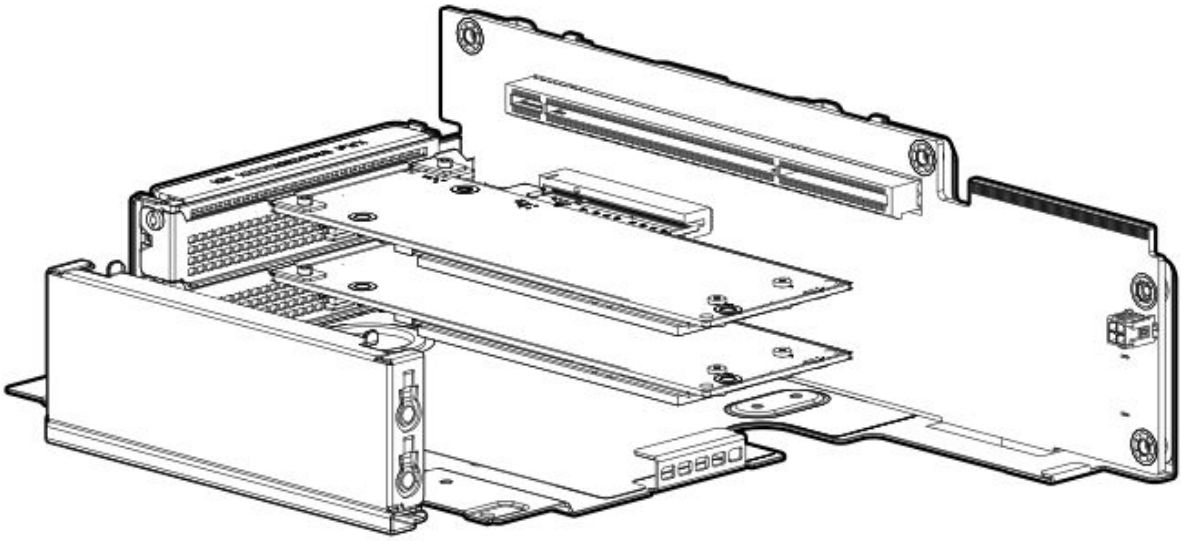

9. Install the PCI cage in the server, and secure it with three T-15 screws.

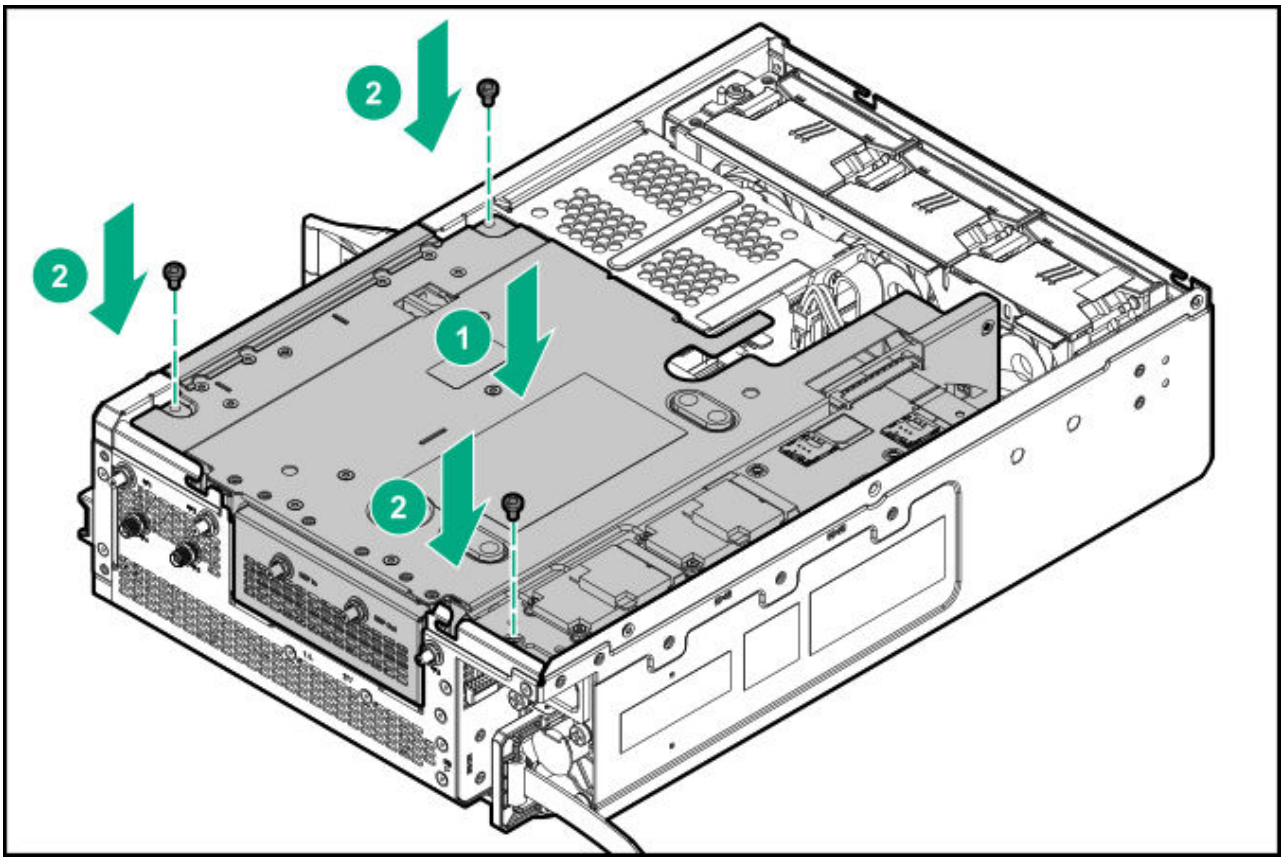

.0. Connect all the necessary cables.

.1. Install the blade.

.2. Install the access panel and secure it with two T-10 screws.

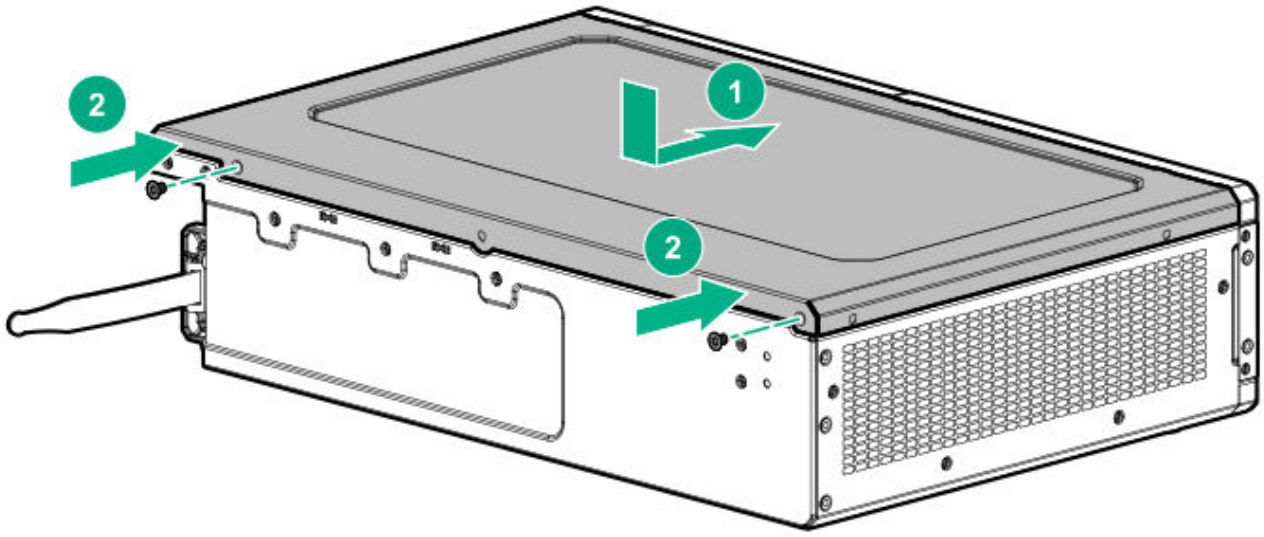

.3. Connect power cord to the system.

.4. Connect power cord to the power source.

.5. Power up the system.

Configuration

Accessing the System Utilities menu

To complete these steps, you need the HPE USB-to-serial cable (HPE part number 871947-B21).

Table 3: Settings for connecting USB cable to serial port

Specifications	Value
Baud rate	115200

Specifications	Value
Data bits	8
Parity	None
Stop bit	1 (8 N1)
Flow control	XON/XOFF

Procedure

1. Power down the blade.
2. Connect the USB-to-serial cable to the system. The USB end is connected to a system USB port.
3. Attach the serial end of the cable to a serial port using a null modem cable. The other serial port may be another USB-to-serial adapter on a different machine.
4. Power on the blade. The serial console output screen displays.

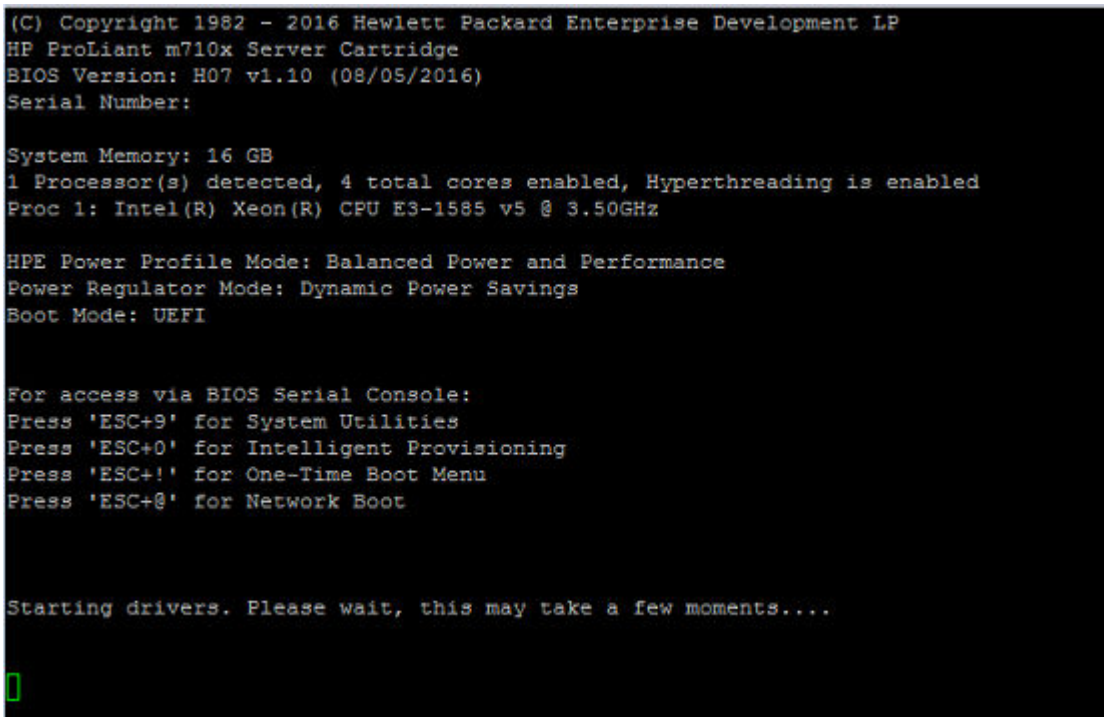

5. Press the **ESC** + **9** keys. The System Utilities menu displays.

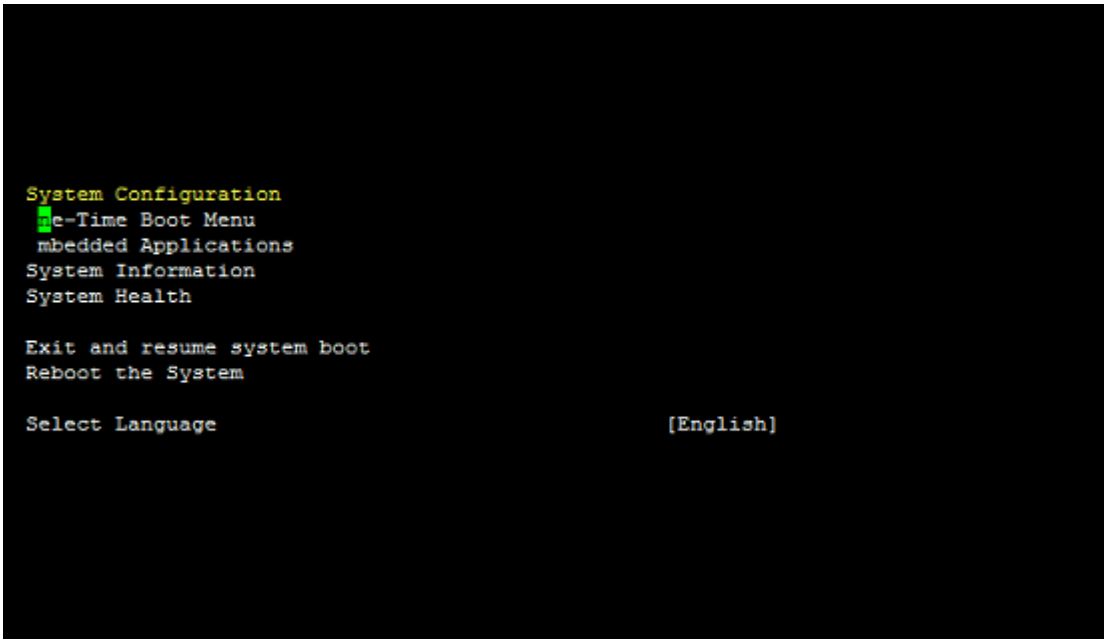

Finding the IP address for an iLO on system blades

System blades contain an iLO processor. However, not all system blades have a local keyboard, video, and mouse solution to help identify the IP address assigned to the iLO. Running a simple DHCP server on your laptop, connected directly to the management (iLO) port on your chassis allows you to temporarily assign an IP address to the management device. The DHCP server enables you to connect to your laptop, obtain the MAC address, and/or configure a static IP before reconnecting the laptop to your proper management network.

System blades have an identification tag that provides the following information:

- The Dynamic DNS name that the iLO will use: If your network supports dynamic DNS, you can access the iLO by entering the dynamic DNS name into your browser.
- The MAC address of the network interface of the iLO: If you have access to the DHCP server lease or log files, you can locate the MAC address of your iLO in the files.

If you do not have access to the leases or log files from your DHCP server, and your network does not support Dynamic DNS, you can use a network scanning application (NMAP) to help identify the IP address.

By default, the iLO attempts to obtain an IP address through DHCP. However, if your network does not support DHCP, or none of the methods described earlier lets you identify the address assigned to your iLO, you can try configuring a static IP address for ongoing management. To configure a static address, you must temporarily provide a DHCP server to access the management interface.

Using dynamic DNS to access the iLO

Prerequisites

Your network supports Dynamic DNS.

Procedure

1. Launch a browser.
2. To attempt to access the management interface, enter the DNS name on your tag into the browser.

   For example, if the name on your tag is 'ilo12345', enter one of the following in the browser:

   - http://ilo12345
   - http://ilo12345.your.domain.name

Using the MAC address to identify the IP address of the iLO

If your network does not support Dynamic DNS, you can identify the IP address by looking for the MAC address of your iLO in your DHCP server lease records, or log files.

Prerequisites

You have access to the lease records or log files from your DHCP server.

Using NMAP to identify the IP address of the iLO

Prerequisites

- You are permitted to scan your network
- You know the MAC address of your network (as mentioned in the identification tag of the blade)

Procedure

1. Open a command prompt.
2. Enter the following NMAP command:

   ```
   nmap -sP -oN logfile.txt <NETWORK ADDRESS>
   ```

The command sweeps the network and returns a list of IP addresses in use, and their associated MAC addresses. For example, if your network address is `192.168.0.1/24`, your command must be:

```
nmap -sP -oN logfile.txt 192.168.0.1/24
```

If the MAC address on your blade identification tag is ' AA:B5:22:F0:EE:A3', then the logfile.txt will be similar to the following output:

```
Host is up (0.00036s latency).
MAC Address: AA:46:A0:65:49:A0 (Hewlett Packard)
Nmap scan report for server1.mis.hpe.net (192.168.0.12)
Host is up (0.00037s latency).
MAC Address: AA:B5:22:F0:EE:A3 (Hewlett Packard)
Nmap scan report for server-1-ilo.mis.hpe.net (192.168.0.13)
Host is up (0.00038s latency).
```

You can identify the IP address of your iLO by matching the MAC address from the identification tag of the blade to the list generated. In the example provided, the MAC address matches the iLO MAC. So the IP address is `192.168.0.13`.

To learn more about HPE iLO 4 or HPE iLO 5 go to the **Hewlett Packard Enterprise Information Library**.

Configuring the DHCP server for Windows on your laptop

The DHCP Server for Windows application does not have to be installed in the system. It can be downloaded and run.

Prerequisites

- Your laptop must be directly connected to the management port of the chassis.
- Your laptop must be disconnected from the network. If you want to run the DHCP service while connected to a network, ensure that you have permission from the network administrator first. Running a DHCP service on a network is a complicated process, and must not be done without experience, and discussion with your technical staff.

Procedure

1. Launch a browser.
2. Go to the DHCP website (**http://www.dhcpserver.de/cms/download/**).
3. Click the link to download the installation file.

4. Locate, and unzip the downloaded file.

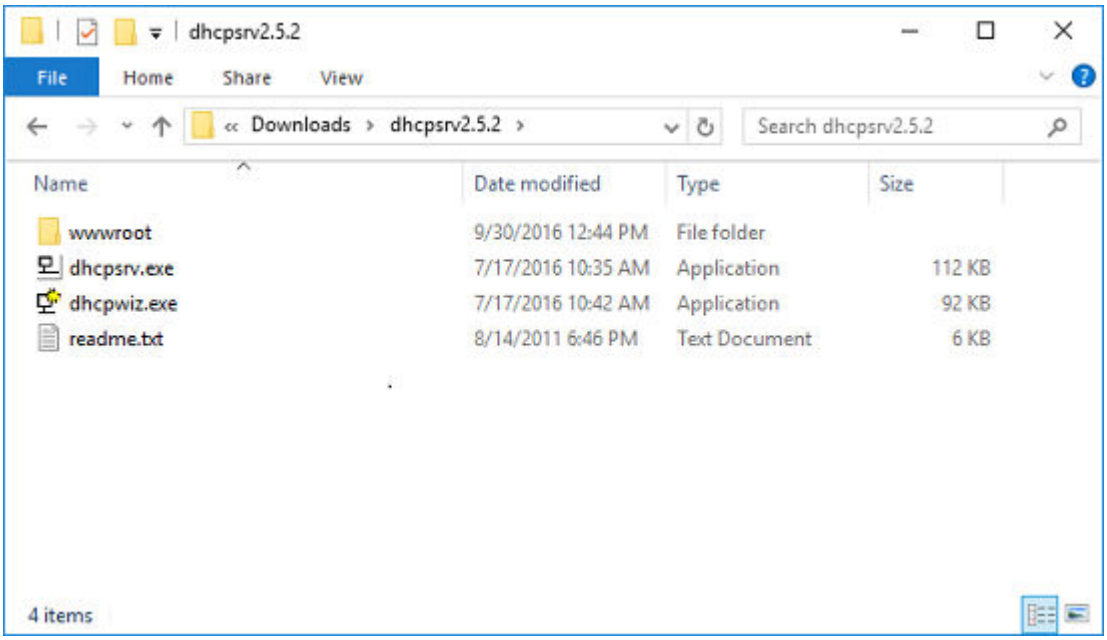

5. Disconnect your laptop from the network.
6. Connect the laptop directly to your gateway chassis.
7. To set up the DHCP server, click the **dhcpwiz.exe** file.
8. Click the **Next** button.

   The Network Interface cards window appears.
9. Select your network interface, and then click the **Next** button.

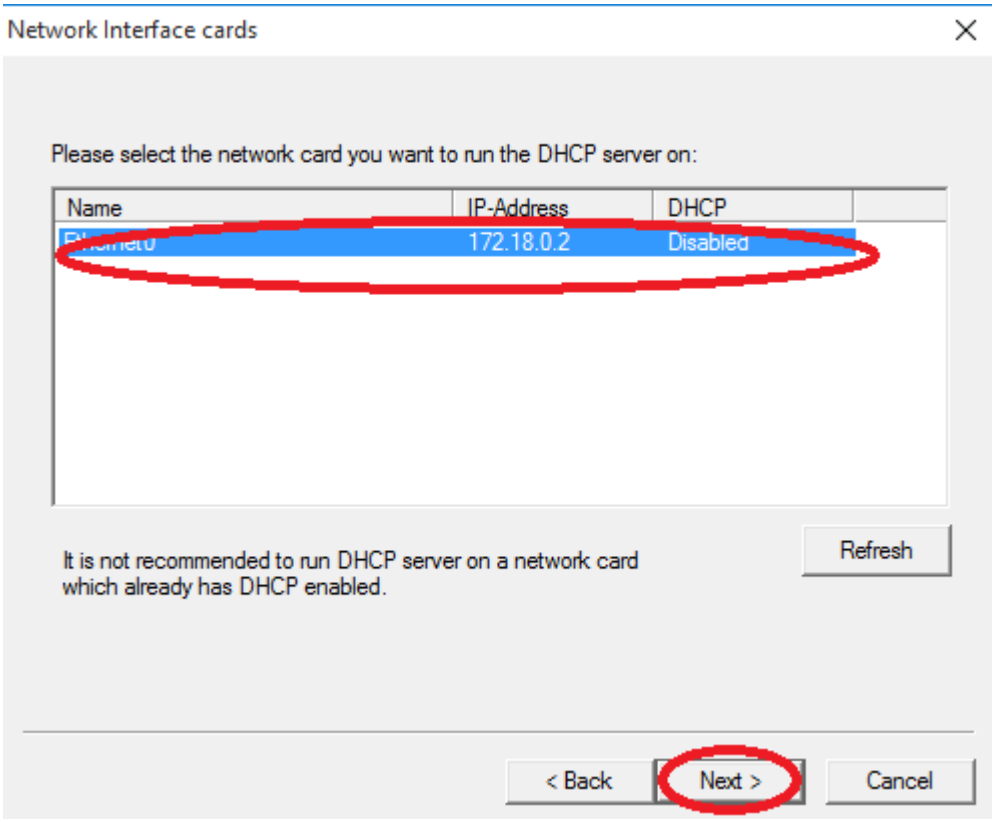

The Supported Protocols window appears.

.0. Select the **HTTP** box, and optionally, the **DNS** box, and then click the **Next** button.

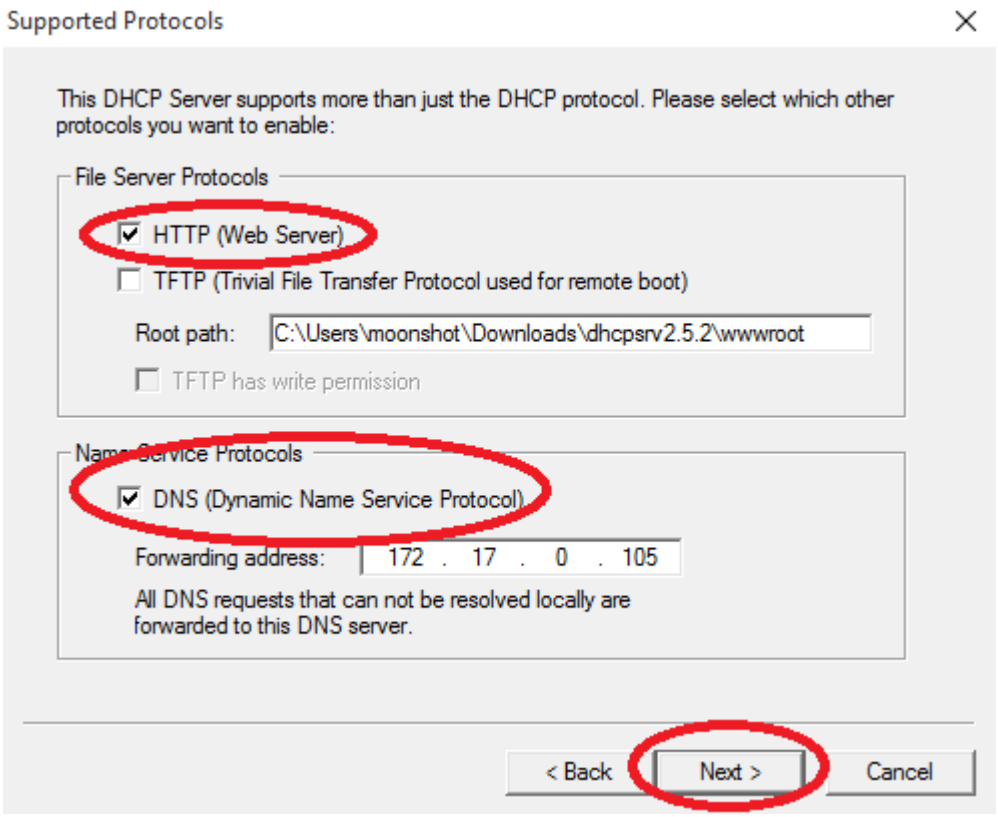

The Configuring DHCP for Interface window appears.

.1. Enter the range of IP addresses that your DHCP server can use to assign to DHCP clients, and then click the **Next** button.

Since you are using this service for only temporarily assigning an IP address to your iLO, this pool has to be just one or two available IP addresses.

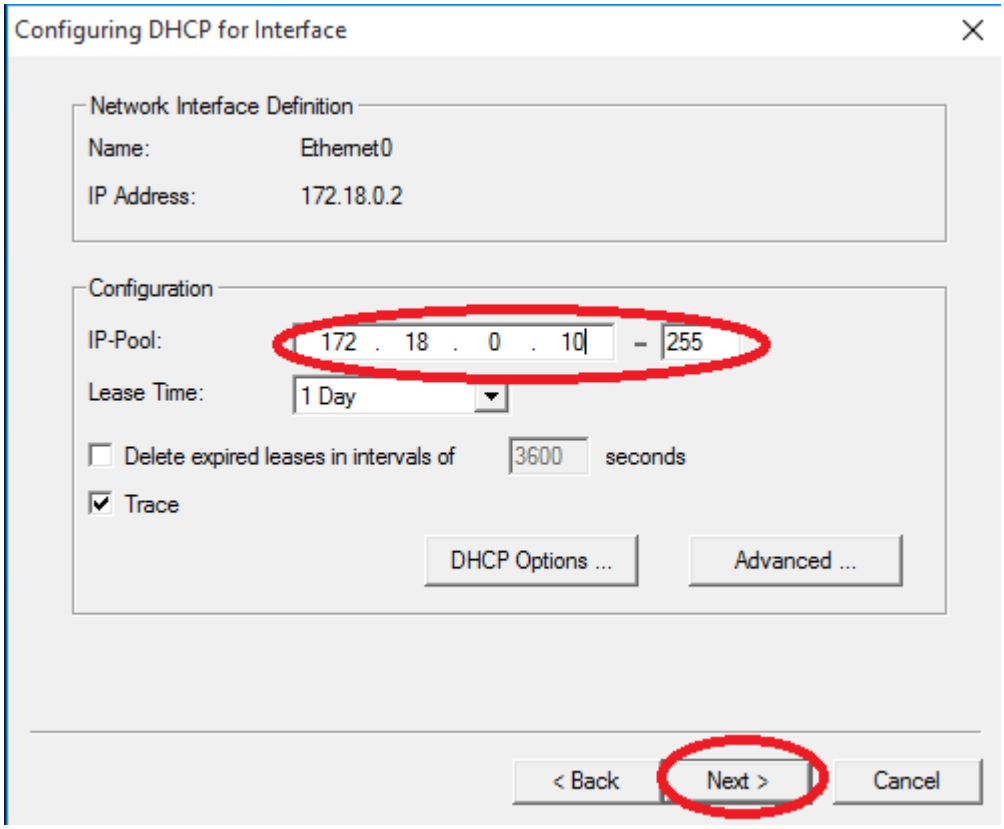

The Writing the INI file window appears.

.2. Click the **Write INI file** button, and then click the **Next** button.

Clicking the Write INI file button saves the configuration file, and enables you to start the service.

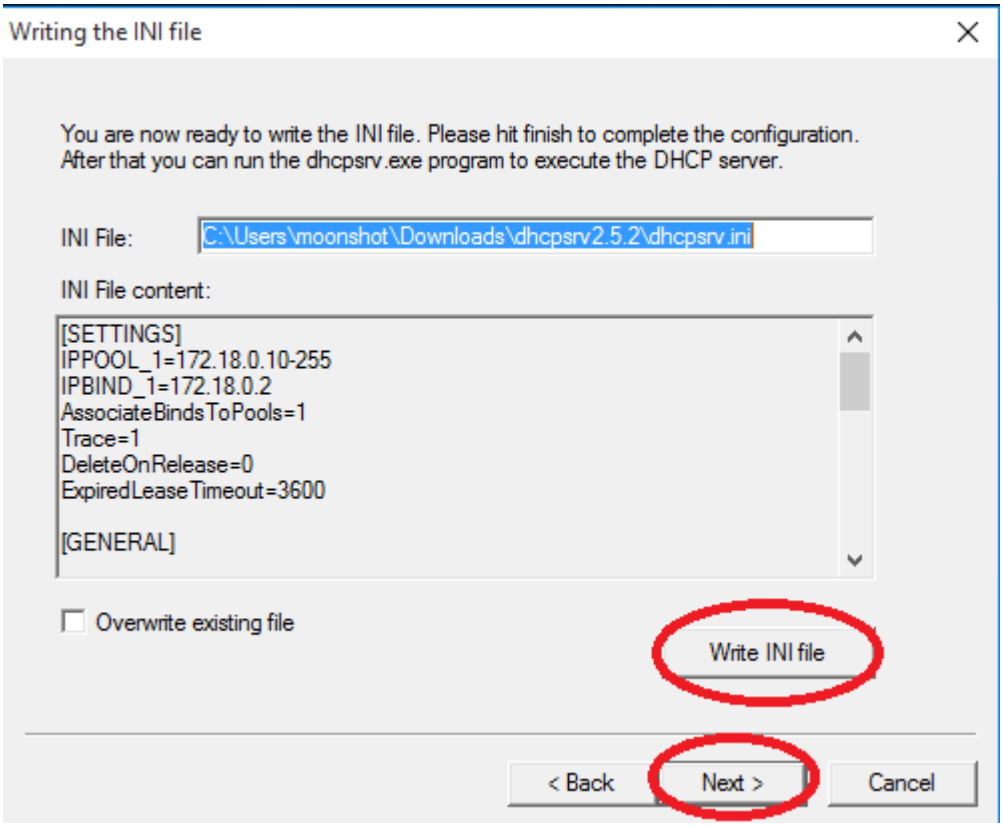

The DHCP server window appears.

.3. Click the **Admin** button.

A confirmation window appears.

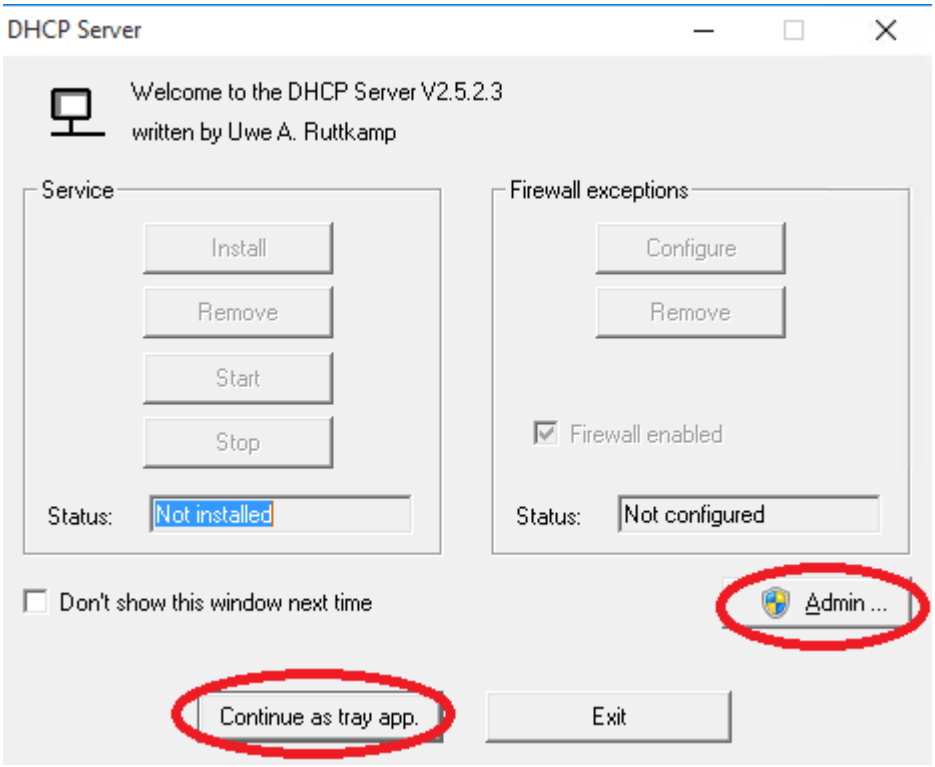

.4. Click **Yes** at the conformation window.

.5. Click the **Continue as tray app** button in the same window.

The DHCP server icon appears on the system tray.

.6. Right-click the DHCP server icon on the system tray.



.7. To open the web interface of your DHCP server, select **Open Status** from the menu.

The DHCP Server Status webpage appears displaying the IP address of any device (your iLO) that has been assigned an IP address from your server.

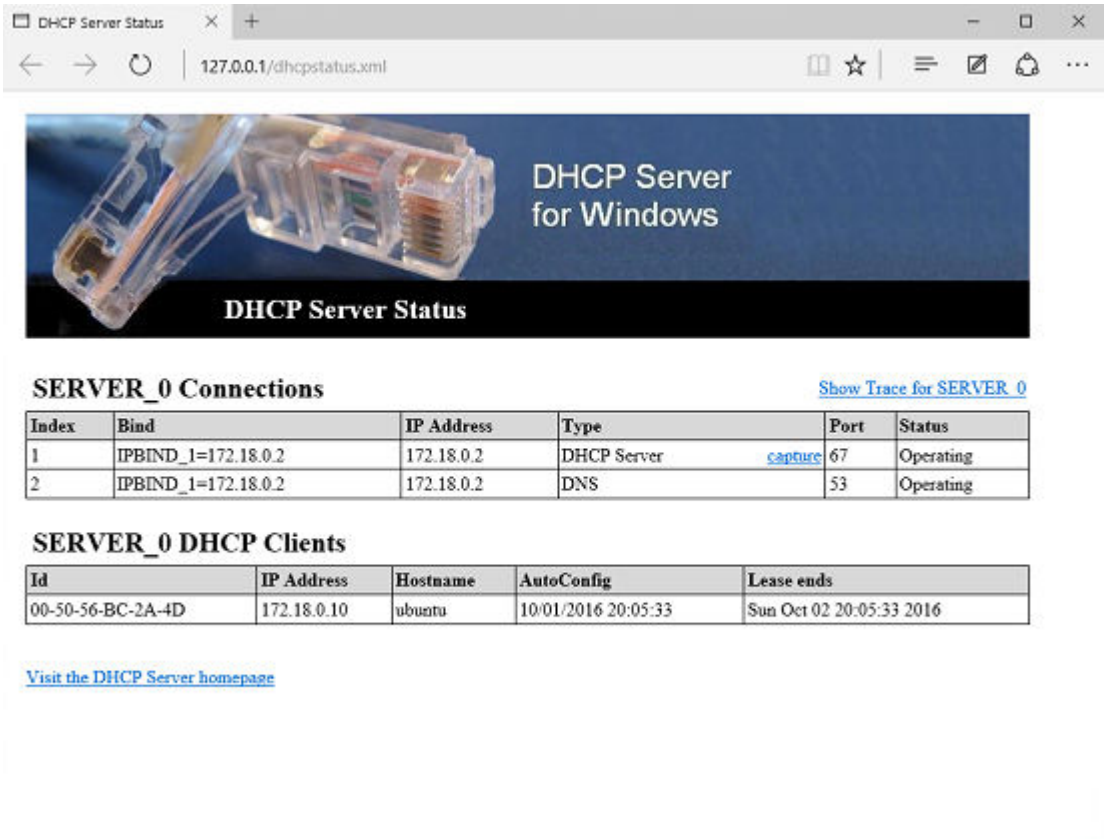

You can configure the iLO static IP address now. For more information, see "Setting the static IP address using the serial console cable."

After the IP address assignment is complete, you can right-click the tray icon, and click **Exit** from the menu to stop the DHCP service.

Setting the static IP address using the serial console cable

Procedure

1. Using iLO 4 configuration utility
2. Using iLO 5 configuration utility

Using iLO 4 configuration utility

Procedure

1. Access the System Utilities menu.
2. Navigate through the menu options **System Configuration** > **iLO 4 Configuration Utility** > **Network Options**. The Network Options screen displays.
3. Change **DHCP Enable** to `OFF`.
4. Configure the **IP Address**, **Subnet Mask**, and **Gateway Address** as required. The following image is an example of a completed **Network Options** screen.

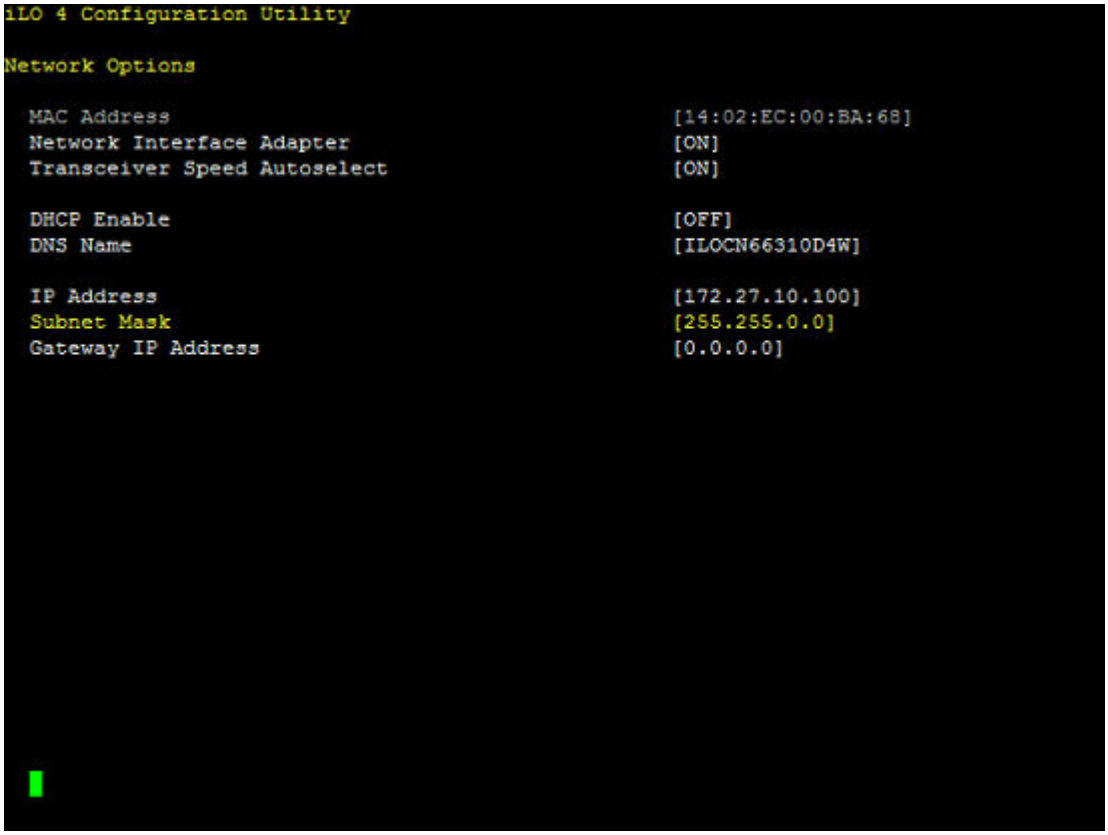

5. Once completed, press **ESC** to back out of the menus. Save the settings when prompted.
6. After saving all settings, iLO prompts for a reset in order for the new settings to be used. Reset the system.

Using iLO 5 configuration utility

This step is required only if you want to use a static IP address. When you use dynamic IP addressing, the DHCP serverautomatically assigns an IP address for iLO.

To simplify installation, Hewlett Packard Enterprise recommends using DNS or DHCP with iLO.

Procedure

1. (Optional) If you access the server remotely, start an iLO remote console session.
2. Restart or power on the server.
3. Press **F9** in the server POST screen.

   The UEFI System Utilities start.
4. Click **System Configuration**.
5. Click **iLO 5 Configuration Utility**.
6. Disable DHCP:

   a. Click **Network Options**.

   b. Select **OFF** in the **DHCP Enable** menu.

      The **IP Address**, **Subnet Mask**, and **Gateway IP Address** boxes become editable. When **DHCP Enable** is set to **ON**, you cannot edit these values.
7. Enter values in the **IP Address**, **Subnet Mask**, and **Gateway IP Address** boxes.
8. To save the changes and exit, press **F12**.

   The iLO 5 Configuration Utility prompts you to confirm that you want to save the pending configuration changes.
9. To save and exit, click **Yes - Save Changes**.

   The iLO 5 Configuration Utility notifies you that iLO must be reset in order for the changes to take effect.
10. Click **OK**.

    iLO resets, and the iLO session is automatically ended. You can reconnect in approximately 30 seconds.
11. Resume the normal boot process:

    a. Start the iLO remote console.

       The iLO 5 Configuration Utility is still open from the previous session.

    b. Press **ESC** several times to navigate to the **System Configuration** page.

    c. To exit the System Utilities and resume the normal boot process, click **Exit and resume system boot**.

Viewing or updating the DHCP address using the serial console cable

Procedure

1. Access the System Utilities menu.
2. For iLO 4, navigate through the menu options **System Configuration** > **iLO 4 Configuration Utility** > **Network** > **DNS/DHCP**, and press **Enter**. The **Network Autoconfiguration** screen displays.

   For iLO 5, navigate through the menu options **System Configuration** > **iLO 5 Configuration Utility** > **Network** > **DNS/DHCP**, and press **Enter**. The **Network Autoconfiguration** screen displays.
3. View or update the DHCP settings.
4. To save any changes, press the **F10** key.
5. After saving all settings, iLO prompts for a reset in order for any new settings to be used. Reset the system.

Finding the IP address through DHCP

Procedure

1. Access the System Utilities menu.
2. For iLO 4, navigate through the menu options **System Configuration** > **iLO 4 Configuration Utility** > **Network Options**.

   For iLO 5, navigate through the menu options **System Configuration** > **iLO 5 Configuration Utility** > **Network Options**.
3. The Network Options screen displays the IP address.

Software and configuration utilities

Product QuickSpecs

For more information about product features, specifications, options, configurations, and compatibility, see the product QuickSpecs on the **Hewlett Packard Enterprise website**.

Supported operating systems and drivers matrix

Operating system support

For more information on Hewlett Packard Enterprise Certified and Supported systems for the operating systems available for your system, see the Hewlett Packard Enterprise OS support website:

http://www.hpe.com/info/ossupport

ROM, BIOS, and driver support

For more information on Hewlett Packard Enterprise Certified and Supported systems for the latest software ROM, BIOS, and drivers available for your system, see the Hewlett Packard Enterprise Support Center website:

http://www.hpe.com/support/hpesc

HPE iLO

iLO is a remote server management processor embedded on the system boards of HPE ProLiant and Synergy servers. iLO enables the monitoring and controlling of servers from remote locations. HPE iLO management is a powerful tool that provides multiple ways to configure, update, monitor, and repair servers remotely. iLO (Standard) comes preconfigured on HPE servers **without an additional cost or license**.

Features that enhance server administrator productivity are licensed. For more information, see the iLO documentation on the **Hewlett Packard Enterprise website**.

Active Health System

The HPE Active Health System provides the following features:

- Combined diagnostics tools/scanners
- Always on, continuous monitoring for increased stability and shorter downtimes
- Rich configuration history
- Health and service alerts
- Easy export and upload to Service and Support

The Active Health System monitors and records changes in the server hardware and system configuration. The Active Health System assists in diagnosing problems and delivering rapid resolution if server failures occur.

The Active Health System collects the following types of data:

- Server model
- Serial number
- Processor model and speed
- Storage capacity and speed
- Memory capacity and speed
- Firmware/BIOS

Active Health System does not collect information about Active Health System users' operations, finances, customers, employees, partners, or data center, such as IP addresses, host names, user names, and passwords. Active Health System does not parse or change operating system data from third-party error event log activities, such as content created or passed through by the operating system.

The data that is collected is managed according to the Hewlett Packard Enterprise Data Privacy policy. For more information, see the **Hewlett Packard Enterprise website**.

The Active Health System, in conjunction with the system monitoring provided by Agentless Management or SNMP Pass-thru, provides continuous monitoring of hardware and configuration changes, system status, and service alerts for various server components.

The Agentless Management Service is available in the SPP, which can be downloaded from the **Hewlett Packard Enterprise website**. The Active Health System log can be downloaded manually from iLO 4 or HPE Intelligent Provisioning and sent to Hewlett Packard Enterprise.

For more information, see the following documents:

- iLO User Guide on the **Hewlett Packard Enterprise website**

- Intelligent Provisioning User Guide on the **Hewlett Packard Enterprise website**

Active Health System data collection

The Active Health System does not collect information about your operations, finances, customers, employees, or partners.

Examples of data that is collected:

- Server model and serial number
- Processor model and speed
- Storage capacity and speed
- Memory capacity and speed
- Firmware/BIOS and driver versions and settings

The Active Health System does not parse or change operating system data from third-party error event log activities (for example, content created or passed through the operating system).

Active Health System log

The data collected by the Active Health System is stored in the Active Health System Log. The data is logged securely, isolated from the operating system, and separate from customer data.

When the Active Health System Log is full, new data overwrites the oldest data in the log.

It takes less than 5 minutes to download the Active Health System Log and send it to a Hewlett Packard Enterprise support professional to help you resolve an issue.

When you download and send Active Health System data to Hewlett Packard Enterprise, you agree to have Hewlett Packard Enterprise use the data for analysis, technical resolution, and quality improvements. The data that is collected is managed according to the privacy statement, available on the **Hewlett Packard Enterprise website**.

iLO 4 or iLO 5 RESTful API support

HPE iLO 4 firmware version 2.00 or HPE iLO 5 firmware version 2.10 and later includes the iLO RESTful API.

The iLO RESTful API is a management interface that server management tools can use to perform configuration, inventory, and monitoring of the HPE ProLiant server via iLO. The iLO RESTful API uses basic HTTPS operations (GET, PUT, POST, DELETE, and PATCH) to submit or return JSON-formatted data with iLO web server.

HPE iLO 4 2.30/HPE iLO 5 2.10 and later is Redfish 1.0-conformant while remaining backward compatible with the existing iLO RESTful API.

HPE iLO 4 or HPE iLO 5 supports the iLO RESTful API with HPE ProLiant Gen8 and later servers. For more information about the iLO RESTful API, see the HPE iLO 4 or HPE iLO 5 APIs on GitHub (**https://hewlettpackard.github.io/ilo-rest-api-docs/**).

Integrated Management Log

The IML records hundreds of events and stores them in an easy-to-view form. The IML time stamps each event with one-minute granularity.

You can view recorded events in the IML in several ways, including the following:

- From within HPE SIM
- From within the UEFI System Utilities
- From within the Embedded UEFI Shell
- From within operating system-specific IML viewers:
  - For Windows: IML Viewer
  - For Linux: IML Viewer Application
- From within the iLO web interface
- From within Insight Diagnostics
- From within InfoSight for Servers for Gen10 server blades

Temperature information

The **Temperature Information** page displays the location, status, temperature, and threshold settings of temperature sensors in the server chassis.

In configurations with HPE Edgeline EL1000 and HPE Edgeline EL4000 Systems with HPE ProLiant m750 Server Blades, the Edgeline chassis thermal sensors and M750 server blade sensors are included in the list.

If the server is powered off, the system health information on this page is current as of the last power off. Health information is updated only when the server is powered on and POST is complete.

Thermal configuration settings

Optimal Cooling

Provides the most efficient solution by configuring fan speeds to the minimum required to provide adequate cooling.

Enhanced CPU Cooling

Provides additional cooling to the processors, which can improve performance.

Increased Cooling

Operates fans at a higher speed.

Maximum Cooling

Provides the maximum cooling available for the system.

Acoustic Mode

Sets a maximum fan speed for the purpose of lowering fan noise. Using this configuration might result in processor throttling in some workloads. This setting is not suitable for systems with GPUs.

This setting is supported on HPE Edgeline EL1000 systems with HPE ProLiant m750 Server Blades.

The thermal configuration setting overrides the minimum fan speed setting if the thermal configuration value is greater than the minimum fan speed value.

Intelligent PDU details

The **Intelligent Power Distribution Units** section is displayed only if the chassis power supplies are connected to an iPDU.

After iLO is reset, or when an iPDU is attached, it takes approximately 2 minutes for the iLO web interface to display the **Intelligent Power Distribution Units** table. This delay is due to the iPDU discovery process.

The following information is displayed in the table:

- **ID**—The power supply bay number.
- **Part Number**—The iPDU part number.
- **Serial Number**—The iPDU serial number.
- **IP Address**—The iPDU IP address.
- **SSL Port**—The iPDU SSL port.
- **MAC Address**—The MAC address of the iPDU network port. This value helps you to identify each connected iPDU because each iPDU has a unique MAC address.

Smart Storage Energy Pack list

The **Power Information** page displays the following information on servers that support the Smart Storage Energy Pack.

Index

The energy pack index number.

Present

The energy pack installation status. The possible values are **OK** and **Not Installed**.

Status

The energy pack health status. The possible values are **OK**, **Degraded**, **Failed**, or **Other**.

Model

The model number.

Spare

The part number of the spare energy pack.

Serial Number

The energy pack serial number.

Type

The energy pack type.

Firmware

The installed energy pack firmware version.

Using iLO 5 for viewing chassis information

The information displayed on the **Chassis Information** page depends on the chassis model and configuration. Information that is not supported is not displayed.

Procedure

1. Click **Chassis Information** in the navigation tree.
2. (Optional) Click a power supply listing to view additional details.

Chassis information

The following details are displayed for all chassis types:

- **Chassis Name**—The name of the chassis that contains the server node.
- **Chassis Serial Number**—The serial number of the chassis that contains the server node.
- **Chassis Part Number**—The part number of the chassis that contains the server node.

Edgeline systems

The following details are displayed for HPE Edgeline EL1000 and HPE Edgeline EL4000 Systems with HPE ProLiant m750 Server Blades:

- **Chassis Slot ID**—The server slot in the chassis.
- **Chassis CPLD Version**—The version of the chassis CPLD firmware.
- **Chassis Controller Firmware Version**—The version of the chassis controller firmware.
- **Chassis Controller Abstract Revision**—The chassis abstraction data version.

Chassis Time

The **Chassis Time** section displays the configured chassis date and time in ISO8601 format.

Configuring the chassis time

Procedure

1. Click **Chassis Information** in the navigation tree.
2. Click in the **Chassis Time** section.

   The **Chassis Date/Time** page opens.
3. Enter the **Chassis Time**, and then click **OK**.

   The Chassis Time must be written in the ISO8601 format.

HPE Edgeline Component Pack

The HPE Edgeline Component Pack is a comprehensive firmware solution tested on the Edgeline System and delivered as a compressed file. The compressed file includes all the component files needed to update an Edgeline System. Users deploy the firmware updates contained in the HPE Edgeline Component Pack using the firmware update capability of the iLO 4 or iLO 5 on each server blade, or by using HPE Edgeline Infrastructure Manager. Download the latest pack from the **Hewlett Packard Enterprise website**.

Firmware information

The following supported firmware types are displayed for HPE Edgeline EL1000 with HPE ProLiant m750 Server Blades:

- Chassis Abstraction Data

- Chassis Controller Firmware
- Chassis CPLD

HPE Edgeline Infrastructure Manager

The Edgeline Infrastructure Manager (EIM) supports discovery, monitoring, and management of Edgeline Converged Edge Systems.

It is delivered as a Virtual Machine image (OVA) targeted at running on VMware ESXi, Workstation, or Player. There are two user interfaces: a local console running a dedicated web browser connected to the appliance UI; and the user's own web browser connected to the web server running on the appliance.

For more information about Edgeline Infrastructure Manager, see the user guide at the following website: **www.hpe.com/info/edgeline-docs**.

UEFI System Utilities

The UEFI System Utilities is embedded in the system ROM. The UEFI System Utilities enable you to perform a wide range of configuration activities, including:

- Configuring system devices and installed options
- Enabling and disabling system features
- Displaying system information
- Selecting the primary boot controller
- Configuring memory options
- Selecting a language
- Launching other preboot environments such as the Embedded UEFI Shell and Intelligent Provisioning

For more information, see the UEFI System Utilities user guide for your product on the **Hewlett Packard Enterprise website**.

To access mobile-ready online help for the UEFI System Utilities and UEFI Shell, scan the QR code at the bottom of the screen. For on-screen help, press the **F1** key.

Using UEFI System Utilities

To use the System Utilities, use the following keys.

Action	Key
Access System Utilities	F9 during server POST
Navigate menus	Up and Down arrows
Select items	Enter
Save selections	F10
Access Help for a highlighted configuration option [1]	F1

[1] Scan the QR code on the screen to access online help for the UEFI System Utilities and UEFI Shell.

Default configuration settings are applied to the server at one of the following times:

- Upon the first system power-up
- After defaults have been restored

Default configuration settings are sufficient for typical server operations; however, you can modify configuration settings as needed. The system prompts you for access to the UEFI System Utilities each time the system is powered up.

Flexible boot control

This feature enables you to do the following:

- Add Boot Options:
  - Browse all FAT16 and FAT32 file systems.
  - To add a new UEFI boot option, select an X64 UEFI application with an .EFI extension. For example, adding an OS boot loader or other UEFI application as a new UEFI boot option.
    The new boot option is appended to the boot-order list. When you select a file, you are prompted to enter the boot option description. This description, and any optional data to be passed to an .EFI application, is then displayed in the boot menu.

- Boot to System Utilities
  After pre-POST, the boot options screen appears. During this time, you can access the UEFI System Utilities by pressing the **F9** key.
- Choose between supported modes:
  - Legacy BIOS Boot Mode
  - UEFI Boot Mode

> **IMPORTANT:** If the default boot mode settings are different than the user-defined settings, the system might not boot the OS installation if the defaults are restored. To avoid this issue, use the User Defined Defaults feature in UEFI System Utilities to override the factory default settings.

For more information, see the UEFI System Utilities user guide for your product on the **Hewlett Packard Enterprise Information Library**.

Restoring and customizing configuration settings

You can reset all configuration settings to the factory default settings, or you can restore and use the system default configuration settings.

You can also configure default settings as necessary, and then save the configuration as the custom default configuration. When the system loads the default settings, it uses the custom default settings instead of the factory defaults.

Secure Boot configuration

Secure Boot is integrated in the UEFI specification on which the Hewlett Packard Enterprise implementation of UEFI is based. Secure Boot is implemented in the BIOS and does not require special hardware. Secure Boot ensures that each component launched during the boot process is digitally signed. Secure Boot also ensures that the signature is validated against a set of trusted certificates embedded in the UEFI BIOS. Secure Boot validates the software identity of the following components in the boot process:

- UEFI drivers loaded from PCIe cards
- UEFI drivers loaded from mass storage devices

- Preboot UEFI shell applications
- OS UEFI boot loaders

When enabled, only firmware components and operating systems with boot loaders that have an appropriate digital signature can execute during the boot process. Only operating systems that support Secure Boot and have an EFI boot loader signed with one of the authorized keys can boot. For more information about supported operating systems, see the UEFI System Utilities and Shell release notes for your system on the **Hewlett Packard Enterprise website**.

A physically present user can customize the certificates embedded in the UEFI BIOS by adding or removing their own certificates.

When Secure Boot is enabled, the System Maintenance Switch does not restore all manufacturing defaults when set to the ON position. For security reasons, the following are not restored to defaults when the System Maintenance Switch is in the ON position:

- Secure Boot is not disabled and remains enabled.
- The Boot Mode remains in UEFI Boot Mode even if the default boot mode is Legacy Boot Mode.
- The Secure Boot Database is not restored to its default state.
- iSCSI Software Initiator configuration settings are not restored to defaults.

Embedded UEFI shell

The system BIOS in all ProLiant Gen9 or Gen10 servers includes an Embedded UEFI Shell in the ROM. The UEFI Shell environment provides an API, a command-line prompt, and a set of CLIs that allow scripting, file manipulation, and system information. These features enhance the capabilities of the UEFI System Utilities.

For more information, see the following documents:

- UEFI Shell User Guide for HPE ProLiant Gen9 Servers on the **Hewlett Packard Enterprise website**
- UEFI Shell User Guide for HPE ProLiant Gen10, ProLiant Gen10 Plus Servers, and HPE Synergy on the **Hewlett Packard Enterprise website**.
- UEFI Shell Specification on the **UEFI website**

Embedded Diagnostics option

The system BIOS in all ProLiant Gen9 or Gen10 servers includes an Embedded Diagnostics option in the ROM. The Embedded Diagnostics option can run comprehensive diagnostics of the server hardware, including processors, memory, drives, and other server components.

For more information on the Embedded Diagnostics option, see the UEFI System Utilities user guide for your system on the **Hewlett Packard Enterprise website**.

iLO RESTful API support for UEFI

The ProLiant Gen9 or Gen10 servers include support for a UEFI-compliant System BIOS, along with UEFI System Utilities and Embedded UEFI Shell preboot environments. ProLiant Gen9 or Gen10 servers also support configuring the UEFI BIOS settings using the iLO RESTful API, a management interface that server management tools can use to perform configuration, inventory, and monitoring of a ProLiant server. The iLO RESTful API uses basic HTTPS operations (GET, PUT, POST, DELETE, and PATCH) to submit or return JSON-formatted data with iLO web server.

For more information about the iLO RESTful API and the RESTful Interface Tool, see **HPE iLO 4 or iLO5 APIs on GitHub** and **RESTful Interface Tool Quick Start Guide**.

Re-entering the server serial number and product ID

After you replace the system board, the system serial number and the product ID must be configured:

Procedure

1. Access System Utilities. During POST, press **F9**.
2. On the System Utilities home screen, select **System Configuration > BIOS/Platform Configuration (RBSU) > Advanced Options > Advanced Service Options**.
3. Select the **Serial Number** field and press **Enter**.

   The following warning appears:

   ```
   The serial number is modified by qualified service personnel and m
   ust match the serial number located on the chassis.
   ```

4. Click **OK**.
5. Type the serial number and press **Enter**.

6. Select the Product ID field and press **Enter**.

   The following warning appears:

   ```
   Product ID is modified only by qualified service personnel. This v
   alue must match the product ID located on the chassis.
   ```

7. Type the product ID and press **Enter**.
8. To confirm exiting from system utilities, press the **F12** key.

   The server automatically reboots.

The procedure is complete.

Troubleshooting

HPE Edgeline Troubleshooting Guide

The HPE Edgeline System Troubleshooting Guide provides procedures for resolving common problems and comprehensive courses of action for fault isolation and identification, issue resolution, and software maintenance on the Edgeline System. The document is available in the **Hewlett Packard Enterprise Information Library**.

Battery

Battery specifications

Feature	Specification
Type	Maintenance-free, sealed, CR2032 lithium manganese dioxide button battery
Voltage	3.0 V

Replace the system battery

Procedure

1. Locate the battery on the system board:
   - PCIe configuration system board
   - PXIe configuration system board
2. Slightly push the metal tab, and then use the small flat-nose pliers to remove the system battery from its socket.

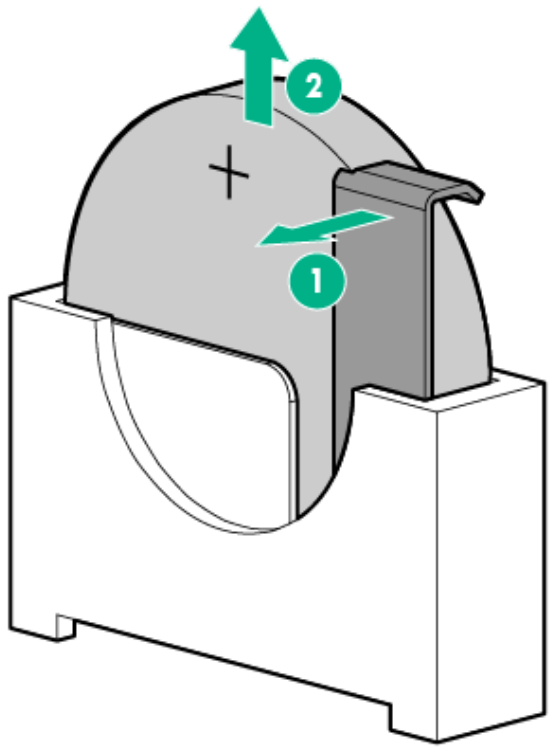

3. Slightly push the metal tab, then install the system battery in the socket.

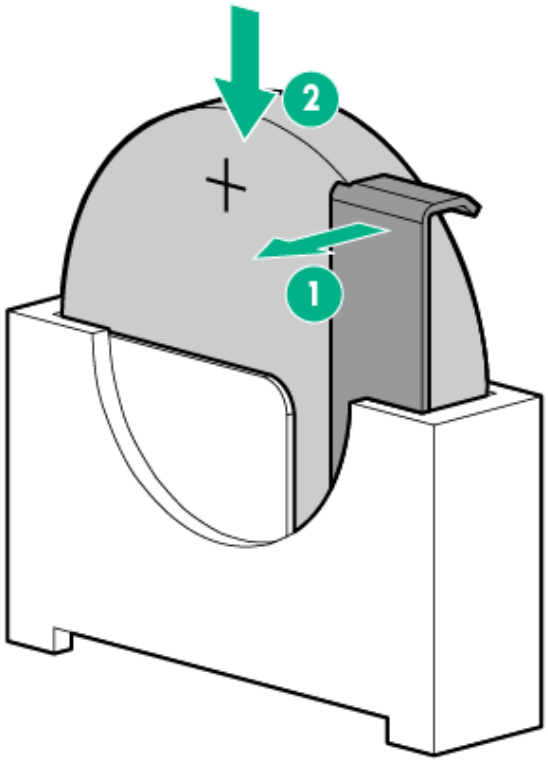

For more information about battery replacement or proper disposal, contact an authorized reseller or an authorized service provider.

Warranty and regulatory information

Warranty information

To view the warranty information for your product, see the links provided below:

HPE ProLiant and IA-32 Servers and Options

https://www.hpe.com/support/ProLiantServers-Warranties

HPE Enterprise and Cloudline Servers

https://www.hpe.com/support/EnterpriseServers-Warranties

HPE Storage Products

https://www.hpe.com/support/Storage-Warranties

HPE Networking Products

https://www.hpe.com/support/Networking-Warranties

Regulatory information

To view the regulatory information for your product, view the Safety and Compliance Information for Server, Storage, Power, Networking, and Rack Products, available at the Hewlett Packard Enterprise Support Center:

https://www.hpe.com/support/Safety-Compliance-EnterpriseProducts

Additional regulatory information

Hewlett Packard Enterprise is committed to providing our customers with information about the chemical substances in our products as needed to comply with legal requirements such as REACH (Regulation EC No 1907/2006 of the European Parliament and the Council). A chemical information report for this product can be found at:

https://www.hpe.com/info/reach

For Hewlett Packard Enterprise product environmental and safety information and compliance data, including RoHS and REACH, see:

https://www.hpe.com/info/ecodata

For Hewlett Packard Enterprise environmental information, including company programs, product recycling, and energy efficiency, see:

https://www.hpe.com/info/environment

Japnese certification mark for WiFi module

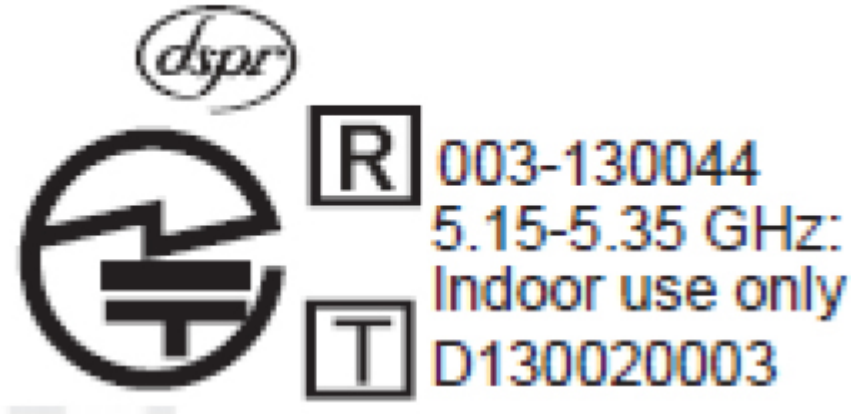

Japanese certification mark for LTE module



Belarus Kazakhstan Russia marking

EAC

Manufacturer and Local Representative Information

Manufacturer information:

- Hewlett Packard Enterprise Company, 3000 Hanover Street, Palo Alto, CA 94304 U.S.

Local representative information Russian:

- Russia:

  ООО «Хьюлетт Паккард Энтерпрайз», Российская Федерация, 125171, г. Москва, Ленинградское шоссе, 16А, стр.3, Телефон/факс: +7 495 797 35 00

- Belarus:

  ИООО «Хьюлетт-Паккард Бел», Республика Беларусь, 220030, г. Минск, ул. Интернациональная, 36-1, Телефон/факс: +375 17 392 28 20

- Kazakhstan:

  ТОО «Хьюлетт-Паккард (К)», Республика Казахстан, 050040, г. Алматы, Бостандыкский район, проспект Аль-Фараби, 77/7, Телефон/факс: + 7 727 355 35 52

Local representative information Kazakh:

- Russia:

  ЖШС "Хьюлетт Паккард Энтерпрайз", Ресей Федерациясы, 125171, Мәскеу, Ленинград тас жолы, 16А блок 3, Телефон/факс: +7 495 797 35 00

- Belarus:

  «HEWLETT-PACKARD Bel» ЖШС, Беларусь Республикасы, 220030, Минск қ., Интернациональная көшесі, 36/1, Телефон/факс: +375 17 392 28 20

- Kazakhstan:

ЖШС «Хьюлетт-Паккард (К)», Қазақстан Республикасы, 050040, Алматы к., Бостандық ауданы, Әл-Фараби даңғ ылы, 77/7, Телефон/факс: +7 727 355 35 52

Manufacturing date:

The manufacturing date is defined by the serial number.

CCSYWWZZZZ (serial number format for this product)

Valid date formats include:

- YWW, where Y indicates the year counting from within each new decade, with 2000 as the starting point; for example, 238: 2 for 2002 and 38 for the week of September 9. In addition, 2010 is indicated by 0, 2011 by 1, 2012 by 2, 2013 by 3, and so forth.
- YYWW, where YY indicates the year, using a base year of 2000; for example, 0238: 02 for 2002 and 38 for the week of September 9.

Turkey RoHS material content declaration

Türkiye Cumhuriyeti: AEEE Yönetmeliğine Uygundur

Ukraine RoHS material content declaration

Обладнання відповідає вимогам Технічного регламенту щодо обмеження використання деяких небезпечних речовин в електричному та електронному обладнанні, затвердженого постановою Кабінету Міністрів України від 3 грудня 2008 № 1057

Federal Communications Commission notice for Class A equipment

This device complies with part 15 of the FCC Rules. Operation is subject to the following conditions:

- This device may not cause harmful interference.
- This device must accept any interference received, including interference that may cause undesired operation.

This equipment has been tested and found to comply with the limits for a Class A digital device, pursuant to part 15 of the FCC Rules. These limits are designed to provide reasonable protection against harmful interference when the equipment is operated in a commercial environment. This equipment generates, uses, and can radiate radio frequency energy and, if not installed and used in accordance with the instruction manual, may cause harmful interference to radio communications. Operation of this equipment in a residential area is likely to cause harmful interference in which case the user will be required to correct the interference at their own expense.

This equipment complies with radio frequency (RF) exposure limits adopted by the Federal Communications Commission for an uncontrolled environment. This equipment should be installed and operated with a minimum distance of 20 cm between the radiator and your body.

Changes or modifications not expressly approved by the party responsible for compliance could void the authority of the user to operate the equipment.

European Union (CE) compliance

Table 4: 7260 module (optional)

Operating frequency band	Maximum radio frequency (RF) power transmitted (dBm, EIRP)
Bluetooth	8
BLE	6.5
WLAN 2.4 GHz	20
WLAN 5 GHz	17

Table 5: MC7430 module (optional)

Operating frequency band	Maximum radio frequency (RF) power transmitted (dBm, conducted)
UMTS band 1	23.5
UMTS band 8	23.5
LTE band 1	23
LTE band 3	23.5
LTE band 7	22
LTE band 8	23.5
LTE band 28	23.5
LTE band 38	21.5
LTE band 39	23
LTE band 40	22
LTE band 41	22

Table 6: MC7455 module (optional)

Operating frequency band	Maximum radio frequency (RF) power transmitted (dBm, conducted)
UMTS band 1	23.5
UMTS band 3	23.5
UMTS band 8	23
LTE band 1	23.5
LTE band 3	23.5
LTE band 7	22
LTE band 8	23.
LTE band 20	23

The device is restricted to indoor use only when operating in the 5150 to 5350 MHz frequency range.

	AT	BE	BG	HR	CY	CZ	DK



EE	FI	FR	DE	EL	HU	IE
IT	LV	LT	LU	MT	NL	PL
PT	RO	SK	SI	ES	SE	UK

WARNING: Risk of explosion if a battery is replaced by an incorrect type. Dispose of used batteries according to the instructions.

RF exposure information (MPE)

This device meets the EU requirements and the International Commission on Non-Ionizing Radiation Protection (ICNIRP) on the limitation of exposure of the general public to electromagnetic fields by way of health protection. This equipment should be installed and operated to ensure a minimum of 20 cm spacing to any person at all times.

Hereby, Hewlett Packard Enterprise declares that the radio equipment type used in the system is in compliance with Directive 2014/53/EU. The full text of the EU declaration of conformity is available at the following internet address:

www.address.com/DoC.pdf

The European Union WEEE Directive Page is available at: **http://h20564.www2.hpe.com/portal/site/hpesc/public/kb/docDisplay/?docId=c03471072**.



Waste Electrical and Electronic Equipment (WEEE)

This symbol means that according to local laws and regulations your product and/or its bat tery shall be disposed of separately from household waste. When this product reaches its en d of life, take it to a collection point designated by local authorities. Proper recycling of your product will protect human health and the environment.

Canada, Industry Canada (IC) Notices

Class A digital circuitry of this device complies with Canadian ICES-003.

This device complies with Industry Canada license-exempt RSS standards. Operation is subject to the following conditions:

1. This device may not cause interference.
2. This device must accept any interference, including interference that may cause undesired operation of the device.

Under Industry Canada regulations, the radio transmitters in this device may only operate using an antenna of a type and maximum (or lesser) gain approved for the transmitter by Industry Canada. To reduce potential radio interference to other users, the antenna type and its gain should be so chosen that the equivalent isotropically radiated power (e.i.r.p.) is not more than what is necessary for successful communication.

WARNING:

1. The device for operation in the band 5,150 MHz to 5,250 MHz is only for indoor use to reduce the potential for harmful interference to cochannel mobile satellite systems.
2. The maximum antenna gain permitted for devices in the bands 5,250 MHz to 5,350 MHz and 5,470 MHz to 5,725 MHz shall comply with the e.i.r.p. limit.
3. The maximum antenna gain permitted for devices in the band 5,725 MHz to 5,825 MHz shall comply with the e.i.r.p. limits specified for point-to-point and non point-to-point operation as appropriate.
4. Users should also be advised that high-power radars are allocated as primary users (that is, priority users) of the bands 5,250 MHz to 5,350 MHz and 5650-5850 MHz and that these radars could cause interference and damage to LE-LAN devices, or both.

Radio Frequency (RF) Exposure Information

This equipment complies with IC RSS-102 radiation exposure limits set forth for an uncontrolled environment. This equipment should be installed and operated with a minimum distance of 20 cm between the radiator and your body.

This device and its antennas must not be colocated or operating in conjunction with any other antenna or transmitter.

This device has been certified for use in Canada. Status of the listing in the Industry Canada REL (Radio Equipment List) can be found at the following website:

http://www.ic.gc.ca/app/sitt/reltel/srch/nwRdSrch.do?lang=eng

Additional Canadian information on RF exposure can also be found at the following website:

http://www.ic.gc.ca/eic/site/smt-gst.nsf/eng/sf08792.html

Canada, avis d'Industry Canada (IC)

La circuiterie numérique de Classe A cet appareil est conforme à la norme canadienne ICES-003.

Cet appareil est conforme aux normes d'exemption de licence RSS d'Industry Canada.

Son fonctionnement est soumis aux deux conditions suivantes:

1. Cet appareil ne doit pas causer d'interférence.
2. Cet appareil doit accepter toute interférence, notamment les interférences qui peuvent affecter son fonctionnement.

Conformément aux réglementations d'Industry Canada, les émetteurs radio de cet appareil ne peuvent fonctionner qu'à l'aide d'une antenne dont le type et le gain maximal (ou minimal) pour ces émetteurs - transmetteurs sont approuvés par Industry Canada. Pour réduire le risque d'interférence éventuelle pour les autres utilisateurs, le type et le gain de l'antenne doivent être choisis de manière à ce que la puissance isotrope rayonnée é quivalente (p.i.r.e.) minimale nécessaire à une bonne communication soit fournie.

WARNING:

1. Les dispositifs fonctionnant dans la bande 5 150 MHz - 5 250 MHz sont réservés uniquement pour une utilisation à l'intérieur afin de réduire les risques de brouillage préjudiciable aux systèmes de satellites mobiles utilisant les mêmes canaux
2. Le gain maximal d'antenne permis pour les dispositifs utilisant les bandes 5 250 MHz - 5 350 MHz et 5 470-5 725 MHz doit se conformer à la limite de p.i.r.e.
3. Le gain maximal d'antenne permis (pour les dispositifs utilisant la bande 5 725 MHz -5 825 MHz) doit se conformer à la limite de p.i.r.e. spécifiée pour l'exploitation point à point et non point à point, selon le cas.
4. Les utilisateurs devraient aussi être avisés que les utilisateurs de radars de haute puissance sont désignés utilisateurs principaux (c.-à-d., qu'ils ont la priorité) pour les bandes 5 250-5 350 MHz et 5 650-5 850 MHz et que ces radars pourraient causer du brouillage et/ou des dommages aux dispositifs LAN-EL.

Informations sur l'exposition à la fréquence radio (FR)

Cet équipement est conforme aux limites d'exposition aux rayonnements IC établies pour un environnement non contrôlé. Cet équipement doit être installé et utilisé avec un minimum de 20 cm de distance entre la source de rayonnement et votre corps.

Cet appareil est homologué pour l'utilisation au Canada. Pour consulter l'entrée correspondant à l'appareil dans la liste d'équipement radio (REL - Radio Equipment List) d'Industry Canada, rendez-vous sur:

http://www.ic.gc.ca/app/sitt/reltel/srch/nwRdSrch.do?lang=eng

Pour des informations canadiennes supplémentaires sur l'exposition FR, rendez-vous sur:

http://www.ic.gc.ca/eic/site/smt-gst.nsf/eng/sf08792.html

Electrostatic discharge

Preventing electrostatic discharge

To prevent damaging the system, be aware of the precautions you must follow when setting up the system or handling parts. A discharge of static electricity from a finger or other conductor may damage system boards or other static-sensitive devices. This type of damage may reduce the life expectancy of the device.

Procedure

- Avoid hand contact by transporting and storing products in static-safe containers.
- Keep electrostatic-sensitive parts in their containers until they arrive at static-free workstations.
- Place parts on a grounded surface before removing them from their containers.
- Avoid touching pins, leads, or circuitry.
- Always be properly grounded when touching a static-sensitive component or assembly.

Grounding methods to prevent electrostatic discharge

Several methods are used for grounding. Use one or more of the following methods when handling or installing electrostatic-sensitive parts:

- Use a wrist strap connected by a ground cord to a grounded workstation or computer chassis. Wrist straps are flexible straps with a minimum of 1 megohm ±10 percent resistance in the ground cords. To provide proper ground, wear the strap snug against the skin.
- Use heel straps, toe straps, or boot straps at standing workstations. Wear the straps on both feet when standing on conductive floors or dissipating floor mats.

- Use conductive field service tools.
- Use a portable field service kit with a folding static-dissipating work mat.

If you do not have any of the suggested equipment for proper grounding, have an authorized reseller install the part.

For more information on static electricity or assistance with product installation, contact the **Hewlett Packard Enterprise Support Center**.

Specifications

Product QuickSpecs

For more information about product features, specifications, options, configurations, and compatibility, see the product QuickSpecs on the Hewlett Packard Enterprise website (**https://www.hpe.com/info/qs**).

Environmental specifications

Table 7: Standard specifications

Specification	Value
Temperature range [1]	—
Operating	10°C to 35°C (50°F to 95°F)
Nonoperating	-30°C to 60°C (-22°F to 140°F)
Relative humidity (noncondensing)	—
Operating	8% to 90% at 28°C (82.4°F) maximum wet bulb temperature
Non-Operating	5% to 95% at 38.7°C (101.7°F) maxim um wet bulb temperature

[1]All temperature ratings shown are for sea level. An altitude derating of 1.0°C per 304.8 m (1.8°F per 1,000 ft) to 3,048 m (10,000 ft) is applicable. No direct sunlight allowed. Maximum rate of change is 20°C per hour (36°F per hour).

Table 8: ASHRAE Class A3 specifications

Specification	Value
Temperature range [1]	—
Operating	5°C to 40°C (41°F to 104°F)
Nonoperating	-30°C to 60°C (-22°F to 140°F)
Relative humidity (noncondensing)	—
Operating	8% to 90% at 28°C (82.4°F) maximum wet bulb temperature
Non-Operating	5% to 95% at 38.7°C (101.7°F) maxim um wet bulb temperature

[1]All temperature ratings shown are for sea level. Good for 40°C operation up to 1,828 m (6,000 ft) with no altitude de-rating. No restriction on product configurations. Abnormal configurations, allowed for up to 96 hours at one time, no more than 15 days maximum per year. Operation above 40°C (104°F) up to 55°C (131°F), no altitude de-rating, 1,828 m (6,000 ft) limit. Some components could be outside the thermal maximum limits. System must be kept running, processor throttling is allowed. Abnormal conditions allow for operation down to -5°C (23°F).

Table 9: ASHRAE Class A4 specifications

Specification	Value
Temperature range [1]	—
Operating	5°C to 45°C (41°F to 113°F) 10°C to 35°C (50°F to 95°F) when GP U is installed [2]
Nonoperating	-30°C to 60°C (-22°F to 140°F)
Relative humidity (noncondensing)	—
Operating	8% to 90% at 28°C (82.4°F) maximum wet bulb temperature

Specification	Value
Non-Operating	5% to 95% at 38.7°C (101.7°F) maximum wet bulb temperature

[1]All temperature ratings shown are for sea level. An altitude derating of 1.0°C per 125 m (1.8°F per 410 ft) to 900 m (2,953 ft) is applicable. No direct sunlight allowed. Maximum rate of change is 20°C per hour (36°F per hour). No restrictions on product configurations except for rotating hard drives. PCI cards must be rated for continuous operation with 60°C cooling air. Not rated for operation over 3,030 m (10,000 ft).
[2]Fan failure might reduce performance

Table 10: Extended Edgeline specifications

Specification	Value
Temperature range [1]	—
Operating	0°C to 55°C (32°F to 131°F)
Nonoperating	-30°C to 60°C (-22°F to 140°F)
Relative humidity (noncondensing)	—
Operating	8% to 90% at 28°C (82.4°F) maximum wet bulb temperature
Non-Operating	5% to 95% at 38.7°C (101.7°F) maximum wet bulb temperature

[1]All temperature ratings shown are for sea level. An altitude derating of 1.0°C per 304.8 m (1.8°F per 1,000 ft) to 3,048 m (10,000 ft) is applicable. No direct sunlight allowed. Maximum rate of change is 20°C per hour (36°F per hour).

Environmental specifications-system components support matrix

Environmental specification	Support status						
	Base system	Fans	SFF drives	SATA M.2 drives	NVME M.2 drives	PCIe I/O cards	PXIe I/O cards
Standard Operating Support	Yes	Yes (with redundancy)	Yes	Yes	Yes	Yes	Yes (up to 38 W)[1]
Extended Ambient 40°C Operating Support (ASHRAE Class A3 Compliant)	Yes	Yes (with redundancy)[2]	Yes	Yes	Yes	Yes	Yes (up to 38 W)[1]
Extended Ambient 45°C Operating Support (ASHRAE Class A4 Compliant)	Yes	Yes (with redundancy)[2]	Yes (less than 8 W)	Yes	Yes[3]	Yes	Yes (up to 38 W)[1]
Extended Edgeline 0 °C to 55°C Operating Support	Yes[4]	Yes (with redundancy)[2]	No	Yes	No	Yes[5]	Yes (up to 38 W)[1]

[1] Maximum altitude is 2,000 m (800 mbar) (at 25 °C ambient temperature)
[2] Upon fan failure, the servers in the system might have reduced performance.
[3] M.2 drive might exceed its spec by 2°C to 3°C and have slight throttling.
[4] Near 55°C inlet ambient temperature, when the CPU is stressed at 100%, the HPE m510 -16c server might have reduced performance.
[5] The PCI card must have inlet spec rated at 65°C or higher, and an air speed of 375 ft/min.

Mechanical specifications

Specification	Value
Length	87.4 mm (3.44 in)
Width	338 mm (13.30 in)
Depth	234 mm (9.20 in)
Weight	7.5 kg (16.53 lb)

Power supply specifications

HPE 500W Flex Slot Platinum Hot Plug Power Supply

Input voltage range (V rms)	100-240							
Frequency range (Nominal) (Hz)	50-60							
Nominal input voltage (V rms)	100	120	127	200	208	220	230	240
Maximum rated output wattage rating (Watts)	500	500	500	500	500	500	500	500
Nominal input current (A rms)	5.6	4.6	4.3	2.7	2.6	2.5	2.4	2.3
Maximum rated input wattage rating (Watts)	558	550	543	539	538	538	537	537
Maximum rated VA (Volt-Amp)	564	556	549	544	544	543	542	542
Efficiency (%)	89.6	90.9	92.1	92.8	92.9	93.0	93.1	93.1
Power factor	0.99	0.99	0.99	0.99	0.99	0.99	0.99	0.99
Leakage current (mA)	0.32	0.38	0.40	0.63	0.65	0.69	0.72	0.75

Maximum inrush current (A peak)	30	30	30	30	30	30	30	30
Maximum inrush current d uration (ms)	10	10	10	10	10	10	10	10
Maximum British Thermal Unit rating (BTU-Hr)	1904	1877	1853	1839	1837	1834	1832	1832

HPE 800W Flex -48VDC Hot Plug Power Supply

Input voltage range (V DC)	-40 to -72		
Frequency range (Nominal) (Hz)	DC		
Nominal input voltage (V DC)	-40	-48	-72
Maximum rated output wattage rating (Watts)	800	800	800
Nominal input current (A DC)	22.0	18.1	11.9
Maximum rated input wattage rating (Watts)	882	871	858
Maximum rated VA (Volt-Amp)	882	871	858
Efficiency (%)	90.7	91.9	93.2
Power factor	1.0	1.0	1.0
Leakage current (mA)	0.0	0.0	0.0
Maximum inrush current (A peak)	30	30	30
Maximum inrush current d uration (ms)	10	10	10
Maximum British Thermal Unit rating (BTU-Hr)	3008	2971	2929

PXI/PXIe specifications

NOTE: Specifications are subject to change without notice.

Electrical load regulation specifications

Voltage (V)	Load regulation (%)
+3.3	<5
+12	<5
+5	<5
-12	<5

Chassis cooling specifications

Specification	Value
Module cooling system	Forced air circulation (positive pressurization) through three fans with High /Auto speed selector.
Airflow	From front to rear

Pollution specifications

Specifications	Value
Pollution degree	2

For indoor use only in a climate-controlled environment.

Shock and vibration specifications

Specification	Value
Operational shock	30 g peak, half-sine, 11 ms pulse
Random vibration	5 Hz to 500 Hz, 0.3 g rms

Acoustic emission specifications

Acoustic noise

Acoustic noise specifications for the following base configurations are available.

Table 11: Base configuration 1 (m510)

Component	Quantity	Specification
Blade	1	m510
DIMMs/cartridge	4	Any
SATA M.2/cartridge	1	64 GB
NVME M.2/cartridge	0	NA
PXI	4	PXI 6341
PSU	2	800 W AC

Table 12: Base configuration 2 (m710x and m710x-L)

Component	Quantity	Specification
Blade	1	m710x and m710x-L
DIMMs/cartridge	4	Any
SATA M.2/cartridge	1	64 GB
NVME M.2/cartridge	0	NA
PXI	4	PXI 6341
PSU	2	800 W AC

Table 13: Base configuration 3 (m750)

Component	Quantity	Specification
Blade	1	m750
DIMMs/cartridge	4	Any
SATA M.2/cartridge	1	64 GB
NVME M.2/cartridge	0	NA
PXI	4	PXI 6341
PSU	2	800 W AC

The LWAd and LpAm when the system is operating in a 23°C ambient environment are provided in the following tables. Noise emissions were measured in accordance with ISO 7779 (ECMA 74) and declared in accordance with ISO 9296 (ECMA 109).

Table 14: Acoustic noise when system is idle

system configuration	LWAd (B)	LpAm (dBA)
Base 1	8	64.6
Base 2	8	64.6
Base 3	8	30.6

Table 15: Acoustic noise when system is operating

system configuration	LWAd (B)	LpAm (dBA)
Base 1	8	64.6
Base 2	8	64.6
Base 3	8	48.7

NOTE:

If used in a manner not described in this document, the protection provided by the system can be impaired.

HPE EMC compliance testing

Emissions classification	FCC rating	Class A
EMC	Normative standards	• CISPR 22 • EN55022 • EN55024 • FCC CFR 47 • Pt 15 • ICES-003 • CNS13438 • K22 • K24 • EN 61000-3-2 • EN 61000-3-3

Emissions classification	FCC rating	Class A
		• EN 60950-1 • IEC 60950-1

NOTE:

Product conformance to cited product specifications is based on sample (type) testing, evaluation, or assessment. This product or family of products is eligible to bear the appropriate compliance logos and statements.

System synchronization clock specifications

10 MHz system reference clock: PXI_CLK10

Specification	Value
Maximum slot-to-slot skew	1 ns
Accuracy	±25 ppm max (guaranteed over the o perating temperature range)
Maximum jitter	5 ps RMS phase jitter (10 Hz to 1 MHz range)
Duty factor	45% to 55%
Unloaded signal swing	3.3 V ±0.3 V

NOTE:

For other specifications, see 'PXI-1 Hardware Specification' at the PXI Systems Alliance website (**http://www.pxisa.org/userfiles/files/Specifications/PXIHWSPEC22.pdf**).

100 MHz system reference clock: PXIe_CLK100 and PXIe_SYNC100

Specification	Value
Maximum slot-to-slot skew	200 ps
Accuracy	±25 ppm max (guaranteed over the o perating temperature range)
Maximum jitter	5 ps RMS phase jitter (10 Hz to 12 kH z range); 5 ps RMS phase jitter (12 kH z to 20 MHz range)
Duty factor for PXIe_CLK100	45% to 55%
Absolute single-ended voltage swing (when each line in the differential pair has 50 W termination to 1.30 V or Th évenin equivalent)	400 mV to 1,000 mV

NOTE:

For other specifications, see 'PXI-5 PXI Express Hardware Specification' at the PXI Systems Alliance website (**http://www.pxisa.org/userfiles/files/Specifications/PXIEXPRESS_HW_SPEC_R1.PDF**).

External 10 MHz reference out (SMA on front panel of chassis)

Specification	Value
Accuracy	±25 ppm max (guaranteed over the o perating temperature range)
Maximum jitter	5 ps RMS phase jitter (10 Hz to 1 MHz range)
Output amplitude	1 VPP ±20% square wave into 50 Ω 2 VPP unloaded
Output impedance	50 Ω ±5 Ω

External clock source

Specification	Value
Frequency	10 MHz ±100 PPM
Input amplitude	—
Front panel BNC	200 mVPP to 5 VPP square-wave or sine-wave
Front panel SMA input impedance	50 Ω ± 5 Ω

Support and other resources

Websites

- **Hewlett Packard Enterprise Information Library**
- **Hewlett Packard Enterprise Support Center**
- **Contact Hewlett Packard Enterprise Worldwide**
- **Subscription Service/Support Alerts**
- **Software Depot**
- **Customer Self Repair**
- **Insight Remote Support**
- **Serviceguard Solutions for HP-UX**
- **Single Point of Connectivity Knowledge (SPOCK) Storage compatibility matrix**
- **Storage white papers and analyst reports**

Accessing Hewlett Packard Enterprise Support

- For live assistance, go to the Contact Hewlett Packard Enterprise Worldwide website:

  https://www.hpe.com/info/assistance

- To access documentation and support services, go to the Hewlett Packard Enterprise Support Center website:

  https://www.hpe.com/support/hpesc

Information to collect

- Technical support registration number (if applicable)
- Product name, model or version, and serial number
- Operating system name and version
- Firmware version
- Error messages
- Product-specific reports and logs
- Add-on products or components
- Third-party products or components

Accessing updates

- Some software products provide a mechanism for accessing software updates through the product interface. Review your product documentation to identify the recommended software update method.
- To download product updates:

  Hewlett Packard Enterprise Support Center

  https://www.hpe.com/support/hpesc

Hewlett Packard Enterprise Support Center: Software downloads

https://www.hpe.com/support/downloads

My HPE Software Center

https://www.hpe.com/software/hpesoftwarecenter

- To subscribe to eNewsletters and alerts:

  https://www.hpe.com/support/e-updates

- To view and update your entitlements, and to link your contracts and warranties with your profile, go to the Hewlett Packard Enterprise Support Center **More Information on Access to Support Materials** page:

  https://www.hpe.com/support/AccessToSupportMaterials

> **IMPORTANT:**
> Access to some updates might require product entitlement when accessed through the Hewlett Packard Enterprise Support Center. You must have an HPE Passport set up with relevant entitlements.

Customer self repair

Hewlett Packard Enterprise customer self repair (CSR) programs allow you to repair your product. If a CSR part needs to be replaced, it will be shipped directly to you so that you can install it at your convenience. Some parts do not qualify for CSR. Your Hewlett Packard Enterprise authorized service provider will determine whether a repair can be accomplished by CSR.

For more information about CSR, contact your local service provider.

Remote support

Remote support is available with supported devices as part of your warranty or contractual support agreement. It provides intelligent event diagnosis, and automatic, secure submission of hardware event notifications to Hewlett Packard Enterprise, which initiates a fast and accurate resolution based on the service level of your product. Hewlett Packard Enterprise strongly recommends that you register your device for remote support.

If your product includes additional remote support details, use search to locate that information.

HPE Get Connected

https://www.hpe.com/services/getconnected

HPE Pointnext Tech Care

https://www.hpe.com/services/techcare

HPE Datacenter Care

https://www.hpe.com/services/datacentercare

Acronyms and abbreviations

CM
chassis management

iLO
integrated Lights-Out

LTE
long-term evolution

PCI
peripheral component interconnect

PCIe
peripheral component interconnect express

PXE
preboot execution environment

PXI
PCI eXtensions for instrumentation

PXIe
PCI eXtensions for instrumentation express

QSFP+
enhanced quad small form-factor pluggable

SFP+
enhanced small form-factor pluggable

UEFI
Unified Extensible Firmware Interface

UID

unit identification

WiFi
wireless fidelity

WLAN
wireless local area network

WWAN
wireless wide area network

Documentation feedback

Hewlett Packard Enterprise is committed to providing documentation that meets your needs. To help us improve the documentation, use the **Feedback** button and icons (located at the bottom of an opened document) on the Hewlett Packard Enterprise Support Center portal (**https://www.hpe.com/support/hpesc**) to send any errors, suggestions, or comments. All document information is captured by the process.