HPE Moonshot, IoT, and Converged Edge Systems Option Guide

Part Number: 10-191024-Q124
Published: January 2024
Edition: 1

HPE Moonshot, IoT, and Converged Edge Systems Option Guide

Abstract

This guide provides information on the options available for the HPE Moonshot, IoT, and Converged Edge Systems.

Part Number: 10-191024-Q124
Published: January 2024
Edition: 1

© Copyright 2018–2024 Hewlett Packard Enterprise Development LP

Notices

The information contained herein is subject to change without notice. The only warranties for Hewlett Packard Enterprise products and services are set forth in the express warranty statements accompanying such products and services. Nothing herein should be construed as constituting an additional warranty. Hewlett Packard Enterprise shall not be liable for technical or editorial errors or omissions contained herein.

Confidential computer software. Valid license from Hewlett Packard Enterprise required for possession, use, or copying. Consistent with FAR 12.211 and 12.212, Commercial Computer Software, Computer Software Documentation, and Technical Data for Commercial Items are licensed to the U.S. Government under vendor's standard commercial license.

Links to third-party websites take you outside the Hewlett Packard Enterprise website. Hewlett Packard Enterprise has no control over and is not responsible for information outside the Hewlett Packard Enterprise website.

Acknowledgments

Intel®, Itanium®, Pentium®, Xeon®, Intel Inside®, and the Intel Inside logo are trademarks of Intel Corporation in the U.S. and other countries.

Microsoft®, Windows®, and Windows Server® are either registered trademarks or trademarks of Microsoft Corporation in the United States and/or other countries.

Linux® is the registered trademark of Linus Torvalds in the U.S. and other countries.

microSD is a trademark or a registered trademark of SD-3C in the United States, other countries or both.

Red Hat® Enterprise Linux is a registered trademark of Red Hat, Inc. in the United States and other countries.

VMware® is a registered trademark or a trademark of VMware, Inc. in the United States and/or other jurisdictions.

Table of contents

Introduction....6
Supported hardware options....6
Firmware requirement....8
Option information for HPE Edgeline EL300 Converged Edge System....8
SD card option kit....8
Additional information....9
HPE EL WiFi Intel AC9260 option kit....9
Capabilities....9
Supported operating systems....9
Known issues and limitations....10
HPE EL WWAN 4G/LTE Wide Temp option kit....10
Capabilities....10
Supported operating systems....10
Additional information....11
M.2 SSD module option....11
SFF to M.2 adapter option kit....11
Capabilities....11
Supported operating systems....11
Option information for HPE Edgeline EL1000 Converged Edge System....12
HPE Edgeline NVMe HHHL M.2 Enablement Kit....12
Capabilities....13
Minimum firmware requirements....13
HPE EL WiFi/BT Intel AC9260 option kit....14
HPE WWAN LTE EM7565 module kit....15
Network adapters for HPE Edgeline EL1000 Converged Edge System....15
GPU card option....15
Additional information....16
Storage controllers....16
Supported operating systems....16
Option information for HPE Edgeline EL4000 Converged Edge System....17
HPE Edgeline NVMe HHHL M.2 Enablement Kit....17
Capabilities....18
Minimum firmware requirements....18
Network adapters....19

GPU card option 19
Additional information 20
Storage controllers 20
Supported operating systems 20
Option information for HPE Edgeline EL8000 Converged Edge System 21
8 SFF SAS/SATA drive bay option 21
Capabilities 22
Additional information 22
Supported operating systems 22
Option information for HPE Edgeline EL8000t Converged Edge System 23
4x on-board NVMe M.2 option 23
Capabilities 23
Supported operating systems 23
Option information for HPE ProLiant e910 Server Blade 24
HPE ProLiant e910 NVMe M.2 enablement kit 24
Network adapters 24
GPU card option 24
Additional information 25
GPU power enablement option 25
PCIe riser option 25
Software requirements 26
Supported operating systems 26
Option information for HPE ProLiant e910t Server Blade 26
HPE ProLiant e910t NVMe M.2 enablement kit 26
GPU card option 27
Network risers 27
PCIe riser board option 27
Supported operating systems 28
Persistent DIMMS 28
Option information for HPE Edgeline e920 Server Blade 28
HPE Edgeline e920 NVMe M.2 enablement kit 28
GPU card option 29
PCIe riser board option 29
Network adapters for e920 server blade 30
Supported operating systems 30
Persistent DIMMS 31
Option information for HPE Edgeline e920d Server Blade 31
HPE Edgeline e920d NVMe M.2 enablement kit 31

GPU card option ... 32
PCIe riser board option ... 32
Network adapters for e920d server blade ... 32
Supported operating systems ... 33
Persistent DIMMS ... 33
Option information for HPE Edgeline e920t Server Blade ... 33
HPE Edgeline e920t NVMe M.2 enablement kit ... 34
GPU card option ... 34
PCIe riser board option ... 35
Network adapters for e920t server blade ... 35
Supported operating systems ... 35
Persistent DIMMS ... 36
Operating System Boot Device ... 36
Storage Controller ... 36
Option information for HPE Edgeline e930t Server Blade ... 36
HPE Edgeline e930t NVMe M.2 enablement kit ... 37
GPU card option ... 37
PCIe riser board option ... 37
Network adapters for e930t server blade ... 37
Supported operating systems ... 38
Option information for HPE ProLiant m510 Server Blade ... 38
HPE Edgeline VPU module with Intel® Movidius® Myriad X ... 38
Capabilities ... 38
Supported operating systems ... 38
Minimum firmware requirements ... 39
Software requirements ... 39
Option information for HPE ProLiant m710x and m710x-L Server Blade ... 39
HPE Edgeline VPU module with Intel® Movidius® Myriad X ... 39
Capabilities ... 40
Supported operating systems ... 40
Minimum firmware requirements ... 40
Software requirements ... 41
Option information for HPE ProLiant m750 Server Blade ... 41
M.2 SSD module option ... 41
Supported operating systems ... 41
Support and other resources ... 42

Introduction

This guide provides information on the options available for the HPE IoT and Converged Edge Systems.

Subtopics

Supported hardware options
Firmware requirement

Supported hardware options

Hardware option	HPE product compatible with the option
GPU card option	HPE Edgeline EL1000 Converged Edge System V3 chassis
	HPE Edgeline EL4000 Converged Edge System V3 chassis
	HPE ProLiant e910 2U Server Blade
	HPE Edgeline e930t 1U Server Blade
GPU power enablement board option	HPE ProLiant e910 2U Server Blade
HPE Edgeline NVMe HHHL M.2 Enablement Kit	HPE Edgeline EL1000 Converged Edge System V3 chassis
	HPE Edgeline EL4000 Converged Edge System V3 chassis
HPE Edgeline NVMe M.2 Enablement Kit	HPE Edgeline e930t 1U Server Blade
HPE ProLiant e910 NVMe M.2 Enablement Kit	• HPE ProLiant e910 1U Server Blade • HPE ProLiant e910 2U Server Blade • HPE ProLiant e910t Server Blade
HPE Edgeline VPU module with Intel® Movidius® Myriad X	HPE ProLiant m510 Server blade

NOTE:

Movidius Myriad X is supported on the HPE ProLiant m510 blade only when the blade is installed in an Edgeli

Hardware option	HPE product compatible with the option
	ne EL1000 or EL4000 Converged Edge System.
	HPE ProLiant m710x and m710x-L Server blade **NOTE:** Movidius Myriad X is supported on the HPE ProLiant m710x and m710x-L blade only when the blade is installed in an Edgeline EL1000 or EL4000 Converged Edge System.
HPE EL WiFi Intel AC9260 option	HPE Edgeline EL300 Converged Edge System
HPE EL WWAN 4G/LTE Wide Temp option	HPE Edgeline EL300 Converged Edge System
M.2 SSD module option	HPE Edgeline EL300 Converged Edge System
NVMe M.2 option	HPE Edgeline EL8000t Converged Edge System
Networking options	HPE Edgeline EL1000 Converged Edge System
	HPE Edgeline EL4000 Converged Edge System
Network riser option	• HPE ProLiant e910 1U Server Blade • HPE ProLiant e910 2U Server Blade • HPE ProLiant e910t Server Blade
Network adapter option	HPE Edgeline e930t 1U Server Blade
PCIe riser option	• HPE ProLiant e910 1U Server Blade • HPE ProLiant e910 2U Server Blade • HPE ProLiant e910t Server Blade
PCIe riser option	• HPE Edgeline e920 1U Server Blade • HPE Edgeline e920d 2U Server Blade • HPE Edgeline e920t Server Blade • HPE Edgeline e930t Server Blade
SD card option	HPE Edgeline EL300 Converged Edge System
SFF to M.2 adapter option	HPE Edgeline EL300 Converged Edge System
Storage Controller option	HPE Edgeline EL1000 Converged Edge System V3 chassis
	HPE Edgeline EL4000 Converged Edge System V3 chassis

Hardware option	HPE product compatible with the option
8SFF SAS/SATA drive bay option	HPE Edgeline EL8000 Converged Edge System

Firmware requirement

IMPORTANT:

If no specific firmware requirement is listed for an option, then all firmware versions are supported by default.

Option information for HPE Edgeline EL300 Converged Edge System

The HPE Edgeline EL300 Converged Edge system is available in two base configurations:

- HPE Edgeline EL300 Mini-ITX Converged Edge System (P06211-B21)
- HPE Edgeline EL300 V2 Converged Edge System (P25828-B21)

Subtopics

SD card option kit
HPE EL WiFi Intel AC9260 option kit
HPE EL WWAN 4G/LTE Wide Temp option kit
M.2 SSD module option
SFF to M.2 adapter option kit
Supported operating systems

SD card option kit

The HPE Edgeline EL300 Converged Edge System supports HPE EL 8GB Wide Temp SD card.

For detailed installation instructions for this option, see the HPE EL300 Converged Edge System Setup and Configuration Guide at **https://www.hpe.com/support/EL300-SetupConfig-en**.

Subtopics

Additional information

Additional information

The SD card supports -30°C to 70°C operating temperature.

HPE EL WiFi Intel AC9260 option kit

The HPE EL WiFi Intel AC9260 option is compatible with the HPE Edgeline EL300 Converged Edge System.

For detailed installation instructions for this option, see the HPE EL300 Converged Edge System Setup and Configuration Guide at **https://www.hpe.com/support/EL300-SetupConfig-en**.

Subtopics

Capabilities
Supported operating systems
Known issues and limitations

Capabilities

This option enables remote management of the HPE Edgeline EL300 Mini-ITX Converged Edge System.

Supported operating systems

List of supported operating systems for the option:

- Microsoft Windows 10 (64-bit)
- Microsoft Windows 10 IoT Enterprise
- Red Hat Enterprise Linux (Minimum supported 7.3, Maximum supported 7.6)

Known issues and limitations

The HPE EL WiFi Intel AC9260 module does not support Red Hat Enterprise Linux 7.3 Server operating system.

HPE EL WWAN 4G/LTE Wide Temp option kit

The HPE EL WWAN 4G/LTE Wide Temp option is compatible with HPE Edgeline EL300 Mini-ITX Converged Edge System only.

For detailed installation instructions for this option, see the HPE EL300 Converged Edge System Setup and Configuration Guide at **https://www.hpe.com/support/EL300-SetupConfig-en**.

Subtopics

Capabilities
Supported operating systems
Additional information

Capabilities

This option enables remote management of the HPE Edgeline EL300 Mini-ITX Converged Edge System.

Supported operating systems

List of supported operating systems for the option:

- Microsoft Windows 10 (64-bit)
- Microsoft Windows 10 IoT Enterprise
- Red Hat Enterprise Linux (Minimum supported 7.3, Maximum supported 7.6)

Additional information

For LTE support on Red Hat Enterprise Linux 7.5 install the driver Networkmanager-wwan-1.10.2-13.el7.x86_64.

M.2 SSD module option

The M.2 SSD module option is compatible with the HPE Edgeline EL300 Converged Edge System.

For detailed installation instructions for this option, see the HPE EL300 Converged Edge System Setup and Configuration Guide at **https://www.hpe.com/support/EL300-SetupConfig-en**.

SFF to M.2 adapter option kit

The SFF to M.2 adapter option kit is compatible with the HPE Edgeline EL300 Converged Edge System.

For detailed installation instructions for this option, see the HPE EL300 Converged Edge System Setup and Configuration Guide at **https://www.hpe.com/support/EL300-SetupConfig-en**.

Subtopics

Capabilities

Capabilities

The SFF to M.2 adapter is required for installing SATA M.2 SSD in the HPE Edgeline EL300 Converged Edge System.

Supported operating systems

Supported operating systems for the HPE Edgeline EL300 Converged Edge system.

- Microsoft Windows 10 Enterprise x64

- Microsoft Windows 10 IoT Enterprise
- Microsoft Windows Server 2016
- Red Hat Enterprise Linux 7 Server (Minimum supported: 7.3, Maximum supported: 7.6)
- Red Hat Enterprise Linux 8 Server (Minimum Supported: 8.0)

Option information for HPE Edgeline EL1000 Converged Edge System

Subtopics

HPE Edgeline NVMe HHHL M.2 Enablement Kit
HPE EL WiFi/BT Intel AC9260 option kit
HPE WWAN LTE EM7565 module kit
Network adapters for HPE Edgeline EL1000 Converged Edge System
GPU card option
Storage controllers
Supported operating systems

HPE Edgeline NVMe HHHL M.2 Enablement Kit

The HPE Edgeline NVMe HHHL M.2 Enablement kit is compatible with the HPE Edgeline EL1000 Converged Edge System V3 chassis.

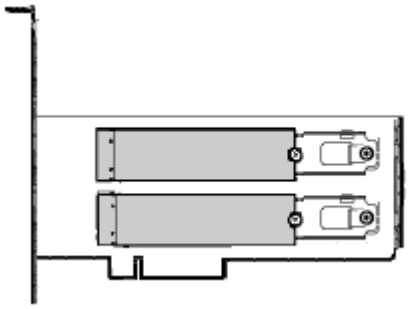

IMPORTANT: When installing the adapter card, top slot of the PCIe cage is preferred as slot 1.

For detailed installation instructions for this option, see the HPE Edgeline EL1000 System User Guide at **https://www.hpe.com/info/edgeline-docs**.

Subtopics

Capabilities
Minimum firmware requirements

Capabilities

The HPE Edgeline NVMe HHHL M.2 Enablement kit supports the following drives:

- 256 GB NVMe M.2 2280 SSD
- 512 GB NVMe M.2 2280 SSD
- 960 GB NVMe x4 MU M.2 22110XT SSD
- 1,024 GB NVMe M.2 2280 SSD
- 2,048 GB NVMe M.2 2280 SSD
- 1.92 TB NVMe x4 MU M.2 22110XT SSD
- 3.84 TB NVMe x4 MU M.2 22110XT SSD
- 256GB NVMe x4 RI M.2 2280 XT SSD
- 512GB NVMe x4 RI M.2 2280 XT SSD
- 1TB NVMe x4 RI M.2 2280 XT SSD

Minimum firmware requirements

Firmware installed on the HPE Edgeline server blade and on the Edgeline chassis must meet the minimum requirements listed to ensure proper functioning of HPE Edgeline NVMe HHHL M.2 Enablement option.

HPE Edgeline EL1000 chassis

Supported server cartridge	Minimum firmware requirement
HPE ProLiant m510	• HPE ProLiant m510 BIOS version 1.72_10-29-2018 • EL4000 and EL1000 V3 Chassis Controller Firmware version 4.30 • EL1000 PCIe and PXI CPLD version 0B
HPE ProLiant m710x and m710x-L	• HPE ProLiant m710x and m710x-L BIOS version 1.72_10-09-2018 • HPE ProLiant m710x and m710x-L CPLD version 16 • EL4000 and EL1000 V3 Chassis Controller Firmware version 4.27 • EL1000 PCIe and PXI CPLD version 0B
HPE Proliant m750	• HPE ProLiant m750 Server Blade (H09) BIOS version 1.40_01-25-2021 • HPE Edgeline EL4000 and EL1000 Chassis Controller Firmware version 4.33 • HPE ProLiant m750 Server Blade Chassis Programmable Logic Device Firmware version 06 • HPE Edgeline EL1000 PCIe and PXI Chassis Programmable Logic Device 0B

HPE EL WiFi/BT Intel AC9260 option kit

The HPE EL WiFi/BT Intel AC9260 option is compatible with the HPE Edgeline EL1000 Converged Edge System.

For detailed installation instructions for this option, see the HPE Edgeline EL1000 System User Guide .

HPE WWAN LTE EM7565 module kit

The HPE WWAN LTE EM7565 module is compatible with HPE Edgeline EL1000 Converged Edge System.

For detailed installation instructions for this option, see the HPE Edgeline EL1000 System User Guide .

Network adapters for HPE Edgeline EL1000 Converged Edge System

HPE Edgeline EL1000 Converged Edge System supports the following network adapters:

- HPE Infiniband EDR/Ethernet 100Gb 2-port 841QSFP28 adapter
- HPE Infiniband EDR/Ethernet 10/40Gb 2-port 544+QSFP adapter
- HPE Ethernet 10/25Gb two-port 640SFP28 adapter
- HPE X120 1G SFP RJ45 T Transceiver
- HPE BladeSystem c-Class Virtual Connect 1G SFP SX Transceiver
- HPE BladeSystem c-Class Virtual Connect 1G SFP RJ-45 Transceiver
- HPE BladeSystem c-Class 10Gb SFP+ SR Transceiver

GPU card option

The HPE Edgeline EL1000 Converged Edge System V3 chassis supports:

- HPE NVIDIA Tesla T4 16GB Module
- HPE Nvidia Quadro P1000 card

Subtopics

Additional information

Additional information

For list of supported GPUs for HPE servers, see the document on the **Hewlett Packard Enterprise website**.

Storage controllers

The HPE Edgeline EL1000 Converged Edge system supports internal and external storage controller.

Supported storage controllers:

- HPE H240 12Gb two-port Smart Host Bus Adapter (Internal)
- HPE H241 12Gb two-port Smart Host Bus Adapter (External)

Supported operating systems

- Microsoft Windows 10 IoT Enterprise
- Microsoft Windows Server 2016
- Microsoft Windows Server 2019
- Microsoft Windows 8.1 Enterprise (x64) (**Note**: Support will be provided upon request.)
- Microsoft Windows 10 (x64) (**Note**: Support will be provided upon request.)
- Red Hat Enterprise Linux 6 Server (64-bit) (Minimum supported: 6.4, Maximum supported: 6.10)
- Red Hat Enterprise Linux 7 Server (Minimum supported: 7.0, Maximum supported: 7.8)
- Red Hat Enterprise Linux 8 Server (Minimum supported: 8.1)
- SUSE Linux Enterprise Server 12 (Minimum supported: SP4)
- SUSE Linux Enterprise Server 15 (Minimum Supported: Base CentOS 7 (Minimum support: 7.5, Maximum support: 7.6)
- CentOS 7 (Minimum support: 7.5, Maximum support: 7.6)
- Citrix XenServer 7.0
- Citrix XenServer 7.1

- VMware vSphere 6.0 (Minimum supported: Base OS, Maximum supported: U3)
- VMware vSphere 6.5 (Minimum supported: Base OS, Maximum supported: U2)
- VMware vSphere 6.7 (Minimum supported: Base OS, Maximum supported: U3)
- VMware vSphere 7.0 (Minimum supported: Base OS)
- Ubuntu 18.04.2 LTS 64-bit

Option information for HPE Edgeline EL4000 Converged Edge System

Subtopics

HPE Edgeline NVMe HHHL M.2 Enablement Kit
Network adapters
GPU card option
Storage controllers
Supported operating systems

HPE Edgeline NVMe HHHL M.2 Enablement Kit

The HPE Edgeline NVMe HHHL M.2 Enablement kit is compatible with the HPE Edgeline EL4000 Converged Edge System V3 chassis.

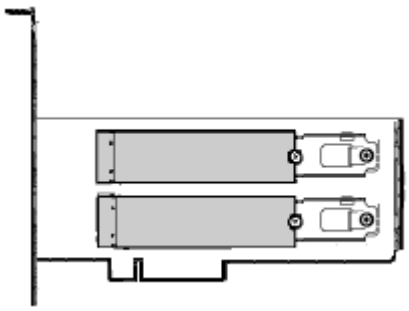

For detailed installation instructions for this option, see the HPE Edgeline EL4000 System User Guide at **https://www.hpe.com/info/edgeline-docs**.

Subtopics

Capabilities
Minimum firmware requirements

Capabilities

The HPE Edgeline NVMe HHHL M.2 Enablement kit supports the following drives:

- 256 GB NVMe M.2 2280 SSD
- 512 GB NVMe M.2 2280 SSD
- 960 GB NVMe x4 MU M.2 22110XT SSD
- 1,024 GB NVMe M.2 2280 SSD
- 2,048 GB NVMe M.2 2280 SSD
- 1.92 TB NVMe x4 MU M.2 22110XT SSD
- 3.84 TB NVMe x4 MU M.2 22110XT SSD
- 256GB NVMe x4 RI M.2 2280 XT SSD
- 512GB NVMe x4 RI M.2 2280 XT SSD
- 1TB NVMe x4 RI M.2 2280 XT SSD

Minimum firmware requirements

Firmware installed on the HPE Edgeline server blade and on the Edgeline chassis must meet the minimum requirements to ensure proper functioning of HPE Edgeline NVMe HHHL M.2 Enablement option.

HPE Edgeline EL4000 chassis

Supported server cartridge	Minimum firmware requirement
HPE ProLiant m510	• EL4000 and EL1000 V3 Chassis Controller Firm ware version 4.30 • HPE ProLiant m510 BIOS version 1.72_10-29-2 018
HPE ProLiant m710x and m710x-L	• HPE ProLiant m710xand m710x-L BIOS version 1.72_10-09-2018

Supported server cartridge	Minimum firmware requirement
	• EL4000 and EL1000 V3 Chassis Controller Firmware version 4.27 • HPE ProLiant m710x and m710x-L CPLD version 16
HPE Proliant m750	• HPE ProLiant m750 Server Blade (H09) BIOS version 1.40_01-25-2021 • HPE Edgeline EL4000 and EL1000 Chassis Controller Firmware version 4.33 • HPE ProLiant m750 Server Blade Chassis Programmable Logic Device Firmware version 06

Network adapters

HPE Edgeline EL4000 Converged Edge System supports the following network adapters:

- HPE InfiniBand EDR/Ethernet 100Gb two-port 841QSFP28 adapter
- HPE InfiniBand EDR/Ethernet 10/40Gb two-port 544+QSFP adapter
- HPE Ethernet 10/25Gb two-port 640SFP28 adapter
- HPE BladeSystem c-Class Virtual Connect 1G SFP SX Transceiver
- HPE BladeSystem c-Class Virtual Connect 1G SFP RJ-45 Transceiver
- HPE BladeSystem c-Class 10Gb SFP+ SR Transceiver

GPU card option

The HPE Edgeline EL4000 Converged Edge System V3 chassis supports:

- HPE NVIDIA Tesla T4 16GB Module
- HPE AMD Radeon Pro WX4100

- HPE Nvidia Quadro P1000

Subtopics

Additional information

Additional information

For list of supported GPUs for HPE servers, see the document on the **Hewlett Packard Enterprise website**.

Storage controllers

The HPE Edgeline EL4000 Converged Edge system supports external storage controller.

Supported storage controller:

- HPE H241 12Gb two-port Smart Host Bus Adapter (External)

Supported operating systems

- Microsoft Windows 10 IoT Enterprise
- Microsoft Windows Server 2016
- Microsoft Windows Server 2019
- Microsoft Windows 8.1 Enterprise (x64) (**Note**: Support will be provided upon request.)
- Microsoft Windows 10 (x64) (**Note**: Support will be provided upon request.)
- Red Hat Enterprise Linux 6 Server (64-bit) (Minimum supported: 6.4, Maximum supported: 6.10)
- Red Hat Enterprise Linux 7 Server (Minimum supported: 7.0, Maximum supported: 7.8)
- Red Hat Enterprise Linux 8 Server (Minimum supported: 8.1)
- SUSE Linux Enterprise Server 12 (Minimum supported: SP4)

- SUSE Linux Enterprise Server 15 (Minimum Supported: Base CentOS 7 (Minimum support: 7.5, Maximum support: 7.6)
- CentOS 7 (Minimum support: 7.5, Maximum support: 7.6)
- Citrix XenServer 7.0
- Citrix XenServer 7.1
- VMware vSphere 6.0 (Minimum supported: Base OS, Maximum supported: U3)
- VMware vSphere 6.5 (Minimum supported: Base OS, Maximum supported: U2)
- VMware vSphere 6.7 (Minimum supported: Base OS, Maximum supported: U3)
- VMware vSphere 7.0 (Minimum supported: Base OS)
- Ubuntu 18.04.2 LTS 64-bit

Option information for HPE Edgeline EL8000 Converged Edge System

Subtopics

8 SFF SAS/SATA drive bay option
Supported operating systems

8 SFF SAS/SATA drive bay option

The HPE Edgeline EL8000 Converged Edge System supports 8 SFF SAS/SATA drive bay option. This option is installed in the EL8000 chassis.

HPE ProLiant 2U e910 server blade, with 2U left storage PCIe riser installed, is compatible with EL800 chassis with 8 SFF drive bay support.

Subtopics

Capabilities
Additional information

Capabilities

The drive bay supports up to 8 SFF SATA or SAS drives.

Supported drives:

- SAS drives
  - HPE 400GB SAS SFF SSD
  - HPE 800GB SAS SFF SSD
  - HPE 15.3 TB SAS SFF SSD
- SATA drives
  - HPE 480GB SATA SFF SSD
  - HPE 3.84TB SATA SFF SSD

Additional information

A storage enablement board must be installed in the EL8000 chassis for supporting 8 SFF SAS/SATA drive bay. This storage enablement board is factory installed.

Supported operating systems

- Microsoft Windows Server 2016
- Microsoft Windows Server 2019
- Microsoft Windows Server 2022
- Red Hat Enterprise Linux 7 Server (Minimum supported 7.9)
- Red Hat Enterprise Linux 8 Server (Minimum supported 8.3)
- VMware vSphere 6.7 (Minimum supported: U2)
- VMware vSphere 7.0 (Minimum supported: Base OS)

Option information for HPE Edgeline EL8000t Converged Edge System

Subtopics

4x on-board NVMe M.2 option
Supported operating systems

4x on-board NVMe M.2 option

The HPE Edgeline EL8000t Converged Edge System installs the e930t blade into the chassis. The e930t blade supports 4x on-board NVMe M.2. In addition, the e930t has an NVMe M.2 enablement kit that can support another 4x NVMe M.2 option.

Subtopics

Capabilities

Capabilities

The supported NVMe M.2 options:

- HPE EL 960 GB NVMe MU M.2 22110 PM9A3 SSD
- HPE EL 1.92 TB NVMe MU M.2 22110 PM9A3 SSD
- HPE EL 3.84 TB NVMe MU M.2 22110 PM9A3 SSD

Supported operating systems

- Wind River Verizon OS WRCP 22.12
- SLES 15 SP4 MU or KISO

Option information for HPE ProLiant e910 Server Blade

Subtopics

HPE ProLiant e910 NVMe M.2 enablement kit
Network adapters
GPU card option
GPU power enablement option
PCIe riser option
Supported operating systems

HPE ProLiant e910 NVMe M.2 enablement kit

Both HPE ProLiant e910 1U and 2U server blades support the NVMe M.2 enablement option.

Network adapters

HPE ProLiant e910 1U and 2U server blades support:

- HPE InfiniBand EDR/Ethernet 100Gb two-port 841QSFP28 adapter
- HPE Ethernet 10GB two-port 562SFP+ adapter
- HPE Ethernet 1Gb four-port 366T adapter
- HPE Ethernet 10/25Gb two-port 640SFP28 adapter
- HPE Ethernet 10/25Gb two-port 661SFP28 adapter
- Pensando DSP DSC-25 10/25G SFP28 card

GPU card option

GPU options supported by HPE ProLiant e910 1U and 2U server blades:

- HPE ProLiant e910 1U Server Blade
    - HPE NVIDIA Tesla T4 16GB Module

- HPE ProLiant e910 2U Server Blade
  - HPE NVIDIA Tesla T4 16GB Module
  - HPE NVIDIA Tesla V-100 32GB PCIe Module
  - HPE Intel FPGA PAC D5005 Accelerator
  - HPE NVIDIA Quadro RTX6000 GPU Module
  - HPE NVIDIA Tesla V100S PCIe 32GB Module

Subtopics

Additional information

Additional information

For list of supported GPUs for HPE servers, see the document on the **Hewlett Packard Enterprise website**.

GPU power enablement option

The HPE ProLiant e910 2U server blade supports the GPU power enablement option.

PCIe riser option

The HPE ProLiant e910 1U and 2U server blades support the following riser options:

- HPE ProLiant e910 1U x16 half-height, half-length left riser option
- HPE ProLiant e910 2U 2x8 half-height, half-length right riser option
- HPE ProLiant e910 2U 2x8 full-height, full-length left riser option
- HPE ProLiant e910 2U x16 full-height, full-length left riser option

Subtopics

Software requirements

Software requirements

When configuring PCIe devices, enabling PCIe Power Management (ASPM) must be supported by the PCIe device. While you may be able to select the option, ASPM will only be active for PCIe devices that support it.

Supported operating systems

- Microsoft Windows Server 2016
- Microsoft Windows Server 2019
- Microsoft Windows Server 2022
- Red Hat Enterprise Linux 7 Server (Minimum supported 7.9)
- Red Hat Enterprise Linux 8 Server (Minimum supported 8.3)
- VMware vSphere 6.7 (Minimum supported: U2)
- VMware vSphere 7.0 (Minimum supported: Base OS)

Option information for HPE ProLiant e910t Server Blade

Subtopics

HPE ProLiant e910t NVMe M.2 enablement kit
GPU card option
Network risers
PCIe riser board option
Supported operating systems
Persistent DIMMS

HPE ProLiant e910t NVMe M.2 enablement kit

The server blade supports the NVMe M.2 enablement option.

GPU card option

The HPE ProLiant e910t server blade supports:

- HPE NVIDIA Tesla T4 16GB Module
- NVIDIA T4 16GB Computational Accelerator for HPE
- NVIDIA A2 16GB PCIe Non-CEC Accelerator for HPE
- NVIDIA A100 80GB PCIe Non-CEC Accelerator for HPE
- NVIDIA A40 48GB PCIe Non-CEC Accelerator for HPE

Network risers

HPE ProLiant e910t server blade supports the following network risers:

- HPE e910t four-port 10GBe QSFP+ Network riser
- HPE e910t two-port 1GBe RJ45 Network riser
- HPE e910t two-port 10GBe SPF+ Network riser
- HPE Ethernet 10/25Gb 2-port 661SFP28
- Pensando DSP DSC-25 10/25G SFP28 card

PCIe riser board option

The HPE ProLiant e910t server blade supports the following riser options:

- x16 full-height, full-length + x8 half-height, half-length PCIe riser board
- 2x8 full-height, full-length, + x8 half-height, half-length PCIe riser board

Supported operating systems

- Microsoft Windows Server 2016
- Microsoft Windows Server 2019
- Microsoft Windows Server 2022
- Red Hat Enterprise Linux 7 Server (Minimum supported 7.9)
- Red Hat Enterprise Linux 8 Server (Minimum supported 8.3)
- VMware vSphere 6.7 (Minimum supported: U2)
- VMware vSphere 7.0 (Minimum supported: Base OS)

Persistent DIMMS

- PMM, 128GB 3200 MT/s PMEM
- PMM, 256GB 3200 MT/s PMEM

Option information for HPE Edgeline e920 Server Blade

Subtopics

HPE Edgeline e920 NVMe M.2 enablement kit
GPU card option
PCIe riser board option
Network adapters for e920 server blade
Supported operating systems
Persistent DIMMS

HPE Edgeline e920 NVMe M.2 enablement kit

The server blade supports the NVMe M.2 enablement option supports the following drives:

- Intel Optane 375GB NVMe Gen3 Mainstream Performance Write Intensive M.2 22110 SSD for HPE

- Intel Optane 375GB NVMe Gen3 Mainstream Performance Write Intensive M.2 22110 SSD for HPE
- HPE Edgeline 960GB NVMe Gen4 Mainstream Performance Mixed Use M.2 22110 Extended Temp PM9A3 SSD
- HPE Edgeline 1.92TB NVMe Gen4 Mainstream Performance Mixed Use M.2 22110 Extended Temp PM9A3 SSD
- HPE Edgeline 3.84TB NVMe Gen4 Mainstream Performance Mixed Use M.2 22110 Extended Temp PM9A3 SSD

GPU card option

The HPE Edgeline e920 Server Blade supports:

- NVIDIA T4 16GB Computational Accelerator for HPE
- NVIDIA A2 16GB PCIe Non-CEC Accelerator for HPE
- NVIDIA T4 16GB Computational Accelerator
- NVIDIA Quadro P1000 GPU Module
- NVIDIA A100 40GB GPU Module
- NVIDIA A100 80GB GPU Module
- NVIDIA Quadro RTX6000 GPU Module
- NVIDIA Tesla V100S 32GB GPU
- NVIDIA A2 16GB PCIe Non-CEC Accelerator
- NVIDIA A40 48GB (CEC and Non-CEC)
- AI 100 Accelerator Card

PCIe riser board option

The HPE Edgeline e920 1U Server Blade supports the following riser options:

- HPE Edgeline e920 1U Left x16 half-height, half-length PCIe riser board

- HPE Edgeline e920 1U OCP Riser board
- HPE Edgeline e920 1U 10GbE 2p Net Mezz

Network adapters for e920 server blade

- HPE Ethernet 10Gb 2-port SFP+ X710-DA2 Adapter
- HPE Ethernet 1Gb 4-port BASE-T I350-T4V2 Adapter
- HPE Ethernet 10/25Gb 2-port SFP28 MCX4121A-ACUT Adapter
- HPE Ethernet 10Gb 2-port 562SFP+ Adapter
- HPE Ethernet 10/25Gb 2-port 640SFP28 Adapter
- HPE Ethernet 10/25Gb 2-port 661SFP28 Adapter
- Intel E810-CQDA2 Ethernet 100Gb 2-port QSFP28 Adapter for HPE
- Intel E810-CQDA2 Ethernet 100Gb 2-port QSFP28 OCP3 Adapter for HPE
- Intel E810-XXVDA2 Ethernet 10/25Gb 2-port SFP28 OCP3 Adapter for HPE
- Intel E810-XXVDA4 Ethernet10/25Gb 4-port SFP28 Adapter
- Intel E810-CQDA2 Ethernet 100Gb2-port QSFP28 OCP3 Adapter
- Intel E810-XXVDA2 Ethernet 10/25Gb 2-port SFP28 OCP3 Adapter
- Mellanox MCX623106AS-CDAT Ethernet 100Gb 2-port QSFP56 Adapter for HPE
- Mellanox ConnectX- 6 Lx 10GbE 2-port Network Mezzanine Kit
- Pensando Distributed Services Platform DSC-25 Enterprise 10/25Gb 2-port SFP28 Card
- Pensando Distributed Services Platform DSC-25 10/25Gb 2-port OCP3 Card

Supported operating systems

- Microsoft Windows Server 2022
- Microsoft Windows Server 2016

- Microsoft Windows Server 2019
- Red Hat Enterprise Linux 7 Server (Minimum supported 7.9)
- Red Hat Enterprise Linux 8 Server (Minimum supported 8.3)
- VMware vSphere 6.7 (Minimum supported: U2)
- VMware vSphere 7.0 (Minimum supported: Base OS)

Persistent DIMMS

- PMM, 128GB 3200 MT/s PMEM
- PMM, 256GB 3200 MT/s PMEM

Option information for HPE Edgeline e920d Server Blade

Subtopics

HPE Edgeline e920d NVMe M.2 enablement kit
GPU card option
PCIe riser board option
Network adapters for e920d server blade
Supported operating systems
Persistent DIMMS

HPE Edgeline e920d NVMe M.2 enablement kit

The server blade supports the NVMe M.2 enablement option supports the following drives:

- Intel Optane 375GB NVMe Gen3 Mainstream Performance Write Intensive M.2 22110 SSD for HPE
- HPE Edgeline 960GB NVMe Gen4 Mainstream Performance Mixed Use M.2 22110 Extended Temp PM9A3 SSD
- HPE Edgeline 1.92TB NVMe Gen4 Mainstream Performance Mixed Use M.2 22110 Extended Temp PM9A3 SSD

- HPE Edgeline 3.84TB NVMe Gen4 Mainstream Performance Mixed Use M.2 22110 Extended Temp PM9A3 SSD

GPU card option

The HPE Edgeline e920d Server Blade supports:

- NVIDIA T4 16GB Computational Accelerator for HPE
- NVIDIA A2 16GB PCIe Non-CEC Accelerator for HPE
- NVIDIA A100 80GB PCIe Non-CEC Accelerator for HPE
- NVIDIA A40 48GB PCIe Non-CEC Accelerator for HPE
- HPE ProLiant e910 CPU 8-pin Cable Kit
- HPE ProLiant e910 300W GPU Power Enablement Kit
- NVIDIA A2 16GB PCIe Non-CEC Accelerator

PCIe riser board option

The HPE Edgeline e920d 2U Server Blade supports the following riser options:

- HPE Edgeline e920d 2U x16 full height, full-length + x8 full height, full-length Storage Enablement FIO Left Riser board
- HPE Edgeline e920d 2U x8/x8 half height, half-length Right Riser board

Network adapters for e920d server blade

- HPE Ethernet 10Gb 2-port SFP+ X710-DA2 Adapter
- HPE Ethernet 1Gb 4-port BASE-T I350-T4V2 Adapter
- HPE Ethernet 10/25Gb 2-port SFP28 MCX4121A-ACUT Adapter

  Intel E810-XXVDA4 Ethernet 10/25Gb 4-port SFP28 Adapter for HPE

- Intel E810-2CQDA2 Ethernet 100Gb 2-port QSFP28 Adapter for HPE
- Intel E810-CQDA2 Ethernet 100Gb 2-port QSFP28 Adapter for HPE
- Mellanox MCX623106AS-CDAT Ethernet 100Gb 2-port QSFP56 Adapter for HPE
- Intel E810-XXVDA2 Ethernet 10/25Gb 2-port SFP28 Adapter for HPE
- Pensando Distributed Services Platform DSC-25 Enterprise 10/25Gb 2-port SFP28 Card

Supported operating systems

- Microsoft Windows Server 2016
- Microsoft Windows Server 2019
- Microsoft Windows Server 2022
- Red Hat Enterprise Linux 7 Server (Minimum supported 7.9)
- Red Hat Enterprise Linux 8 Server (Minimum supported 8.3)
- VMware vSphere 6.7 (Minimum supported: U2)
- VMware vSphere 7.0 (Minimum supported: Base OS)

Persistent DIMMS

- PMM, 128GB 3200 MT/s PMEM
- PMM, 256GB 3200 MT/s PMEM

Option information for HPE Edgeline e920t Server Blade

Subtopics

HPE Edgeline e920t NVMe M.2 enablement kit
GPU card option

PCIe riser board option
Network adapters for e920t server blade
Supported operating systems
Persistent DIMMS
Operating System Boot Device
Storage Controller

HPE Edgeline e920t NVMe M.2 enablement kit

The server blade supports the NVMe M.2 enablement option supports the following drives:

- HPE 256GB NVMe x4 Lanes Read Intensive M.2 2280 SSD
- HPE 512GB NVMe x4 Lanes Read Intensive M.2 2280 SSD
- HPE 1TB NVMe x4 Lanes Read Intensive M.2 2280 SSD
- HPE 2048GB NVMe x4 Lanes Read Intensive M.2 2280 SSD
- HPE EL 960GB NVMe x4 Lanes Mixed Use MU M.2 22110 SSD
- HPE EL 1.92TB NVMe x4 Lanes Mixed Use M.2 22110 SSD
- HPE EL 3.84TB NVMe x4 Lanes Mixed Use M.2 22110 SSD

GPU card option

The HPE Edgeline e920t Server Blade supports:

- Silicom ACC100 HHHL Vran Accelerator
- NVIDIA T4 16GB Computational Accelerator
- NVIDIA Quadro P1000 GPU Module
- NVIDIA A100 40GB GPU Module
- NVIDIA A100 80GB GPU Module
- NVIDIA Quadro RTX6000 GPU Module
- NVIDIA Tesla V100S 32GB GPU
- NVIDIA A2 16GB PCIe Non-CEC Accelerator

- NVIDIA A40 48GB (CEC and Non-CEC)
- AI 100 Accelerator Card
- Silicom ACC100 HHHL Vran Accelerator Operating System (WindRiver CP v21.05 Patch O4).

PCIe riser board option

The HPE Edgeline e920t Server Blade supports the following riser options:

x16 full-height, full-length + x16 half-height, half length PCIe riser board

Network adapters for e920t server blade

- HPE BladeSystem c-Class 10Gb SFP+ SR Transceiver
- HPE 25Gb SFP28 SR 100m Transceiver
- HPE 100Gb QSFP28 MPO SR4 100m Transceiver
- HPE Ethernet 10Gb 2-port 562SFP+ Adapter
- HPE Ethernet 10/25Gb 2-port 640SFP28 Adapter
- Aruba 1G SFP RJ45 T 100m Cat5e Transceiver
- Intel E810-XXVDA4 Ethernet 10/25Gb 4-port SFP28 Adapter
- Intel E810-CQDA2 Ethernet 100Gb2-port QSFP28 Adapter
- Intel E810-XXVDA2 Ethernet 10/25Gb 2-port SFP28 Adapter

Supported operating systems

- Microsoft Windows Server 2016
- Microsoft Windows Server 2019
- Microsoft Windows Server 2022

- Red Hat Enterprise Linux 7 Server (Minimum supported 7.6)
- Red Hat Enterprise Linux 8 Server (Minimum supported 8.0)
- VMware vSphere 6.7 (Minimum supported: U2)
- VMware vSphere 7.0 (Minimum supported: Base OS)

Persistent DIMMS

- PMM, 128GB 3200 MT/s PMEM
- PMM, 256GB 3200 MT/s PMEM

Operating System Boot Device

- HPE NS204i-p NVMe OS Boot Device

Storage Controller

HPE Smart Array P408i-p SR Gen10 12G SAS PCIe Plug-in Controller for e9102U, e920d and e920t

Option information for HPE Edgeline e930t Server Blade

Subtopics

HPE Edgeline e930t NVMe M.2 enablement kit
GPU card option
PCIe riser board option
Network adapters for e930t server blade
Supported operating systems

HPE Edgeline e930t NVMe M.2 enablement kit

The server blade supports the NVMe M.2 enablement option supports the following drives:

- HPE EL 960 GB NVMe MU M.2 22110 PM9A3 SSD
- HPE EL 1.92 TB NVMe MU M.2 22110 PM9A3 SSD
- HPE EL 3.84 TB NVMe MU M.2 22110 PM9A3 SSD

GPU card option

The HPE Edgeline e930t Server Blade supports:

- Silicom ACC100 HHHL Vran Accelerator
- HPE CES 2x6 4-pin PCIe Cable Kit
- S0K90C NVIDIA L40 48GB PCIe Accelerator
- S0K89C NVIDIA L4 24GB PCIe Accelerator

PCIe riser board option

The HPE Edgeline e930t Server Blade supports the following riser options:

- HPE Compute Edge Server e930 x16x16x16 PCIe Left Riser Kit
- HPE Compute Edge Server e930 x16 PCIe Right Riser Kit

Network adapters for e930t server blade

- HPE Edgeline 1/10Gb SFP+ SR 400m XCVR Transceiver
- HPE Edgeline 10/25Gb SFP28 SR 100m XCVR Transceiver
- HPE 25Gb SFP28 SR 100m Transceiver
- HPE Edgeline 100Gb QSFP28 MPO SR4 100m XCVR Transceiver

Supported operating systems

- Wind River Verizon OS WRCP 22.12
- SLES 15 SP4 MU or KISO

Option information for HPE ProLiant m510 Server Blade

Subtopics

HPE Edgeline VPU module with Intel® Movidius® Myriad X

HPE Edgeline VPU module with Intel® Movidius® Myriad X

Subtopics

Capabilities
Supported operating systems
Minimum firmware requirements
Software requirements

Capabilities

The Myriad X VPU is a visual processing unit. It supports facial recognition and video inference capabilities. The VPU module includes four Myriad X chips.

Supported operating systems

The HPE Edgeline VPU module with Intel® Movidius® Myriad X option supports:

- Microsoft Windows 10 (64-bit)
- Red Hat Enterprise Linux 7 Server (Minimum supported: 7.3, Maximum supported: 7.6)
- Red Hat Enterprise Linux 8 Server (Minimum Supported: 8.0)

Minimum firmware requirements

Firmware installed on the m510 server blade must meet the minimum requirement listed to ensure proper functioning of HPE Edgeline VPU module with Intel® Movidius® Myriad X.

Supported system	Minimum firmware requirement
HPE ProLiant m510	HPE ProLiant m510 BIOS version 1.74

Software requirements

Intel® OpenVINO™ is required to be installed on the host system in order for the system to use the VPU module. Go to the Intel® website to download OpenVINO™.

Option information for HPE ProLiant m710x and m710x-L Server Blade

Subtopics

HPE Edgeline VPU module with Intel® Movidius® Myriad X

HPE Edgeline VPU module with Intel® Movidius® Myriad X

Subtopics

Capabilities
Supported operating systems
Minimum firmware requirements
Software requirements

Capabilities

The Myriad X VPU is a visual processing unit. It supports facial recognition and video inference capabilities. The VPU module includes four Myriad X chips.

Supported operating systems

The HPE Edgeline VPU module with Intel® Movidius® Myriad X option supports:

- Microsoft Windows 10 (64-bit)
- Red Hat Enterprise Linux 7 Server (Minimum supported: 7.3, Maximum supported: 7.6)
- Red Hat Enterprise Linux 8 Server (Minimum Supported: 8.0)

Minimum firmware requirements

Firmware installed m710x, and m710x-L server blades must meet the minimum requirement listed to ensure proper functioning of HPE Edgeline VPU module with Intel® Movidius® Myriad X.

Supported system	Minimum firmware requirement
HPE ProLiant m710x and m710x-L	HPE ProLiant m710x and m710x-L BIOS version 1.74

Software requirements

Intel® OpenVINO™ is required to be installed on the host system in order for the system to use the VPU module. Go to the Intel® website to download OpenVINO™.

Option information for HPE ProLiant m750 Server Blade

Subtopics

M.2 SSD module option
Supported operating systems

M.2 SSD module option

The HPE ProLiant m750 Server Blade supports the following SSD drives:

- HPE 256GB PCIe M.2 2280 solid-state drive
- HPE 256GB NVMe x4 Lanes Read Intensive M.2 2280 SSD
- HPE 512GB NVMe x4 Lanes Read Intensive M.2 2280 SSD
- HPE 1TB NVMe x4 Lanes Read Intensive M.2 2280 SSD
- HPE 2.48TB NVMe x4 Lanes Read Intensive M.2 2280 SSD
- HPE Edgeline 960GB NVMe x4 Lanes Mixed Use M.2 22110 SSD
- HPE Edgeline 1.92TB NVMe x4 Lanes Mixed Use M.2 22110 SSD
- HPE Edgeline 3.84TB NVMe x4 Lanes Mixed Use M.2 22110 SSD

For detailed installation instructions for this option, see the HPE ProLiant m750 Server Blade User and Maintenance Guide at **https://www.hpe.com/support/m750-umg-en**.

Supported operating systems

- Microsoft Windows Server 2019

- Microsoft Windows Server 2022
- Microsoft Windows 10 (64-bit), Build 1809. 1803. 1909 and 21H2
- Microsoft Windows 11
- Red Hat Enterprise Linux 7 Server (Minimum supported: 7.6, Maximum supported: 7.8)
- Red Hat Enterprise Linux 8 Server (Minimum supported: 8.0, Maximum supported: 8.1)
- VMware vSphere 7.0 (Minimum supported):
    - CentOS 7 (Minimum support: 7.7)
    - CentOS 8 (Minimum support: 8.1)

Support and other resources

Websites

General websites

Hewlett Packard Enterprise Edgeline Documentation

www.hpe.com/info/edgeline-docs

Hewlett Packard Enterprise Edgeline Information

www.hpe.com/info/edgeline

Hewlett Packard Enterprise OT Link and Workload Orchestrator Information

https://www.hpe.com/psnow/doc/a00070905en_us?jumpid=in_hpesitesearch

Accessing Hewlett Packard Enterprise Support

- For live assistance, go to the Contact Hewlett Packard Enterprise Worldwide website:

  https://www.hpe.com/info/assistance

- To access documentation and support services, go to the Hewlett Packard Enterprise Support Center website:

  https://www.hpe.com/support/hpesc

Information to collect

- Technical support registration number (if applicable)

- Product name, model or version, and serial number
- Operating system name and version
- Firmware version
- Error messages
- Product-specific reports and logs
- Add-on products or components
- Third-party products or components

Accessing updates

- Some software products provide a mechanism for accessing software updates through the product interface. Review your product documentation to identify the recommended software update method.
- To download product updates:

  Hewlett Packard Enterprise Support Center

  https://www.hpe.com/support/hpesc

  My HPE Software Center

  https://www.hpe.com/software/hpesoftwarecenter

- To subscribe to eNewsletters and alerts:

  https://www.hpe.com/support/e-updates

- To view and update your entitlements, and to link your contracts and warranties with your profile, go to the Hewlett Packard Enterprise Support Center **More Information on Access to Support Materials** page:

  https://www.hpe.com/support/AccessToSupportMaterials

> **IMPORTANT:**
> Access to some updates might require product entitlement when accessed through the Hewlett Packard Enterprise Support Center. You must have an HPE Account set up with relevant entitlements.

Customer self repair

Hewlett Packard Enterprise customer self repair (CSR) programs allow you to repair your product. If a CSR part needs to be replaced, it will be shipped directly to you so that you can install it at your convenience. Some parts do not qualify for CSR.

For more information about CSR, contact your local service provider.

Remote support

Remote support is available with supported devices as part of your warranty or contractual support agreement. It provides intelligent event diagnosis, and automatic, secure submission of hardware event notifications to Hewlett Packard Enterprise, which initiates a fast and accurate resolution based on the service level of your product. Hewlett Packard Enterprise strongly recommends that you register your device for remote support.

If your product includes additional remote support details, use search to locate that information.

HPE Get Connected

https://www.hpe.com/services/getconnected

HPE Tech Care Service

https://www.hpe.com/services/techcare

HPE Complete Care

https://www.hpe.com/services/completecare