# HPE ProLiant DL385 Gen10 Plus Server - Product Information Reference

Part Number:
Published:
Edition:

# HPE ProLiant DL385 Gen10 Plus Server - Product Information Reference

## Abstract

Part Number:
Published:
Edition:

© Copyright –

## Notices

The information contained herein is subject to change without notice. The only warranties for HPE products and services are set forth in the express warranty statements accompanying such products and services. Nothing herein should be construed as constituting an additional warranty. HPE shall not be liable for technical or editorial errors or omissions contained herein.

Confidential computer software. Valid license from HPE required for possession, use, or copying. Consistent with FAR 12.211 and 12.212, Commercial Computer Software, Computer Software Documentation, and Technical Data for Commercial Items are licensed to the U.S. Government under vendor's standard commercial license.

Links to third-party websites take you outside the HPE website. HPE has no control over and is not responsible for information outside the HPE website.

## Acknowledgments

Intel®, Itanium®, Optane™, Pentium®, Xeon®, Intel Inside®, and the Intel Inside logo are trademarks of Intel Corporation in the U.S. and other countries.

AMD and the AMD EPYC™ and combinations thereof are trademarks of Advanced Micro Devices, Inc.

Microsoft® and Windows® are either registered trademarks or trademarks of Microsoft Corporation in the United States and/or other countries.

Adobe® and Acrobat® are trademarks of Adobe Systems Incorporated.

Java® and Oracle® are registered trademarks of Oracle and/or its affiliates.

UNIX® is a registered trademark of The Open Group.

All third-party marks are the property of their respective owners.

## Revision history

| Part number | Publication date | Edition | Summary of changes |
|---|---|---|---|

# Table of contents


Overview

- Summary ..... 6
  - Product description ..... 6
  - What's new ..... 6
- Standard Models ..... 7
  - New RoHS compliant part numbers ..... 7
  - Configurable models ..... 7
  - Pre-Configured models ..... 8
- Product features ..... 9

Specifications

- Physical specifications ..... 23
- Environmental specifications ..... 24
- Electrical specifications ..... 27
- Safety certifications ..... 28

Compatibility/Supportability

- Spare Parts ..... 28
  - New model specific parts lists ..... 29
  - Mechanical components ..... 29
  - System components ..... 32
  - Server options ..... 42
- Option Parts ..... 60
  - New Model Specific Parts Lists ..... 61
  - Processor ..... 61
  - Memory ..... 64
  - HPE Optical drives ..... 65
  - HPE Drives ..... 66
  - Hard drive kits ..... 80
  - Media bay kits ..... 82
  - HPE Storage ..... 83
  - HPE Smart IO ..... 84
  - HPE Networking ..... 86
  - HPE I/O Expansion options ..... 89
  - HPE Computation and graphics accelerator ..... 90
  - HPE Graphic cable kits ..... 91

HPE PCIe Workload accelerator..... 91
HPE Cooling options..... 92
HPE Power supplies.....92
HPE iLO Advanced..... 93
HPE Converged infrastructure management software..... 94
HPE Security.....95
HPE Smart array controllers.....96
Boot device.....97
HPE Cables.....97
HPE Disk-Based backup..... 98
Rail kits.....98
HPE USB and SD options ..... 99
HPE Support services.....100
HPE Unique options..... 101
Software Compatibility.....107
OS Compatibility.....107
Software Compatibility..... 108
Useful Links..... 108

# Summary

**Subtopics**

**Product description**
**What's new**

# Product description



**The HPE ProLiant DL385 Gen10 Plus Server is redefining price/performance with the new math for virtualized compute. Powered by the latest AMD EPYC 7002 Series Processors , the HPE ProLiant DL385 Gen10 Plus Server offers greater processing power, faster memory speeds up to 3200 MT/s. and increased data transfer rates with PCIe Gen4 capabilities. This 2P, 2U server has been designed with flexibility while delivering a high core count and large memory footprint. Choose this purpose-built platform for virtualization, High Performance Compute and memory centric workloads.**

# What's new

- Supports the latest AMD EPYC 7002 Series processor with double the core density compared to the previous generation and increased memory speeds up to 3200 MT/s.
- Support for PCIe Gen4, resulting in improved networking speeds.

- Support for OCP Network Adapters.
- New SATA Read Intensive SSD drives.
- New NVMe Read Intensive and Mixed Use SSD drives.
- Support for PCIe Smart Array controllers for internal and external drives.
- **Click this link to visit European Union (EU) Lot 9 regulation for more information**.

# Standard Models

**Subtopics**


**New RoHS compliant part numbers**
**Configurable models**
**Pre-Configured models**


# New RoHS compliant part numbers

To find the latest RoHS compliance information, please use the HPE PartSurfer **Click here to visit HPE PartSurfer website**. and click on one of the linked model numbers. When locating RoHS information in PartSurfer, you can use the option part number for the components, the sales order number for a system that the component is used in, or the spare part number for a specific part. You can find the sales order numbers and option part numbers in the Product QuickSpecs.

# Configurable models

| Description | Model Number |
|---|---|
| HPE ProLiant DL385 Gen10 Plus 8 SFF Configure-To-Order (CTO) Server | P14278-B21<br>**Click here to obtain parts list for this model**. |
| HPE ProLiant DL385 Gen10 Plus 12 LFF CTO Server | P14280-B21 |

| Description | Model Number |
|---|---|
| | **Click here to obtain parts list for this model**. |
| HPE ProLiant DL385 Gen10 Plus 8 LFF CTO Server | P14281-B21<br>**Click here to obtain parts list for this model**. |
| HPE ProLiant DL385 Gen10 Plus 24 SFF CTO Server | P14279-B21<br>**Click here to obtain parts list for this model**. |

## Pre-Configured models

| Description | Model Number | Country Code Key |
|---|---|---|
| **Entry models** | | |
| HPE ProLiant DL385 Gen10 Plus 7262 3.2 GHz 8-core 1 P 16GB-R 8LFF 500 W PS Server | P07594-xx1<br>**Click here to obtain the parts list of this model**. | • xx1 = B21 - Worldwide<br>• xx1 = 291 - Japan |
| HPE ProLiant DL385 Gen10 Plus 7262 3.2 GHz 8-core 1 P 16GB-R 8SFF 500 W PS Server | P07595-xx1<br>**Click here to obtain the parts list of this model**. | |
| **Base models** | | |
| HPE ProLiant DL385 Gen10 Plus 7302 3.0 GHz 16-core 1 P 32GB-R 8SFF 500 W PS Server | P07596-xx1<br>**Click here to obtain the parts list of this model**. | |
| HPE ProLiant DL385 Gen10 Plus 7702 2.0 GHz 64-core 1 P 32GB-2R 24SFF 800 W PS Server | P07597-xx1<br>**Click here to obtain the parts list of this model**. | |

| Description | Model Number | Country Code Key |
|---|---|---|
| HPE DL385 Gen10+ 7402 32 G 16SFF NVMe Svr (BTO SKU ) | P07598-xx1<br>**Click here to obtain the parts list of this model**. | |
| HPE ProLiant DL385 Gen10 Plus 8LFF Configure-to-order Server | P14281-B21<br>**Click here to obtain the parts list of this model**. | |

**NOTE**

The B21 WW SKU is to be ordered in all countries other than Japan.

## Product features

| Feature | Description |
|---|---|
| **Form factor** | 2U Rack |
| **Chassis types** [1] | • 8 Small Form Factor (SFF) with optional universal media bay, and optional SFF or NVMe drive bay options<br>• 24-SFF Bay with 4 SFF rear drive bay option to total 28 SFF drives<br>• 8 Large Form Factor (LFF) with universal media bay, and optional SFF or NVMe drive bay options<br>• 12-LFF with optional 4-LFF mid-plane and optional 4-LFF + 2-SFF rear drive bay to total 20-LFF drives + 2-SFF drives |
| **System fans** | Standard - fan types included |

| Feature | Description |
|---|---|
| | • On SFF Chassis only, 1P models ship with 4 standard fans. The second processor option kit contains 2 additional fans.<br>• The 12-LFF and 24-SFF chassis ship with 6 Max performance fans as standard.<br>• The 8-LFF chassis ships with 6 standard fans as standard.<br>• Max performance fan kit is available to meet ambient temperature environments.<br>• Max performance fan kits are required for rear drives, or >180 W Processors SKUs, or if high performance NVMe drive being used. |
| **Processors** [2] | |

| AMD EPYC processor | Cores | Base frequency | Max frequency | Max memory | Wattage | Cache | Memory |
|---|---|---|---|---|---|---|---|
| EPYC 7F72 | 24 | 3.3 GHz | 3.6 GHz | 4TB | 240 W | 192 MB | 3200 MT/s |
| EPYC 7F52 | 16 | 3.5 GHz | 3.8 GHz | 4TB | 225 W | 256 MB | 3200 MT/s |
| EPYC 7F32 | 8 | 3.6 GHz | 3.8 GHz | 4TB | 180 W | 128 MB | 3200 MT/s |
| EPYC 7742 | 64 | 2.25 GHz | 3.4 GHz | 4TB | 225 W | 256 MB | 3200 MT/s |
| EPYC 7702 | 64 | 2.0 GHz | 3.35 GHz | 4TB | 200 W | 256 MB | 3200 MT/s |

| Feature | Description | | | | | | | |
|---|---|---|---|---|---|---|---|---|
| | AMD EPYC processor | Cores | Base frequency | Max frequency | Max memory | Wattage | Cache | Memory |
| | EPYC 7662 | 64 | 2.0 GHz | 3.3 GHz | 4TB | 225 W | 256 MB | 3200 MT/s |
| | EPYC 7642 | 48 | 2.3 GHz | 3.3 GHz | 4TB | 256 W | 192 MB | 3200 MT/s |
| | EPYC 7552 | 48 | 2.2 GHz | 3.3 GHz | 4TB | 200 W | 192 MB | 3200 MT/s |
| | EPYC 7502 | 32 | 2.5 GHz | 3.35 GHz | 4TB | 180 W | 128 MB | 3200 MT/s |
| | EPYC 7542 | 32 | 2.9 GHz | 3.4 GHz | 4TB | 225 W | 128 MB | 3200 MT/s |
| | EPYC 7532 | 32 | 2.3 GHz | 3.2 GHz | 4TB | 200 W | 256 MB | 3200 MT/s |
| | EPYC 7452 | 32 | 2.35 GHz | 3.35 GHz | 4TB | 155 W | 128 MB | 3200 MT/s |
| | EPYC 7402 | 24 | 2.8 GHz | 3.35 GHz | 4TB | 180 W | 128 MB | 3200 MT/s |
| | EPYC 7352 | 24 | 2.3 GHz | 3.2 GHz | 4TB | 155 W | 128 MB | 3200 MT/s |
| | EPYC 7282 | 16 | 2.8 GHz | 3.2 GHz | 4TB | 120 W | 64 MB | 3200 MT/s |

| Feature | Description |
|---|---|

| AMD EPYC processor | Cores | Base frequency | Max frequency | Max memory | Wattage | Cache | Memory |
|---|---|---|---|---|---|---|---|
| EPYC 7302 | 16 | 3.0 GHz | 3.3 GHz | 4TB | 155 W | 128 MB | 3200 MT/s |
| EPYC 7272 | 12 | 2.9 GHz | 3.2 GHz | 4TB | 120 W | 64 MB | 3200 MT/s |
| EPYC 7262 | 8 | 3.2 GHz | 3.4 GHz | 4TB | 155 W | 128 MB | 3200 MT/s |
| EPYC 7252 | 8 | 3.1 GHz | 3.2 GHz | 4TB | 120 W | 64 MB | 3200 MT/s |

| Feature | Description |
|---|---|
| **Chipset** | No chipset - System on Chip (SoC) design |
| **On system management chipset** | HPE iLO 5 ASIC<br>**Click here to access the iLO QuickSpecs for more information**. |
| **Memory** [3] | **Type:**<br>HPE DDR4 SmartMemory, Registered (RDIMM) |
| | **Dual In-Line Memory Module (DIMM) Slots available:**<br>32 - 16 DIMM Slots per processor, 8 channels per processor, 2 DIMMs per channel |
| | **Maximum capacity (RDIMM)**<br>2.0TB - 32 x 64GB RDIMM at 3200 MHz |
| **Expansion slots** [4] | **Primary riser**Slots #TechnologyBus widthConnector widthSlot form factorNotes**Primary riser1**1PCIe 4.0X8X16Full-Height, full-length slotProc 12PCIe 4.0X16X16Full-Height, f |

| Feature | Description |
|---|---|
| | ull-length slotProc 13PCIe 4.0X8X16Full-Height, full-length slotProc 1**Primary riser2**1PCIe 4.0X16X16Full-Height, full-length slotProc 12PCIe 4.0X16X16Full-Height, full-length slotProc 13NANANANANA**Primary riser3**1NANANANANA1PCIe 4.0X16X16Full-Height, full-length slotProc 12PCIe 4.0X16X16Full-Height, full-length slotProc 13PCIe 4.0X16X16Full-Height, half-length slotProc 1 |

**Secondary riser**

| Slots # | Technology | Bus width | Connector width | Slot form factor | Notes |
|---|---|---|---|---|---|
| **Secondary riser1** | | | | | |
| 4 | PCIe 4.0 | X8 | X16 | Full-Height, half-length slot | Proc 2 |
| 5 | PCIe 4.0 | X16 | X16 | Full-Height, half-length slot | Proc 2 |
| 6 | PCIe 4.0 | X8 | X16 | Full-Height, half-length slot | Proc 2 |
| **Secondary riser2** | | | | | |
| 4 | PCIe 4.0 | X16 | X16 | Full-Height, full-length slot | Proc 2 |
| 5 | PCIe 4.0 | X16 | X16 | Full-Height, full-le | Proc 2 |

| Feature | Description |
|---|---|

| Slots # | Technology | Bus width | Connector width | Slot form factor | Notes |
|---|---|---|---|---|---|
| | | | | ngth slot | |
| 6 | NA | NA | NA | NA | NA |
| **Secondary riser3** | | | | | |
| 4 | NA | NA | NA | NA | NA |
| 4 | PCIe 4.0 | X16 | X16 | Full-Height, full-length slot | Proc 2 |
| 5 | PCIe 4.0 | X16 | X16 | Full-Height, full-length slot | Proc 2 |
| 6 | PCIe 4.0 | X16 | X16 | Full-Height, full-length slot | Proc 2 |

**Tertiary riser**

| Slots # | Technology | Bus width | Connector width | Slot form factor | Notes |
|---|---|---|---|---|---|
| **Tertiary riser1** | | | | | |
| 7 | PCIe 4.0 | X16 | X16 | Full-Height, full-length slot | Proc 2 |
| 8 | NA | NA | NA | NA | NA |

| Feature | Description | | | | | |
|---|---|---|---|---|---|---|
| | **Slots #** | **Technology** | **Bus width** | **Connector width** | **Slot form factor** | **Notes** |
| | **Tertiary riser2** | | | | | |
| | 7 | PCIe 4.0 | X8 | X16 | Full-Height, full-length slot | Proc 2 |
| | 8 | PCIe 4.0 | X8 | X16 | Full-Height, full-length slot | Proc 2 |
| **Storage controllers** | **Essential RAID controller**<br>• HPE Smart Array E208i-a SR Gen10 controller<br>• HPE Smart Array E208i-p SR Gen10 controller<br>• HPE Smart Array E208e-p SR Gen10 controller<br>**Performance RAID controller**<br>• HPE Smart Array P408i-a SR Gen10 controller<br>• HPE Smart Array P408i-p SR Gen10 controller<br>• HPE Smart Array P408e-p SR Gen10 controller<br>• HPE Smart Array P816i-a SR Gen10 controller | | | | | |
| **Internal storage devices** | **Optical drive**<br>• Ships standard in performance models | | | | | |

| Feature | Description |
|---|---|
| | • Optional: DVD-ROM, DVD-RW<br>**Hard drives**<br>• None ship standard |
| **Maximum internal storage** | |

| Internal storage | Capacity | Configuration |
|---|---|---|
| Hot-Plug SFF SAS | 67.2TB | 24+4 x 2.4TB (With optional rear SFF drive cage) |
| Hot-Plug SFF SATA | 56.0TB | 24+4 x 2TB ( With optional rear SFF drive cage) |
| Hot-Plug LFF SAS | 310.6TB | 12+4+4 x 14TB + 2 x 15.3TB (With optional mid –tray and rear LFF drive cage, plus 2-SFF SSD rear) |
| Hot-Plug LFF SATA | 310.6TB | 12+4+4 x 14TB + 2 x 15.3TB (With optional mid –tray and rear LFF drive cage, plus 2-SFF SSD rear) |
| Hot-Plug SFF SAS SSD | 428.4TB | 24+4 x 15.3TB (With optional rear SFF drive cage) |
| Hot-Plug LFF SATA SSD | 49.8TB | 12+4+4 x 0.96TB + 2 x 15.3TB (With optional mid –tray and rear LFF drive ca |

| Feature | Description | | |
|---|---|---|---|
| | **Internal storage** | **Capacity** | **Configuration** |
| | | | ge, plus 2-SFF SSD rear) |
| | Hot-Plug SFF SATA SSD | 215TB | 24+4 x 7.68TB (With optional 2SFF drive cage) |
| | Hot-Plug SFF NVMe PCIe SSD | 368.64TB NVMe | 24 x 15.36TB NVMe |
| **Power supply** | • HPE 500 W Flex slot platinum hot-plug low halogen power supply kit<br>• HPE 800 W Flex slot Platinum hot-plug low halogen power supply kit<br>• HPE 800 W Flex slot Titanium hot-plug low halogen power supply kit<br>• HPE 800 W Flex slot Universal hot-plug low halogen power supply kit<br>• HPE 800 W Flex slot 48 V dc hot-plug low halogen power supply kit<br>• HPE 1600 W Flex slot platinum hot-plug low halogen power supply kit | | |
| **Interfaces** | **Serial** | **Optional, rear** | |
| | **Display port** | 1 standard on both SFF & LFF chassis, rear. | |
| | **VGA Port** | Optional via Universal Media Bay, P14609-B21. | |

| Feature | Description | |
|---|---|---|
| | **Serial** | **Optional, rear** |
| | **Network ports** | None. Choice of OCP or stand up card |
| | **HPE iLO Remote management network port** | 1Gb Dedicated |
| | **Front iLO service port** | 1 Standard (Not available on 12-LFF chassis or when SID is ordered, note iLO dongle required, 880123-B21) |
| | **USB 3.0** | Up to 7 total: 1 front, 2 rear, 2 internal (secure), 2 optional USB 3.0 front via Universal Media Bay, or standard on 8-LFF chassis |
| | **SID (Systems Insight Display)** | Optional |
| **Industry standard compliance** | • ACPI 6.1 Compliant<br>• PCIe 4.0 Compliant<br>• WOL Support<br>• Microsoft Logo certifications<br>• PXE Support<br>• VGA/Display Port<br>• USB 3.0 Compliant (internal)<br>• USB 2.0 Compliant (external ports)<br>• Energy Star<br>• SMBIOS 3.1<br>• UEFI 2.6 | |

| Feature | Description |
|---|---|
| | • Redfish API<br>• IPMI 2.0<br>• Secure Digital 2.0<br>• Advanced Encryption Standard (AES)<br>• Triple Data Encryption Standard (3DES)<br>• SNMP v3<br>• TLS 1.2<br>• DMTF Systems Management Architectu re for Server Hardware Command Line Protocol (SMASH CLP)<br>• Active Directory v1.0<br>• ASHRAE A3/A4<br>For additional technical thermal details regarding ambient temperatures, humi dity and features support,<br>**Click here to access the Hewlett Pac kard Enterprise Information Library**.<br>• UEFI (Unified Extensible Firmware Inte rface Forum) |
| **Graphics** | **Integrated video standard**<br>• Video modes up to 1920 x 1200 at 60 H z (32 bpp)<br>• 16MB Video memory<br>**HPE iLO 5 on system management memo ry**<br>• 32MB Flash<br>• 4Gb DDR 3 with ECC protection |
| **HPE Server UEFI/Legacy ROM** | Unified Extensible Firmware Interface (UEFI ) is an industry standard that provides bett er manageability and more secured config uration than the legacy ROM while interacti ng with server at boot time. |

| Feature | Description |
| --- | --- |
| | **UEFI enables numerous new capabilities specific to HPE ProLiant servers such as:**<br>• Secure Boot and Secure Start enable fo r enhanced security<br>• Operating system specific functionality<br>• Support for > 2.2TB (Using GPT) boot dr ives<br>• USB 3.0 Stack<br>**HPE Server UEFI/Legacy ROM**<br>• Embedded UEFI Shell<br>• Mass Configuration Deployment Tool us ing iLO RESTful API that is Redfish API C onformant<br>• PXE boot support for IPv6 networks<br>**Workload Profiles for simple performanc e optimization**<br>UEFI Boot Mode only:<br>• TPM 2.0 Support<br>• NVMe Boot Support<br>• iSCSI Software Initiator Support<br>• HTTP/HTTPs Boot support as a PXE alter native<br>• Boot support for option cards that only support a UEFI option ROM |
| **Embedded management** | • HPE Integrated Lights-Out (HPE iLO)<br>• Intelligent Provisioning<br>• iLO RESTful API |
| **Security** | • UEFI Secure Boot and Secure Start sup port<br>• Immutable Silicon Root of Trust |

| Feature | Description |
| --- | --- |
| | • FIPS 140-2 validation (iLO 5 certification in progress)<br>• Common Criteria certification (iLO 5 ce rtification in progress)<br>• Configurable for PCI DSS compliance<br>• Advanced Encryption Standard (AES) a nd Triple Data Encryption Standard (3D ES) on browser.<br>• Support for Commercial National Secur ity Algorithms (CNSA)<br>• Tamper-free updates – components digi tally signed and verified<br>• Secure Recovery – recover critical firm ware to known good state on detection of compromised firmware<br>• Ability to rollback firmware.<br>• Secure erase of NAND/User data.<br>• TPM (Trusted Platform Module) 2.0 opti on<br>• Chassis Intrusion detection option. |
| **Server management** | • HPE iLO Advanced<br>• HPE iLO Advanced Premium Security E dition<br>• HPE OneView Advanced<br>• HPE InfoSight for Servers<br>• HPE Insight Cluster Management Utility (CMU)<br>• Rack and Power Infrastructure<br>• One Config Simple (SCE) |

**NOTE**

1.

| Feature | Description |
|---|---|

- The 4-LFF rear drive box will consume space for the primary and se condary riser.
- The 8 and 12-LFF chassis also supports the 2-SFF rear drive box whic h allows for the user to attach a secondary or tertiary riser.
- The 8 NVMe drive option ( P14578-B21) can only be leveraged in the SFF chassis and replaces Box 1, 2 or 3.
- The Universal Media Bay (P14609-B21) not available with the LFF cha ssis or the 24-SFF front, and can only be populated in Box 1
- The 8 NVMe SFF can be upgraded with additional 8 NVMe SFF drive box to total 16-SFF NVMe drives.
- The 8-LFF chassis cannot be upgraded to 12-LFF front in the field.
- 12-LFF or more drives require Max performance fan kit (P14608-B21).
- The 8-LFF chassis ships with 6-standard fans.
- CPU selection is limited 200 W or lower with 4-LFF mid-tray selecte d & DIMM blanks populate empty DIMM slots.
- If CPU power is >180 W then it is required to use 2U Performance H eat sink.

2. All AMD EPYC processors can support up to 4TB of memory each.

   **Click here for more information on AMD EPYC processors**.

3.

   - The maximum memory speed is limited by the processor selection.
   - When 2 DIMMs are populated per channel, memory speed drops to 2933 MT/S.

4.

   - Bus width indicates the number of physical electrical lanes running to the connector.
   - There are 3 types of risers supported on Primary and Secondary slo ts.
   - There are 2 types of risers support on Tertiary Slot

| Feature | Description |
|---|---|
| | • Default Slot1 on the Primary Riser3 is empty and not available.It req uires P14600-B21 in conjunction with the Primary Riser3 to add addi tional x16 PCIe Gen4 in slot1.<br>• Default Slot4 on the Secondary Riser3 is empty and not available.It requires P14600-B21 in conjunction with the Secondary Riser3 to ad d additional x16 PCIe Gen4 in slot4. |

## Physical specifications

| Specification | Description |
|---|---|
| **Dimensions** | **Small Form Factor (SFF) drives:**8.75 x 4 4.54 x 71.1 cm (3.44 x 17.54 x 28 in) |
| | **Large Form Factor (LFF) drives:** 8.75 x 4 4.54 x 74.9 cm (3.44 x 17.54 x 29.5 in) |
| **Weight** (Approximate) | **SFF:**<br>**Minimum:** 15.1 kg / 33.25 lb with 1 hard dri ve<br>**Maximum:** 19.7 kg / 43.50 lb with 24 hard d rives<br>Minimum: 8 SFF chassis with 1 x SFF HDD a nd 7 HDD blanks, 2 x Drive Bay blanks, 1 x p rocessor including standard heatsink, 1 x p ower supply (Plus blank), 1 x Smart Array, 1 x Riser installed, cables |
| | **LFF:**<br>**Maximum:** 24.7 kg / 54.5 lb with 12 hard dri ves<br>**Minimum:** 17.3 kg / 38.25 lb with 1 hard dri ve |

| Specification | Description |
|---|---|
| | Maximum: 12 LFF hard drives (No rear dri ves), 2 x processors, 2 x power supplies, 1 x Smart Array, 2 x Risers installed |

## Environmental specifications

| Specification | Description | |
|---|---|---|
| **System inlet temperat ure** | **Standard operating support** | • **10° to 35°C (50° to 95°F) at sea leve l with an altitude derating of 1.0°C p er every 305 m (1.8°F per every 100 0 ft) above sea level to a maximum o f 3050 m (10,000 ft), no direct susta ined sunlight**<br>• **Maximum rate of change is 20°C/hr (36°F/hr).**<br>• **The upper limit and rate of change may be limited by the type and num ber of options installed**<br>• **System performance during standa rd operating support may be reduce d if operating with a fan fault or ab ove 30°C (86°F)** |
| | **Extended ambient operating support** | • For approved hardware configuratio ns, the supported system inlet rang e is extended to be: 5° to 10°C (41° t o 50°F) and 35° to 40°C (95° to 104° F) at sea level with an altitude derati ng of 1.0°C per every 175 m (1.8°F per every 574 ft) above 900 m (2953 ft) t o a maximum of 3050 m (10,000 ft) |

| Specification | Description | |
|---|---|---|
| | **Standard operating support** | • **10° to 35°C (50° to 95°F) at sea level with an altitude derating of 1.0°C per every 305 m (1.8°F per every 1000 ft) above sea level to a maximum of 3050 m (10,000 ft), no direct sustained sunlight**<br>• **Maximum rate of change is 20°C/hr (36°F/hr).**<br>• **The upper limit and rate of change may be limited by the type and number of options installed**<br>• **System performance during standard operating support may be reduced if operating with a fan fault or above 30°C (86°F)** |
| | | • For approved hardware configurations, the supported system inlet range is extended to be: 40° to 45°C (104° to 113°F) at sea level with an altitude derating of 1.0°C per every 125 m (1.8°F per every 410 ft) above 900 m (2953 ft) to a maximum of 3050 m (10,000 ft)<br>• System performance may be reduced if operating in the extended ambient operating range or with a fan fault |
| | **Non-operating** | -30° to 60°C (-22° to 140°F). Maximum rate of change is 20°C/hr (36°F/hr). |

| Specification | Description | | |
|---|---|---|---|
| **Relative humidity** | | | |
| | **Operating humidity** | **8% to 90% - Relative humidity (Rh), 28° C maximum wet bulb temperature, non-condensing.** | |
| | **Non-Operating humidity (Non-condensing)** | 5 to 95% relative humidity (Rh), 38.7°C (101.7°F) maximum wet bulb temperature, non-condensing. | |
| **Altitude** | | | |
| | **Operating** | **3050 m (10,000 ft). This value may be limited by the type and number of options installed. Maximum allowable altitude change rate is 457 m/min (1500 ft/min)** | |
| | **Non-operating** | 9144 m (30,000 ft). Maximum allowable altitude change rate is 457 m/min (1500 ft/min) | |
| **RTC Accuracy** | 50 ppm | | |
| **Acoustic noise** | | | |
| | **Configuration** | **Entry** | **Base** | **Performance** |
| | **Idle** | | | |
| | LWAd | 5.0 B | 5.2 B | 5.7 B |
| | LpAm | 32 dBA | 34 dBA | 44 dBA |
| | **Operating** | | | |
| | LWAd | 5.0 B | 5.3 B | 6.4 B |
| | LpAm | 32 dBA | 37 dBA | 48 dBA |

# Electrical specifications

| Specification | Description |
|---|---|
| **Rated line voltage** | 100 to 120 V ac<br>200 to 240 V ac |
| **BTU Rating**(Maximum) | **800 W Power supply:**<br>• 3207 BTU/hr (at 100 V ac)<br>• 3071 BTU/hr (at 200 V ac)<br>• 3112 BTU/hr (at 240 V ac) for China Only<br>**500 W Power supply:**<br>• 1979 BTU/hr (at 100 V ac)<br>• 1911 BTU/hr (at 200 V ac)<br>• 1965 BTU/hr (at 240 V ac) for China Onl y |
| **Power supply output**(Per power supply) | **Rated Steady-State power:**<br>• **1400 W Power supply:**<br>◦ 1400 W (at 240 V ac)<br>• **800 W Power supply**<br>◦ 800 W (at 100 V ac)<br>◦ 800 W (at 240 V ac)<br>◦ 800 W (at 240 V ac) input for China only<br>• **500 W Power supply**<br>◦ 500 W (at 100 V ac)<br>◦ 500 W (at 240 V ac)<br>◦ 500 W (at 240 V ac) input for China only<br>**Maximum peak power:**<br>• **1400 W Power supply:** |

| Specification | Description |
| --- | --- |
| | ◦ 1400 W (at 200 to 240 1V ac)<br>◦ 1400 W (at 240 V ac) input for China only<br>• **800 W Power supply:**<br>◦ 800 W (at 100 to 127 V ac)<br>◦ 800 W (at 200 to 240 1V ac)<br>◦ 800 W (at 240 V ac) input for China only<br>• **500 W Power supply**<br>◦ 500 W (at 100 to 127 V ac)<br>◦ 500 W (at 200 to 240 V ac)<br>◦ 500 W (at 240 V ac) input for China only |

## Safety certifications

| Specification | Description |
| --- | --- |
| Emissions classification (EMC) | To view the regulatory information, view th e Safety and Compliance Information for S erver, Storage, Power, Networking, and Rac k Products, available at the Hewlett Packa rd Enterprise Support Center: **Hewlett Pac kard Enterprise Support Center for Enter prise Safety and Compliance**. |

## Spare Parts

**Subtopics**

**New model specific parts lists**
**Mechanical components**
**System components**
**Server options**

# New model specific parts lists

**IMPORTANT**: To obtain current part number information for a specific product model, use the Standard Models page for this product family.

- The product Standard Models page now links the model Stock Keeping Unit (SKU) numbers to the spare parts list for each model found on the **HPE PartSurfer website**. (To report missing or incorrect parts information in PartSurfer, please use the "Contact us" and "Missing or incorrect data" links within the PartSurfer website utility)
- To look up RoHS-compliant information in PartSurfer, use the component's option part number or the sales order number for a system in which the component is used (Available in the QuickSpecs or Standard Models page).

# Mechanical components

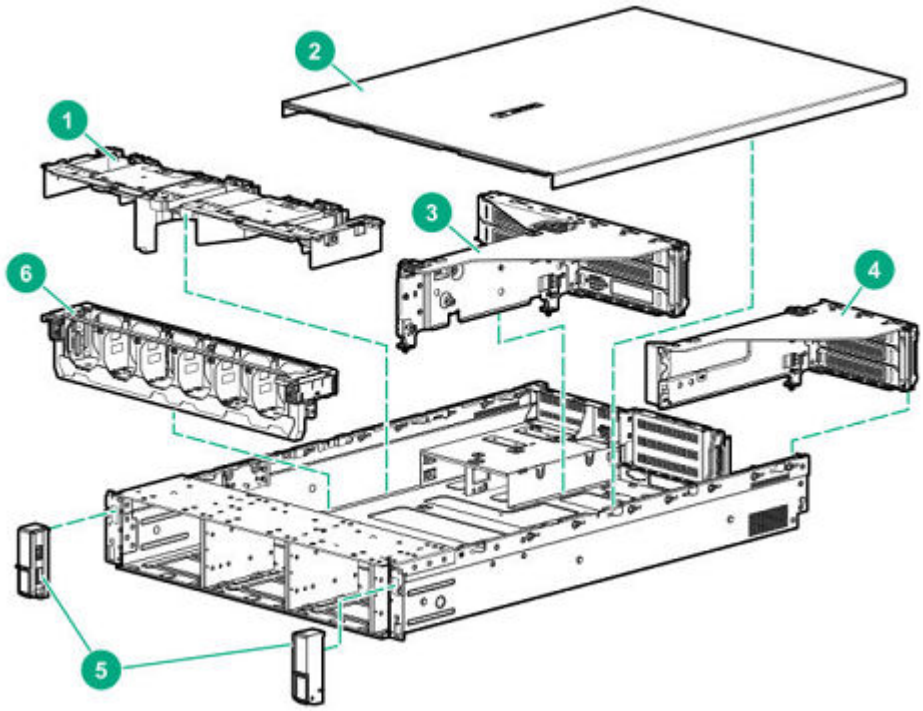


| Item | Description | Spare Part Number |
|---|---|---|
| 1 | **Air baffle** | |
| | Baffle, system, 2U | P24140-001 |
| 2 | **Access panel** | |
| | Top cover, Small Form Factor (SFF), with label | P23976-001 |
| | Top cover, Large Form Factor (LFF), with label | P23975-001 |
| 3 | **Secondary and tertiary PCI riser cage** | |
| | RSR CAGE,BFLY MOD,TER,2U | P24030-001 |
| 4 | **Primary PCI riser cage** | |

| Item | Description | Spare Part Number |
|---|---|---|
| | Cage, PCI Riser, 2 U | P24028-001 |
| 5 | **Chassis ear** | |
| | Ear SFF/LFF-DL385 Right/Left+Power Cable | P24141-001 |
| 6 | **Fan cage** | |
| | Fan cage 2U | P24029-001 |
| 7 | **Dual In-Line Memory Module (DIMM) guard** | |
| | Guard, DIMM, 2U, Left/Right | P24307-001 |
| | **2U Bezel** | |
| | 2U Bezel | 875065-001 |
| | **Rail kit** | |
| | Rack mount kit, 2U, easy install, SFF | P24098-001 |
| | Rack mount kit, 2U,easy install, LFF | P24099-001 |
| | Cable arm, 2U | P24100-001 |
| | **Fan blanks, energy pack latch, and retention clips** | |
| | Blank kit includes - Fan and latch M.cell + PCIe/T. RTN Rs | 875066-001 |
| | **Optical drive blank** | |
| | Optical drive blank (Cover) - To fill a | 707300-001 |

| Item | Description | Spare Part Number |
|---|---|---|
| | n empty optical drive bay | |
| | **Miscellaneous** | |
| | Miscellaneous blanks kit front | 875069-001 |
| | Miscellaneous blanks kit rear | P24101-001 |
| | Blank, Quad NIC | P19929-001 |
| | Blank kit includes - fan and latch M.cell + PCIe/T. RTNRs | 875066-001 |
| | PCI CPU2 Blanks kit | 878510-001 |

**NOTE**

Item 7 not shown in the image

## System components

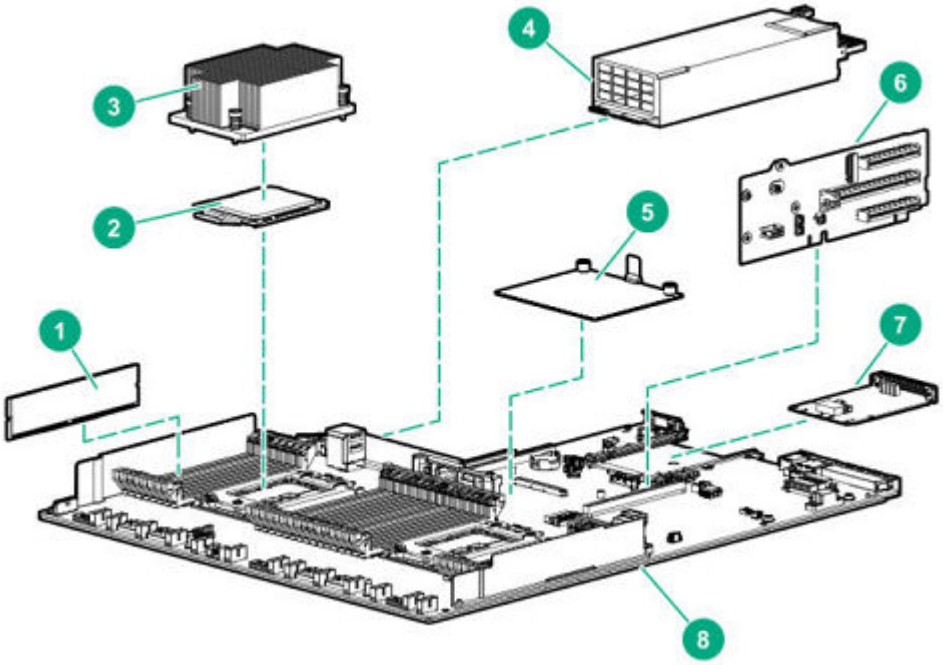


| Item | Description | Spare Part Number |
|---|---|---|
| 1 | **DIMM** | |
| | **2933 MT/s DIMMs** | |
| | HPE 8GB (1 x 8GB) Single rank x8 DDR4-2933 CAS-21-21-21 registered smart memory kit | P19255-001 |
| | HPE 16GB (1 x 16GB) Dual Rank x8 DDR4-2933 CAS-21-21-21 registered smart memory kit | P19253-001 |
| | DIMM,16GB, 2G x 4 | P19254-001 |
| | DIMM,32GB, 2G x 4 | P19252-001 |
| | HPE 64GB (1 x 64GB) Quad rank x4 DDR4-2933 CAS-21-21-21 load reduced smart memory kit | P19251-001 |
| | HPE 64GB (1 x 64GB) Dual rank x4 DDR4-2933 CAS-21-21- | P19250-001 |

| Item | Description | Spare Part Number |
|---|---|---|
| | 21 registered smart memory kit | |
| | HPE 128GB (1 x 128GB) Quad rank x4 DDR4-2933 CAS-24 -21-21 load reduced smart m emory kit | P19402-001 |
| | **3200 MT/s DIMMs** | |
| | HPE 8GB (1 x 8GB) Single ra nk x8 DDR4-3200 CAS-22-2 2-22 registered smart memo ry kit | P20499-001 |
| | HPE 16GB (1 x 16GB) Dual ra nk x8 DDR4-3200 CAS-22-2 2-22 registered smart memo ry kit | P20501-001 |
| | HPE 16GB (1 x 16GB) Single rank x4 DDR4-3200 CAS-22- 22-22 registered smart mem ory kit | P20500-001 |
| | HPE 32GB (1 x 32GB) Dual R ank x4 DDR4-3200 CAS-22-2 2-22 registered smart memo ry kit | P20503-001 |
| | HPE 32GB (1 x 32GB) Dual R ank x8 DDR4-3200 CAS-22-2 2-22 registered smart memo ry kit | P20502-001 |
| | DIMM, 64GB PC4-3200AA- R, 4G x 4 | P20504-001 |
| | DIMM, 128GB PC4-3200AA- L, 4G x 4 | P20505-001 |
| | DIMM, 256GB PC4-3200AA- L, 4G x 4 | P20506-001 |
| 2 | **AMD EPYC 7xx2 Processor** | |
| | AMD EPYC 7742 v4 Sixty Fo ur-Core 64-bit processor - 2. 25 GHz (256MB L3 cache, 2 | P23682-001 |

| Item | Description | Spare Part Number |
|---|---|---|
| | 25 W Thermal Design Power (TDP)) | |
| | AMD EPYC 7702 64 Core Processor - 2.0 GHz (Socket count: 2P, 128 threads, 256MB L3 cache, 200 W TDP) | P17332-001 |
| | Rome EPYC 7662/2.00G,64C, 225 W | P25584-001 |
| | AMD EPYC 7642 v4 Forty Eight-Core 64-bit processor - 2.3 GHz (256MB L3 cache, 225 W TDP) | P23683-001 |
| | AMD EPYC 7552 v4 Forty Eight-Core 64-bit processor - 2.2 GHz (192MB L3 cache, 200 W TDP) | P21963-001 |
| | AMD EPYC 7542 v4 Thirty Two-Core 64-bit processor - 2.9 GHz (128MB L3 cache, 225 W TDP) | P23684-001 |
| | AMD EPYC 7532/2.4G,32C,200W | P25585-001 |
| | AMD EPYC 7502 32 Core Processor - 2.5 GHz (Socket count: 2P, 64 threads, 128MB L3 cache, 180 W TDP) | P17334-001 |
| | AMD EPYC 7452 32 Core Processor - 2.35 GHz (Socket count: 2P, 64 threads, 128MB L3 cache, 155 W TDP) | P17338-001 |
| | AMD EPYC 7402 24 Core Processor - 2.8 GHz (Socket count: 2P, 48 threads, 128MB L3 cache, 180 W TDP) | P17336-001 |
| | AMD EPYC 7352 v4 Twenty Four-Core 64-bit processor - 2.30 GHz (123MB L3 cache, 155 W TDP) | P21227-001 |

| Item | Description | Spare Part Number |
|---|---|---|
| | AMD EPYC 7302 16 Core Processor - 3.0 GHz (Socket count: 2P, 32 threads, 128MB L3 cache, 155 W TDP) | P17339-001 |
| | AMD EPYC 7282 v4 Sixteen-Core 64-bit processor - 2.80 GHz (64MB L3 cache, 120 W TDP) | P23685-001 |
| | AMD EPYC 7272 v4 Eight-Core 64-bit processor - 2.9 GHz (64MB L3 cache, 120 W TDP) | P23686-001 |
| | AMD EPYC 7262 8 Core Processor - 3.2 GHz (Socket count: 2P, 16 threads, 128MB L3 cache, 155 W TDP) | P17341-001 |
| | AMD EPYC 7252 v4 Eight-Core 64-bit processor - 3.10 GHz (64MB L3 cache, 120 W TDP, -2) | P23793-001 |
| 3 | **Heatsink** | |
| | Standard heatsink 2U | P00249-001 |
| | Generic, H/S,1U | P24556-001 |
| | HPE DL38X Gen10 Plus high performance heat sink kit | P22547-001 |
| 4 | **Power supply** | |
| | 500 W Flexible slot platinum hot-plug low Halogen power supply kit, 94% efficiency - Mixing of power supplies in the same server is not supported, must be the same spare part number | 866729-001 |
| | 800 W Flexible slot universal hot-plug low halogen power supply kit - 277 V ac/380 V dc power input - 94% efficie | 866727-001 |

| Item | Description | Spare Part Number |
|---|---|---|
| | ncy- Mixing of power supplies in the same server is not supported, must be the same spare part number | |
| | HPE 800 W Flexible slot (-48) V dc hot-plug low halogen power supply kit - 94% efficiency, Mixing of power supplies in the same server is not supported, must be the same spare part number | 866728-001 |
| | 800 W AC Flexible Slot 'Platinum Plus' hot-plug low halogen power supply - Supports power discovery services (Blue plug) - 96% efficiency- Mixing of power supplies in the same server is not supported, must be the same spare part number | 866730-001 |
| | 800 W Flexible slot titanium hot-plug low halogen power supply - 200 - 240 V ac power input - 96% efficiency- Mixing of power supplies in the same server is not supported, must be the same spare part number | 866793-001 |
| | 1600 W Flexible slot platinum plus hot-plug low halogen power supply - Supports power discovery services (Blue plug) - 96% efficiency- Mixing of power supplies in the same server is not supported, must be the same spare part number | 863373-001 |
| 5 | **Smart array controller** | |
| | Smart Array E208e-p SR Controller - SAS/SATA interface, 8-SAS lanes across (no flash-backed write cache) 2 x 4 external Mini-SAS ports, 1 | 836267-001 |

| Item | Description | Spare Part Number |
|---|---|---|
| | 2 Gb/s SAS, 6 Gb/s SATA,PCI Express 3.0 x8 link, RAID 0, 1, 5, 10 | |
| | Smart Array E208i-a controller - AROC (Adaptive RAID on chip), 8-SAS lanes across 2 x4 internal Mini-SAS ports, No flash-backed write cache, 12 Gb/s SAS, 6 Gb/s SATA, RAID 0, 1, 5, 10 | 836259-001 |
| | Smart Array E208i-p SR controller - SAS/SATA interface, 8-SAS lanes across 2 x4 internal Mini-SAS ports, No flash-backed write cache, 12 Gb/s SAS, 6 Gb/s SATA,PCI Express 3.0 x8 link, RAID 0, 1, 5, 10 | 836266-001 |
| | Smart Array P408e-a SR modular controller - 12 Gb/s SAS, 6 Gb/s SATA and PCIe 3.0x8, 8-SAS 2x4 internal Mini-SAS lanes, 4GB flash-backed write cache, RAID 0, 1, 5, 6, 10, 50, 60, 1 Advanced Data Mirroring (ADM), 10 ADM | 836270-001 |
| | Smart Array P408i-a SR modular controller - 8-SAS lanes across 2 x4 internal Mini-SAS ports, 2GB flash-backed write cache, 12 Gb/s SAS, 6 Gb/s SATA, RAID 0, 1, 5, 6, 10, 50, 60, 1 ADM, 10 ADM | 836260-001 |
| | Smart Array P408i-p SR modular controller - 12 Gb/s SAS, 6 Gb/s SATA and PCIe 3.0x8, 8-SAS 2x4 internal Mini-SAS lanes, 2GB flash-backed write cache, RAID 0, 1, 5, 6, 10, 50, 60, 1 ADM, 10 ADM | 836269-001 |
| | Smart Array P816i-a SR Gen 10 - AROC (Adaptive RAID on chip), SAS/SATA interface, | 836261-001 |

| Item | Description | Spare Part Number |
|---|---|---|
| | 16-SAS lanes across 4 x4 in ternal Mini-SAS ports, 4GB f lash-backed write cache, 12 Gb/s SAS, 6 Gb/s SATA | |
| 6 | **PCI Riser board** | |
| | 3 x16,Tri-Mode riser | P24048-001 |
| | 16 Tertiary riser | P24034-001 |
| | 16 Cabled riser | P24031-001 |
| | x8, Re-Timer PCIe card | P24035-001 |
| | x16, Re-Timer PCIe card | P24041-001 |
| | 16/x16 Slot 1/2 riser | P18721-001 |
| | 16/x16 Slot 2/3 riser | P18720-001 |
| | M.2 ML/DL SATA Riser assem bly | 882359-001 |
| | 2 x16, Tertiary riser | P24038-001 |
| | AROC 1-Port NVMe adapter | P18719-001 |
| 7 | **Network adapter** | |
| | **Ethernet adapter** | |
| | HPE 1 GbE 4p BASE-T I350-T 4 Adapter | P22200-001 |
| | HPE 10 GbE 2p SFP+ QL4113 2 Adapter | P22199-001 |
| | HPE Ethernet 10Gb 4-port S FP+ QL55604 Adapter | P13346-001 |
| | Adapter NIC 2p 10 GbE Base -T QL42102 | P11688-001 |
| | HPE 10/25 GbE 2P SFP28 QL 41232 Adapter | P23451-001 |

| Item | Description | Spare Part Number |
|---|---|---|
| | HPE 10 GbE 2p SFP+ MCX4121A-XCHT Adapter | P22202-001 |
| | HPE 10/25 GbE 2p SFP28 MCX512F-ACHT Adapter | P16004-001 |
| | HPE 10/25 GbE 2p SFP28 X2522PL Adapter | P22204-001 |
| | HPE 100 GbE 2p QSFP28 MCX516A-CCHT Adapter | P22203-001 |
| | **Fibre Channel (FC) host bus adapter** | |
| | StoreFabric SN1600Q 32Gb - Single port FC adapter - 32 Gb/s interface, PCI Express 3.0 to FC | 868140-001 |
| | StoreFabric SN1600Q 32Gb - Dual port FC adapter - 32 Gb/s interface, PCI Express 3.0 to FC | 868141-001 |
| | StoreFabric SN1600E 32Gb single port FC host adapter - 32 Gb/s interface, PCI Express 3.0 to FC | 869999-001 |
| | StoreFabric SN1600E 32Gb dual port FC host adapter | 870000-001 |
| | SN1200E 16Gb single port FC host bus adapter - 16 Gb/s interface | 870001-001 |
| | SN1200E 16Gb dual port FC host bus adapter - 16 Gb/s interface | 870002-001 |
| | StoreFabric SN1100Q 16Gb single port FC host bus adapter | 863010-001 |
| | StoreFabric SN1100Q 16Gb two port FC host bus adapter - 16 Gb/s interface, PCI Express 3.0 to FC | 853011-001 |

| Item | Description | Spare Part Number |
|---|---|---|
| | **Converged Network Adapter (CNA)** | |
| | StoreFabric CN1100R - Dual port CNA,Ethernet, iSCSI, a nd FC over 10 GbE using b oth FC over Ethernet (FCoE) and Converged Enhanced Et hernet (CEE) | 706801-001 |
| | CN1200E 10Gb CNA - Dual p ort CNA, Ethernet, iSCSI, an d FC over 10 GbE using both FCoE and Converged Enhan ced Ethernet (CEE) | 767078-001 |
| | HPE StoreFabric CN1100R-T 10Gb CNA | 872605-001 |
| | StoreFabric CN1200E-T 10G b CNA - Dual port CNA, Eth ernet, iSCSI, and FC over 10 GbE using both FCoE and C onverged Enhanced Etherne t (CEE) | 827607-001 |
| | **OCP NIC 3.0** | |
| | HPE Ethernet 1Gb 4-port BASE-T I350-T4 OCP3 adapt er | P14487-001 |
| | HPE Ethernet 10Gb 2-port S FP+ QL41401 OCP3 adapter | P11586-001 |
| | HPE Ethernet 10Gb 2-port BASE-T QL41132 OCP3 adap ter | P13345-001 |
| | HPE 10 GbE 2p SFP+ MCX46 21A OCP3 adapter | P12806-001 |
| | Adapter OCP3 G4 2p 25 Gb E SFP28 MLX | P12619-001 |
| | HPE 10/25 GbE 2P SFP28 QL 41232 OCP3 adapter | P11710-001 |
| | **InfiniBand (IB) adapter** | |

| Item | Description | Spare Part Number |
|---|---|---|
| | IB, High Dynamic Range (HDR), 100/EN, 100G, 940, Quad Small Form Factor Pluggable 56 (QSFP) adapter | P08356-001 |
| | IB, HDR, 100/EN, 100G, 940, QSFP56 adapter | P08355-001 |
| | IB,HDR, EN 200G, 940 QSFP 56 adapter | P08354-001 |
| 8 | **System board** | |
| | System I/O | P18718-001 |
| 9 | **LFF front I/O board** | |
| | I/O UID LFF Module | 875088-001 |
| | **Systems insight display** | |
| | SPS-PCA, SID | P24033-001 |
| | **System battery** | |
| | Battery for real-time clock (RTC) - 3.0 V, 220 mAh, lithium coin cell, 20 mm diameter, 3.2 mm height (CR2032) | 319603-001 |

**NOTE**

Item 9 not shown in the image

# Server options

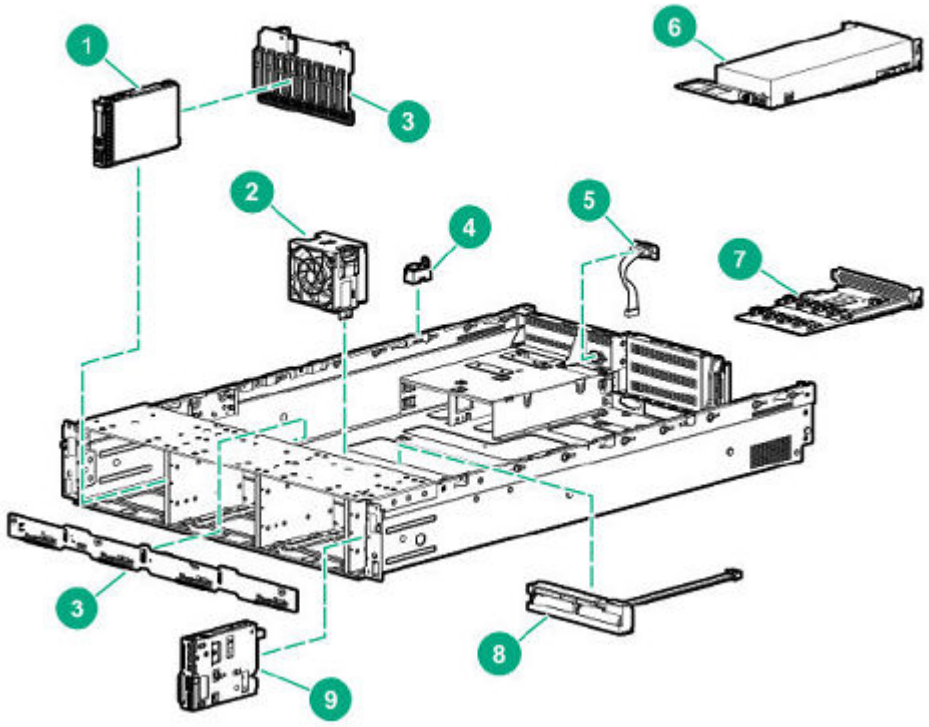


| Item | Description | Spare Part Number |
|---|---|---|
| 1 | **SFF Hard Disk Drive (HDD)** | |
| | 300GB SAS Hard drive - 12 Gb/s interface, 10,000 RPM, 2.5 in SFF, Smart Carrier (SC ), Digitally Signed (DS) firm ware | 872735-001 |
| | 300GB SAS Hard drive - 1 2 Gb/s interface, 15,000 RP M, 2.5 in SFF, enterprise dri ve,SC, DS firmware | 870792-001 |
| | 600GB SAS Hard drive - 12 Gb/s interface, 15,000 RPM, 2.5 in SFF, enterprise drive, SC, DS firmware | 870794-001 |
| | 600GB SAS Hard drive - 12 Gb/s interface, 10,000 RPM, 2.5 in SFF, SC, DS firmware | 872736-001 |
| | 900GB SAS Hard drive - 12 Gb/s interface, 15,000 RPM, | 870795-001 |

| Item | Description | Spare Part Number |
|---|---|---|
| | 2.5 in SFF, enterprise drive, SC, DS firmware | |
| | 1TB SAS Drive - 12 Gb/s transfer rate, 7,500 RPM,2.5 in SFF, Midline (MDL), SC - For use with Gen8/Gen9 or newer | 832984-001 |
| | 1TB Hot-plug SATA HDD - 7,200 RPM, 6 Gb/s transfer rate, 2.5 in SFF, MDL, SmartDrive Carrier - Not for use in MSA products | 656108-001 |
| | 1.2TB Serial Attached SCSI (SAS) hard drive - 12 Gb/s interface, 10,000 RPM, 2.5 in SFF, SC, DS firmware | 872737-001 |
| | 1.8TB Serial Attached SCSI (SAS) hard drive - 12 Gb/s interface, 10,000 RPM, 2.5 in SFF, Enterprise drive, 512e format, DS firmware | 872738-001 |
| | 2TB hot-plug SAS HDD - 12 Gb/s transfer rate, 7,200 RPM, 2.5 in SFF, MDL, 512e format, SmartDrive Carrier- For use with Gen8/Gen9 or newer | 765873-001 |
| | 2TB hot-plug SATA HDD - 6 Gb/s transfer rate, 7,200 RPM, 2.5 in SFF, MDL, 512e sector format, SmartDrive Carrier | 765869-001 |
| | 2.4TB SAS Hot-plug hard drive - 10,000 RPM, 2.5 in SFF, 12 Gb/s interface, SC, 512e format, DS Firmware | 881507-001 |
| | **LFF HDD** | |
| | 1TB SATA HDD - 6 Gb/s interface, 7,200 RPM, 3.5 in LFF, Low Profile (LP) | 862130-001 |

| Item | Description | Spare Part Number |
|---|---|---|
| | 2TB SAS Hard drive - 12 Gb/s interface, 7,200 RPM, 3.5 in LFF, MDL, low profile | 834133-001 |
| | 2TB SATA Hard drive - 6 Gb/s interface, 7,200 RPM, 3.5 in LFF, LP | 862132-001 |
| | 4TB SAS Hard drive - 12 Gb/s interface, 7,200 RPM, 3.5 in LFF, MDL, LP | 834134-001 |
| | 4TB SATA Hard drive - 6 Gb/s interface, 7,200 RPM, 3.5 in LFF, LP | 862133-001 |
| | 6TB SAS Hard drive - 12 Gb/s transfer rate interface, 7,200 RPM, 3.5 in LFF, LP, MDL, 512 e format , DS firmware | 862136-001 |
| | 6TB SATA Hard drive - 7,200 RPM, 3.5 in LFF, 6 Gb/s trans fer rate interface, LP, MDL, 5 12e format , DS | 862134-001 |
| | 8TB SAS hard drive - 12 Gb/s interface, 7,200 RPM, 3.5 in LFF, low profile carrier (LP), 512e format, DS firmware | 834132-001 |
| | 8TB SATA Hard Drive - 6 Gb/s interface, 7,200 RPM, 3.5 in LFF, LP, 512e format, reduce d depth carrier | 834131-001 |
| | 10TB SAS Hard Drive - 3.5 in LFF, 12G , High Endurance ( HE), LP, DS Firmware | P11186-001 |
| | 10TB SATA Hard Drive - 3.5 in LFF, 6G, HE, LP, DS | P11184-001 |
| | 12TB SAS, HDD (HDD) - 3.5 in LFF, 7200 rpm, LP, HE, DS Fir mware | 882398-001 |

| Item | Description | Spare Part Number |
|---|---|---|
| | 12TB SATA Hot-Plug hard drive - 7,200 RPM, 3.5 in LFF, 6 Gb/s interface, LP, Helium, DS firmware | 882401-001 |
| | 14TB Hard drive - 3.5 in LFF, 12G, HE, LP, DS Firmware | P11518-001 |
| | 14TB SATA Hard drive - 3.5 in LFF, 6G, HE, LP, DS Firmware | P11519-001 |
| | **Non-Volatile Memory express (NVMe) Solid State Drive (SSD)** | |
| | 375GB SSD - Write Intensive (WI), 2.5 in SFF, NVMe x4, Smart Carrier Non-Volatile Memory express (SCN), DS Firmware | P02559-001 |
| | 750GB SATA SSD - 2.5 in SFF, NVMe x4, WI, DS Firmware, SCN | P06979-001 |
| | 800GB SATA SSD - NVMe, Mixed Use (MU), Smart Carrier Smart Carrier (SC2), DS Firmware | P13826-001 |
| | 800GB SATA SSD - 2.5 in SFF, NVMe x4, MU, SCN, DS Firmware | P10648-001 |
| | 960GB SSD - NVMe, Read Intensive (RI), SC2, DS Firmware | P13831-001 |
| | 960GB SSD, NVMe x4, 2.5 in SFF, RI SCN, DS Firmware | P10652-001 |
| | 960GB SSD - 2.5 in SFF NVMe x4 RI, SCN, DS Firmware | P10645-001 |
| | 1.6TB SSD - NVMe, MU, SC2, DS Firmware | P13827-001 |

| Item | Description | Spare Part Number |
|---|---|---|
| | 1.6TB SSD - NVMe x4 MU, Smart Carrier NVMe, (SCN), DS Firmware | P13835-001 |
| | 1.6TB SSD - 2.5 in SFF, NVMe x4, MU, SCN, DS Firmware | P10649-001 |
| | 1.6TB SSD - NVMe x4, 2.5 in SFF, MU, SCN, DS Firmware | P10470-001 |
| | 1.6TB SSD NVMe U.3 - 2.5 in SFF, MU, SCN | P20737-001 |
| | 1.92TB SSD - NVMe, RI, SC2, DS Firmware | P13832-001 |
| | 1.92TB SSD - 2.5 in SFF NVMe x4 RI, SCN, DS Firmware | P10646-001 |
| | 1.92TB SSD, NVMe x4, 2.5 in SFF, RI SCN, DS Firmware | P10653-001 |
| | 1.92TB SSD - NVMe x4, 2.5 in SFF, SCN, DS Firmware | P10466-001 |
| | 1.92TB SSD NVMe U.3 - SFF, RI, SCN | P20735-001 |
| | 2TB SSD - NVMe x4 RI, SCN, DS Firmware | P13838-001 |
| | 3.2TB SSD - NVMe, MU, SC2, DS Firmware | P13828-001 |
| | 3.2TB SSD - NVMe x4 MU, SCN, DS Firmware | P13836-001 |
| | 3.2TB SSD - 2.5 in SFF, NVMe x4, MU, SCN, DS Firmware | P10650-001 |
| | 3.2TB SSD - NVMe x4, 2.5 in SFF, MU, SCN, DS Firmware | P10471-001 |
| | 3.2TB SSD NVMe U.3 - SFF, MU, SCN | P20738-001 |

| Item | Description | Spare Part Number |
|---|---|---|
| | 3.84TB SSD - NVMe, RI, SC2, DS Firmware | P13833-001 |
| | 3.84TB SSD, NVMe x4, 2.5 in SFF , RI SCN, DS Firmware | P10654-001 |
| | 3.84TB SSD - 2.5 in SFF NVM e x4 RI, SCN, DS Firmware | P10647-001 |
| | 3.84TB SSD - NVMe x4, 2.5 i n SFF, RI, SCN, DS Firmware | P10467-001 |
| | 3.84TB SSD NVMe U.3 - Sma rt Form Factor, RI, SCN | P20736-001 |
| | 4TB SSD - NVMe x4 RI, SCN, DS Firmware | P13839-001 |
| | 6.4TB SSD - NVMe, MU, SC2, DS Firmware | P13829-001 |
| | 6.4TB SSD - NVMe x4 MU, SCN, DS Firmware | P13837-001 |
| | 6.4TB SSD - 2.5 in SFF, NVMe x4, MU, SCN, DS Firmware | P10651-001 |
| | 6.4TB SSD - NVMe x4, 2.5 in SFF, MU, SCN, DS Firmware | P10472-001 |
| | 7.68TB SSD - NVMe, RI, SC2, DS Firmware | P13834-001 |
| | 7.68TB SSD, NVMe x4, 2.5 in SFF, RI SCN, DS Firmware | P10655-001 |
| | 7.68TB SSD - NVMe x4, 2.5 in SFF, RI, SCN, DS Firmware | P10468-001 |
| | 15.36TB SSD, NVMe x4, 2.5 i n SFF, RI SCN, DS Firmware | P10656-001 |
| | **SSD SAS** | |
| | 400GB SAS SSD - 2.5in SFF, MU, DS Firmware, SC | P06576-001 |

| Item | Description | Spare Part Number |
|---|---|---|
| | 400GB SAS SSD - 2.5 in SFF, MU, SC, DS Firmware | P09922-001 |
| | 400GB SAS SSD - 12 Gb/s , 2.5 in SFF, WI, SC, DS Fir mware | P06600-001 |
| | 400GB SAS SSD - 2.5 in SFF, WI, SC, DS Firmware | P09947-001 |
| | 400GB SSD SFF SAS SC | P22585-001 |
| | 800GB SAS SSD - 2.5 in SFF, MU, DS Firmware, SC | P06577-001 |
| | 800GB SAS SSD - 2.5 in SFF, MU, SC, DS Firmware | P09923-001 |
| | 800GB SAS SSD - 2.5 in Sm all Form Factor, MU, Smart Carrier | P20838-001 |
| | 800GB SSD SFF SAS SC | P22581-001 |
| | 800GB SAS SSD - 2.5 in SFF, WI, DS Firmware, SC | P06602-001 |
| | 800GB SAS SSD - 2.5 in SFF, WI, SC, DS Firmware | P09948-001 |
| | 960GB SAS SSD - 3.5 in LFF, Low Profile Converter (LPC), VS, DS Firmware | P10606-001 |
| | 960GB SAS SSD - 2.5 in SFF, RI, DS Firmware, SC | P06596-001 |
| | 960GB SAS SSD - RI, 2.5 in S FF, SC, DS Firmware | P08608-001 |
| | 960GB SAS SSD - SFF, RI, S mart Carrier | P20833-001 |
| | 1.6TB SAS SSD - 2.5 in SFF, M U, SC, DS Firmware | P06580-001 |

| Item | Description | Spare Part Number |
|---|---|---|
| | 1.6TB SAS SSD - 2.5 in SFF, MU, SC, DS Firmware | P09924-001 |
| | 1.6TB SAS SSD - 2.5 in SFF, SC, WI, DS Firmware | P06604-001 |
| | 1.6TB SAS SSD - 2.5 in SFF, WI, SC, DS Firmware | P09949-001 |
| | 1.6TB SSD SFF SAS SC | P22587-001 |
| | 1.6TB SAS SSD - 2.5 in SFF, MU, Smart Carrier | P20839-001 |
| | 1.6TB SAS SSD - 3.5 in LFF, MU, DS Firmware, LPC | P06581-001 |
| | 1.6TB SSD SFF SAS SC | P22582-001 |
| | 1.92TB SAS SSD - 3.5 in LFF, MU, LPC, VS, DS Firmware | P10609-001 |
| | 1.92TB SAS SSD - 2.5 in SFF, RI, DS Firmware, SC | P06597-001 |
| | 1.92TB SAS SSD - RI, 2.5 in SFF, SC, DS Firmware | P08609-001 |
| | 1.92TB SAS SSD - 2.5 in SFF, RI, Smart Carrier | P20834-001 |
| | 3.2TB SAS SSD - 2.5 in SFF, MU, SC, DS Firmware | P06582-001 |
| | 3.2TB SAS SSD - 2.5 in SFF, MU, SC, DS Firmware | P09925-001 |
| | 3.2TB SAS SSD - 2.5 SFF, WI, DS Firmware, SC | P06605-001 |
| | 3.2TB SAS SSD - 2.5 in SFF, MU, Smart Carrier | P20840-001 |
| | 3.84TB SAS SSD - 3.5 in LFF, MU, LPC, VS, DS Firmware | P10611-001 |

| Item | Description | Spare Part Number |
|---|---|---|
| | 3.84TB SAS SSD - 2.5 in SFF, RI, DS Firmware, SC | P06598-001 |
| | 3.84TB SAS SSD - RI, 2.5 in SFF, SC, DS Firmware | P08610-001 |
| | 3.84TB SAS SSD - 2.5 in SFF, RI, Smart Carrier | P20835-001 |
| | 6.4TB SAS SSD - 2.5 in SFF, MU, SC, DS Firmware | P06583-001 |
| | 6.4TB SAS SSD - 2.5 in SFF, MU, SC, DS Firmware | P09926-001 |
| | 7.68TB SAS SSD - 2.5 in SFF, RI, DS Firmware, SC | P06599-001 |
| | 6.4TB SAS SSD - 2.5 in SFF, MU, Smart Carrier | P20841-001 |
| | 7.68TB SAS SSD - RI, 2.5 in SFF, SC, DS Firmware | P08611-001 |
| | 7.68TB SAS SSD - 2.5 in SFF, RI, Smart Carrier | P20836-001 |
| | 15.3TB SAS SSD - 2.5 in SFF, RI, SC | P20837-001 |
| | 15.3TB SAS SSD - RI, 2.5 in SFF, SC, DS Firmware | P08612-001 |
| | 16TB SAS HDD - 3.5 in LFF ISE He Low Profile | P25245-001 |
| | SPS-DRV SSD 30.72TB SFF SAS SC | P22580-001 |
| | Drive SSD 960GB SFF SAS SC | P22635-001 |
| | DRV SSD 1.92TB SFF SAS SC | P22636-001 |
| | DRV SSD 3.84TB SFF SAS SC | P22637-001 |
| | DRV SSD 7.68TB SFF SAS SC | P22589-001 |

| Item | Description | Spare Part Number |
|---|---|---|
| | DRV SSD 15.36TB SFF SAS SC | P22590-001 |
| | **SSD SATA** | |
| | 240GB SSD - SATA interface, M.2 type 2280 form factor, MU, DS Firmware | 875850-001 |
| | 240GB SATA SSD - 2.5 in SFF, RI, SC, DS Firmware | P05319-001 |
| | 240GB SATA SSD - 2.5 in SFF ,SC, RI | P18481-001 |
| | 240GB hot-plug SSD - SATA i nterface, RI, 6 Gb/s transfer rate, 2.5 in SFF, SC, DS firmw are | 875652-001 |
| | 480GB SATA SSDs - 3.5 in LF F, RI, LPC, DS Firmware | P05317-001 |
| | 480GB SATA SSD - 2.5 in SF F, RI, SC, DS Firmware | P05320-001 |
| | 480GB SATA SSD - 2.5 in SF F, RI, DS Firmware, SC | P06571-001 |
| | 480GB SATA SSD - 2.5 in SF F, MU, SC, DS Firmware | P09907-001 |
| | 480GB SATA SSD - 2.5 in SFF SC, MU | P18477-001 |
| | 480GB SATA SSD - 2.5 in SF F, SC, RI | P18482-001 |
| | 480GB SATA SSDs (SSD) - 2.5 in SFF, RI, SC, DS Firmwa re | P05312-001 |
| | 480GB SATA SSD - 2.5 in SF F, MU, SC, DS Firmware | P08690-001 |
| | 960GB SATA SSD - 2.5 in SF F, RI, SC, DS Firmware | P05321-001 |

| Item | Description | Spare Part Number |
|---|---|---|
| | 960GB SATA SSD - 2.5 in SFF, MU, SC, DS Firmware | P09909-001 |
| | 960GB SATA SSD - 2.5 in SFF, SC, MU | P18478-001 |
| | 960GB SATA SSD - 2.5 in SFF, SC, RI | P18483-001 |
| | 960GB SATA SSD - 2.5 in SFF, RI, DS Firmware, SC | P06572-001 |
| | 960GB SATA SSD - 2.5 in SFF, SATA RI, SC, DS Firmware | P05313-001 |
| | 960GB SATA SSD - 2.5 in SFF, MU, SC, DS Firmware | P08692-001 |
| | 960GB SATA SSD - 3.5 in LFF, RI, LPC, DS Firmware | P09847-001 |
| | 1.92TB SATA SSD - 3.5 in LFF, RI, Power Loss Protection (LPC), DS Firmware | P05318-001 |
| | 1.92TB SATA SSD - 3.5 in LFF, MU, LPC, DS Firmware | P08696-001 |
| | 1.92TB SATA SSD - 2.5 in SFF, RI, SC, DS Firmware | P05322-001 |
| | 1.92TB SATA SSD - 2.5 in SFF, MU, SC, DS Firmware | P09912-001 |
| | 1.92TB SATA SSD - 6 Gb/s, 2.5 in SFF, SC, MU | P19695-001 |
| | 1.92TB SATA SSD - 2.5 in SFF, SC, RI | P18484-001 |
| | 1.92TB SATA SSD - 2.5 in SFF, RI, DS Firmware, SC | P06573-001 |
| | 1.92TB SATA SSD - 2.5 in SFF, RI, SC, DS Firmware | P05314-001 |

| Item | Description | Spare Part Number |
|---|---|---|
| | 1.92TB SATA SSD - 2.5 in SFF, MU, SC, DS Firmware | P08694-001 |
| | 1.92TB SATA SSD - 3.5 in LFF, LPC, MU, DS Firmware | P09914-001 |
| | 3.84TB SSD - 2.5 in SFF, SC, MU | P18480-001 |
| | 3.84TB SATA SSD - SC, MU, DS Firmware drive, 2.5in SFF | P02562-001 |
| | 3.84TB SATA SSD - 2.5 in SFF, RI, SC, DS Firmware | P05323-001 |
| | 3.84TB SATA SSD - 2.5 in SFF, RI, DS Firmware, SC | P06574-001 |
| | 3.84TB SATA SSD - 2.5 in SFF SC, RI | P18485-001 |
| | 3.84TB SATA SSD - 2.5 in SFF, RI, SC, DS Firmware (DS) | P05315-001 |
| | 7.68TB SATA SSD - 2.5 in SFF SC, RI | P18486-001 |
| | 7.68TB SATA SSD - 2.5 in SFF, RI, SC, DS Firmware | P05316-001 |
| | 16TB SATA HDD - 3.5 in LFF I SE He Low profile | P25244-001 |
| | 16TB SATA HDD - 3.5 in LFF I SE He SC | P25246-001 |
| | **Optical drive** | |
| | SATA DVD-ROM Optical dri ve (Jack Black color) - 8X DV D-ROM read, 24X CD-ROM read, 9.5 mm (0.374 in) heig ht | 652296-001 |
| | SATA DVD-RW Optical drive (Jack Black color) - 8X DVD | 652297-001 |

| Item | Description | Spare Part Number |
|---|---|---|
| | -ROM read, 24X CD-ROM rea d, 9.5 mm (0.374 in) height | |
| | USB Powered external +/- R W DVD RAM drive - Maximu m 8x DVD +/-R read and wri te speed, Maximum 24x CD read and write speed - USB 2.0 interface (USB 3.0 comp atible) - Does not include ex ternal power adapter | 775676-001 |
| 2 | **Fan** | |
| | Generic, Fan, Module | P23971-001 |
| | HPE DL38X Gen10 Plus high performance fan kit | P23970-001 |
| 3 | **Drive backplane board** | |
| | SFF Drive backplane | |
| | SAS/SATA Backplane board - For the front 2-bay SFF hard drive cage - Up to 12 Gb/s t ransfer speed - Optional bo ard for configurations requir ing more than eight hard dri ves and no optical drive - M ounts on the rear of the dri ve cage | 775401-001 |
| | 2-SFF U.3 NVMe Backplane | P22810-001 |
| | 2-SFF SAS/SATA drive backpl ane plus cage assembly | 875554-001 |
| | 2-SFF x4 StKd, SC, Backplan e | P24040-001 |
| | 8-SFF SAS backplane 12 GB /s interface speed | 878543-001 |
| | U.3 Prem. 8-SFF, Smart Carri er, Backplane | P24047-001 |
| | **LFF Drive backplane** | |

| Item | Description | Spare Part Number |
|---|---|---|
| | 2-LFF, Stack/Riser, Low Profile, backplane | P24042-001 |
| | 4-LFF UBM SAS Backplane | P23681-001 |
| 4 | **Chassis intrusion detection switch** | |
| | INTR Switch, Hood | P24555-001 |
| 5 | **Rear serial port interface** | |
| | Serial port cable 2 x 5p/9p | 875571-001 |
| 6 | **Accelerator** | |
| | Computational accelerator spare part | |
| | Performance and Coverage Analyser (PCA) HPE NVIDIA Tesla T4 16GB | P09571-001 |
| | **Workload accelerator** | |
| | 750GB PCIe x4 WI, HH, DS card | P03580-001 |
| | 1.6TB NVMe x8 MU, Half Height (HH), DS firmware card | P10670-001 |
| | 3.2TB NVMe x8 MU, HH, DS firmware card | P10671-001 |
| | 6.4TB NVMe x8 MU, HH, DS firmware card | P10672-001 |
| | **GPU** | |
| | NVIDIA Quadro RTX4000 module | P11603-001 |
| | Nvidia Quadro RTX6000 24 GB module | P11377-001 |
| | Nvidia Quadro RTX8000 module | P11743-001 |
| | AMD Radeon Instinct MI100 Module | P26986-001 |

| Item | Description | Spare Part Number |
|---|---|---|
| 7 | **HPE DL38x Gen10 12Gb SAS Expander Card** | |
| | 12Gb PCIe SAS Expander - 28-physical links across 9x4 internal ports, 12 Gb/s SAS, 6 Gb/s SATA, PCIe 3.0 x 8 lin k | 876907-001 |
| 8 | **Energy pack** | |
| | 96 W Smart storage battery - One battery pack provides Flash Back Write Cache (F BWC) for all the drive contro llers in the server - Connect s to the system I/O board, 14 5 mm (5.7 in) long cable | 878643-001 |
| | 12Gb PCIe SAS Expander - 28-physical links across 9 x 4 internal ports, 12 Gb/s SAS, 6 Gb/s SATA, PCIe 3.0 x 8 link | P07473-001 |
| 9 | **Power module** | |
| | Power Module, 2U | P23972-001 |
| | Power/system insight display module with label | P00845-001 |
| | Power/ODD Module, LFF, 2U | P23973-001 |
| 10 | **HPE NS204i-p Gen10 Plus boot device** | |
| | B102ip Smart boot solution | P14379-001 |
| | 480GB SSD - NVMe x4 M.2 2 2110 | P24886-001 |
| | **Pensando Distributed Services Platform (DSP) card** | |
| | DSP DSC-25 10/25G 2p SFP 28 Card | P27682-001 |
| | **Midtray drive cage** | |

| Item | Description | Spare Part Number |
|---|---|---|
| | 2x4 x4 Prem SC midt | P24046-001 |
| | **Flex bay enclosure kit** | |
| | Flex-bay enclosure kit for t wo hard drives - Includes t he two SFF hard drive cage (Side by side), SATA hard dr ive backplane board, power cable 275 mm (10.8 in) long, and SATA HDD cable 430 m m (16.9 in) long | 775428-001 |
| | **Cable** | |
| | Mini SAS cable SFF kit | 875089-001 |
| | Mini SAS LFF cable kit | 875090-001 |
| | Slim SAS NVMe direct attac h cables kit | 875092-001 |
| | Cables - Array on Chip (ARO C) to Shiner 36p PORT1+2 ki t | 875093-001 |
| | Mini SAS shiner cable kit | 875094-001 |
| | Data cable kit | 875095-001 |
| | GPU Cables kit | 875097-001 |
| | **SAS/SATA Cable** | |
| | X4 MS-4LFF/PRI/TER/8SFF SAS | P24139-001 |
| | Cable kit - 2/4/8 Large Form Factor SAS/SATA | P24553-001 |
| | **NVMe Cable** | |
| | Bay3, Riser | P24130-001 |
| | Bay2 to X32 , Bay1 to X16 Pri /Se | P24132-001 |

| Item | Description | Spare Part Number |
|---|---|---|
| | Bay2, PP 1/2, 3/4 | P24131-001 |
| | Spliter, Bay3/1, P.P.1-4 to X16, | P24134-001 |
| | Spliter, Bay2, P.P.1-2/3-4 to X1 | P24135-001 |
| | 8NVMe/P1-4/MLB+AROC | P24554-001 |
| | **Power cable** | |
| | Power Cables | P23361-001 |
| | HPE 1600W -48VDC 600V 3.5m power cable kit | P22173-B21 |
| | **Miscellaneous cable** | |
| | Cable - Miscellaneous | P24138-001 |
| | Mini-SAS cable assembly kit (Includes two mini-SAS cables) - For connecting the 8-bay SFF hard drive cage to the drive controller board | 784621-001 |
| | Mini-SAS cable kit (Includes six cables) - For connecting between the 8-bay and 2-bay SFF hard drive cages and the H240 host bus adapter or the P440ar controller board | 784629-001 |
| | Power cable kit | 875096-001 |
| | Cable - I/O Board to Board, Front | P24127-001 |
| | Cable - Midtray, Prem/Basic -Host Board | P24133-001 |
| | Cable - Split Midtray Port,1-4 to X32 Pr | P24136-001 |
| | Cable - Fan-Out,SAS1-3,SAS/SATA-X8 SlimS | P24137-001 |
| | OCP Cable | P24128-001 |

| Item | Description | Spare Part Number |
|---|---|---|
| | Cable - CPU0/CPU1 to Raiser port1 | P24129-001 |
| | **Thermal grease** | |
| | Thermal grease kit | 777298-001 |

**NOTE**

Item 10 not shown in the image

# Option Parts

**Subtopics**


**New Model Specific Parts Lists**
**Processor**
**Memory**
**HPE Optical drives**
**HPE Drives**
**Hard drive kits**
**Media bay kits**
**HPE Storage**
**HPE Smart IO**
**HPE Networking**
**HPE I/O Expansion options**
**HPE Computation and graphics accelerator**
**HPE Graphic cable kits**
**HPE PCIe Workload accelerator**
**HPE Cooling options**
**HPE Power supplies**
**HPE iLO Advanced**
**HPE Converged infrastructure management software**
**HPE Security**
**HPE Smart array controllers**
**Boot device**
**HPE Cables**
**HPE Disk-Based backup**
**Rail kits**
**HPE USB and SD options**

**HPE Support services**
**HPE Unique options**

# New Model Specific Parts Lists

**IMPORTANT**: To obtain current part number information for a specific product model, use the Standard Models page for this product family.

- The product Standard Models page now links the model SKU numbers to the spare parts list for each model found on the **HPE PartSurfer web site**. (To report missing or incorrect parts information in PartSurfer, please use the "Contact us" and "Missing or incorrect data" links within the PartSurfer web site utility.)
- To look up RoHS-compliant information in PartSurfer, use the component's option part number or the sales order number for a system in which the component is used (Available in the QuickSpecs or Standard Models page).

# Processor

| Description | Option Part Number |
|---|---|
| AMD EPYC 7F72 (3.2 GHz/24-core/240 W) FIO Processor kit | P28786-L21 |
| AMD EPYC 7F52 (3.5 GHz/16-core/240 W) FIO Processor kit | P28785-L21 |
| AMD EPYC 7F32 (3.7 GHz/8-core/180 W) FIO Processor kit | P28784-L21 |
| AMD EPYC 7262 (3.2GHz/8-core/155W) FIO Processor kit | P17537-L21 |
| AMD EPYC 7252 (3.1 GHz/8-core/120 W) FIO Processor kit | P21730-L21 |
| AMD EPYC 7272 (2.9 GHz/12-core/120 W) FIO Processor kit | P21785-L21 |
| AMD EPYC 7302 (3.0 GHz/16-core/155 W) FIO Processor kit | P17540-L21 |

| Description | Option Part Number |
|---|---|
| AMD EPYC 7282 (2.8 GHz/16-core/120 W) FIO Processor kit | P21727-L21 |
| AMD EPYC 7352 (2.3 GHz/24-core/155 W) FIO Processor kit | P21724-L21 |
| AMD EPYC 7402 (2.8 GHz/24-core/180 W) FIO Processor kit | P17543-L21 |
| AMD EPYC 7452 (2.35 GHz/32-core/155 W) FIO Processor kit | P21655-L21 |
| AMD EPYC 7502 (2.5 GHz/32-core/180W) FIO Processor kit | P25591-B21 |
| AMD EPYC 7532 (2.4 GHz/32-core/200 W) FIO Processor kit | P25591-L21 |
| AMD EPYC 7532 (2.4 GHz/32-core/200 W) Processor kit | P21628-L21 |
| AMD EPYC 7542 (2.9 GHz/32-core/225 W) FIO Processor kit | P21718-L21 |
| AMD EPYC 7552 (2.2 GHz/48-core/200 W) FIO Processor kit | P21721-L21 |
| AMD EPYC 7642 (2.3 GHz/48-core/225 W) FIO Processor kit | P21663-L21 |
| AMD EPYC 7742 (2.25 GHz/64-core/225 W) FIO Processor kit | P21630-L21 |
| AMD EPYC 7702 (2.0 GHz/64-core/200 W) FIO Processor kit | P17546-L21 |
| AMD EPYC 7F72 (3.2 GHz/24-core/240 W) Processor kit | P28786-B21 |
| AMD EPYC 7F52 (3.5 GHz/16-core/240 W) Processor kit | P28785-B21 |
| AMD EPYC 7F32 (3.7 GHz/8-core/180 W) Processor kit | P28784-B21 |
| AMD EPYC 7262 (3.2 GHz/8-core/155 W) Processor kit | P17537-B21 |

| Description | Option Part Number |
|---|---|
| AMD EPYC 7252 (3.1 GHz/8-core/120 W) Processor kit | P21730-B21 |
| AMD EPYC 7272 (2.9 GHz/12-core/120 W) Processor kit | P21785-B21 |
| AMD EPYC 7302 (3.0 GHz/16-core/155 W) Processor kit | P17540-B21 |
| AMD EPYC 7282 (2.8 GHz/16-core/120 W) Processor kit | P21727-B21 |
| AMD EPYC 7352 (2.3 GHz/24-core/155 W) Processor kit | P21724-B21 |
| AMD EPYC 7402 (2.8 GHz/24-core/180 W) Processor kit | P17543-B21 |
| AMD EPYC 7452 (2.35 GHz/32-core/155 W) Processor kit | P21655-B21 |
| AMD EPYC 7502 (2.5 GHz/32-core/180 W) FIO Processor kit | P21628-B21 |
| AMD EPYC 7542 (2.9 GHz/32-core/225 W) Processor kit | P21718-B21 |
| AMD EPYC 7552 (2.2 GHz/48-core/200 W) Processor kit | P21721-B21 |
| AMD EPYC 7642 (2.3 GHz/48-core/225 W) Processor kit | P21663-B21 |
| AMD EPYC 7742 (2.25 GHz/64-core/225 W) Processor kit | P21630-B21 |
| AMD EPYC 7662 (2.0 GHz/64-core/225 W) Processor kit | P25590-B21 |
| AMD EPYC 7702 (2.0 GHz/64-core/200 W) Processor kit | P17546-B21 |



**NOTE**

- Ships with standard heatsink.

| Description | Option Part Number |
|---|---|

- DDR4 Memory speed will depend on the quantity and type of DIMMs in stalled.
- The xxxxxx-L21 is the first processor shipped, the xxxxxx-B21 is the 2nd processor and ships with 2 additional fans for factory or field installatio n.
- Processors above 180 W use a high performance heatsink and the high performance fan kit.
- Processors with greater than 180 W do not include the fans as the selec tion of processors above 180 W requires the high performance fan kit t hat comes with 6 fans.

## Memory

| Description | Option Part Number |
|---|---|
| **Registered DIMMs (RDIMMs)** [1] | |
| HPE 8GB (1 x 8GB) Single rank x8 DDR4-3 200 CAS-22-22-22 registered smart memo ry kit | P07638-B21 |
| HPE 16GB (1 x 16GB) Single rank x4 DDR4 -3200 CAS-22-22-22 registered smart mem ory kit | P07640-B21 |
| HPE 16GB (1 x 16GB) Dual rank x8 DDR4-3 200 CAS-22-22-22 registered smart memo ry kit | P07642-B21 |
| HPE 32GB (1x32GB) Single Rank x4 DDR4-3 200 CAS-22-22-22 Registered memory kit | P38454-B21 |
| HPE 32GB (1 x 32GB) Dual rank x8 DDR4-3 200 CAS-22-22-22 registered smart memo ry kit | P07644-B21 |

| Description | Option Part Number |
|---|---|
| HPE 32GB (1 x 32GB) Dual rank x4 DDR4-3200 CAS-22-22-22 registered smart memory kit | P07646-B21 |
| HPE 64GB (1 x 64GB) Dual rank x4 DDR4-3200 CAS-22-22-22 registered smart memory kit | P07650-B21 |
| HPE 128GB (1x128GB) Quad Rank x4 DDR4-3200 CAS-22-22-22 Load Reduced Smart Memory Kit | P07652-B21 |
| **Memory blank kit** [2] | |
| HPE DDR4 DIMM Blank kit | P07818-B21 |

**NOTE**

1.
   - Memory DIMM availability with a server platform is dependent upon completion of certification testing.
   - The maximum memory speed is a function of the memory type, memory configuration, and processor model.
   - Mixing of x4 & x8 memory is not allowed
   - 3200 MT/s memory SKUs offer a transfer rate of 3200 MT/s at 1 DIMM per channel and 2933 MT/s at 2 DIMMs per channel
2. Required only when configuration includes 4-LFF Mid Tray kit and a processor(s) that is 126 W and above.

## HPE Optical drives

| Description | Option Part Number |
|---|---|
| HPE 9.5-mm SATA DVD-ROM Optical drive | 726536-B21 |

| Description | Option Part Number |
|---|---|
| HPE 9.5-mm SATA DVD-RW Optical drive | 726537-B21 |
| HPE Mobile USB DVD-RW optical drive | 701498-B21 |

**NOTE**

HPE DL385 Gen10 Plus universal media bay kit (P14609-B21) is required for this option on a SFF model.

Supported only on 8-SFF & 8-LFF models.

## HPE Drives

| Description | Option Part Number |
|---|---|
| **Enterprise - 12G SAS - Small Form Factor (SFF) drives** | |
| HPE 300GB SAS 12G Enterprise 15 K SFF (2.5 in) SC 3-year warranty Digitally Signed (DS) firmware Hard Disk Drive (HDD) | 870753-B21 |
| HPE 300GB SAS 12G Enterprise 10 K SFF (2.5 in) SC 3-year warranty DS firmware HD D | 872475-B21 |
| HPE 600GB SAS 12G Enterprise 15 K SFF (2.5 in) SC 3-year warranty DS firmware HD D | 870757-B21 |
| HPE 600GB SAS 12G Enterprise 10 K SFF (2.5 in) SC 3-year warranty DS firmware HD D | 872477-B21 |
| HPE 900GB SAS 12G Enterprise 15 K SFF (2.5 in) SC 3-year warranty DS firmware HD D | 870759-B21 |
| HPE 1.2TB SAS 12G Enterprise 10 K SFF (2.5 in) SC 3-year warranty DS firmware HDD | 872479-B21 |

| Description | Option Part Number |
|---|---|
| HPE 1.8TB SAS 12G Enterprise 10 K SFF (2.5 in) SC 3-year warranty 512e DS firmware HDD | 872481-B21 |
| HPE 2.4TB SAS 12G Enterprise 10 K SFF (2.5 in) SC 3-year warranty 512e DS firmware HDD | 881457-B21 |
| **Midline - 12G SAS - SFF drives** | |
| HPE 1TB SAS 12G Midline 7.2 K SFF (2.5 in) SC 1-year warranty DS firmware HDD | 832514-B21 |
| HPE 2TB SAS 12G Midline 7.2 K SFF (2.5 in) SC 1-year warranty 512e HDD | 765466-B21 |
| **Midline - 12G SAS - Large Form Factor (LFF) drives** | |
| HPE 2TB SAS 12G Midline 7.2 K LFF (3.5 in) LP 1-year warranty DS firmware HDD | 833926-B21 |
| HPE 4TB SAS 12G Midline 7.2 K LFF (3.5 in) LP 1-year warranty DS firmware HDD | 833928-B21 |
| HPE 6TB SAS 12G Midline 7.2 K LFF (3.5 in) LP 1-year warranty 512e HDD | 861746-B21 |
| HPE 8TB SAS 12G Midline 7.2 K LFF (3.5 in) LP 1-year warranty 512e DS firmware HDD | 834031-B21 |
| HPE 10TB SAS 12G Midline 7.2 K LFF (3.5 in) LP 1-year warranty Helium 512e DS firmware HDD | P09149-B21 |
| HPE 10TB SAS 12G Midline 7.2 K LFF (3.5 in ) LP 1-year warranty He 512e DS 6-pack FIO HDD | P09799-B21 |
| HPE 12TB SAS 12G Midline 7.2 K LFF (3.5 in) LP 1-year warranty Helium 512e DS firmware HDD | 881781-B21 |
| HPE 14TB SAS 12G Midline 7.2 K LFF (3.5 in) LP 1-year warranty Helium 512e DS firmware HDD | P09155-B21 |

| Description | Option Part Number |
|---|---|
| HPE 16TB SAS 12G Business Critical 7.2K LF F (3.5 in) LP 1-year warranty 512e ISE HDD | P23608-B21 |
| HPE 18TB SAS 12G Business Critical 7.2K LF F LP 1-year Warranty 512e ISE HDD | P37669-B21 |
| **Midline - 6G SATA - SFF drives** | |
| HPE 1TB SATA 6G Midline 7.2 K SFF (2.5 in) SC 1-year warranty DS firmware HDD | 655710-B21 |
| HPE 2TB SATA 6G Midline 7.2 K SFF (2.5 in) SC 1-year warranty 512e DS firmware HDD | 765455-B21 |
| **Midline - 6G SATA - LFF drives** | |
| HPE 1TB SATA 6G Midline 7.2 K LFF (3.5 in) L P 1-year warranty DS firmware HDD | 861686-B21 |
| HPE 2TB SATA 6G Midline 7.2 K LFF (3.5 in) L P 1-year warranty DS firmware HDD | 861681-B21 |
| HPE 4TB SATA 6G Midline 7.2 K LFF (3.5 in) L P 1-year warranty DS firmware HDD | 861683-B21 |
| HPE 6TB SATA 6G Midline 7.2 K LFF (3.5 in) L P 1-year warranty 512e HDD | 861742-B21 |
| HPE 8TB SATA 6G Midline 7.2 K LFF (3.5 in) L P 1-year warranty 512e DS firmware HDD | 834028-B21 |
| HPE 10TB SATA 6G Midline 7.2 K LFF (3.5 in) LP 1-year warranty Helium 512e DS firmwar e HDD | P09161-B21 |
| HPE 10TB SATA 6G Midline 7.2K LFF (3.5 in) LP 1yr Wty He 512e DS 6-pack FIO HDD | P09797-B21 |
| HPE 12TB SATA 6G Midline 7.2 K LFF (3.5 in) LP 1-year warranty Helium 512e DS firmwar e HDD | 881787-B21 |
| HPE 14TB SATA 6G Midline 7.2 K LFF (3.5 in) LP 1-year warranty Helium 512e DS firmwar e HDD | P09165-B21 |

| Description | Option Part Number |
|---|---|
| HPE 16TB SATA 6G Business Critical 7.2K LF F (3.5 in) LP 1-year warranty 512e ISE HDD | P23449-B21 |
| HPE 18TB SATA 6G Business Critical 7.2K LF F LP 1-year Warranty 512e ISE HDD | P37678-B21 |
| **Read Intensive (RI) - 12G SAS - SFF - Solid State Drives (SSD)** | |
| HPE 960GB SAS 12G RI SFF SC PM5 SSD | P04517-B21 |
| HPE 960GB SAS 24G RI SFF SC PM6 SSD | P26285-B21 |
| HPE 960GB SAS 12G RI SFF SC PM1643a SSD | P19903-B21 |
| HPE 960GB SAS 12G RI SFF SC SS540 SSD | P21139-B21 |
| HPE 960GB SAS 12G RI SFF SC Value SAS Multi Vendor SSD | P36997-B21 |
| HPE 1.92TB SAS 12G RI SFF SC PM5 SSD | P04519-B21 |
| HPE 1.92TB SAS 24G Read Intensive SFF SC PM6 SSD | P26302-B21 |
| HPE 1.92TB SAS 12G RI SFF SC PM1643a SSD | P19905-B21 |
| HPE 1.92TB SAS 12G RI SFF SC SS540 SSD | P21141-B21 |
| HPE 960GB SAS 12G Read Intensive SFF SC Multi Vendor SSD | P49028-B21 |
| HPE 1.92TB SAS 12G RI SFF SC Value SAS Multi Vendor SSD | P36999-B21 |
| HPE 1.92TB SAS 12G Read Intensive SFF SC Multi Vendor SSD | P49030-B21 |
| HPE 3.84TB SAS 12G RI SFF SC PM5 SSD | P04521-B21 |
| HPE 3.84TB SAS 24G RI SFF SC PM6 SSD | P26306-B21 |
| HPE 3.84TB SAS 12G RI SFF SC PM1643a SSD | P19907-B21 |
| HPE 3.84TB SAS 12G RI SFF SC SS540 SSD | P21143-B21 |

| Description | Option Part Number |
|---|---|
| HPE 3.84TB SAS 12G RI SFF SC Value SAS Multi Vendor SSD | P37001-B21 |
| HPE 3.84TB SAS 12G Read Intensive SFF SC Multi Vendor SSD | P49034-B21 |
| HPE 7.68TB SAS 12G RI SFF SC PM5 SSD | P04523-B21 |
| HPE 7.68TB SAS 24G RI SFF SC PM6 SSD | P26310-B21 |
| HPE 7.68TB SAS 12G RI SFF SC PM1643a SSD | P19909-B21 |
| HPE 7.68TB SAS 12G RI SFF SC SS540 SSD | P21145-B21 |
| HPE 7.68TB SAS 12G RI SFF SC Value SAS Multi Vendor SSD | P37003-B21 |
| HPE 7.68TB SAS 12G Read Intensive SFF SC Multi Vendor SSD | P49039-B21 |
| HPE 15.36TB SAS 12G Read Intensive SFF SC Multi Vendor SSD | P49044-B21 |
| HPE 15.3TB SAS 24G RI SFF SC PM6 SSD | P26314-B21 |
| HPE 15.36TB SAS 12G RI SFF SC PM1643a SSD | P19911-B21 |
| HPE 15.3TB SAS 12G RI SFF SC SS540 SSD | P21147-B21 |
| **Mixed Use (MU) - 12G SAS - SFF - SSD** | |
| HPE 400GB SAS 12G MU SFF (2.5 in) SC 3-year warranty DS firmware SSD | P04525-B21 |
| HPE 800GB SAS 12G MU SFF SC PM5 SSD | P04527-B21 |
| HPE 800GB SAS 24G MU SFF SC PM6 SSD | P09290-B21 |
| HPE 800GB SAS 12G MU SFF SC PM1645a SSD | P19913-B21 |
| HPE 800GB SAS 12G MU SFF SC SS540 SSD | P21131-B21 |
| HPE 800GB SAS 12G Mixed Use SFF SC Multi Vendor SSD | P49046-B21 |

| Description | Option Part Number |
|---|---|
| HPE 960GB SAS 12G MU SFF SC Value SAS Multi Vendor SSD | P37005-B21 |
| HPE 1.6TB SAS 12G Mixed Use SFF SC Multi Vendor SSD | P49048-B21 |
| HPE 1.6TB SAS 12G MU SFF SC PM5 SSD | P04533-B21 |
| HPE 1.6TB SAS 24G MU SFF SC PM6 SSD | P26354-B21 |
| HPE 1.6TB SAS 12G MU SFF (2.5 in) SC 3 -year warranty DS firmware SSD | P09092-B21 |
| HPE 1.6TB SAS 12G MU SFF SC PM1645a SS D | P19915-B21 |
| HPE 1.6TB SAS 12G MU SFF SC SS540 SSD | P21133-B21 |
| HPE 1.92TB SAS 12G MU SFF SC Value SAS Multi Vendor SSD | P37011-B21 |
| HPE 3.2TB SAS 12G Mixed Use SFF SC Multi Vendor SSD | P49052-B21 |
| HPE 3.2TB SAS 12G MU SFF SC PM5 SSD | P04537-B21 |
| HPE 3.2TB SAS 24G MU SFF SC PM6 SSD | P26358-B21 |
| HPE 3.2TB SAS 12G MU SFF (2.5 in) SC 3 -year warranty DS firmware SSD | P09094-B21 |
| HPE 3.2TB SAS 12G MU SFF SC PM1645a SS D | P19917-B21 |
| HPE 3.2TB SAS 12G MU SFF SC SS540 SSD | P21135-B21 |
| HPE 3.84TB SAS 12G MU SFF SC Value SAS Multi Vendor SSD | P37017-B21 |
| HPE 6.4TB SAS 12G Mixed Use SFF SC Multi Vendor SSD | P49056-B21 |
| HPE 6.4TB SAS 12G MU SFF SC PM5 SSD | P04539-B21 |
| HPE 6.4TB SAS 24G MU SFF SC PM6 SSD | P26362-B21 |
| HPE 6.4TB SAS 12G MU SFF (2.5 in) SC 3 -year warranty DS firmware SSD | P09096-B21 |

| Description | Option Part Number |
|---|---|
| HPE 6.4TB SAS 12G MU SFF SC PM1645a SSD | P19919-B21 |
| HPE 6.4TB SAS 12G MU SFF SC SS540 SSD | P21137-B21 |
| **MU SAS - LFF - SSD** | |
| HPE 1.6TB SAS 12G MU LFF LPC PM5 SSD | P04535-B21 |
| HPE 960GB SAS 12G MU LFF LPC Value SAS RM5 SSD | P10452-B21 |
| HPE 960GB SAS 12GMU LFF LPC Value SAS Multi Vendor SSD | P37009-B21 |
| **Write Intensive (WI) - 12G SAS - SFF - SSD** | |
| HPE 400GB SAS 12G WI SFF SC SS540 SSD | P21125-B21 |
| HPE 400GB SAS 12G WI SFF SC PM5 SSD | P04541-B21 |
| HPE 400GB SAS 24G WI SFF SC PM6 SSD | P26295-B21 |
| HPE 800GB SAS 12G WI SFF SC SS540 SSD | P21127-B21 |
| HPE 800GB SAS 12G WI SFF SC PM5 SSD | P04543-B21 |
| HPE 800GB SAS 24G WI SFF SC PM6 SSD | P26372-B21 |
| HPE 1.6TB SAS 12G WI SFF (2.5 in) SC 3-year warranty DS firmware SSD | P09102-B21 |
| HPE 1.6TB SAS 12G WI SFF SC SS540 SSD | P21129-B21 |
| HPE 1.6TB SAS 12G WI SFF SC PM5 SSD | P04545-B21 |
| HPE 1.6TB SAS 24G WI SFF SC PM6 SSD | P26376-B21 |
| **MU - 6G SATA - SFF - SSD** | |
| HPE 480GB SATA 6G MU SFF (2.5 in) SC 3-year warranty multi vendor SSD | P18432-B21 |
| HPE 960GB SATA 6G MU SFF (2.5 in) SC 3-year warranty multi vendor SSD | P18434-B21 |

| Description | Option Part Number |
|---|---|
| HPE 480GB SATA 6G MU SFF SC SM883 SSD | P09712-B21 |
| HPE 960GB SATA 6G MU SFF SC SM883 SSD | P09716-B21 |
| HPE 1.92TB SATA 6G MU SFF (2.5 in) SC 3-year warranty Multi Vendor SSD | P18436-B21 |
| HPE 960GB SATA 6G MU SFF (2.5 in) SC 3-year warranty DS firmware SSD | P07926-B21 |
| HPE 1.92TB SATA 6G MU SFF (2.5 in) SC 3-year warranty multi vendor SSD | P18436-B21 |
| HPE 1.92TB SATA 6G MU SFF SC SM883 SSD | P09722-B21 |
| HPE 1.92TB SATA 6G MU SFF SC SE5031 SSD | P13662-B21 |
| HPE 3.84TB SATA 6G MU SFF (2.5 in) SC 3yr Wty Multi Vendor SSD | P18438-B21 |
| HPE 480GB SATA 6G Mixed Use SFF SC PM897 SSD | P47814-B21 |
| HPE 960GB SATA 6G Mixed Use SFF SC PM897 SSD | P47815-B21 |
| HPE 1.92TB SATA 6G Mixed Use SFF SC PM897 SSD | P47816-B21 |
| HPE 3.84TB SATA 6G MU SFF SC SM883 SSD | P21517-B21 |
| HPE 480GB SATA 6G MU SFF SC 5300M SSD | P19947-B21 |
| HPE 960GB SATA 6G MU SFF SC 5300M SSD | P19949-B21 |
| HPE 1.92TB SATA 6G MU SFF SC 5300M SSD | P19951-B21 |
| HPE 3.84TB SATA 6G MU SFF SC 5300M SSD | P19953-B21 |

**MU - 6G SATA - LFF - SSD**

| Description | Option Part Number |
|---|---|
| HPE 1.92TB SATA 6G MU LFF LPC SM883 SSD | P09726-B21 |
| HPE 1.92TB SATA 6G MU LFF (3.5 in) LPC 3-year warranty DS firmware SSD | P07934-B21 |
| HPE 960GB SATA 6G MU LFF LPC 5300M SSD | P19980-B21 |
| HPE 1.92TB SATA 6G MU LFF LPC 5300M SSD | P19984-B21 |
| **RI - 6G SATA - SFF - SSD** | |
| HPE 240GB SATA 6G RI SFF (2.5 in) SC 3-year warranty DS firmware SSD | P04556-B21 |
| HPE 240GB SATA 6G RI SFF (2.5 in) SC 3-year warranty DS firmware SSD | P18420-B21 |
| HPE 240GB SATA 6G RI SFF (2.5 in) SC 3-year warranty multi vendor SSD | P06194-B21 |
| HPE 480GB SATA 6G RI SFF (2.5 in) SC 3-year warranty DS firmware SSD | P18422-B21 |
| HPE 480GB SATA 6G RI SFF (2.5 in) SC 3-year warranty multi vendor SSD | P04560-B21 |
| HPE 480GB SATA 6G RI SFF (2.5 in) SC 3-year warranty DS firmware SSD | P04564-B21 |
| HPE 480GB SATA 6G RI SFF (2.5 in) SC 3-year warranty DS firmware SSD | P06196-B21 |
| HPE 960GB SATA 6G RI SFF (2.5 in) SC 3-year warranty DS firmware SSD | P18424-B21 |
| HPE 960GB SATA 6G RI SFF SC PM883 SSD | P04564-B21 |
| HPE 960GB SATA 6G RI SFF (2.5 in) SC 3-year warranty DS firmware SSD | P04566-B21 |
| HPE 960GB SATA 6G RI SFF (2.5 in) SC 3-year warranty multi vendor SSD | P06198-B21 |

| Description | Option Part Number |
|---|---|
| HPE 1.92TB SATA 6G RI SFF (2.5 in) SC 3-yea r warranty DS firmware SSD | P18426-B21 |
| HPE 3.84TB SATA 6G RI SFF SC S4510SSD | P05946-B21 |
| HPE 1.92TB SATA 6G RI SFF (2.5 in) SC 3-yea r warranty DS firmware SSD | P04570-B21 |
| HPE 1.92TB SATA 6G RI SFF (2.5 in) SC 3-yea r warranty multi vendor SSD | P06200-B21 |
| HPE 1.92TB SATA 6G RI SFF (2.5 in) SC 3-yea r warranty DS firmware SSD | P18428-B21 |
| HPE 3.84TB SATA 6G RI SFF (2.5 in) SC 3 -year warranty DS firmware SSD | P04482-B21 |
| HPE 3.84TB SATA 6G RI SFF (2.5 in) SC 3 -year warranty DS firmware SSD | P18430-B21 |
| HPE 480GB SATA 6G Read Intensive SFF SC PM893 SSD | P47810-B21 |
| HPE 960GB SATA 6G Read Intensive SFF SC PM893 SSD | P47811-B21 |
| HPE 1.9TB SATA 6G Read Intensive SFF SC P M893 SSD | P47812-B21 |
| HPE 3.84TB SATA 6G Read Intensive SFF SC PM893 SSD | P47813-B21 |
| HPE 240GB SATA 6G RI SFF SC 5300P SSD | P19935-B21 |
| HPE 480GB SATA 6G RI SFF SC 5300P SSD | P19937-B21 |
| HPE 960GB SATA 6G RI SFF SC 5300P SSD | P19939-B2 |
| HPE 1.92TB SATA 6G RI SFF SC 5300P SSD | P19941-B21 |
| HPE 3.84TB SATA 6G RI SFF SC 5300P SSD | P19943-B21 |
| HPE 7.68TB SATA 6G RI SFF SC 5300P SSD | P19945-B21 |
| **RI - 6G SATA - LFF - SSD** | |
| HPE 960GB SATA 6G RI LFF LPC PM883 SS D | P09691-B21 |

| Description | Option Part Number |
|---|---|
| HPE 480GB SATA 6G RI LFF LPC 5300P SSD | P19974-B21 |
| **Very Read Optimized (VRO) - 6G SATA - SFF - SSD** | |
| HPE 1.92TB SATA 6G VRO SFF SC 5210 SSD | P23487-B21 |
| HPE 3.84TB SATA 6G VRO SFF SC 5210 SSD | P23489-B21 |
| HPE 7.68TB SATA 6G VRO SFF SC 5210 SSD | P23493-B21 |
| **VRO - 6G SATA - LFF - SSD** | |
| HPE 3.84TB SATA 6G VRO LFF LPC 5210 SSD | P23491-B21 |
| HPE 7.68TB SATA 6G VRO LFF LPC 5210 SSD | P23495-B21 |
| **Read Intensive – 6G SATA - LFF – Solid State Drives** | |
| HPE 960GB SATA 6G Read Intensive LFF LPC Multi Vendor SSD | P47808-B21 |
| **WI - NVMe - SFF - SSD** | |
| HPE 375GB NVMe Gen3 High performance low latency WI SFF SCN U.2 P4800X SSD | 878014-B21 |
| HPE 750GB NVMe Gen3 High performance low latency WI SFF SCN U.2 P4800X SSD | P06952-B21 |
| **RI - NVMe - SFF - SSD** | |
| HPE 960GB NVMe High performance RI SFF (2.5 in) SC 3-year warranty universal connect SSD | P26538-B21 |
| HPE 960GB NVMe Gen3 Mainstream performance RI SFF SCN U.2 PE6011 SSD | P13676-B21 |
| HPE 960GB NVMe Gen4 Mainstream Performance RI SFF SC U.3 PE8010 SSD | P19807-B21 |
| HPE 1.92TB NVMe Gen3 Mainstream performance RI SFF SCN U.2 PE6011 SSD | P13678-B21 |
| HPE 1.92TB NVMe x4 Lanes performance RI SFF (2.5 in) SC U.3 SSD | P16501-B21 |

| Description | Option Part Number |
|---|---|
| HPE 1.92TB NVMe High performance RI SFF (2.5 in) SC 3-year warranty universal connect SSD | P20007-B21 |
| HPE 1.92TB NVMe Gen4 Mainstream Performance RI SFF SC U.3 PE8010 SSD | P19811-B21 |
| HPE 2TB NVMe Gen3 High performance RI SFF SCN U.2 P4510 SSD | P13695-B21 |
| HPE 3.84TB NVMe x4 Lanes performance RI SFF (2.5 in) SC U.3 SSD | P16503-B21 |
| HPE 3.84TB NVMe Gen3 Mainstream performance RI SFF SCN U.2 PE6011 SSD | P13680-B21 |
| HPE 3.84TB NVMe High performance RI SFF (2.5 in) SC 3-year warranty universal connect SSD | P20009-B21 |
| HPE 3.84TB NVMe Gen4 Mainstream Performance RI SFF SC U.3 PE8010 SSD | P19815-B21 |
| HPE 4TB NVMe Gen3 High performance RI SFF SCN U.2 P4510 SSD | P13697-B21 |
| HPE 7.68TB NVMe High performance RI SFF (2.5 in) SC 3-year warranty universal connect SSD | P26104-B21 |
| HPE 7.68TB NVMe Gen4 Mainstream Performance RI SFF SC U.3 PE8010 SSD | P19819-B21 |
| HPE 15.36TB NVMe High performance RI SFF (2.5 in) SC 3-year warranty universal connect SSD | P26109-B21 |
| HPE 960GB NVMe Mainstream performance RI SFF (2.5 in) SC 3-year warranty universal connect SSD | P25939-B21 |
| HPE 1.92TB NVMe Mainstream performance RI SFF (2.5 in) SC 3-year warranty universal connect SSD | P20131-B21 |
| HPE 3.84TB NVMe Mainstream performance RI SFF (2.5 in) SC 3-year warranty universal connect SSD | P20133-B21 |

| Description | Option Part Number |
|---|---|
| HPE 7.68TB NVMe Mainstream performance RI SFF (2.5 in) SC 3-year warranty universal connect SSD | P20135-B21 |
| **SED (Self-Encryption Drive) SSDs** | |
| HPE 1.6TB NVMe Gen4 High Performance Mixed Use SFF SC Self-encrypting FIPS U.3 CM6 SSD | P44584-B21 |
| HPE 3.2TB NVMe Gen4 High Performance Mixed Use SFF SC Self-encrypting FIPS U.3 CM6 SSD | P44592-B21 |
| HPE 1.92TB NVMe Gen4 High Performance Read Intensive SFF SC Self-encrypting FIPS U.3 CM6 SSD | P44568-B21 |
| HPE 3.84TB NVMe Gen4 High Performance Read Intensive SFF SC Self-encrypting FIPS U.3 CM6 SSD | P44576-B21 |
| **MU - NVMe - SFF - SSD** | |
| HPE 800GB NVMe High performance MU SFF (2.5 in) SC 3-year warranty universal connect SSD | P26543-B21 |
| HPE 800GB NVMe Gen3 Mainstream performance MU SFF SCN U.2 PE6031 SSD | P13668-B21 |
| HPE 800GB NVMe High performance MU SFF (2.5 in) SC 3-year warranty universal connect SSD | P20084-B21 |
| HPE 800GB NVMe Gen4 Mainstream Performance MU SFF SC U.3 PE8030 SSD | P19823-B21 |
| HPE 1.6TB NVMe High performance MU SFF (2.5 in) SC 3-year warranty universal connect SSD | P16497-B21 |
| HPE 1.6TB NVMe Gen3 Mainstream performance MU SFF SCN U.2 PE6031 SSD | P13670-B21 |
| HPE 1.6TB NVMe High performance MU SFF (2.5 in) SC 3-year warranty universal connect SSD | P20086-B21 |

| Description | Option Part Number |
|---|---|
| HPE 1.6TB NVMe Gen3 High performance MU SFF SCN U.2 P4610 SSD | P13699-B21 |
| HPE 1.6TB NVMe Gen4 Mainstream Performance MU SFF SC U.3 PE8030 SSD | P19827-B21 |
| HPE 3.2TB NVMe High performance MU SFF (2.5 in) SC 3-year warranty universal connect SSD | P16499-B21 |
| HPE 3.2TB NVMe Gen3 Mainstream performance MU SFF SCN U.2 PE6031 SSD | P13672-B21 |
| HPE 3.2TB NVMe Gen3 High performance MU SFF SCN U.2 P4610 SSD | P13701-B21 |
| HPE 3.2TB NVMe High performance MU SFF (2.5 in) SC 3-year warranty universal connect SSD | P20088-B21 |
| HPE 6.4TB NVMe Gen3 Mainstream performance MU SFF SCN U.2 PE6031 SSD | P13674-B21 |
| HPE 6.4TB NVMe Gen3 High performance MU SFF SCN U.2 P4610 SSD | P13703-B21 |
| HPE 6.4TB NVMe High performance MU SFF (2.5 in) SC 3-year warranty universal connect SSD | P26124-B21 |
| HPE 6.4TB NVMe Gen4 Mainstream Performance MU SFF SC U.3 PE8030 SSD | P19835-B21 |
| HPE 800GB NVMe Mainstream performance MU SFF (2.5 in) SC 3-year warranty universal connect SSD | P25948-B21 |
| HPE 1.6TB NVMe Mainstream performance MU SFF (2.5 in) SC 3-year warranty universal connect SSD | P20195-B21 |
| HPE 3.2TB NVMe Mainstream performance MU SFF (2.5 in) SC 3-year warranty universal connect SSD | P20197-B21 |
| HPE 3.2TB NVMe Gen4 Mainstream Performance MU SFF SCN U.3 PE8030 SSD | P19831-B21 |

| Description | Option Part Number |
|---|---|
| HPE 6.4TB NVMe Mainstream performance MU SFF (2.5 in) SC 3-year warranty univers al connect SSD | P20199-B21 |
| **Internal dual M.2 kit** | |
| HPE Universal SATA 6G AIC HHHL M.2 SSD enablement kit | 878783-B21 |
| **Read Intensive - M.2 - Solid State Drives** | |
| HPE 480GB SATA 6G Read Intensive M.2 M ulti Vendor SSD | P47818-B21 |
| **RI - M.2 - SSD** | |
| HPE 240GB SATA 6G RI M.2 2280 5300B SS D | P19888-B21 |
| HPE 480GB SATA 6G RI M.2 2280 5300B SS D | P19890-B21 |

## Hard drive kits

| Description | Option Part Number |
|---|---|
| HPE DL38X Gen10 Plus 4LFF SAS/SATA low profile mid tray drive cage kit [1] | P14503-B21 |
| HPE DL38X Gen10 Plus 2-LFF HDD riser kit [2] | P14579-B21 |
| HPE DL385 Gen10 Plus 2-SFF NVMe/SAS s mart carrier drive cage kit [3] | P14505-B21 |
| HPE DL385 Gen10 Plus 2-SFF NVMe/SAS s mart carrier front/rear drive cage kit [4] | P14506-B21 |
| HPE DL385 Gen10 Plus 2-SFF SAS/SATA sm art carrier LFF chassis drive cage kit [5] | P14507-B21 |
| HPE DL385 Gen10 Plus 8-SFF NVMe/SAS s mart carrier box 1-3 drive cage kit [6] | P14578-B21 |

| Description | Option Part Number |
|---|---|
| HPE DL385 Gen10 Plus 2-SFF U.3 Premium Secondary Riser Kit | P25902-B21 |
| HPE DL38X Gen10 Plus 2-LFF Low Profile Secondary Riser Kit | P25903-B21 |
| HPE DL385 Gen10 Plus Retimer Card Primary Cable Kit | P25602-B21 |
| HPE DL385 Gen10 Plus Retimer Card Secondary Cable Kit | P25604-B21 |
| HPE LFF Hard drive blank kit | 666986-B21 |
| HPE Gen9 LFF HDD Spade Blank Kit | 807878-B21 |
| HPE SFF Hard drive blank kit | 666987-B21 |

**NOTE**

1.
   - Supported with both the 8 and 12 LFF model.
   - With this mid-tray only single-wide (8.5-inch cards with connections or less) cards are supported. Full Length PCIe cards cannot be supported.
   - This drive does support hot-swap drives.
   - This requires Max Performance Fan kit (P14608-B21 ).
   - Requires DIMM Blank kit (P07818-B21), if this option is selected with processor 200 W and above.
2.
   - Supported only on 8 LFF & 12 LFF Models.
   - This option occupies primary riser slot.
3.
   - 2-SFF NVMe/SAS SC Kit (P14506-B21) and 2-SFF NVMe/SAS Riser Kit (P14505-B21) cannot be selected together.
   - Supports 2-SFF rear in Riser1 or 2 location – max 2 supported SFF model.

| Description | Option Part Number |
|---|---|

- Supports 2-SFF rear in Riser1 or 2 location in LFF model.

4.

- Supports upto 2-SFF drives in 8-SFF, 12-LFF and 24-SFF Models.
- Max Qty=2 ,allowed on 8-SFF model.
- Only 1 drive cage can be ordered with 12-LFF and 24-SFF models.
- 8-SFF Model with 2 drive cages, requires Universal Media Bay.

5. Supported only on 8-LFF Model.

6.

- Supported only on 8-SFF Model.
- Maximum upto 2 drive cages can be selected.
- If Drive Cage Qty=1 is selected with one processor only, it requires t he 8NVMe Direct Support Bundle (P22750-B21) to be selected.
- If Drive Cage Qty=1 is selected with two processors, it requires the 8 NVMe Direct Support Bundle (P19358-B21) to be selected.
- If Qty=2 is selected, it requires 16 NVMe Balanced Support Bundle (P 22751-B21) to be selected.

## Media bay kits

| Description | Option Part Number |
|---|---|
| HPE DL38X Gen10 Plus universal media b ay kit [1] | P14609-B21 |
| HPE DL38X NVMe 8 SSD Express bay enabl ement kit | 826689-B21 |
| HPE DL385 Gen10 Plus 8-SFF NVMe/SAS s mart carrier mid tray drive cage kit | P14601-B21 |

| Description | Option Part Number |
|---|---|

**NOTE**

- The HPE DL385 Gen10 Plus Universal Media bay provides front Display Port and 2xUSB 2.0; plus support for 2x SFF front drives or 2 NVMe fron t drives and ODD support (Not included); and can only be located in B ox1 in either an 8-SFF or 8+8-SFF model.
- This is a 8-SFF model option only.
- This option cannot be ordered when Qty=2 of following options is selec ted. HPE DL380 Gen10 Box1/2 Cage Bkpln Kit (826691-B21) and HPE DL Gen10 Plus 8-SFF x4NVMe/SAS SC Kit (P14578-B21).

## HPE Storage

| Description | Option Part Number |
|---|---|
| **Emulex fibre channel HBAs** | |
| HPE StoreFabric SN1200E 16Gb single port fibre channel HBA | Q0L13A |
| HPE StoreFabric SN1200E 16Gb dual port fi bre channel HBA | Q0L14A |
| HPE StoreFabric SN1600E 32Gb single port fibre channel HBA | Q0L11A |
| HPE StoreFabric SN1600E 32Gb dual port f ibre channel HBA | Q0L12A |
| HPE SN1610E 32Gb 1-port Fibre Channel H BA | R2J62A |
| HPE SN1610E 32Gb 2-port Fibre Channel H BA | R2J63A |
| HPE SN1700E 64Gb 1-port Fibre Channel H ost Bus Adapter | R7N77A |

| Description | Option Part Number |
|---|---|
| HPE SN1700E 64Gb 2-port Fibre Channel Host Bus Adapter | R7N78A |
| **QLogic fibre channel HBAs** | |
| HPE StoreFabric SN1100Q 16Gb single port fibre channel HBA | P9D93A |
| HPE StoreFabric SN1100Q 16Gb dual port fibre channel HBA | P9D94A |
| HPE SN1600Q 32Gb Single port fibre channel HBA | P9M75A |
| HPE SN1600Q 32Gb Dual port fibre channel HBA | P9M76A |
| HPE SN1610Q 32Gb 1-port fibre channel HBA | R2E08A |
| HPE SN1610Q 32Gb 2-port fibre channel HBA | R2E09A |
| **NVMe Adaptors** | |
| HPE DL385 Gen10 Plus 12Gb NVMe 1-port adapter | P25526-B21 |
| HPE DL385 Gen10 Plus 12Gb NVMe 2-port adapter | P25527-B21 |

# HPE Smart IO

| Description | Option Part Number |
|---|---|
| **Pensando Distributed Services Card (DSC)** | |
| Pensando Distributed Services Platform (DSP) DSC-25 10/25Gb 2-port SFP28 card[1] | P26966-B21 |
| **Pensando DSP silver software licenses** | |

| Description | Option Part Number |
|---|---|
| Pensando DSP Silver 1-year subscription 24 x7 support E-RTU | R6A06AAE |
| Pensando DSP Silver 3-year subscription 24 x7 support E-RTU | R6A07AAE |
| Pensando DSP Silver 4-year subscription 24 x7 support E-RTU | R6F68AAE |
| Pensando SDP Silver 5-year subscription 24 x7 support E-RTU | R6A08AAE |
| **Pensando DSP platinum software licenses** | |
| Pensando DSP platinum 1-year renewal sub scription 24x7 support E-RTU | R6A09AAE |
| Pensando DSP platinum 3-year subscriptio n 24x7 support E-RTU | R6A10AAE |
| Pensando DSP platinum 4-year subscriptio n 24x7 support E-RTU | R6F69AAE |
| Pensando DSP platinum 5-year subscriptio n 24x7 support E-RTU | R6A11AAE |

**NOTE**

1. Each card instance requires one RTU license of Silver or Platinum soft ware. In case of more than one adapter, RTU licenses doesn't need to b e of the same part number.

**Requirements:**

- One 3-year/4-year/5-year Silver or Platinum license must be purchased for every DSC -25 card in a server.
- 1-year Silver, 1-year Platinum, and 1-year Policy and Services Manager (PSM) licenses are reserved for renewals only.
- One PSM license is required to manage up to 3,000 DSC-25 cards.

# HPE Networking

| Description | Option Part Number |
|---|---|
| **1 GbE Adapters** | |
| HPE Ethernet 1Gb 4-port BASE-T I350-T4 adapter | P21106-B21 |
| **10 GbE Adapters** | |
| HPE Ethernet 10Gb 2-port BASE-T QL41132 HLRJ adapter | P08437-B21 |
| HPE Ethernet 10Gb 2-port SFP+ QL41132H LCU adapter | P21933-B21 |
| HPE Ethernet 10Gb 4-port SFP+ QL41134H LCU adapter | P10094-B21 |
| Broadcom BCM57416 Ethernet 10Gb 2-port BASE-T Adapter for HPE | P26253-B21 |
| Broadcom BCM57412 Ethernet 10Gb 2-port SFP+ Adapter | P26259-B21 |
| Intel X710-DA2 Ethernet 10Gb 2-port SFP+ Adapter | P28787-B21 |
| **10/25 GbE Adapters** | |
| Mellanox MCX512F-ACHT Ethernet 10/25Gb 2-port SFP28 Adapter for HPE | P13188-B21 |
| Mellanox MCX631102AS-ADAT Ethernet 10/25Gb 2-port SFP28 Adapter for HPE | P42044-B21 |
| HPE Ethernet 10/25Gb 2-port SFP28 X252 2-25G-PLUS Adapter | P21109-B21 |
| Marvell QL41232HLCU Ethernet 10/25Gb 2-port SFP28 Adapter for HPE | P22702-B21 |
| HPE Ethernet 10/25Gb 2-port SFP28 X252 2-25G Adapter | P24437-B21 |
| Broadcom BCM57414 Ethernet 10/25Gb 2-port SFP28 Adapter | P26262-B21 |

| Description | Option Part Number |
|---|---|
| Intel E810-XXVDA2 Ethernet 10/25Gb 2-port SFP28 Adapter for HPE | P08443-B21 |
| Intel E810-XXVDA4 Ethernet 10/25Gb 4-port SFP28 Adapter for HPE | P08458-B21 |
| **100/200 GbE Adapters** | |
| HPE NV60100M 100Gb 2-port Storage Offload Adapter | R8M41A |
| Intel E810-CQDA2 Ethernet 100Gb 2-port QSFP28 Adapter for HPE | P21112-B21 |
| HPE Ethernet 100Gb 2-port QSFP28 MCX516A-CCHT Adapter | P21927-B21 |
| Intel I350-T4 Ethernet 1Gb 4-port BASE-T OCP3 Adapter | P31246-B21 |
| Mellanox MCX623105AS-VDAT Ethernet 200Gb 1-port QSFP56 Adapter for HPE | P10180-B21 |
| Mellanox MCX623106AS-CDAT Ethernet 100Gb 2-port QSFP56 Adapter | P25960-B21 |
| **OCP Adapters** | |
| HPE Ethernet 1Gb 4-port BASE-T I350-T4 OCP3 adapter | P08449-B21 |
| Marvell QL41132HQCU Ethernet 10Gb 2-port SFP+ OCP3 Adapter | P08452-B21 |
| Marvell QL41132HQRJ Ethernet 10Gb 2-port BASE-T OCP3 Adapter | P10103-B21 |
| Broadcom BCM57416 Ethernet 10Gb 2-port BASE-T OCP3 Adapter | P10097-B21 |
| Broadcom BCM57412 Ethernet 10Gb 2-port SFP+ OCP3 Adapter | P26256-B21 |
| Intel X710-DA2 Ethernet 10Gb 2-port SFP+ OCP3 Adapter | P28778-B21 |
| Broadcom BCM57414 Ethernet 10/25Gb 2-port SFP28 OCP3 Adapter | P10115-B21 |
| Mellanox MCX631432AS-ADAI Ethernet 10/25Gb 2-port SFP28 OCP3 Adapter for HPE | P42041-B21 |

| Description | Option Part Number |
|---|---|
| Mellanox MCX562A-ACAI Ethernet 10/25Gb 2-port SFP28 OCP3 Adapter for HPE | P10112-B21 |
| Intel E810-XXVDA2 Ethernet 10/25Gb 2-port SFP28 OCP3 Adapter for HPE | P10106-B21 |
| Intel E810-CQDA2 Ethernet 100Gb 2-port QSFP28 OCP3 Adapter for HPE | P22767-B21 |
| Marvell QL41232HQCU Ethernet 10/25Gb 2-port SFP28 OCP3 Adapter for HPE | P10118-B21 |
| HPE DL385 Gen10 Plus OCP Upgrade Cable kit | P14603-B21 |
| **HPE InfiniBand** | |
| HPE InfiniBand HDR/Ethernet 200Gb 1-port QSFP56 MCX653435A-HDAI OCP3 PCIe4 x16 Adapter | P31323-B21 |
| HPE InfiniBand HDR/Ethernet 200Gb 2-port QSFP56 MCX653436A-HDAI OCP3 PCIe4 x16 Adapter | P31348-B21 |
| HPE InfiniBand HDR/Ethernet 200Gb 1-port QSFP56 MCX653105A-HDAT PCIe 4 x16 Adapter | P23664-B21 |
| HPE InfiniBand HDR100/Ethernet 100Gb 1-port QSFP56 MCX653105A-ECAT PCIe 4 x16 Adapter | P23665-B21 |
| HPE InfiniBand HDR100/Ethernet 100Gb 2-port QSFP56 MCX653106A-ECAT PCIe 4 x16 Adapter | P23666-B21 |

**NOTE**

- 4-port adapters go only into Slot 1. A minimum of two Gigabytes (2GB) of server memory is required per each adapter.
- Direct Attach Cable (DAC) for copper environments or fiber transceivers and cables for fiber-optic environments must be purchased separately.
- See the related NIC QuickSpecs for Technical Specifications and additional information.

| Description | Option Part Number |
|---|---|
| • Current Mellanox OCP NIC MCX562A does not support multi-host confi guration as two x8, so make sure to use cable P14318-001 to connect to CPU1 to upgrade and configure to one x16 OCP NIC.<br>• OCP Adapters do not consume PCIe slot. Only 1 slot is available for OC P adapters. Only SFF OCP adapters below 35 W can be supported.<br>**Click here to view the Server Networking Transceiver and Cable Comp atibility Matrix for more information**. | |

## HPE I/O Expansion options

| Description | Option Part Number |
|---|---|
| HPE DL38X Gen10 Plus primary NEBS-com pliant riser kit [1] | P14575-B21 |
| HPE DL38X Gen10 Plus secondary NEBS-co mpliant riser kit [2] | P14577-B21 |
| HPE DL38X Gen10 Plus x8/x16/x8 seconda ry riser kit [2] | P14587-B21 |
| HPE DL38X Gen10 Plus x16 tertiary riser kit [2] | P14588-B21 |
| HPE DL38X Gen10 Plus x16/x16 Slot 1/2 sec ondary riser kit [2] | P14589-B21 |
| HPE DL38X Gen10 Plus x16/x16 slot 2/3 sec ondary riser kit [2] | P14590-B21 |
| HPE DL38X Gen10 Plus slot1 x16 adder for s lot2/3 riser kit [3] | P14600-B21 |
| HPE DL385 Gen10 Plus Primary/Secondary Riser Cage without Retainer Clip | P38771-B21 |
| HPE DL385 Gen10 Plus Tertiary Riser Cage without Retainer Clip | P38774-B21 |

| Description | Option Part Number |
|---|---|

**NOTE**

For a Secondary/Tertiary riser the second processor is required

1. Requires selection of HPE DL38X Gen10 Plus Tertiary NEBS-compliant R iser Kit (P14577-B21).
2. Requires selection of a 2nd processor.
3. Required to add additional x16 PCIe Gen4 lanes for Primary/Secondary Riser3.

## HPE Computation and graphics accelerator

| Description | Option Part Number |
|---|---|
| HPE NVIDIA Tesla T4 16GB computational a ccelerator[1] | R0W29C |
| NVIDIA Tesla V100S 32GB computational a ccelerator[2] | R4D73C |
| HPE NVIDIA Quadro RTX 4000 graphics ac celerator[2] | R1F95C |
| HPE NVIDIA Quadro RTX 6000 graphics ac celerator[2] | R0Z45C |
| HPE NVIDIA Quadro RTX 8000 graphics ac celerator[2] | R1F97C |
| NVIDIA A100 40GB PCIe Computational ac celerator[2] | R6B53C |
| Xilinx Alveo U50 accelerator | R4B02C |
| Xilinx Alveo U250 accelerator | R4B03C |

1. DL385 Gen10 Plus can support up to 8 of this accelerator.

| Description | Option Part Number |
|---|---|
| 2. DL385 Gen10 Plus can support up to 3 of this accelerator. | |

## HPE Graphic cable kits

| Description | Option Part Number |
|---|---|
| HPE GPU 2x 8-pin Cable Kit[1] | P03849-B21 |
| HPE DL38x Gen10 8-pin Keyed cable kit[2] | 871829-B21 |
| HPE DL38x Gen10 8x 6-pin Cable kit[3] | 871830-B21 |
| HPE DL38x Gen10 8-pin Cable kit | 871828-B21 |

**NOTE**

1. This cable kit is for use with the RTX 4000 graphics accelerator.
2. This cable kit is for use with the V100S PCIe 32GB module.
3. This cable kit is for use with the RTX 6000 and RTX 8000 graphics acc elerator.

## HPE PCIe Workload accelerator

| Description | Option Part Number |
|---|---|
| HPE 750GB PCIe x4 lanes WI HHHL 3-year warranty DS firmware card | 878038-B21 |
| HPE 1.6TB NVMe Gen4 x8 High Performanc e Mixed Use AIC HHHL PM1735 SSD | P26934-B21 |

| Description | Option Part Number |
|---|---|
| HPE 3.2TB NVMe Gen4 x8 High Performance Mixed Use AIC HHHL PM1735 SSD | P26936-B21 |

## HPE Cooling options

| Description | Option Part Number |
|---|---|
| HPE DL38X Gen10 Plus maximum performance fan kit | P14608-B21 |

**NOTE**

- This kit is required for specific Ambient temperature environments.
- Max Performance fan kit consists of 6 fans, these will need to replace all the standard fans in the unit, and fill all 6 fan cages.
- The 12-LFF and 24 SFF models (including field upgrades to 24-SFF) will already include 6 Max Performance fan kits.
- The High Performance fan kit is needed to support certain Passive GPGPU (Graphics cards) configurations; or ASHRAE operating environments.

**Click here to view the HPE ProLiant Gen10 Plus Server Extended Ambient Temperature Guidelines**.

## HPE Power supplies

| Description | Option Part Number |
|---|---|
| HPE 500 W Flex slot platinum hot plug low halogen power supply kit | 865408-B21 |

| Description | Option Part Number |
|---|---|
| HPE 800 W Flex slot titanium hot plug low halogen power supply kit | 865438-B21 |
| HPE 800 W Flex slot platinum hot plug low halogen power supply kit | 865414-B21 |
| HPE 800 W Flex slot (-48) V dc hot plug l ow halogen power supply kit | 865434-B21 |
| HPE 800 W Flex slot universal hot plug low halogen power supply kit | 865428-B21 |
| HPE 1600 W Flex slot platinum hot plug l ow halogen power supply kit | 830272-B21 |

**NOTE**

- Select one or more power supplies.
- 1600 W Power supplies only support high line voltage (200 V ac to 240 V ac).
- Prior to making a power supply selection it is highly recommended tha t the HPE Power Advisor is run to determine the right size power supply for server configuration. **Click here to access the HPE Power Advisor**.
- All power supplies in a server should match. Mixing Power Supplies is n ot supported.
- HPE ProLiant servers ship with an IEC-IEC power cord used for rack mo unting with Power Distribution Units (PDUs).

## HPE iLO Advanced

| Description | Option Part Number |
|---|---|
| HPE iLO Advanced electronic license with 1 -year support on iLO licensed features | E6U59ABE |

| Description | Option Part Number |
|---|---|
| HPE iLO Advanced 1-server license with 1 -year support on iLO licensed features | 512485-B21 |
| HPE iLO Advanced flexible quantity licens e with 1-year support on iLO licensed featu res | 512486-B21 |
| HPE iLO Advanced AKA tracking license wit h 1-year support on iLO licensed features | 512487-B21 |
| HPE iLO Advanced electronic license with 3-year support on iLO licensed feature | E6U64ABE |
| HPE iLO Advanced 1-server license with 3 -year support on iLO licensed feature | BD505A |
| HPE iLO Advanced flexible quantity license with 3-year support on iLO licensed feature | BD506A |
| HPE iLO Advanced AKA tracking license wit h 3-year support on iLO licensed feature | BD507A |
| HPE iLO Common password FIO setting | P08040-B21 |

## HPE Converged infrastructure management software

| Description | Option Parts |
|---|---|
| HPE OneView standard 1-year 9x5 support flexible quantity E-RTU | K6F98AAE |
| HPE OneView including 3-year 24x7 suppo rt physical 1-server LTU | E5Y34A |
| HPE OneView including 3-year 24x7 suppo rt track 1-server LTU | E5Y36A |
| HPE OneView including 3-year 24x7 suppo rt flexible Quantity E-LTU | E5Y35AAE |
| HPE OneView Upgrade from insight manag ement 3-year 24x7 support 1-server LTU | F6Q91A |

| Description | Option Parts |
|---|---|
| HPE OneView w/o iLO including 3-year 24x 7 Support 1-server LTU | P8B24A |
| HPE OneView w/o iLO including 3-year 24x 7 Support Track 1-server LTU | P8B25A |
| HPE OneView w/o iLO including 3-year 24x 7 support 1-server FIO LTU | P8B31A |
| HPE OneView w/o iLO Advance including 3 -year 24x7 support track 1-server LTU | E5Y40A |
| HPE OneView for ProLiant DL Server includi ng 3-year 24x7 support FIO bundle physica l 1-server LTU | E5Y43A |
| HPE OneView for ProLiant DL Server inclu ding 3-year 24x7 support bundle track 1-se rver LTU | E5Y44A |
| HPE OneView upgrade from insight manag ement including 3-year 24x7 support flexib le quantity E-LTU | E5Y45AAE |
| HPE OneView w/o iLO including 3-year 24x 7 support flexible quantity E-LTU | P8B26AAE |

## HPE Security

| Description | Option Part Number |
|---|---|
| HPE Gen10 2U bezel kit | 867809-B21 |
| HPE Bezel lock kit | 875519-B21 |
| HPE Gen10 Plus chassis intrusion detection kit | P14604-B21 |
| HPE Gen10 TPM 1.2 FIO Setting | 872108-B21 |
| HPE Gen10 Plus TPM BR module kit | P13771-B21 |

| Description | Option Part Number |
|---|---|
| HPE Server Platform LDevID FIO Setting | P49803-B21 |
| HPE Server Identity LDevID FIO Setting | P49814-B21 |

**NOTE**

- This is TPM 2.0 for Gen10 plus.
- This provides a physical connection from the chassis board and hood a nd detects any physical intrusion into the chassis, providing security du ring the entire supply chain process of shipping, receiving, distribution, and operation.

## HPE Smart array controllers

| Description | Option Part Number |
|---|---|
| **HPE 96 W Smart storage battery (up to 20 Devices) with 145 mm cable kit** [1] | |
| HPE Smart Array P816i-a SR Gen10 (16 Inter nal lanes/4GB cache/SmartCache) 12G SAS modular controller [2] | 804338-B21 |
| HPE Smart Array P408i-a SR Gen10 (8 Inter nal lanes/2GB cache) 12G SAS modular con troller [3] | 804331-B21 |
| HPE Smart Array P408i-p SR Gen10 (8 Inter nal lanes/2GB cache) 12G SAS PCIe plug-in controller | 830824-B21 |
| HPE Smart Array P408e-p SR Gen10 (8 Exte rnal lanes/4GB cache) 12G SAS PCIe plug-in controller | 804405-B21 |
| **Essential RAID Controllers** | |
| HPE Smart Array E208i-p SR Gen10 (8 Inte rnal lanes/No cache) 12G SAS PCIe Plug-in Controller | 804394-B21 |

| Description | Option Part Number |
|---|---|
| HPE Smart Array E208e-p SR Gen10 (8 External lanes/No cache) 12G SAS PCIe plug-in controller | 804398-B21 |
| HPE Smart Array E208i-a SR Gen10 (8 Internal lanes/No cache) 12G SAS modular controller[3] | 804326-B21 |

**NOTE**

1. All performance RAID controllers are supported by the HPE Smart Storage Battery (P01366-B21), which supports multiple devices and is sold separately.
2. Does not occupy a PCIe expansion slot and includes SmartCache license. The P816i-a cable ships in the 12-LFF chassis only.
3. Does not occupy a PCIe expansion slot.

## Boot device

| Description | Option Part Number |
|---|---|
| HPE NS204i-p x2 Lanes NVMe PCIe3 x8 OS Boot device | P12965-B21 |

## HPE Cables

| Description | Option Part Number |
|---|---|
| HPE DL38X Gen10 Plus rear serial cable kit | P14606-B21 |
| HPE DL38X Gen10 Plus 8NVMe CPU1/2 cable kit | P22829-B21 |

| Description | Option Part Number |
|---|---|
| HPE DL38X Gen10 Plus 8NVMe CPU1 cable kit | P22834-B21 |
| HPE DL38X Gen10 Plus 16NVMe CPU1/2 cable kit | P22835-B21 |
| HPE Gen10 Plus chassis intrusion detection kit | P14604-B21 |
| HPE DL38X Gen10 Plus mini SAS 3 position Cable | P14605-B21 |
| HPE DL38X Gen10 Plus 12LFF SAS Expander Card Cable Kit | P23392-B21 |
| HPE ProLiant DL38X Gen10 Plus 2SFF SAS/SATA SC Cage Cable Kit | P42047-B21 |

## HPE Disk-Based backup

| Description | Option Part Number |
|---|---|
| HPE RDX External docking station | C8S07B |

## Rail kits

| Description | Option Part Number |
|---|---|
| HPE DL38X Gen10 Plus 2U SFF easy install rail kit [1] | P22018-B21 |
| HPE DL38X Gen10 Plus 2U LFF easy install rail kit [2] | P22019-B21 |
| HPE DL38X Gen10 Plus 2U cable management arm for rail kit | P22020-B21 |

| Description | Option Part Number |
|---|---|
| HPE DL38X Gen10 Plus 2U LFF ball bearing rail kit [2] | P22022-B21 |
| HPE DL38X Gen10 Plus 2U SFF ball bearing rail kit [1] | P22021-B21 |

**NOTE**

- Ball bearing and Easy Install rail kits contain telescoping rails which all ow for in-rack serviceability.
- To assist in the installation of the server into the rack an optional instal lation tool is available by contacting the local services representative ( 695539-001).
- Hewlett Packard Enterprise recommends that a minimum of two people are required for all Rack Server installations. Refer to the installation ins tructions for proper tools and number of people to use for any installati on.
- CTO Models do not ship with rail kits, they need to be ordered separate ly.

1. Supported on SFF Model only.
2. Supported on LFF Model only.

## HPE USB and SD options

| Description | Option Part Number |
|---|---|
| **HPE Enterprise mainstream flash media kits for memory cards** | |
| HPE 32GB MicroSD RAID 1 USB boot drive | P21868-B21 |

# HPE Support services

| Description | Option Part Number |
|---|---|
| **Installation & startup services** | |
| HPE Install ProLiant DL38x(p) service | U4554E |
| HPE Installation and startup DL38x(p) service | U4555E |
| **Tech Care** | |
| HPE 5 Year Tech Care Essential DL385 Gen10 Plus Service | HV6P9E |
| HPE 5 Year Tech Care Essential wDMR DL385 Gen10 Plus Service | HV6Q2E |
| HPE 3 Year Tech Care Essential DL385 Gen10 Plus Service | HV6P7E |
| HPE 3 Year Tech Care Essential wDMR DL385 Gen10 Plus Service | HV6Q0E |
| **Proactive care** | |
| HPE 3 Year Proactive Care 24x7 DL385 GEN 10 PLUS Service | HK9Q4E |
| HPE 3 Year Proactive Care 24x7 with DMR DL385 GEN10 PLUS Service | HK9Q5E |
| HPE 3 Year Proactive Care 24x7 with CDMR DL385 GEN10 PLUS Service | HK9Q6E |
| HPE 3 Year Proactive Care Call-To-Repair DL385 GEN10 PLUS Service | HK9R5E |
| HPE 3 Year Proactive Care Call-To-Repair 24x7 with DMR DL385 GEN10 PLUS Service | HK9R6E |
| HPE 3 Year Proactive Care Call-To-Repair with CDMR DL385 GEN10 PLUS Service | HK9R7E |

**Click here to view a full listing of Support Services available for this server**.

# HPE Unique options

| Description | Option Part Number |
|---|---|
| HPE DL385 Gen10 Plus TAA-Compliant FIO enablement kit [1] | P14282-B21 |
| HPE DL38X Gen10 Plus 2-LFF tertiary FIO riser kit [2] | P14580-B21 |
| HPE DL38X Gen10 Plus x8/x8 tertiary FIO riser kit [3] | P14581-B21 |
| HPE DL38X Gen10 Plus x16x16 Slot1/2 riser FIO kit [4] | P14592-B21 |
| HPE DL38X Gen10 Plus x16 x16 Slot2/3 riser FIO kit [5] | P14599-B21 |
| HPE DL38X Gen10 Plus 8NVMe balanced FIO support bundle [6] | P19358-B21 |
| HPE DL385 Gen10 Plus 8NVMe direct support FIO bundle [7] | P22750-B21 |
| HPE DL385 Gen10 Plus 16NVMe balanced FIO support bundle [8] | P22751-B21 |
| HPE DL385 Gen10 Plus 24 NVMe U.3 balanced direct FIO enablement kit [9] | P25337-B21 |
| HPE DL385 Gen10 Plus 8NVMe U.2 balanced FIO enablement kit [10] | P25333-B21 |
| HPE DL385 Gen10 Plus 8NVMe U.2 direct FIO enablement kit [11] | P25334-B21 |
| HPE DL385 Gen10 Plus 16NVMe U.2 enablement direct FIO enablement kit [12] | P25335-B21 |
| HPE DL385 Gen10 Plus 24NVMe U.2 balanced direct FIO enablement kit [13] | P25336-B21 |
| HPE DL38X Gen10 8-SFF Front cage removal FIO option [14] | 873763-B21 |
| HPE DL38X Gen10 Plus Universal Media Bay Kit | P14609-B21 |

| Description | Option Part Number |
|---|---|
| HPE DL38X Gen10 Plus system insight display kit | P14611-B21 |
| HPE DL38X Gen10 Plus AROC to NVMe Adapter kit [15] | P14602-B21 |
| HPE DL38X Gen10 Plus High Performance Heat Sink Kit [16] | P14610-B21 |
| HPE DL38X Gen10 SFF Box1/2 cage/backplane kit | 826691-B21 |
| HPE DL38X Gen10 Plus 12Gb SAS expander card | P23388-B21 |

**NOTE**

1. This kit enables Trade Agreement Act (TAA) compliance. HPE offers multiple TAA compliant configurations to meet the needs of US Federal Government users. These products are either manufactured or substantially transformed in a designated country. TAA compliance is only provided when HPE options are included as part of factory integrated orders (CTO).
2. 
   - Supported only on 8 LFF & 12 LFF Models.
   - When this option is selected, secondary riser cannot be selected.
   - This option occupies tertiary riser slot.
3. 
   - Supports Full Height, Full-length cards and Full Height, Half- length cards.
   - Bus width x8, x16, x8, Connector Width x8, x16, x8.
4. 
   - Supports Full Height and Full length cards.
   - Bus width x16, x16, Connector Width x16, x16.
   - Slot 1 or 2 in Primary or Secondary location.
5. 

| Description | Option Part Number |
|---|---|

- Slot 1 or 2 in Primary or Secondary location.
- Supports Full Height and Full length cards.
- Bus width x16, x16, Connector Width x16, x16.
- Requires the option HPE Gen10 Plus Slot1 x16 Adder S2/3 Rsr Kit (P 14600-B21), to add additional x16 PCIe Gen4 in slot 1.

6. This is a trigger SKU having the below list of options bundled together. This bundle SKU needs to be selected in order to support 8 NVMe Dri ves with two processors
   - HPE DL Gen10 Plus 8NVMe CPU1/2 Cable kit (P22829-B21) .
   - HPE DL Gen10 Plus 8-SFF x4NVMe/SAS SC Kit (P14578-B21).
   - HPE DL Gen10 Plus Max Performance Fan (P14608-B21).
   - Requires 2nd Processor.
7. This is a trigger SKU having the below list of options bundled together. This bundle SKU needs to be selected in order to support 8 NVMe Dri ves with one processor only
   - HPE DL38X Gen10 Plus 8NVMe CPU1 Cable Kit (P22834-B21) .
   - HPE DL38X Gen10 Plus AROC to NVMe Adapter Kit (P14602-B21) .
   - HPE DL385 Gen10 Plus 8-SFF NVMe/SAS Box1-3 Smart Carrier Drive Cage Kit (P14578-B21).
   - HPE DL38X Gen10 Plus Max Performance Fan Kit (P14608-B21).
   - Requires only one processor.
8. This is a trigger SKU having the below options bundled together. This b undle SKU needs to be selected in order to support 16 NVMe drives.
   - HPE DL38X Gen10 Plus 16NVMe CPU1/2 Cable Kit (P22835-B21).
   - HPE DL38X Gen10 Plus AROC to NVMe Adapter Kit (P14602-B21).
   - HPE DL385 Gen10 Plus 8-SFF NVMe/SAS Box1-3 Smart Carrier Drive Cage Kit (P14578-B21).
   - HPE DL38X Gen10 Plus Max Performance Fan Kit (P14608-B21).
   - This requires 2nd Processor to be selected.

| Description | Option Part Number |
|---|---|

9. When this option is selected the following options MUST be populated i n the config:

   - HPE DL385 Gen10+ 8SFF NVMe/SAS SC Kit (P14578-B21) Qty-3
   - HPE DL38X Gen10+ AROC-NVMe Kit (P14602-B21) Qty-1
   - HPE DL385 Gen10+ x16 Re-Timer Card (P25527-B21) Qty-2
   - HPE DL38X Gen10+ Max Perf Fan Kit (P14608-B21) Qty-1
   - HPE DL38X Gen10+ 8NVMe CPU1/2 Cbl Kit (P22829-B21) Qty-1
   - HPE DL Gen10 Plus 16NVMe CPU1/2 Cable Kit (P22835-B21) Qty-1
   - HPE DL385 Gen10+ Re-Timer PRI Cable Kit (P25602-B21) Qty-2
   - HPE DL385 Gen10+ Re-Timer SEC Cable Kit (P25604-B21) Qty-2
   - Must select 2nd Processor
   - Must select secondary Riser
   - This Option and AROC Controller can not be selected together

   When this option is selected HPE 8SFF Front Remove SPEC Perf FIO (873763-b21) MUST be selected.

   When this option is selected HPE DL38X Gen10+ High Perf Heat Sink Kit (P14610-B21) MUST be selected.

10.

    - This is a trigger SKU having the below options bundled together. Th is bundle SKU needs to be selected in order to support 8 U.2 NVMe drives balanced across 2 processors

      When this option is selected the following options MUST be populat ed in the config:

      - HPE DL Gen10 Plus 8NVMe CPU1/2 Cable kit (P22829-B21) Qty-1.
      - HPE DL38X NVMe 8 SSD Express Bay (826689-B21) Qty-1.
      - HPE DL Gen10 Plus Max Perf Fan (P14608-B21) Qty-1.
      - Must select 2nd Processor.
    - This option and HPE DL38X Gen10+ Slot1 x16 Slot2/3 Kit (P14600-B2 1) CAN NOT be selected together.

| Description | Option Part Number |
| --- | --- |
| • When this option is selected HPE DL38X Gen10+ High Perf Heat Sin k Kit (P14610-B21) MUST be selected<br>11. This is a trigger SKU having the below options bundled together. This b undle SKU needs to be selected in order to support 8 U.2 NVMe drives.<br>When this option is selected the following options MUST be populated i n the config:<br>• HPE DL Gen10 Plus 8NVMe CPU1 Cable Kit (P22834-B21) Qty-1<br>• HPE Gen10 Plus AROC NVMe Adpt Kit (P14602-B21) Qty-1<br>• HPE DL38X NVMe 8 SSD Express Bay (826689-B21) Qty-1<br>• HPE DL Gen10 Plus Max Perf Fan (P14608-B21) Qty-1<br>This Option and AROC Controller can not be selected together.<br>When this option is selected HPE DL38X Gen10+ High Perf Heat Sink Kit (P14610-B21) MUST be selected.<br>When this option is selected, P14600-B21 CAN NOT be selected with P 14599-B21 Primary Riser kit.<br>12. This is a trigger SKU having the below options bundled together. This b undle SKU needs to be selected in order to support 16 U.2 NVMe drives.<br>When this option is selected the following options MUST to be populat ed in the config:<br>• HPE DL Gen10 Plus 16NVMe CPU1/2 Cable Kit (P22835-B21) Qty-1<br>• HPE Gen10 Plus AROC NVMe Adpt Kit (P14602-B21) Qty-1<br>• HPE DL38X NVMe 8 SSD Express Bay (826689-B21) Qty-2<br>• HPE DL Gen10 Plus Max Perf Fan (P14608-B21) Qty-1<br>• Must select 2nd Processor<br>This Option and AROC Controller can not be selected together.<br>When this option is selected HPE DL38X Gen10+ High Perf Heat Sink Kit (P14610-B21) MUST be selected.<br>This option and HPE DL38X Gen10+ Slot1 x16 Slot2/3 Kit (P14600-B21) CAN NOT be selected together. | |

| Description | Option Part Number |
|---|---|

13. This is a trigger SKU having the below options bundled together. This b undle SKU needs to be selected in order to support 24 U.2 NVMe drives .

    When this option is selected the following options MUST be populated i n the config:

    - HPE DL38X NVMe 8 SSD Express Bay (826689-B21) Qty-3.
    - HPE DL38X Gen10+ AROC-NVMe Kit (P14602-B21) Qty-1
    - HPE DL385 Gen10+ x16 Re-Timer Card (P25527-B21) Qty-2
    - HPE DL38X Gen10+ Max Perf Fan Kit (P14608-B21) Qty-1
    - HPE DL38X Gen10+ 8NVMe CPU1/2 Cbl Kit (P22829-B21) Qty-1
    - HPE DL Gen10 Plus 16NVMe CPU1/2 Cable Kit (P22835-B21) Qty-1
    - HPE DL385 Gen10+ Re-Timer PRI Cable Kit (P25602-B21) Qty-2
    - HPE DL385 Gen10+ Re-Timer SEC Cable Kit (P25604-B21) Qty-2
    - Must select 2nd Processor
    - Must select secondary Riser

    This Option and AROC Controller can not be selected together.

    When this option is selected HPE DL38X Gen10+ High Perf Heat Sink Kit (P14610-B21) MUST be selected.

    This option and HPE DL38X Gen10+ Slot1 x16 Slot2/3 Kit (P14600-B21) CAN NOT be selected together.

14.
    - This is a factory integrated only option.
    - Will remove the Primary 8-SFF cage in Box 3 of the 8-SFF and replac e with a Box blank.

15. Used to support upto 16 NVMe drives with Modular Controller (AROC).
16. Processor kits above 180 W include a High Performance Heatsink.

# Software Compatibility

**Subtopics**

**OS Compatibility**
**Software Compatibility**

# OS Compatibility

| Feature | Description |
| --- | --- |
| **Operating Systems (OS) and virtualization software support for ProLiant servers** | • Windows Server 2016 (Most recent version)<br>• Windows Server 2019 (Most recent version)<br>• VMware ESXi 6.5 U3<br>• VMware ESXi 6.7 U3<br>• SUSE Linux Enterprise Server (SLES) 12 SP4<br>• SUSE Linux Enterprise Server (SLES) 15 SP1<br>• Red Hat Enterprise Linux (RHEL) |

**NOTE**

**Click here to access for more information on HPE Servers Support & Certification Matrices.**

**Click here to access for more information on Server OS and Virtualization Software**.

## Software Compatibility

- Active Health System
- Active Health System Viewer
- Smart Update
- iLO Amplifier Pack
- HPE iLO Mobile Application
- RESTful Interface Tool
- Scripting Tools
- HPE OneView Standard
- HPE Systems Insight Manager (HPE SIM)

## Useful Links

| Description | Direct links |
|---|---|
| Alerts | **Click here to view " Advisories, Alerts and Bulletins and Notices of HPE ProLiant DL385 Gen10 Plus server".** |
| Drivers and Software | **Click here to view "Drivers and software of HPE ProLiant DL385 Gen10 Plus server".** |
| Knowledge article | **Click here to view" Knowledge articles, Troubleshooting, FAQ, How to , Information document of HPE ProLiant DL385 Gen 10 Plus server".** |
| Manuals | **Click here to view "Manuals, Guides,Release notes, Troubleshooting articles and other related document of HPE ProLiant DL385 Gen10 Plus server".** |
| Videos | **Click here to access " Videos of Remove/ Replace, Setup/Installation, Troubleshoo** |

**ting, Management/Operations of HPE Pro Liant DL385 Gen10 Plus server".**