HPE ProLiant DL385 Gen10 Server - Product Information Reference

Part Number:
Published:
Edition:

HPE ProLiant DL385 Gen10 Server - Product Information Reference

Abstract

Part Number:
Published:
Edition:

© Copyright –

Notices

The information contained herein is subject to change without notice. The only warranties for Hewlett Packard Enterprise products and services are set forth in the express warranty statements accompanying such products and services. Nothing herein should be construed as constituting an additional warranty. Hewlett Packard Enterprise shall not be liable for technical or editorial errors or omissions contained herein.

Confidential computer software. Valid license from Hewlett Packard Enterprise required for possession, use, or copying. Consistent with FAR 12.211 and 12.212, Commercial Computer Software, Computer Software Documentation, and Technical Data for Commercial Items are licensed to the U.S. Government under vendor's standard commercial license.

Links to third-party websites take you outside the Hewlett Packard Enterprise website. Hewlett Packard Enterprise has no control over and is not responsible for information outside the Hewlett Packard Enterprise website.

Acknowledgments

Intel®, Itanium®, Optane™, Pentium®, Xeon®, Intel Inside®, and the Intel Inside logo are trademarks of Intel Corporation in the U.S. and other countries.

AMD and the AMD EPYC™ and combinations thereof are trademarks of Advanced Micro Devices, Inc.

Microsoft® and Windows® are either registered trademarks or trademarks of Microsoft Corporation in the United States and/or other countries.

Adobe® and Acrobat® are trademarks of Adobe Systems Incorporated.

Java® and Oracle® are registered trademarks of Oracle and/or its affiliates.

UNIX® is a registered trademark of The Open Group.

All third-party marks are property of their respective owners.

Revision history

Part number	Publication date	Edition	Summary of changes

Table of contents

Overview

- Summary 6
  - Product description 6
  - What's new 6
- Standard Models 7
  - New RoHS compliant part numbers 7
  - Pre-Configured models 7
  - Configure-To-Order (CTO) models 9
- Product features 9

Specifications

- Physical specifications 19
- Environmental specifications 20
- Electrical specifications 21
- Safety certifications 23

Compatibility/Supportability

- Spare Parts 23
  - New model specific parts lists 24
  - Mechanical components 24
  - System components 28
  - Server options 38
- Option Parts 51
  - New model specific parts lists 52
  - Processor 52
  - Memory 55
  - Power supplies 56
  - HPE PCIe workload accelerator 57
  - HPE Computation and graphics accelerators 57
  - Additional factory integratable options 59
  - Additional options for factory integration from core 60
  - HPE Smart IO 62
  - HPE Optical drives 63
  - HPE Drives 63
  - HPE Networking 78
  - FlexibleLOM adapters 79

HPE InfiniBand 80
HPE I/O expansion options 81
Embedded management 82
HPE Converged infrastructure management software 84
HPE PCIe workload accelerator options 85
HPE Security 85
Controllers 86
Cable 87
HPE Disk based backup 88
Rail kits 88
HPE USB and SD options 89
HPE Support services 89
Product related documents 90
OS Compatibility 90
Software Compatibility 91
Useful Links 91

Summary

Subtopics

Product description
What's new

Product description



The HPE ProLiant DL385 Gen10 Server is redefining price/performance with the new math for virtualized compute. Powered by the latest AMD EPYC 7xx2 Series Processors, the HPE ProLiant DL385 Gen10 Server offers greater processing power and faster memory speeds upto 2933 MT/s. This 2P, 2U server has been designed with flexibility while delivering a high maximum core count and large memory footprint. Choose this purpose-built platform for virtualization.

What's new

- New 2933 Memory DIMMs with capacity upto 128GB.
- New disk cartridge options
- Supports the next generation AMD EPYC 7xx2 series processor with double the core density compared to the previous generation and memory speeds up to 2933 MT/s.
- Embedded 4x 1 GbE LOM is not supported with 7xx2 series processors.
- Two new SMB Base SKU (BTO) offerings
- New SAS & SATA Solid State Drive (SSD)
- Support for new GPU's - HPE NVIDIA Quadro RTX6000 Graphics Accelerator and HPE NVIDIA Quadro RTX8000 Graphics Accelerator.

- New NVME SSD

Standard Models

Subtopics

New RoHS compliant part numbers
Pre-Configured models
Configure-To-Order (CTO) models

New RoHS compliant part numbers

To find the latest RoHS compliance information, please use the HPE PartSurfer (**Click here to visit the HPE PartSurfer website**) and click on one of the linked model numbers. When locating RoHS information in PartSurfer, you can use the Options part number for the components, the sales order number for a system that the component is used in, or the Spare part number for a specific part. You can find the sales order numbers and Option part numbers in the Product QuickSpecs.

Pre-Configured models

Description	Model Number
Entry models	
HPE ProLiant DL385 Gen10 7262 3.2 GHz 8-core 1 P 16GB-R 12 Large Form Factor (LFF) 800 W RPS Server	P16690-B21 **Click here to obtain the parts list of this model**.
	P16690-291 **Click here to obtain the parts list of this model**.
HPE ProLiant DL385 Gen10 7262 3.2 GHz 8- core 1P 16GB-R 8 Small Form Factor (SFF) 800 W RPS Server	P16692-B21 **Click here to obtain the parts list of this model**.
	P16692-291 **Click here to obtain parts list of this model**.

Description	Model Number
HPE ProLiant DL385 Gen10 7252 3.1 GHz 8-core 1 P 16GB-R 8-SFF 500 W PS Server	P26897-B21 **Click here to obtain the parts list of this model**.
	P26897-291 **Click here to obtain the parts list of this model**.
Performance models	
HPE ProLiant DL385 Gen10 7302 3.0 GHz 16- core 1P 16GB-R 8-SFF 800 W RPS Server	P16694-B21 **Click here to obtain the parts list of this model**.
	P16694-291 **Click here to obtain the parts list of this model**.
HPE ProLiant DL385 Gen10 7282 2.8 GHz 16-core 1P 32GB-R 8-SFF 800 W PS Server	P26898-B21 **Click here to obtain the parts list of this model**.
	P26898-291 **Click here to obtain the parts list of this model**.
Solution model	
HPE ProLiant DL385 Gen10 7452 2.2 GHz 32- core 1P 16GB-R 24-SFF 800 W RPS Server	P16693-B21 **Click here to obtain the parts list of this model**.
	P16693-291 **Click here to obtain the parts list of this model**.

NOTE:

Country Code Key:

- xx1 = B21 Worldwide
- xx1 = 291 Japan

The - B21 WW SKU is to be ordered in all countries other than Japan.

Configure-To-Order (CTO) models

Description	Model Number
HPE ProLiant DL385 Gen10 8-LFF CTO Server	878615-B21
HPE ProLiant DL385 Gen10 8-LFF Trade Agreement Act (TAA) compliant CTO Server	878619-B21 **Click here to obtain the part lists of this model**.
HPE ProLiant DL385 Gen10 12-LFF CTO Server	878614-B21 **Click here to obtain the part lists of this model**.
HPE ProLiant DL385 Gen10 12-LFF TAA-Compliant CTO Server	878618-B21 **Click here to obtain the part lists of this model**.
HPE ProLiant DL385 Gen10 8-SFF CTO Server	878612-B21 **Click here to obtain the part lists of this model**.
HPE ProLiant DL385 Gen10 8-SFF TAA-Compliant CTO Server	878616-B21 **Click here to obtain the part lists of this model**.
HPE ProLiant DL385 Gen10 24-SFF CTO Server	878613-B21 **Click here to obtain the part lists of this model**.
HPE ProLiant DL385 Gen10 24-SFF TAA-Compliant CTO Server	878617-B21 **Click here to obtain the part lists of this model**.

NOTE:

1. Direct link to the parts list will be added as soon as it becomes available.

Product features

Feature	Description
Form factor	2U rack
Chassis types [1]	• 8 SFF with optional universal media bay and optional SFF or NVMe drive bay options. • 24 SFF bay with additional 6 SFF rear drive bay option to total 30 SFF drives. • 8 LFF with universal media bay • 12 LFF with optional 4 LFF mid-plane and optional 3LFF + 2 SFF rear drive bay to total 19 LFF drives + 2 SFF drives.
System fans [2]	Standard - Fan types included
Processors [3]	Up to 2 of the following depending on model

AMD EPYC Processor	Cores	Base Frequency	Max Frequency	Max Memory	Wattage	Cache	Memory
EPYC 7702	64	2.0 GHz	3.35 GHz	2TB	200 W	256MB	2933 MT/S
EPYC 7552	48	2.2 GHz	3.3 GHz	2TB	200 W	192MB	2933 MT/S
EPYC 7532	32	2.3 GHz	3.2 GHz	4TB	200 W	256MB	3200 MT/S
EPYC 7502	32	2.5 GHz	3.35 GHz	2TB	180 W	128MB	2933 MT/S
EPYC 7452	32	2.35 GHz	3.35 GHz	2TB	155 W	128MB	2933 MT/S
EPYC 7402	24	2.8 GHz	3.35 GHz	2TB	180 W	128MB	2933 MT/S
EPYC 7352	24	2.3 GHz	3.2 GHz	2TB	155 W	128MB	2933 MT/S
EPYC 7302	16	3.0 Ghz	3.3 GHz	2TB	155 W	128MB	2933 MT/S
EPYC 7282	16	2.8 GHz	3.2 GHz	4TB	120 W	64MB	3200 MT/S

Feature	Description

AMD EPYC Processor	Cores	Base Frequency	Max Frequency	Max Memory	Wattage	Cache	Memory
EPYC 7272	12	2.9 GHz	3.2 GHz	4TB	120 W	64MB	3200 MT/S
EPYC 7252	8	3.1 GHz	3.2 GHz	4TB	120 W	64MB	3200 MT/S
EPYC 7262	8	3.2 GHz	3.4 GHz	2TB	155 W	128MB	2933 MT/S

NOTE:

All AMD EPYC processors can support up to 2TB of memory each.

Chipset	No chipset - System on Chip (SoC) design
On system management chipset	HPE Integrated Lights-Out (HPE iLO) 5 ASIC
Memory [4]	

Type		**HPE DDR4 SmartMemory, Registered (RDIMM), Load Reduced (LRDIMM)**
DIMM slots available	32	16 DIMM slots per processor, 8 channels per processor, 2 DIMMs per channel
Maximum capacity (LRDIMM)	4.0TB	32 x 128GB LRDIMM - 2666 MHz
Maximum capacity (RDIMM)	1.0TB	32 x 32GB RDIMM - 2666 MHz

AMD EPYC 7xx2 Series Processor Family

Maximum capacity (RDIMM)	2.0TB	32 x 64GB RDIMM - 2933 MHz -1 DPC

Feature	Description
	AMD EPYC 7xx2 Series Processor Family
	Maximum capacity (LRDIMM) 4.0TB 32 x 128GB RDIMM - 2933 MHz -1 DPC

Expansion slots [5]

Slot#	Technology	Bus Width	Connector Width	Slot Form Factor	Notes
1	PCIe 3.0	X8	X8	Full-Height, Full-Length slot	Proc 1
2	PCIe 3.0	X16	X16	Full-Height, Full-Length slot	Proc 1
3	PCIe 3.0	X8	X8	Full-Height, Half-Length slot	Proc 1

Slot#	Technology	Bus Width	Connector Width	Slot Form Factor	Notes
1	PCIe 3.0	X8	X8	Full-Height, Full-Length slot	Proc 2
2	PCIe 3.0	X16	X16	Full-Height, Full-Length slot	Proc 2
3	PCIe 3.0	X8	X8	Full-Height, Half-Length slot	Proc 2

Slot#	Technology	Bus Width	Connector Width	Slot Form Factor	Notes
1	PCIe 3.0	X8	X8	Full-Height, Full-Length slot	Proc 2

Feature	Description					
	Slot#	**Technology**	**Bus Width**	**Connector Width**	**Slot Form Factor**	**Notes**
	2	PCIe 3.0	X8	X8	Full-Height, Full-Length slot	Proc 2

Storage controllers	The Gen10 controller naming framework has been updated to simplify identification as depicted below. For a more detailed breakout of the available Gen10 Smart Array controllers visit the HPE Smart Array Gen10 Controllers Data Sheet.	
	Software RAID	HPE Smart Array S100i SR Gen10 SW RAID
	Essential RAID controller	• HPE Smart Array E208i-a SR Gen10 controller • HPE Smart Array E208i-p SR Gen10 controller • HPE Smart Array E208e-p SR Gen10 controller
	Performance RAID controller [6]	• HPE Smart Array P408i-a SR Gen10 controller • HPE Smart Array P408i-p SR Gen10 controller • HPE Smart Array P408e-p SR Gen10 controller • HPE Smart Array P816i-a SR Gen10 controller • HPE Smart Array P824i-p MR Gen10 Controller
Internal storage devices	**Optical drive** • Ships standard in performance models • Optional: DVD-ROM, DVD-RW **Hard drive** • None ship standard	

Maximum internal storage	**Internal Storage**	**Capacity**	**Configuration**
	Hot Plug SFF SAS	72.0TB	24+6 x 2.4TB (With optional rear SFF drive cage)

Feature	Description

Internal Storage	Capacity	Configuration
Hot Plug SFF SATA	60.0TB	24+6 x 2TB (With optional SFF drive cage)
Hot Plug LFF SAS	296.6TB	12+4+3 x 12TB + 2 x 15.3TB (With optional mid –tray and rear LFF drive cage, plus 2 SFF SSD rear)
Hot Plug LFF SATA	296.6TB	12+4+3 x 12TB + 2 x 15.3TB (With optional mid –tray and rear LFF drive cage, plus 2 SFF SSD rear)
Hot Plug SFF SAS SSD	459TB	24+6 x 15.3TB (With optional rear SFF drive cage)
Hot Plug LFF SATA SSD	67.08TB	12+4+3 x 1.92TB + 2 x 15.3TB (With optional mid –tray and rear LFF drive cage, plus 2 SFF SSD rear)
Hot Plug SFF SATA SSD	230.4TB	24+6 x 7.68TB (With optional 2SFF drive cage)
Hot Plug SFF NVMe PCIe SSD	368.64TB NVMe	24 x 15.36TB NVMe

Power supply

- HPE 500 W flexible slot platinum Hot-Plug low halogen power supply kit
- HPE 800 W flexible slot platinum Hot-Plug low halogen power supply kit
- HPE 1600 W flexible slot platinum Hot-Plug low halogen power supply kit

Interfaces [7]

Serial	Optional, rear
Display port	1 (SFF 1 front, optional VIA universal media bay, 882097-B21), 8 LFF chassis standard
FlexibleLOM network ports	4 x 1Gb ports shipping standard with optional FlexibleLOM or stand up card

Feature	Description	
	Serial	**Optional, rear**
	HPE iLO remote management network port	1Gb Dedicated
	Front iLO service port	1 Standard (Not available on 12 LFF chassis or when SID is ordered, note iLO dongle required, 880123-B21)
	Micro SD slot	1 Micro SD
	USB 3.0	Up to 5 total: 1 front, 2 rear, 2 internal (Secure), 2 optional USB 2.0 front VIA universal media bay or standard on 8LFF chassis
	Systems Insight Display (SID)	Optional
Industry standard compliance	• ACPI 6.1 compliant • PCIe 3.0 compliant • WOL support • Microsoft logo certifications • PXE support • VGA/display port • USB 3.0 compliant (Internal) • USB 2.0 compliant (External ports VIA SUV) • Energy star • SMBIOS 3.1 • Unified Extensible Firmware Interface (UEFI) 2.6 • Redfish API • IPMI 2.0 • Secure digital 2.0 • Advanced Encryption Standard (AES) • Triple Data Encrytion Standard (3DES)	

Feature	Description
	• SNMP v3 • TLS 1.2 • European Union (EU) eco-design regulations for server and storage products, known as Lot 9, go into effect on March 1st, 2020. Among other requirements, for servers this dire ctive establishes power thresholds for idle state, as well as efficiency and performance in active state which vary among configurations. • DMTF Systems Management Architecture for Server Hardware Command Line Protocol (SMASH CLP) • Active directory v1.0 • ASHRAE A3/A4
Graphics	**Integrated video standard** • Video modes up to 1920 x 1200 - 60 Hz (32 bp) • 16MB video memory **HPE iLO 5 on system management memory** • 32MB flash • 4Gb DDR 3 with ECC protection
HPE Server UEFI/legacy ROM [8]	UEFI is an industry standard that provides better manageability and more secured configurat ion than the legacy ROM while interacting with users server at boot time. HPE ProLiant Gen1 0 servers have a UEFI Class 2 implementation and support both UEFI Mode (Default) and leg acy BIOS mode. **UEFI enables numerous new capabilities specific to HPE ProLiant servers such as:** • Secure boot and secure start enable for enhanced security • Operating System (OS) specific functionality • Support for > 2.2TB (Using GPT) boot drives • USB 3.0 stack • Embedded UEFI shell • Mass configuration deployment tool using iLO RESTful API that is Redfish API conforma nt • PXE boot support for IPv6 networks • Workload profiles for simple performance optimization

Feature	Description
	UEFI boot mode only: • TPM 2.0 support • NVMe boot support • Platform Trust Technology (PTT) can be enabled • iSCSI software initiator support • HTTP/HTTPs boot support as a PXE alternative • Boot support for option cards that only support a UEFI option ROM
Embedded management	• HPE iLO • UEFI • Intelligent provisioning • iLO RESTful API
Security	• UEFI secure boot and secure start support • Immutable silicon root of trust • FIPS 140-2 validation (iLO 5 certification in progress) • Common criteria certification (iLO 5 certification in progress) • Configurable for PCI DSS compliance • AES and 3DES on browser • Support for Commercial National Security Algorithms (CNSA) • Tamper-Free updates - components digitally signed and verified • Secure recovery - recover critical firmware to known good state on detection of compromised firmware • Ability to rollback firmware • Secure erase of NAND/User data • Trusted Platform Module (TPM) 1.2 option • TPM 2.0 option • Bezel locking kit option

Feature	Description
	• Chassis intrusion detection option
Server management	• HPE iLO advanced • HPE iLO advanced premium security edition • HPE OneView advanced • HPE Insight Cluster Management Utility (CMU) • HPE InfoSight for servers
Accelerator and GPU information	• Hewlett Packard Enterprise supports various accelerators on select HPE Proliant servers to support different workloads. • The accelerators enable seamless integration of GPU computing with HPE ProLiant servers for High-Performance computing, large data center graphics, deep learning and virtual desktop deployments. • These accelerators deliver all of the standard benefits of GPU computing while enabling maximum reliability and tight integration with system monitoring and management tools such as HPE Insight CMU.
One Config Simple (SCE)	SCE is a guided Self-Service tool to help sales and Non-Technical people provide end users with initial configurations in 3 to 5 minutes. Then send the configuration on for configuration help or use in the existing ordering processes. If user require **custom** rack configuration or configuration for products not available in SCE, contact Hewlett Packard Enterprise end user business center or an authorized partner for assistance **Click here to access the page for One Config Simplified (OCS)**.

NOTE:

1. The 3 LFF rear drive box will consume space for the secondary and tertiary riser
   - The 8 and 12 LFF chassis also supports the 2 SFF rear drive box which allows for the user to attach a secondary or tertiary riser.
   - The 8 NVMe drive option (826689-B21) can only be leveraged in the SFF chassis and replaces Box 1, 2 or 3.
   - The premium cage (826690-B21, 6 SAS/SATA+2 NVMe) can only be leveraged in the SFF chassis and replaces Box 1, 2 or 3.
   - The universal media bay (882097-B21) not available with the LFF chassis or the 24 SFF front end and can only be populated in Box 1.
   - The 8 SFF can be upgraded with additional 8SFF drive box to total 16 or 24 SFF drives. For optimal upgrade Box 2 should be populated second, with Box 1 the last to

Feature	Description

be populated for a field upgrade to 24 SFF. For Configure-To-Order (CTO) builds requiring 24 SFF use the 24 SFF chassis (868704-B21). Note a field upgrade to 24 SFF will require a high performance fan kit (867810-B21).

- All models come with the S100i Smart Array controller with embedded software RAID support for the 2 embedded M.2 drive connectors on the system board.

2. 1P models ship with 4 standard fans. The second processor option kit contains 2 additional fans

   - The 12 LFF and 24 SFF chassis ship with 6 high performance fans as standard.
   - The 8LFF chassis ships with 6 standard fans as standard.
   - High performance fan kit is available to meet ambient temperature environments.
   - High performance fan kits are required for rear drives, graphics card or NVMe configurations.

3. All AMD EPYC processors can support up to 2TB of memory each.
4. The maximum memory speed is limited by the processor selection

   - Mixing of RDIMM and LRDIMM memory is not supported.
   - 128GB support is available 1H2018

5. Bus width Indicates the number of physical electrical lanes running to the connector.
6. Performance RAID Controllers require the HPE Smart storage battery (P01366-B21) which is sold separately.
7. The Micro SD slot is not a Hot-Pluggable device. End users should not attempt to plug an SD card into the SD slot while the server is powered.

   - Not shipping as standard. Available as a CTO option or as a field upgrade (826703-B21).

8. The UEFI system utilities tool is analogous to the HPE ROM-Based Setup Utility (RBSU) of legacy BIOS

   Click here to access the page for UEFI.For UEFI boot mode, boot environment and OS image installations should be configured properly to support UEFI.UEFI FIO setting (758959-B22) can be selected to configure the system in legacy mode in the factory for the HPE ProLiant Gen10 server.

Physical specifications

Specification	Description
Dimensions (H x W x D)	• **Small Form Factor (SFF) drives:** 8.73 x 44.55 x 67.94 cm (3.44 x 17.54 x 26.75 in) • **Large Form Factor (LFF) drives:** 8.73 x 44.55 x 73.02 cm (3.44 x 17.54 x 28.75 in)
Weight (Approximate)	• **Minimum:** 8 SFF chassis with 1x SFF HDD and 7 HDD blanks, 2x Drive Bay blanks, 1x processor including standard heatsink, 1x power supply (Plus blank), 1x Smart Array, 1x Riser installed, cables for the above. ◦ 14.9 kg (32.75 lb) • **Maximum:** 12 LFF hard drives (No rear drives), 2x processors, 2x power supplies, 1x Smart Array, 2x Risers installed. ◦ 23.6 kg (51.5 lb)
RTC accuracy	• 50 ppm

Environmental specifications

Specification	Description
Standard operating temperature	10° to 35°C (50° to 95°F)
Extended ambient temperature	5° to 7(41° to 50°F)
Non operating temperature	-30° to 60°C (-22° to 140°F) Maximum rate of change is 20°C/hr (36°F/hr)
Operating relative humidity	8% to 90%
Non operating relative humidity	5% to 95%
Operating altitude	3050 m (10,000 ft)

Specification	Description
Non operating altitude	9144 m (30,000 ft)
Acoustic noise	Listed are the declared A-Weighted sound power levels (LWAd) and de clared average bystander position A-Weighted soundpressure levels (L pAm) when the product is operating in a 23°C ambient environment. N oise emissions were measured in accordancewith ISO 7779 (ECMA 74) and declared in accordance with ISO 9296 (ECMA 109).

Idle	LWAd	LpAm
	4.8 B Entry	37 dBA Entry
	4.4 B Base	31 dBA Base
	4.6 B Perf	31 dBA Perf
Operating	**LWAd**	**LpAm**
	4.8 B Entry	37 dBA Entry
	4.4 B Base	31 dBA Base
	4.6 B Perf	31 dBA Perf

NOTE:

- Acoustics levels presented here are generated by the test configuration only. Acoustics levels will vary depending on system configuration. Values are subject to change withou t notification and are for reference only.
- Product conformance to cited product specifications is based on sample (Type) testing, evaluation, or assessment. This product or family of products is eligible to bear the app ropriate compliance logos and statements.
- The listed sound levels apply to standard shipping configurations. Additional options m ay result in increased sound levels.

Electrical specifications

Specification	Description
Rated line voltage	• 100 to 120 V ac • 200 to 240 V ac
BTU rating	**Maximum** • **For 800 W power supply** ◦ 3207 BTU/hr (At 100 V ac) ◦ 3071 BTU/hr (At 200 V ac) ◦ 3112 BTU/hr (At 240 V ac) for China only • **For 500 W power supply** ◦ 1979 BTU/hr (At 100 V ac) ◦ 1911 BTU/hr (At 200 V ac) ◦ 1965 BTU/hr (At 240 V ac) for China only
Rated Steady-State power	• **For 1400 W power supply** ◦ 1400 W (At 240 V ac) • **For 800 W power supply:** ◦ 800 W (At 100 V ac) ◦ 800 W (At 240 V ac) ◦ 800 W (At 240 V ac) input for China only • **For 500 W power supply:** ◦ 500 W (At 100 V ac) ◦ 500 W (At 240 V ac) ◦ 500 W (At 240 V ac) input for China only
Maximum peak pow er	• **For 1400 W power supply:** ◦ 1400 W (At 200 to 240 1 V ac) ◦ 1400 W (At 240 V ac) input for China only

Specification	Description

	• **For 800 W power supply:**
	  ◦ 800 W (At 100 to 127 V ac)
	  ◦ 800 W (At 200 to 240 1 V ac)
	  ◦ 800 W (At 240 V ac) input for China only
	• **For 500 W power supply:**
	  ◦ 500 W (At 100 to 127 V ac)
	  ◦ 500 W (At 200 to 240 V ac)
	  ◦ 500 W (At 240 V ac) input for China only

Safety certifications

Specifications	Description
Emissions Classification (EMC) - Regulatory information	To view the regulatory information for users product, view the safety and compliance information for Server, Storage, Power, Networking, and Rack Products, available at the **Hewlett Packard Enterprise Support Center**.

Spare Parts

Subtopics

New model specific parts lists
Mechanical components
System components
Server options

New model specific parts lists

IMPORTANT: To obtain current part number information for a specific product model, use the Standard Models page for this product family.

.

- The product Standard Models page now links the model SKU numbers to the spare parts list for each model found on the HPE PartSurfer web site. (To report missing or incorrect parts information in PartSurfer, please use the "Contact us" and "Missing or incorrect data" links within the PartSurfer web site utility.)
- To look up RoHS-compliant information in PartSurfer, use the component's option part number or the sales order number for a system in which the component is used (Available in the QuickSpecs or Standard Models page).

Mechanical components

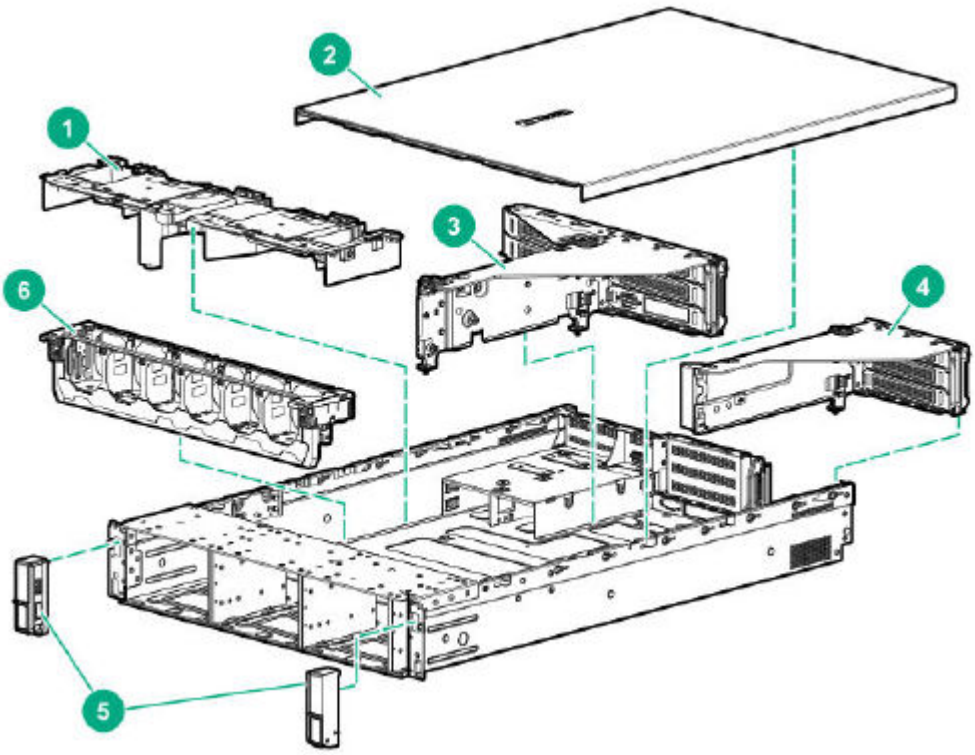

Item	Description
1	Air baffle.
2	Access panel.
3	Tertiary PCI riser cage.
4	Primary and secondary PCI riser cage.
5	Chassis ear.
6	Fan cage.
7	2U bezel [1]
8	Rail kit [1]
9	Miscellaneous blank kits [1]

NOTE:

1. Not shown in the image

Air baffle

Description	Spare Part Number
Baffle system	P00659-001

Access panel

Description	Spare Part Number
Top cover Small Form Factor (SFF) With/label (W/LBL)	P00660-001
Top cover Large Form Factor (832984-001) W/LBL	P00661-001

Tertiary PCI riser cage

Description	Spare Part Number
Cage bfly riser tertiary	P01087-001

Primary and secondary PCI riser cage

Description	Spare Part Number
Cage PCI riser x16 x16 S2/3	P01088-001

Chassis ear

Description	Spare Part Number
Standard SFF left and right ear kit	P01464-001
EAR Power/UID LFF right+ left kit	P01465-001

Fan cage

Description	Spare Part Number
Fan cage - supports 6 fans	875055-001

2U bezel

Description	Spare Part Number
2U bezel	875065-001

Rail kit

Description	Spare Part Number
Easy install rack mount slide rail kit - For 2U high SF F model servers	744114-001
Easy install rack mount slide rail kit - For 2U high LF F model servers	744115-001

Description	Spare Part Number
Cable management arm kit - Guides the power and i nterface cables to prevent binding when the server i s slide in and out of the rack - Mounts to the rear of t he rack	744116-001

Miscellaneous blank kits

Front miscellaneous blanks kit

Description	Spare Part Number
Miscellaneous blanks kit front	875069-001

Rear miscellaneous blanks kit

Description	Spare Part Number
Miscellaneous blanks kit rear	875067-001

Rear 2SFF/miscellaneous blanks and bracket kit

Description	Spare Part Number
Miscellaneous blanks/bracket kit 2- SFF rear	875068-001

Fan blank, smart storage battery latch and PCIe retainer kit

Description	Spare Part Number
Blank kit includes - Fan and latch M.cell+PCIe/T. RTN Rs	875066-001

Optical drive blank

Description	Spare Part Number
Description Spare Part Number Optical drive blank (Cover) - To fill an empty optical drive bay	707300-001

System components

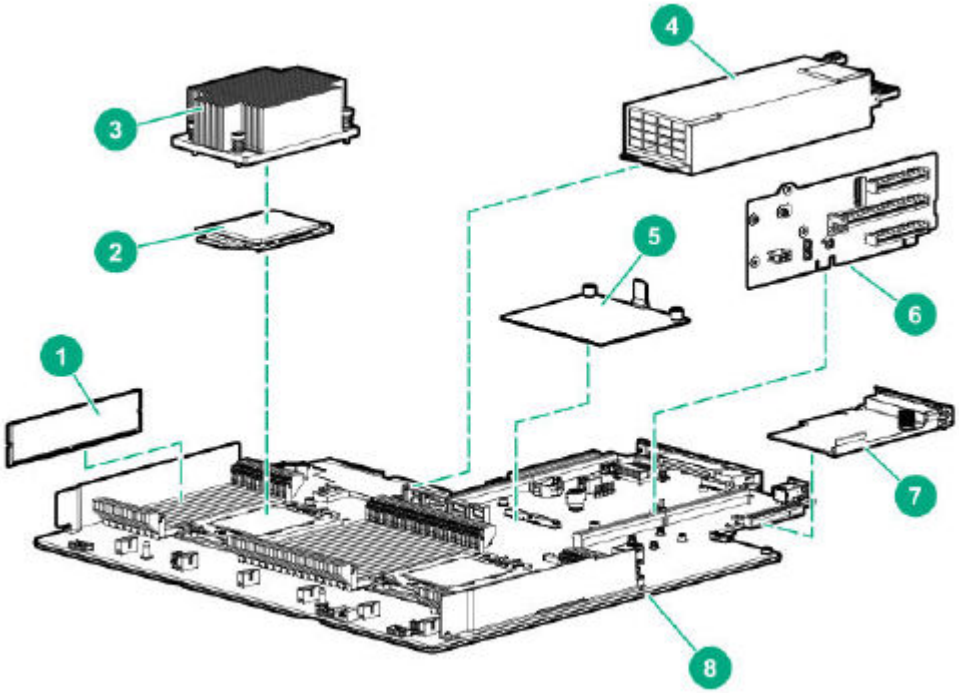

Item	Description
1	**Dual In-line Memory Module (DIMM)**.
2	**Processor**.
3	Heatsink.
4	Power supply.
5	Smart Array Controller.
6	**PCI riser board/Ethernet adapter**.
7	Network adapter.
8	System board.
9	LFF front I/O board.

Item	Description
10	System battery [1]

NOTE:

1. Not shown in the image

DIMM

Description	Spare Part Number
2666 MT/s DIMMs	
8GB PC4-2666V-R, Synchronous Dynamic Random Access Memory (SDRAM), Dual Data Rate (DDR4) mode, DIMM, organized as 1Gx72	868841-001
16GB PC4-2666V-R, SDRAM, DDR4 mode, DIMM, organized as 2G x 72	868842-001
16GB PC4-2666V-R - registered SDRAM, DDR4 mode, DIMM organized as 2G x 72	870840-001
16GBPC4-2666V-R, registered SDRAM, DDR4 mode, DIMM, organized as 4G x 72	868843-001
64GB PC4-2666V-L, Load Reduced Dual In-line Memory Module (LRDIMM), SDRAM,DDR4 mode, DIMM, organized as 8G x 72	868844-001
64GB PC4-2666V-L, LRDIMM, SDRAM, DDR4 mode, DIMM, organized as 16G x 72	868845-001
2933 MT/s DIMMs	
HPE 8GB (1 x 8GB) single rank x8 DDR4-2933 CAS-21-21-21 registered smart memory kit	P19255-001
HPE 16GB (1 x 16GB) dual rank x8 DDR4-2933 CAS-21-21-21 registered smart memory kit	P19253-001
DIMM,16GB,2G x 4	P19254-001
DIMM,32GB PC4-2933Y-R,2G x 4	P19252-001

Description	Spare Part Number
HPE 64GB (1 x 64GB) quad rank x4 DDR4-2933 CAS-21-21-21 load reduced smart memory kit	P19251-001
HPE 64GB (1 x 64GB) dual rank x4 DDR4-2933 CAS-21-21-21 registered smart memory kit	P19250-001
HPE 128GB (1 x 128GB) quad rank x4 DDR4-2933 CAS-24-21-21 load reduced smart memory kit	P19402-001

Processor

Description	Spare Part Number
AMD EPYC 7251 Eight-Core 64-bit processor - 2.10 GHz , 32MB Level-3 cache, 120 W Thermal Design Power (TDP)	882443-001
Central Processing Unit (CPU) EPYC 7281 16C 2.1G 170 W	P00657-001
AMD EPYC 7301 Sixteen-Core 64-bit processor - 2. 20 GHz , 64MB Level-3 cache, 155 W TDP	P00657-001
AMD EPYC 7301 Sixteen-Core 64-bit processor - 2. 20 GHz, 32 Threads, Memory 2400/2600 MHz, 64M B Level-3 cache, 155/170 W TDP	P00655-001
CPU EPYC 7351 16C 2.4G 155 W	P00654-001
AMD EPYC 7401 Twenty-Four-Core 64-bit processo r - 2.0 GHz , 64MB Level-3 cache, 155 W TDP	P00653-001
AMD EPYC 7451 Twenty-Four-Core 64-bit processo r - 2.3 GHz , 64MB Level-3 cache, 180 W TDP	P00652-001
CPU EPYC 7501 32C 2.0G 155 W	P00651-001
CPU EPYC 7551 32C 2.0G 180 W	P00650-001
CPU EPYC 7601/2.2G,32C,180 W	882447-001
DIMM,128GB PC4-2933Y-L,4Gx4	P19402-001
AMD EPYC 7261 Eight-Core 64-bit processor - 2.50 GHz, 16 threads, memory 2400/2666 MHz, 64MB l evel-3 cache, 155/170 W TDP	P05452-001

Description	Spare Part Number
CPU Naples EPYC 7371 16C 3.1G 200 W	P12475-001
AMD EPYC 7xx2 processor	
AMD EPYC 7702 64 core processor - 2.0 GHz (Socket count: 2P, 128 threads, 256MB L3 cache, 200 W TDP	P17332-001
AMD EPYC 7552 v4 Forty Eight-Core 64-bit processor - 2.2 GHz (192MB L3 cache, 200 W TDP)	P21963-001
AMD EPYC™ 7352 v4 Twenty Four-Core 64-bit processor - 2.30 GHz (123MB L3 cache, 155 W TDP)	P21227-001
AMD EPYC 7452 32 core processor - 2.35 GHz (Socket count: 2P, 64 threads, 128MB L3 cache, 155 W TDP)	P17338-001
CPU, AMD EPYC 7532/2.4G,32C,200 W	P25585-001
AMD EPYC 7502 32 core processor - 2.5 GHz (Socket count: 2P, 64 threads, 128MB L3 cache, 180 W TDP)	P17334-001
AMD EPYC 7282 v4 Sixteen-Core 64-bit processor - 2.80 GHz (64MB L3 cache, 120 W TDP)	P23685-001
AMD EPYC 7402 24 core processor - 2.8 GHz (Socket count: 2P, 48 threads, 128MB L3 cache, 180 W TDP)	P17336-001
AMD EPYC 7272 v4 Eight-Core 64-bit processor - 2.9 GHz (64MB L3 cache, 120 W TDP)	P23686-001
AMD EPYC 7302 16 core processor - 3.0 GHz (Socket count: 2P, 32 threads, 128MB L3 cache, 155 W TDP)	P17339-001
AMD EPYC™ 7252 v4 Eight-Core 64-bit processor - 3.10 GHz (64MB L3 cache, 120 W TDP, -2)	P23793-001
AMD EPYC 7262 8 core processor - 3.2 GHz (Socket count: 2P, 16 threads, 128MB L3 cache, 155 W TDP)	P17341-001

Heatsink

Description	Spare Part Number
Heatsink standard 1U	P00248-001
Standard heatsink 2U	P00249-001
Performance heatsink 2U	P00250-001

Power supply

Description	Spare Part Number
800 W flexible slot universal Hot-Plug low halogen power supply - 277 V ac/380 V dc power input, power discovery services (Blue plug) - 96% efficiency- Mixing of power supplies in the same server is not supported, must be the same spare part number	866727-001
800 W flexible slot -48 V dc Hot-Plug, halogen power supply - 200 - 277 V ac, 380 V dc power input, power discovery services (Blue plug) p- 96% efficiency- Mixing of power supplies in the same server is not supported, must be the same spare part number	866728-001
500 W flexible slot **platinum plus** Hot-Plug low halogen power supply - 750 W, 96% efficiency- Mixing of power supplies in the same server is not supported, must be the same spare part number	866729-001
800 W AC flexible slot **platinum plus** Hot-Plug low halogen power supply - Supports power discovery services (Blue plug) - 96% efficiency- Mixing of power supplies in the same server is not supported, must be the same spare part number	866730-001
800 W flexible slot titanium Hot-Plug low halogen power supply - Input voltage 200 - 277 V ac, 380 V dc, power output 1400 W - 96% efficiency- Mixing of power supplies in the same server is not supported, must be the same spare part number	866793-001
1600 W flexible slot **platinum plus** Hot-Plug low halogen power supply - Supports power discovery services (Blue plug) - 96% efficiency- Mixing of power supplies in the same server is not supported, must be the same spare part number	863373-001

Smart Array controller

Description	Spare Part Number
Smart Array E208i-a controller - Adaptive RAID on chip (AROC), 8-SAS lanes across 2 x4 internal Mini -SAS ports, No Flash-Backed Write Cache (FBWC), 1 2 Gb/s SAS, 6 Gb/s SATA,RAID 0, 1, 5, 10	836259-001
Smart Array P408i-a Short Range (SR) modular cont roller - 8-SAS lanes across 2 x4 internal Mini-SAS po rts, 2GB FBWC, 12 Gb/s SAS, 6 Gb/s SATA, RAID 0, 1, 5, 6, 10, 50, 60, 1 Advanced Data Mirroring (ADM), 1 0 ADM	836260-001
Smart Array P816i-a SR Gen10 - AROC, SAS/SATA i nterface, 16-SAS lanes across 4 x4 internal Mini-SAS ports, 4GB FBWC, 12 Gb/s SAS, 6 Gb/s SATA	836261-001
Smart Array E208i-p SR controller - SAS/SATA inter face, 8-SAS lanes across 2 x4 internal Mini-SAS ports , No FBWC, 12 Gb/s SAS, 6 Gb/s SATA, PCI express 3. 0 x8 link, RAID 0, 1, 5, 10	836266-001
Smart Array E208e-p SR controller - SAS/SATA inter face, 8-SAS lanes across (No FBWC) 2 x4 external M ini-SAS ports, 12 Gb/s SAS, 6 Gb/s SATA, PCI express 3.0 x8 link, RAID 0, 1, 5, 10	836267-001
Smart Array P408i-a SR modular controller - 12 Gb/s SAS, 6 Gb/s SATA and PCIe 3.0 x 8, 8-SAS 2 x 4 inter nal Mini-SAS lanes, 2GB FBWC, RAID 0, 1, 5, 6, 10, 5 0, 60, 1 ADM, 10 ADM	836269-001
Smart Array P408e-a SR modular controller - 12 G b/s SAS, 6 Gb/s SATA and PCIe 3.0 x 8, 8-SAS 2x4 in ternal Mini-SAS lanes, 4GB FBWC, RAID 0, 1, 5, 6, 10, 50, 60, 1 ADM, 10 ADM	836270-001
24 Port PCIe RAID controller with 3 pin cable	871043-001

Host Bus Adapter (HBA)

Description	Spare Part Number
StoreFabric SN1600Q 32Gb - Single-Port Fibre Channel (FC) adapter - 32 Gb/s interface, PCI Express 3.0 to FC	868140-001
StoreFabric SN1600Q 32Gb - Dual-Port FC adapter - 32 Gb/s interface, PCI express 3.0 to FC	868141-001
StoreFabric SN1600E 32Gb Single-Port FC HBA - 32 Gb/s interface, PCI express 3.0 to FC	869999-001
StoreFabric SN1600E 32Gb Dual-Port FC HBA	870000-001
SN1200E 16Gb Single-Port FC HBA - 16 Gb/s interface	870001-001
SN1200E 16Gb Dual-Port FC HBA - 16 Gb/s interface	870002-001
HPE SN1100Q 16Gb 1p FC HBA	853010-001
StoreFabric SN1100Q 16Gb Dual-Port FC HBA - 16 Gb/s interface, PCI express 3.0 to FC	853011-001

Converged Network Adapter (CNA)

Description	Spare Part Number
StoreFabric CN1100R - Dual-Port CNA, Ethernet, iSCSI, and FC over 10 GbE using both Fibre Channel over Ethernet (FCoE) and Converged Enhanced Ethernet (CEE)	706801-001
HPE StoreFabric CN1100R-T 10Gb CNA	872605-001
CN1200E 10Gb CNA - Dual-Port CNA, Ethernet, iSCSI and FC over 10 GbE using both FCoE and CEE	767078-001
StoreFabric CN1200E-T 10Gb CNA - Dual-Port CNA, Ethernet, iSCSI and FC over 10 GbE using both FCoE and CEE	827607-001

PCI riser board

Description	Spare Part Number
2x8 x16 PCIe riser	875058-001
PCI riser board x16 x16 PCIe S1/2	875059-001
PCI riser board x16 x16 PCIe S2/3	875060-001
x16 PCIe tertiary riser	875061-001
PCI riser board 2 slim SAS tertiary riser	875062-001
PCI riser board 1-S x16 1U riser	875085-001
PCI riser 3 x8/x1 slim SAS board	875086-001
PCI riser quad slim SAS board	875087-001

Network adapter

Description	Spare Part Number
Ethernet 1Gb 4-port 331T adapter - Has four 10/100/1000BASE-T RJ45 ports and 4Mb integrated buffer memory - Requires one x4 (Gen2) PCI express slot (Compatible with x8 and x16 PCI express slots) - Requires CAT5 or better Twisted-Pair	649871-001
Ethernet 1Gb 2-port 332T adapter - Has two 10/100/1000BASE-T RJ45 ports - Requires one x1 (Gen2) PCI Express slot (Compatible with x1, x4, x8 and x16 PCI express slots) - Requires CAT5 or better Twisted-Pair	616012-001
Ethernet 1Gb 2-port 361T adapter - Has two 10/100/1000BASE-T RJ-45 ports and 256MB integrated buffer memory - Requires one x4 PCI express slot (Compatible with x8 and x16 PCI express slots) - Requires CAT5E or better Twisted-Pair	656241-001
Ethernet 1Gb 4-port 366T adapter - Has four 10/100/1000BASE-T RJ45 ports - Requires one x4 (Gen2) PCI express slot (Compatible with x4, x8 and x16 PCI express slots) - Requires CAT5 or better Twisted-Pair	816551-001

Description	Spare Part Number
Ethernet 10Gb 2-port 521T adapter	869573-001
Ethernet 10Gb 2-port 535FlexibleLOM Rack (FLR)-T adapter - 2 - 10Gb ports, 40 Gb/s of Bi-Directional Ethernet bandwidth, Flexible LOM and stand up	815669-001
Ethernet 10Gb 2-port 562 Small Form Factor Pluggable Plus (SFP+) adapter - Has two 10 Gbe SFP+ ports and 256MB integrated memory - Provides up to 40 Gb/s Bi-Directional per adapter - Requires one x8 PCI (Gen 3) express slot (Backward compatible with x4 PCI express)	790316-001
Ethernet 10/25Gb 2-port 631SFP28 adapter - Dual 10/25Gb ports provide up to 100 Gb/s of Bi-Directional, FlexibleLOM (631FLR-SFP28) or stand up	840130-001
Ethernet 10/25Gb 2-port 640SFP28 adapter, PCIe card Form-Factor - Has two dual 10/25 Gbe SFP28 ports capable of 50 Gb/s Bi-Directional, 100 Gb/s aggregate Bi-Directional theoretical bandwidth - Requires one x8 PCI (Gen 8) express slot	840140-001

FlexibleLOM adapter

Description	Spare Part Number
Ethernet 1Gb 4-port 331FLR adapter, FlexibleLOM Form-Factor - Has four 10/100/1000BASE-T RJ45 ports and 276MB integrated memory - Requires one x4 PCI (Gen 2) FlexibleLOM slot (Mechanically compatible with x8 and x16 PCI FlexibleLOM slots)	789897-001
Ethernet 1Gb 4-port 366FLR adapter, FlexibleLOM Form-Factor - Has four 10/100/1000BASE-T RJ45 ports - Requires one x4 PCI (Gen 2) FlexibleLOM slot (Mechanically compatible with x8 and x16 PCI FlexibleLOM slots) - Requires CAT-5e or better twisted pair	669280-001
Ethernet 10Gb 2-port 535FLR-T FlexibleLOM adapter	854177-001
536FLR FlexFabric 10Gb 4-port adapter	768082-001
Ethernet 10Gb 2-port 562FLR-SFP+ adapter, FlexibleLOM form-factor - Has two 10 Gbe SFP+ ports -	790317-001

Description	Spare Part Number
Provides up to 40 Gb/s Bi-Directional per adapter - Requires one x8 PCIe (Gen 3) FlexibleLOM slot	
FLR 2-port 25 GBE Small Form Factor Pluggable28 (SFP28)	840133-001
Ethernet 10/25Gb 2-port 640FLR-SFP28 adapter, Fl exibleLOM Form-Factor - Has two dual 10/25 Gbe S FP28 ports capable of 50 Gb/s Bi-Directional, 100 G b/s aggregate Bi-Directional theoretical bandwidth - Requires one x8 PCI (Gen 3) express slot	840139-001

System board

Description	Spare Part Number
System I/O board (Motherboard) - Supports AMD E PYC 7xx1 processors - For this system board to sup port both the AMD 7xx1 and 7xx2 processors, the system ROM A40 version 2.0 or later is required	P00648-001
System board - Supports AMD EPYC 7xx2 processo rs - (Embedded 4x 1GbE Adapter is not equipped on new boards for 7xx2 series processors)	P17136-001

LFF front I/O board spare part

Description	Spare Part Number
I/O UID LFF module	875088-001

System battery

Description	Spare Part Number
Battery for Real-Time Clock (RTC) - 3.0 V, 220 mAh, lithium coin cell, 20 mm diameter, 3.2 mm height (CR 2032)	319603-001

Server options

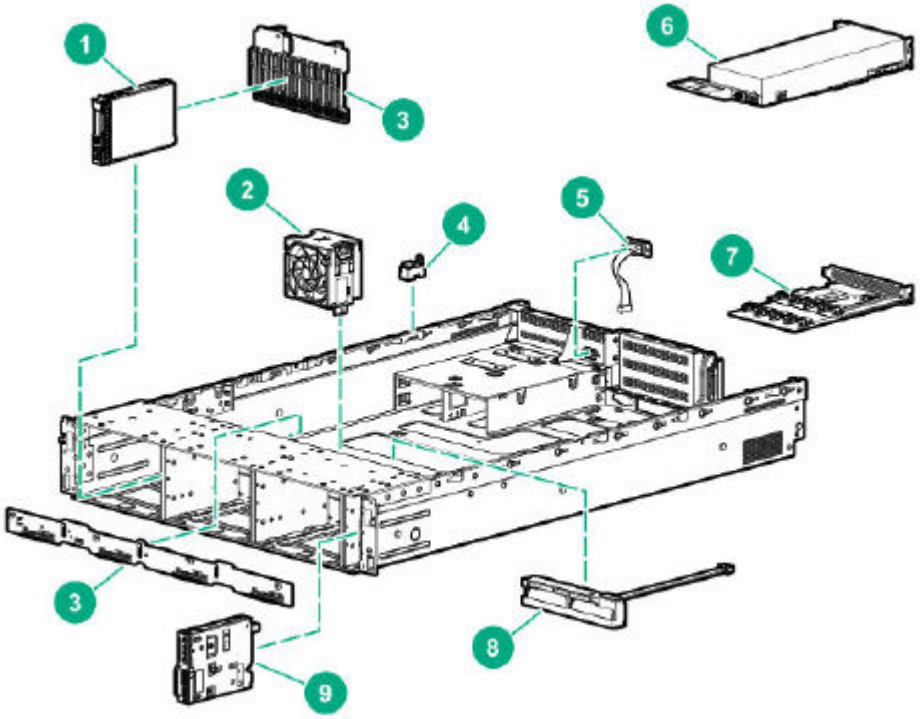

Item	Description
1	Drive.
2	Fan.
3	Backplane board.
4	Chassis intrusion detection switch.
5	Rear serial port interface.
6	Accelerator.
7	**HPE DL38x Gen10 12Gb SAS Expander Card spare part**.
8	**Energy pack spare parts**.
9	**Power module spare parts**.
10	**HPE Trusted Platform Module (TPM)2.0** [1]

Item	Description
11	Cable [1]
12	Thermal grease [1]

NOTE:

1. Not shown in image

Drive

Hot-Plug drive

Description	Spare Part Number
1TB SAS drive - 12 Gb/s transfer rate, 7,500 rpm, 2.5 in SFF, Midline (MDL), SmartDrive Carrier (SC) - For use with Gen8/Gen9 or newer	832984-001
1TB Hot-Plug SAS Hard Disk Drive (HDD) - 7,200 rpm, 12 Gb/s transfer rate, 2.5 in SFF, MDL, 512e sector format, SC	765872-001
1TB SATA HDD - 7,200 rpm, 6 Gb/s transfer rate, 3.5 in LFF, MDL, SC	862128-001
1TB SAS hard drive - 12 Gb/s interface, 7,200 rpm, 3.5 in LFF, SC	846612-001
1TB Hot-Plug SATA HDD - 7,200 rpm, 6 Gb/s transfer rate, 2.5 in SFF, MDL, 512e sector format, SC	765868-001
1TB Hot-Plug SATA HDD - 7,200 rpm, 6 Gb/s transfer rate, 2.5 in SFF, MDL, SC - Not for use in MSA products	656108-001
2TB Hot-Plug SAS HDD - 12 Gb/s transfer rate, 7,200 rpm, 2.5 in SFF, MDL, 512e format, SC - For use with Gen8/Gen9 or newer	765873-001
2TB HDD - SAS interface, 12 Gb/s interface, 3.5 in LFF, 7,200 rpm, SC, Dual-Port, Digitally Signed (DS) firmware	872744-001

Description	Spare Part Number
2TB Hot-Plug SATA HDD - 6 Gb/s transfer rate, 7,200 rpm, 2.5 in SFF, MDL, 512e sector format, SC	765869-001
2.4TB SAS Hot-Plug hard drive - 10,000 rpm, 2.5 in SFF, 12 Gb/s interface, SC, 512e format, SC, DS firmware	881507-001
3TB SAS hard drive - 6 Gb/s interface, 7,200 rpm, 3.5 in LFF, SC	862129-001
3TB SAS hard drive - 12 Gb/s interface, 7,200 rpm, 3.5 in LFF, SC - For use with Gen8/Gen9 or newer	846614-001
4TB SAS hard drive - 12 Gb/s transfer rate interface, 7,200 rpm, 3.5 in LFF, MDL, 512e format, DS firmware, SC	862141-001
4TB HDD - SAS interface, 12 Gb/s interface, 3.5 in LFF, 7,200 rpm, SC, Dual-Port, DS firmware	872745-001
4TB HDD - SATA interface, 6 Gb/s interface, 3.5 in LFF, 7,200 rpm, SC, DS firmware	872772-001
4TB SATA hard drive - 6 Gb/s transfer rate interface, 7,200 rpm, 3.5 in LFF, MDL, 512e format, DS firmware, SC	862139-001
6GB SATA MDL hard drive - 6 Gb/s SATA interface, 7,200 rpm, 3.5 in LFF, SC	846608-001
6TB SATA hard drive - 6 Gb/s transfer rate interface, 7,200 rpm, 3.5 in LFF, MDL, 512e format, DS firmware, SC	862138-001
6TB SAS hard drive - 12 Gb/s transfer rate interface, 7,200 rpm, 3.5 in LFF, MDL, 512e format, DS firmware,SC	862140-001
8TB SATA hard drive - 6 Gb/s interface, 7,200 rpm, 3.5 in LFF, low profile , SC, 512e format, DS firmware	861609-001
8TB SATA hard drive - 6 Gb/s interface, 7,200 rpm, 3.5 in LFF, SC, MDL, 512e format	820033-001
10TB SATA hard drive - 6 Gb/s interface, 7,200 rpm, 3.5 in LFF, 512e format	857967-001

Description	Spare Part Number
HPE 12TB SATA 6G MDL 7.2K LFF (3.5 in) SC 1-year warranty helium 512E DS firmware HDD	881785-B21
HPE 12TB SAS 12G MDL 7.2K LFF (3.5 in) SC 1-year warranty helium 512E DS firmware HDD	881779-B21
8TB SAS hard drive - 12 Gb/s interface, 7,200 rpm, 3.5 in LFF, SC - For use with Gen8/Gen9 or newer	861607-001
8TB SAS HDD - 12 Gb/s transfer rate, 7,200 rpm, 3.5 in LFF, SC, 512e format, MDL - For use with Gen8/Gen9 or newer	820032-001
10TB SATA hard drive - 12 Gb/s interface, 7,200 rpm, 3.5 in LFF, SC - For use with Gen8/Gen9 or newer	857965-001
300GB SAS hard drive - 12 Gb/s interface, 10,000 rpm, 2.5 in SFF, SC, DS firmware	872735-001
600GB SAS hard drive - 12 Gb/s interface, 10,000 rpm, 2.5 in SFF, SC, DS firmware	872736-001
1.2TB SAS hard drive - 12 Gb/s interface, 10,000 rpm, 2.5 in SFF, SC, DS firmware	872737-001
1.8TB SAS hard drive - 12 Gb/s interface, 10,000 rpm, 2.5 in SFF, enterprise drive, 512e format, DS firmware	872738-001
300GB SAS hard drive - 12 Gb/s interface, 15,000 rpm, 2.5 in SFF, enterprise drive, SC, DS firmware	870792-001
600GB SAS hard drive - 12 Gb/s interface, 15,000 rpm, 2.5 in SFF, enterprise drive, SC, DS firmware	870794-001
600GB SAS hard drive - 12 Gb/s interface, 15,000 rpm, 2.5 in SFF, enterprise drive, 512e format, DS firmware	870797-001
900GB SAS hard drive - 12 Gb/s interface, 15,000 rpm, 2.5 in SFF, enterprise drive, SC, DS firmware	870795-001
900GB SAS hard drive - 12 Gb/s interface, 15,000 rpm, 2.5 in SFF, Dual-Port, SC, DS firmware, 512e format	870798-001

Solid State Drive (SSD) Non-Volatile Memory Express (NVMe)

Description	Spare Part Number
400GB SSD - NVMe interface, PCIe data rate, NVMe x4 lanes, Mixed Use (MU), 2.5 in SFF, Smart Carrier NVMe (SCN), DS firmware	875874-001
480GB SSD - NVMe interface, PCIe data rate, NVMe x4 lanes Read Intensive (RI), 2.5 in SFF, SCN, DS firmware	875871-001
800GB SSD - NVMe interface, PCIe data rate, NVMe x4 lanes, MU, 2.5 in SFF, SCN, DS firmware	875875-001
960GB SSD - NVMe interface, PCIe data rate, NVMe x4 lanes RI, 2.5 in SFF, SCN, DS firmware	875872-001
1.6TB SSD - NVMe interface, PCIe data rate, NVMe x4 lanes, MU, 2.5 in SFF, SCN, DS firmware	875876-001
1.92TB SSD - NVMe interface, PCIe data rate, NVMe x4 lanes RI, 2.5 in SFF, SCN, DS firmware	875873-001

SSD uFF M.2

Description	Spare Part Number
150GB SSD - SATA interface,12 Gb/s interface, RI, M.2 form factor (2280), standard carrier, DS firmware	875835-001
150GB Hot-Plug SATA SSD - RI, M.2 -Micro Form Factor (uFF) to SFF smart carrier, DS firmware	882402-001
240GB SSD - SATA interface, M.2 type 2280 form factor, MU, DS firmware	875850-001
480GB SSD - SATA interface,6 Gb/s interface, RI, M.2 form factor (2280), standard carrier, DS firmware	875836-001
450GB Hot-Plug SATA SSD - 6 Gb/s interface, RI, M.2 -uFF to SFF smart carrier, DS firmware	882403-001
340GB SATA SSD M.2 dual drive module enablement kit - Includes PCIe3 x8 riser board for dual M.2 module and two SSD drives, RI-2 (RI), 6 Gb/s transfer rate - Supports DL/ML Gen9	835802-001

SSD SAS

Description	Spare Part Number
400GB SSD - SAS interface, 12 Gb/s interface, 2.5 in SFF, MU, SC, DS firmware	872505-001
480GB Hot-Plug SSD - SAS interface, MU, 12 Gb/s transfer rate, 2.5 in SFF, SC, DS firmware	873566-001
400GB Hot-Plug SAS SSD (SSD - 12 Gb/s data rate, 2.5 in SFF, Write Intensive (WI), DS firmware, SC	873563-001
480GB Hot-Plug SSD - SAS interface, RI, 12 Gb/s transfer rate, 2.5 in SFF, SC, DS firmware	875681-001
800GB SSD - SAS interface, 12 Gb/s interface, 2.5 in SFF, MU, SC, DS firmware	872506-001
800GB SSD - SAS interface, 12 Gb/s interface, 2.5 in SFF, MU, Smart Carrier Convertor (SCC) SFF to LFF, DS firmware	872507-001
800GB Hot-Plug SAS SSD - 12 Gb/s data rate, 2.5 in SFF, WI, DS firmware, SC	873564-001
800GB Hot-Plug SSD - SAS interface, MU, 12 Gb/s transfer rate, 2.5 in SFF, SC, DS firmware	873569-001
960GB Hot-Plug SSD - SAS interface, RI, 12 Gb/s transfer rate, 2.5 in SFF, SC, DS firmware	875682-001
960GB SSD - SAS interface, 12 Gb/s interface, 2.5 in SFF, RI, SC, DS firmware	872432-001
1.6TB Hot-Plug SSD - SAS interface, MU, 12 Gb/s transfer rate, 2.5 in SFF, SC, DS firmware	873570-001
1.6TB Hot-Plug SSD - SAS interface, 12 Gb/s transfer rate, WI, 2.5 in SFF, SC, DS firmware	873565-001
1.6TB SSD - SAS interface, 12 Gb/s interface, 2.5 in SFF, MU, SC, DS firmware	872509-001
1.92TB SSD - SAS interface, 12 Gb/s interface, 2.5 in SFF, RI, SC, DS firmware	872433-001
1.92TB Hot-Plug SSD - SAS interface, RI, 12 Gb/s transfer rate, 2.5 in SFF, SC, DS firmware	875684-001

Description	Spare Part Number
3.2TB Hot-Plug SSD - SAS interface, MU, 12 Gb/s transfer rate, 2.5 in SFF, SC, DS firmware	873571-001
3.2TB SSD - SAS interface, 12 Gb/s interface, 2.5 in SFF, MU, SCC, DS firmware	872511-001
3.84TB Hot-Plug SSD - SAS interface, RI, 12 Gb/s transfer rate, 2.5 in SFF, SC, DS firmware	875686-001
3.84TB SSD - SAS interface, 12 Gb/s interface, 2.5 in SFF, RI, SC, DS firmware	872434-001
7.68TB Hot-Plug SSD - SAS interface, RI, 12 Gb/s transfer rate, 2.5 in SFF, SC, DS firmware	870460-001
Drive SSD 15.3TB 12G SFF SAS RI SC	870462-001

SSD SATA

Description	Spare Part Number
240GB Hot-Plug SSD - SATA interface, MU, 6 Gb/s transfer rate, 2.5 in SFF, SC, DS firmware	875703-001
240GB SSD - SATA interface, 6 Gb/s transfer rate, 2.5 in SFF, MU , DS firmware, SC	882219-001
240GB SATA SSD - 6 Gb/s transfer rate, RI, 2.5 in SFF, SC, DS firmware	868924-001
240GB SSD - SATA interface,6 Gb/s transfer rate, 2.5 in SFF, RI , DS firmware, SC	878844-001
480GB Hot-Plug SSD - SATA interface, RI, 6 Gb/s transfer rate, 2.5 in SFF, SC, DS firmware	875655-001
480GB Hot-Plug SSD - SATA interface, MU, 6 Gb/s transfer rate, 2.5 in SFF, SCC, DS firmware	875864-001
480GB SSD - SATA interface, MU, 6 Gb/s transfer rate, 2.5 in SFF, SC, DS firmware	875863-001
480GB SSD - SATA interface, 6 Gb/s transfer rate, 2.5 in SFF, RI , DS firmware, SC	878846-001

Description	Spare Part Number
480GB SATA SSD - 6 Gb/s transfer rate, RI, 2.5 in SF F, SC, DS firmware	868926-001
480GB Hot-Plug SSD - SATA interface, MU-3, 6 Gb/s transfer rate, 2.5 in SFF, Power Loss Protection (PLP), SC, DS firmware	872518-001
480GB Hot-Plug SSD - SATA interface, MU, 6 Gb/s t ransfer rate, 3.5 in LFF, PLP, SCC, DS firmware	872519-001
480GB SSD - SATA interface, 6 Gb/s transfer rate, 2. 5 in SFF, MU, DS firmware, SC	879013-001
960GB Hot-Plug SSD - SATA interface, RI, 6 Gb/s tra nsfer rate, 2.5 in SFF, SC, DS firmware	875656-001
960GB SSD - SATA interface, MU, 6 Gb/s transfer rate, 2.5 in SFF, SC, DS firmware	875865-001
960GB Hot-Plug SSD - SATA interface, MU, 6 Gb/s t ransfer rate, 3.5 in LFF, SCC, DS firmware	875866-001
960GB SSD - SATA interface, 6 Gb/s transfer rate, 2. 5 in SFF, MU , DS firmware, SCC SFF to LFF (SCC)	879017-001
960GB SSD - SATA interface, 6 Gb/s transfer rate, 2. 5 in SFF, RI , DS firmware, SC	878849-001
960GB SATA SSD - SATA interface, RI, 2.5 in SFF, SC, DS firmware	868928-001
960GB Hot-Plug SSD - SATA interface, MU-3, 6 Gb/s transfer rate, 2.5 in SFF, SC, DS firmware	872520-001
960GB Hot-Plug SSD - SATA interface, MU-3, 6 Gb/s transfer rate, 3.5 in LFF, SCC, DS firmware	872521-001
960GB SSD - SATA interface, 6 Gb/s transfer rate, 2. 5 in SFF, MU , DS firmware, SC	879016-001
1.92TB Hot-Plug SSD - SATA interface, RI, 6 Gb/s tra nsfer rate, 2.5 in SFF, SC, DS firmware	875657-001
1.92TB Hot-Plug SSD - SATA interface, MU, 6 Gb/s t ransfer rate, 2.5 in SFF, SCC, DS firmware	875868-001

Description	Spare Part Number
1.92TB SSD - SATA interface, MU, 6 Gb/s transfer rate, 2.5 in SFF, SC, DS firmware	875867-001
1.92TB SSD - SATA interface, 6 Gb/s transfer rate, 2.5 in SFF, MU , DS firmware, SCC SFF to LFF (SCC)	879020-001
1.92TB SSD - SATA interface, 6 Gb/s transfer rate, 2.5 in SFF, MU , DS firmware, SC	879019-001
1.92TB SSD - SATA interface, 6 Gb/s transfer rate, 2.5 in SFF, RI , DS firmware, SC	878852-001
1.9TB SATA SSD - SATA interface, RI, 2.5 in SFF, SC, DS firmware	868930-001
1.92TB SSD - SATA interface, 6 Gb/s transfer rate, 2.5 in SFF, MU-3, SC, DS firmware	872522-001
3.84TB SSD - SATA interface, 6 Gb/s transfer rate, 2.5 in SFF, RI , DS firmware, SC	878855-001
3.84TB SATA SSD - SATA interface, RI, 2.5 in SFF, SC, DS firmware	868932-001

Optical drive

Description	Spare Part Number
SATA DVD-ROM optical drive (Jack black color) - 8X DVD-ROM read, 24X CD-ROM read, 9.5 mm (0.374 in) height	652296-001
SATA DVD-RW optical drive (Jack black color) - 8X DVD-ROM read, 24X CD-ROM read, 9.5 mm (0.374 in) height	652297-001
USB powered external +/- RW DVD RAM drive - Maximum 8x DVD +/-R read and write speed, maximum 24x CD read and write speed - USB 2.0 interface (USB 3.0 compatible) - Does not include external power adapter	775676-001

Fan

Description	Spare Part Number
Standard fan module	875075-001
High performance fan module	875076-001

Backplane board

Description	Spare Part Number
8-SFF SAS backplane 12 GB/s interface speed	878543-001
8-SFF premium hard drive backplane	874933-001
Backplane board - 2-SFF SAS rear backplane	875064-001
SAS/SATA backplane board - For the front 2-bay SFF hard drive cage - Up to 12 Gb/s transfer speed - Opt ional board for configurations requiring more than ei ght hard drives and no optical drive - Mounts on the rear of the drive cage	775401-001
2- SFF PCIe NVMe interface backplane	875080-001
3-LFF SAS rear backplane	875081-001
SAS backplane 4-LFF	875082-001
8- SFF, NVMe backplane	872971-001

Chassis intrusion detection switch

Description	Spare Part Number
Chassis intrusion detection switch	878412-001

Rear serial port interface

Description	Spare Part Number
Serial port cable 2x5p/9p	875571-001

Accelerator

Description	Spare Part Number
Computational accelerator	
NVIDIA Tesla P40 24GB module - 12 TFLOPS, GPU memory 24GB GDDR5, memory bandwidth 364 GB/s	872323-001
Performance and Coverage Analyser (PCA) HPE NVI DIA Tesla T4 16GB	P09571-001
NVIDIA Tesla V100 16GB module	876908-001
HPE NVIDIA Tesla V100 PCIe 32GB	P05913-001
Graphics Processing Unit (GPU) accelerator	
AMD Radeon Instinct MI25 graphics accelerator	876912-001
AMD Radeon Pro V340 graphics accelerator	872325-001
AMD Radeon Pro WX7100 GPU module	879036-001
NVIDIA Tesla M10 quad GPU	870046-001
Nvidia Quadro RTX6000 24GB module	P11377-001
Nvidia Quadro RTX8000 module	P11743-001
Workload accelerator	
750GB PCIe x4 WI, HH, DS card	P03580-001
1.6TB NVMe x8 MU HH DS card	P10670-001
3.2TB NVMe x8 MU HH DS card	P10671-001
6.4TB NVMe x8 MU HH DS card	P10672-001

HPE DL38x Gen10 12Gb SAS Expander Card spare part

Description	Spare Part Number
NVIDIA Tesla P100 PCIe 16GB computational accele rator	876907-001

Pensando DSP card

Description	Spare Part Number
DSP DSC-25 10/25G 2p SFP28 card	P27682-001
DSP HPE iLO management ALOM module	P27683-001

Energy pack spare parts

Description	Spare Part Number
Battery pack, 96 W megacell, 145 mm cable-b	878643-001
3CAP hybridcap module, w 145MM cable	P07473-001

Power module

Description	Spare Part Number
Power module without SID	875077-001
Power/System Insight Display (SID) module W/LBL	P00845-001
Power/optical drive module LFF	875079-001

HPE TPM 2.0

Description	Spare Part Number
TPM - Compatible with HPE Gen10 servers running Microsoft Windows Server 2012 R2 or newer, supports TPM 1.2 (UEFI and legacy mode) and 2.0 (UEFI mode)	872159-001

Cable

Description	Spare Part Number
Mini-SAS cable kit - For the front or rear 2-bay SFF hard drive cage - Includes a Mini-SAS to Mini-SAS cable and a Mini-SAS to SATA cable	784625-001
Mini-SAS cable assembly kit (Includes two mini-SAS cables) - For connecting the 8-bay SFF hard drive cage to the drive controller board	784621-001
Mini-SAS cable kit - Includes four Mini-SAS cables for use in interconnecting servers with the 12 and 15 LFF drives to the system I/O board or SAS controller board	784627-001
Mini SAS cable SFF kit	875089-001
Mini SAS LFF cable kit	875090-001
4P slim SAS NVMe primary riser cable, box 3 cable kit	875091-001
Slim SAS NVMe direct attach cables kit	875092-001
Mini-SAS 12G 2SFF Side-By-Side SATA	882066-001
Mini-SAS 12G rear 3LFF to SATA, M.2	882068-001
Mini-SAS 12G front/rear 2 premium SATA	P00698-001
8NVMe to slim SAS	869812-001
USB front 2.0-3.0 + DB9-MB kit	869817-001
Cable Mini-SAS 2SFF+4LFF 12G SATA kit	P00658-001
AROC to shiner 36p port1+2 kit	875093-001
Mini-SAS cable kit (Includes six cables) - For connecting between the 8-bay and 2-bay SFF hard drive cages and the H240 HBA or the P440ar controller board	784629-001
Mini-SAS shiner cable kit	875094-001
Data cable kit	875095-001

Description	Spare Part Number
SATA optical drive cable, 780 mm (30.7 in) long - Connects between the optical drive and the system I/O board	784623-001
Power cable kit	875096-001
GPU cables kit	875097-001
Cable USB front MB 2.0-3.0 + DB9MB kit	P00846-001

Thermal grease

Description	Spare Part Number
Thermal grease kit	777298-001

Option Parts

Subtopics

New model specific parts lists
Processor
Memory
Power supplies
HPE PCIe workload accelerator
HPE Computation and graphics accelerators
Additional factory integratable options
Additional options for factory integration from core
HPE Smart IO
HPE Optical drives
HPE Drives
HPE Networking
FlexibleLOM adapters
HPE InfiniBand
HPE I/O expansion options
Embedded management
HPE Converged infrastructure management software
HPE PCIe workload accelerator options
HPE Security
Controllers

Cable
HPE Disk based backup
Rail kits
HPE USB and SD options
HPE Support services
Product related documents

New model specific parts lists

IMPORTANT: To obtain current part number information for a specific product model, use the Standard Models page for this product family.

.

- The product Standard Models page now links the model SKU numbers to the spare parts list for each model found on the HPE PartSurfer web site. (To report missing or incorrect parts information in PartSurfer, please use the "Contact us" and "Missing or incorrect data" links within the PartSurfer web site utility.)
- To look up RoHS-compliant information in PartSurfer, use the component's option part number or the sales order number for a system in which the component is used (Available in the QuickSpecs or Standard Models page).

Processor

Description	Option Part Number
AMD EPYC 7xx2 Generation processor family	
HPE DL385 Gen10 AMD EPYC 7702 (2.0 GHz/64-core/200 W) Factory Installation Option (FIO) processor kit	P16636-L21
AMD EPYC 7552 (2.2 GHz/48-core/165-200 W) FIO processor kit	867805-B21
HPE DL385 Gen10 AMD EPYC 7502 (2.5 GHz/32-core/180-200 W) FIO processor kit	P16638-L21
HPE DL385 Gen10 AMD EPYC 7402 (2.8 GHz/24-core/180-200 W) FIO processor kit	P16640-L21
AMD EPYC 7352 (2.3 GHz/24-core/155 W) FIO processor kit	P21422-L21

Description	Option Part Number
HPE DL385 Gen10 AMD EPYC 7452 (2.3 GHz/32-core/155-180 W) FIO processor kit	P16642-L21
HPE DL385 Gen10 AMD EPYC 7302 (3.0 GHz/16-core/155-180 W) FIO processor kit	P16643-L21
HPE DL385 Gen10 AMD EPYC 7262 (3.2 GHz/8-core/155-180 W) FIO processor kit	P16645-L21
HPE DL385 Gen10 AMD EPYC 7702 (2.0 GHz/64-core/200 W) processor kit	P16636-B21
AMD EPYC 7552 (2.2GHz/48-core/165-200W) FIO Processor Kit	P21862-L21
AMD EPYC 7552 (2.2 GHz/48-core/165-200 W) processor kit	P21862-B21
AMD EPYC 7532 (2.4 GHz/32-core/200 W) FIO processor kit	P25769-L21
HPE DL385 Gen10 AMD EPYC 7502 (2.5 GHz/32-core/180-200 W) processor kit	P16638-B21
HPE DL385 Gen10 AMD EPYC 7402 (2.8 GHz/24-core/180-200 W) processor kit	P16640-B21
AMD EPYC 7352 (2.3 GHz/24-core/155 W) processor kit	P21422-B21
HPE DL385 Gen10 AMD EPYC 7452 (2.3 GHz/32-core/155-180 W) processor kit	P16642-B21
HPE DL385 Gen10 AMD EPYC 7302 (2.8 GHz/16-core/155-180 W) processor kit	P16643-B21
AMD EPYC 7282 (2.8 GHz/16-core/120 W) FIO processor kit	P19631-L21
AMD EPYC 7272 (2.9 GHz/12-core/120 W) FIO processor kit	P25852-L21
AMD EPYC 7252 (3.1 GHz/8-core/120 W) FIO processor kit	P25772-L21
HPE DL385 Gen10 AMD EPYC 7262 (3.2 GHz/8-core/155-180 W) processor kit	P16645-B21
AMD EPYC 7xx1 Generation processor family	
HPE DL385 Gen10 AMD EPYC 7371 (3.1 GHz/16-core/180 W) processor kit	P11520-B21
HPE DL385 Gen10 AMD EPYC 7261 (2.5 GHz/8-core/155-170 W) processor kit	P06047-B21

Description	Option Part Number
HPE DL385 Gen10 AMD EPYC 7601 (2.2 GHz/32-core/180 W) FIO processor kit	881162-L21
HPE DL385 Gen10 AMD EPYC 7551 (2.0 GHz/32-core/180 W) FIO processor kit	881163-L21
HPE DL385 Gen10 AMD EPYC - 7551 (2.0 GHz/32-core/180 W) processor kit	881163-B21
HPE DL385 Gen10 AMD EPYC - 7601 (2.2 GHz/32-core/180 W) processor kit	881162-B21
HPE DL385 Gen10 AMD EPYC 7501 (2.0 GHz/32-core/155 - 170 W) FIO processor kit	881164-L21
HPE DL385 Gen10 AMD EPYC - 7501 (2 GHz/32-core/155-170 W) processor kit	881164-B21
HPE DL385 Gen10 AMD EPYC - 7451 (2.3 GHz/24-core/180 W) processor kit	881165-B21
HPE DL385 Gen10 AMD EPYC 7451 (2.3 GHz/24-core/180 W) FIO processor kit	881165-L21
HPE DL385 Gen10 AMD EPYC - 7401 (2 GHz/24-core/155-170 W) processor kit	881166-B21
HPE DL385 Gen10 AMD EPYC 7401 (2.0 GHz/24-core/155 - 170 W) FIO processor kit	881166-L21
HPE DL385 Gen10 AMD EPYC 7351 (2.4 GHz/16-core/155 - 170 W) FIO processor kit	881169-L21
HPE DL385 Gen10 AMD EPYC - 7351 (2.4 GHz/16-core/155-170 W) processor kit	881169-B21
HPE DL385 Gen10 AMD EPYC 7301 (2.2 GHz/16-core/155 - 170 W) FIO processor kit	881170-L21
HPE DL385 Gen10 AMD EPYC - 7301 (2.2 GHz/16-core/155-170 W) processor kit	881170-B21
HPE DL385 Gen10 AMD EPYC 7251 (2.1 GHz/8-core/120 W) FIO processor kit	881171-L21
HPE DL385 Gen10 AMD EPYC 7281 (2.1 GHz/16-core/155 - 170 W) FIO processor kit	P00645-L21
HPE DL385 Gen10 AMD EPYC - 7281 (2.1 GHz/16-core/155 - 170 W) processor kit	P00645-B21

Description	Option Part Number

NOTE:

Ships with standard heatsink

Memory

Description	Option Part Number
Registered Dual in-line Memory Modules (RDIMMs)	
HPE 8GB (1 x 8GB) single rank x8 DDR4-2666 CAS-19-19-19 registered smart memory kit	838079-B21
HPE 16GB (1 x 16GB) single rank x4 DDR4-2666 CAS-19-19-19 registered smart memory kit	838081-B21
HPE 16GB (1 x 16GB) dual rank x8 DDR4-2666 CAS-19-19-19 registered smart memory kit	838089-B21
HPE 32GB (1 x 32GB) dual rank x4 DDR4-2666 CAS-19-19-19 registered smart memory kit	838083-B21
HPE 64GB (1 x 64GB) dual rank x4 DDR4-2666 CAS-19-19-19 registered smart memory kit	P05592-B21
HPE 8GB (1 x 8GB) single rank x8 DDR4-2933 CAS-21-21-21 registered smart memory kit	P19040-B21
HPE 16GB (1 x 16GB) dual rank x8 DDR4-2933 CAS-21-21-21 registered smart memory kit	P19042-B21
HPE 16GB (1 x 16GB) single rank x4 DDR4-2933 CAS-21-21-21 registered smart	P19041-B21
HPE 32GB (1 x 32GB) dual rank x4 DDR4-2933 CAS-21-21-21 registered smart	P19043-B21
HPE 64GB (1 x 64GB) dual rank x4 DDR4-2933 CAS-21-21-21 registered smart memory kit	P19045-B21
Load Reduced Dual in-line Memory Modules (LRDIMMs)	

Description	Option Part Number
HPE 64GB (1 x 64GB) quad rank x4 DDR4-2666 CAS-19-19-19 load reduced smart memory kit	838085-B21
HPE 128GB (1 x 128GB) octal rank x4 DDR4-2666 CAS-22-19-19 3DS load reduce d smart memory kit	838087-B21
HPE 64GB (1 x 64GB) quad rank x4 DDR4-2933 CAS-21-21-21 load reduced smart memory kit	P19044-B21
HPE 128GB (1 x 128GB) quad rank x4 DDR4-2933 CAS-21-21-21 load reduced sm art memory kit	P19047-B21
Memory blank kit	
HPE DDR4 Dual in-line Memory Module (DIMM) blank kit	P07818-B21

NOTE:

- Memory DIMM availability with a server platform is dependent upon completion of certif ication testing.
- The maximum memory speed is a function of the memory type, memory configuration and processor model.
- 128GB support is available 1H2018

Power supplies

Description	Option Part Number
HPE 500 W flexible slot platinum Hot-Plug low halogen power supply kit	865408-B21
HPE 800 W flexible slot titanium Hot-Plug low halogen power supply kit	865438-B21
HPE 800 W flexible slot universal Hot-Plug low halogen power supply kit	865428-B21
HPE 800 W flexible slot platinum Hot-Plug low halogen power supply kit	865414-B21
HPE 800 W flexible slot -48 V dc Hot-Plug low halogen power supply kit	865434-B21
HPE 1600 W flexible slot platinum Hot-Plug low halogen power supply kit	830272-B21

Description	Option Part Number

- Mixing of 2 different power supplies is not allowed
- Select one or more power supplies. For 800 W, 4 power supplies need to be selected.
- 1600 W power supplies only support high line voltage (200 - 240 V ac).
- Prior to making a power supply selection it is highly recommended that the HPE Power advisor is run to determine the right size power supply for the server configuration. For more information on HPE Po wer advisor, please check the below link:
  Click here to access the Rack and Power Infrastructure.
- All power supplies in a server should match. Mixing power supplies is not supported.
- HPE ProLiant servers ship with an IEC-IEC power cord used for rack mounting with Power Distribution Units (PDUs).

HPE PCIe workload accelerator

Description	Option Part Number
HPE 750GB PCIe x4 lanes Write Intensive (WI) Half Height Half Length (HHHL) 3-year warranty DS firmware card	878038-B21
HPE 1.6TB Non-Volatile Memory express (NVMe) Gen4 x8 high performance Mi xed Use (MU) AIC HHHL PM1735 Solid State Drive (SSD)	P26934-B21
HPE 1.6TB NVMe x8 lanes MU HHHL 3-year warranty DS firmware card	P10264-B21
HPE 3.2TB NVMe Gen4 x8 high performance MU AIC HHHL PM1735 SSD	P26936-B21
HPE 3.2TB NVMe x8 lanes MU HHHL 3-year warranty DS firmware card	P10266-B21
HPE 6.4TB NVMe Gen4 x8 high performance MU AIC HHHL PM1735 SSD	P26938-B21
HPE 6.4TB NVMe x8 lanes MU HHHL 3-year warranty DS firmware card	P10268-B21

HPE Computation and graphics accelerators

Description	Option Part Number
NVIDIA Quadro RTX 6000 graphics accelerator for HPE	R0Z45C
HPE AMD Radeon Pro WX7100 graphics accelerator	Q1K37A
HPE AMD Radeon Instinct MI25 graphics accelerator	Q1K38A
HPE AMD Radeon Pro V340 graphics accelerator	Q0Y81A
HPE NVIDIA Quadro RTX 6000 graphics accelerator	R0Z45A
NVIDIA Quadro RTX 8000 graphics accelerator for HPE	R1F97C
NVIDIA P40 24GB computational accelerator for HPE	Q0V80C
NVIDIA M10 Quad Graphical Processing Unit (GPU) module for HPE	Q0J62C
NVIDIA T4 16GB computational accelerator for HPE	R0W29C
HPE NVIDIA Quadro RTX 8000 graphics accelerator	R1F97A
HPE NVIDIA Tesla V100 Full Height and Half-Length (FHHL) 16GB compu tational accelerator	Q8Z50A
HPE NVIDIA Tesla V100 PCIe 32GB computational accelerator	Q9U36A
HPE NVIDIA Tesla P40 24GB computational accelerator	Q0V80A
NVIDIA Tesla M10 quad GPU module	Q0J62A
HPE NVIDIA Tesla T4 16GB computational accelerator	R0W29A
HPE DL38x Gen10 8-pin cable kit	871828-B21
HPE DL38x Gen10 8-pin keyed cable kit	871829-B21
HPE DL38x GPU 6px6p Y-Power cable kit	874212-B21
HPE GPU 2x 8-pin cable kit	P03849-B21
HPE DL38x Gen10 8x 6-pin cable kit	871830-B21

Additional factory integratable options

Description	Option Part Number
HPE Unique options	
HPE DL38X Gen10 slot ½ x16/x16 FIO riser kit [1]	871674-B21
HPE DL38X Gen10 x16/x16 GPU slot 2/3 FIO riser kit [2]	871676-B21
HPE 4 NVMe box 1 internal storage specification FIO	878186-B21
HPE DL38X Gen10 x8/x8/x8 1-port 2 NVMe SlimSAS FIO riser kit [3]	871673-B21
HPE 2 NVMe internal storage specification FIO [4]	878189-B21
HPE 6+2 NVMe internal storage specification FIO [5]	878192-B21
HPE 8Small Form Factor (SFF) front remove specification performance FIO [6]	873763-B21
HPE Riser remove specification FIO [7]	873766-B21
HPE Legacy FIO mode setting [8]	758959-B22
HPE Memory fast fault tolerance FIO kit [9]	875293-B21
HPE DL38X Gen10 3x16 Prim GPU FIO kit [9]	P14373-B21
HPE DL38X Gen10 3x16 Sec GPU FIO kit [9]	P14374-B21

NOTE:

1. Slot 1 or 2 in primary location
   - Supports full height and full length cards
   - Bus width x16, x16, connector width x16, x16
2. Primary riser, connector in slot 2 and 3 for GPU support
   - Supports full height and full length cards
   - Bus width x16, x16, connector width x16, x16
   - GPU support is available 1H2018
3. Supports 3x 8 and 1-port for NVMe
   - Supports FHHL cards
   - Bus width x8, x8, x8 connector width x8, x8, x8

Description	Option Part Number

4. This is a factory integrated only option. This will connect 2 SFF cage installed in the fro nt of the chassis to NVMe.
5. This is a factory integrated only option. Indicates the cage will also have an NVMe conn ection.
6. This is a factory integrated only option. Will remove the primary 8 SFF cage in box 3 of the 8SFF and replace with a box blank.
7. This is a factory integrated only option. Will remove the primary shipping PCIe riser.
8. Unified Extensible firmware Interface (UEFI) is the default, this FIO part can be used for Configure-To-Order (CTO) to enable legacy mode.
9. Fast fault tolerance is a new feature in Gen10 server memory that enables the system to boot with full memory performance while monitoring for DRAM device failures.

Additional options for factory integration from core

Description	Option Part Number
HPE Unique options	
HPE DL38X NVMe 8 SSD express bay enablement kit [1]	826689-B21
HPE DL385 Gen10 universal media bay [2]	882097-B21
HPE DL38X Gen10 premium 6 SFF SAS/SATA + 2 NVMe or 8 SFF SAS/SATA bay kit [3]	826690-B21
HPE DL385 Gen10 high performance heatsink kit [4]	882098-B21
HPE DL385 Gen10 1U high performance heatsink kit [4]	P19368-B21
HPE DL38X Gen10 high performance temperature fan kit [5]	867810-B21
HPE DL38X Gen10 2SFF Hard Disk Drive (HDD) SAS/SATA riser kit [6]	826688-B21
HPE DL38X Gen10 2SFF premium HDD front NVMe/SAS/SATA kit [7]	826687-B21
HPE DL38X Gen10 8 Large Form Factor (LFF) front 2SFF SAS/SATA HDD kit [8]	867805-B21

Description	Option Part Number
HPE DL38X Gen10 8LFF front 2 NVMe HDD bay kit [9]	873781-B21
HPE DL38X Gen10 12Gb SAS expander card kit with cables [10]	870549-B21
HPE DL385 Gen10 System Insight Display (SID) kit [11]	882099-B21
HPE DL3XX Gen10 rear serial cable and enablement kit [11]	873770-B21

NOTE:

1. This option provides support for up to 8 NVMe drives and can only be populated in Box 1, Box 2 and Box 3 of the SFF chassis.
   - The HPE DL385 Gen10 high performance fan kit is required for NVMe support (867810-B21).
   - The HPE DL38X Gen10 4-port 8 NVMe SlimSAS riser (867807-B21) is required to support this.
   - There are limitations on GPU support with the NVMe bay installed.
2. The HPE DL385 Gen10 universal media bay provides front display port and 2 x USB 2.0; plus support for 2x SFF front drives or 2 NVMe front drives (826687-B21, riser required) and odd support (Not included); and can only be located in Box1 in either an 8 SFF or 8+8 SFF model.
   - This is a SFF model option only
3. This kit can be supported in Box 1, 2 or 3 and provides support for up to 8 SFF SAS/SATA or 6 SAS/SATA + 2 NVMe drives per box.
   - With NVMe drives a specific riser is required. When adding to box 1 the addition of the high performance fan kit (867810-B21) is required.
4. Required for GPU installations
5. This kit is also required to support GPUs configurations. This is required for NVMe configurations. This kit provides maximum cooling for the server and it equired when Box 1, 2 and 3 are populated.
6. 2 SFF in the rear is only supported with a 24 SFF model or 12 LFF model. In the rear this leaves 1 x 16 slot accessible. Rear drives require the addition of the high performance fan kit (867810-B21).
7. Supports 2SFF SAS/SATA/NVMe in universal media bay (882097-B21). NVMe drives require the addition of the high performance fan kit (867810-B21). NVMe drives require the addition of an NVMe capable riser. Drive cage can be used in the rear of the chassis, but will not support NVMe drives rear. Supports uFF drives.
8. Adds support for 2 SFF in front of 8 LFF chassis (868706-B21).
9. Supports 2 NVMe in the universal media bay (Included) on the 8 LFF model. For support of the 2 NVMe drives this will require the addition of the HPE DL38X Gen10 x8/x8/x

Description	Option Part Number

8 1-port 2 NVMe SlimSAS riser (867806-B21); or the HPE DL38X Gen10 2-port 4 NV Me SlimSAS riser (867808-B21). NVMe drives require the addition of the high perform ance fan kit (867810-B21).

10. SAS expander to enable 24 SFF field upgrade and SAS expander to enable 24 SFF field upgrade.
11. SID no longer ships as standard but is available as a factory integrated or field upgrade option.

HPE Smart IO

Description	Option Part Number
Pensando Distributed Services Card (DSC)	
Pensando Distributed Services Platform (DSP) DSC-25 10/25Gb 2-port SFP28 card	P26966-B21
Pensando DSP Silver Software Licenses	
Pensando DSP Silver 1-year subscription 24x7 support E-RTU	R6A06AAE
Pensando DSP Silver 3-year subscription 24x7 support E-RTU	R6A07AAE
Pensando DSP Silver 4-year subscription 24x7 support E-RTU	R6F68AAE
Pensando DSP Silver 5-year subscription 24x7 support E-RTU	R6A08AAE
Pensando DSP Platinum Software Licenses	
Pensando DSP Platinum 1-year renewal subscription 24x7 support E-RTU	R6A09AAE
Pensando DSP Platinum 3-year subscription 24x7 support E-RTU	R6A10AAE
Pensando DSP Platinum 4-year subscription 24x7 support E-RTU	R6F69AAE
Pensando DSP Platinum 5-year subscription 24x7 support E-RTU	R6A11AAE

Description	Option Part Number
Pensando iLO Management Module	
Pensando DSP for HPE iLO sideband management adaptive LOM module	P26969-B21

HPE Optical drives

Description	Option Part Number
HPE 9.5 mm SATA DVD-ROM JackBlack Gen9 optical drive[1]	726536-B21
HPE 9.5 mm SATA DVD-RW JackBlack Gen9 optical drive[2]	726537-B21
HPE Mobile USB non leaded system DVD RW drive	701498-B21

NOTE:

1. The universal media bay (882097-B21) is required for this option on a SFF model. No support in 12 LFF or 24 SFF models.

2. This is only supported on USB 3.0 ports

- The universal media bay (882097-B21) is required for this option on a SFF model. No support in 12 LFF or 24 SFF models.

HPE Drives

Description	Option Part Number
Enterprise - 12G SAS - SFF drives	
HPE 300GB SAS 12G enterprise 15K SFF (2.5 in) SmartDrive Carrier (SC) 3-year warranty Digitally Signed (DS) firmware HDD	870753-B21

Description	Option Part Number
HPE 300GB SAS 12G enterprise 10K SFF (2.5 in) SC 3-year warranty DS firmware HDD	872475-B21
HPE 600GB SAS 12G enterprise 15K SFF (2.5 in) SC 3-year warranty DS firmware HDD	870757-B21
HPE 600GB SAS 12G enterprise 10K SFF (2.5 in) SC 3-year warranty DS firmware HDD	872477-B21
HPE 900GB SAS 12G enterprise 15K SFF (2.5 in) SC 3-year warranty DS firmware HDD	870759-B21
HPE 1.2TB SAS 12G enterprise 10K SFF (2.5 in) SC 3-year warranty DS firmware HDD	872479-B21
HPE 1.8TB SAS 12G enterprise 10K SFF (2.5 in) SC 3-year warranty 512e DS firmware HDD	872481-B21
HPE 2.4TB SAS 12G enterprise 10K SFF (2.5 in) SC 3-year warranty 512e DS firmware HDD	881457-B21
Enterprise - 12G SAS - LFF drives	
HPE 300GB SAS 12G enterprise 15K LFF (3.5 in) SCC 3-year warranty DS firmware HDD	P04693-B21
HPE 600GB SAS 12G enterprise 15K LFF (3.5 in) SCC 3-year warranty DS firmware HDD	P04695-B21
Midline (MDL) - 12G SAS - SFF drives	
HPE 1TB SAS 12G MDL 7.2K SFF (2.5 in) SC 1-year warranty DS firmware HDD	832514-B21
HPE 2TB SAS 12G MDL 7.2K SFF (2.5 in) SC 1-year warranty 512e HDD	765466-B21
MDL - 12G SAS - LFF drives	
HPE 2TB SAS 12G MDL 7.2K LFF (3.5 in) SC 1-year warranty DS firmware HDD	872485-B21
HPE 4TB SAS 12G MDL 7.2K LFF (3.5 in) SC 1-year warranty DS firmware HDD	872487-B21
HPE 6TB SAS 12G MDL 7.2K LFF (3.5 in) SC 1-year warranty 512e HDD	861754-B21
HPE 8TB SAS 12G MDL 7.2K LFF (3.5 in) SC 1-year warranty 512e DS firmware HDD	819201-B21

Description	Option Part Number
HPE 10TB SAS 12G MDL 7.2K LFF (3.5 in) SC 1-year warranty helium 512e DS firmware HDD	857644-B21
HPE 12TB SAS 12G MDL 7.2K LFF (3.5 in) SC 1-year warranty helium 512e DS firmware HDD	881779-B21
HPE 16TB SAS 12G business critical 7.2K LFF (3.5 in) SC 1-year warranty 512e ISE HDD	P23863-B21
HPE 18TB SAS 12G business critical 7.2K LFF SC 1-year warranty 512e ISE HDD	P37664-B21
HPE 14TB SAS 12G MDL 7.2K LFF (3.5 in) SC 1-year warranty helium 512e DS firmware HDD	P09153-B21
MDL - 6G SATA - SFF drives	
HPE 1TB SATA 6G MDL 7.2K SFF (2.5 in) SC 1-year warranty DS firmware HDD	655710-B21
HPE 2TB SATA 6G MDL 7.2K SFF (2.5 in) SC 1-year warranty 512e DS firmware HDD	765455-B21
MDL - 6G SATA - LFF drives	
HPE 1TB SATA 6G MDL 7.2K LFF (3.5 in) SC 1-year warranty HDD	861691-B21
HPE 2TB SATA 6G MDL 7.2K LFF (3.5 in) SC 1-year warranty DS firmware HDD	872489-B21
HPE 4TB SATA 6G MDL 7.2K LFF (3.5 in) SC 1-year warranty DS firmware HDD	872491-B21
HPE 6TB SATA 6G MDL 7.2K LFF (3.5 in) SC 1-year warranty 512e HDD	861750-B21
HPE 8TB SATA 6G MDL 7.2K LFF (3.5 in) SC 1-year warranty 512e DS firmware HDD	819203-B21
HPE 10TB SATA 6G MDL 7.2K LFF (3.5 in) SC 1-year warranty helium 512e DS firmware HDD	857648-B21
HPE 12TB SATA 6G MDL 7.2K LFF (3.5 in) SC 1-year warranty helium 512e DS firmware HDD	881785-B21
HPE 14TB SATA 6G MDL 7.2K LFF (3.5 in) SC 1-year warranty helium 512e DS firmware HDD	P09163-B21
HPE 16TB SATA 6G business critical 7.2K LFF (3.5 in) SC 1-year warranty 512e ISE HDD	P23857-B21
HPE 18TB SATA 6G business critical 7.2K LFF SC 1-year warranty 512e ISE HDD	P37673-B21

Description	Option Part Number
Read Intensive (RI) - 12G SAS - SFF - SSD	
HPE 960GB SAS 12G RI SFF (2.5 in) SC 3-year warranty DS firmware SSD	P06584-B21
HPE 960GB SAS 12G RI SFF (2.5 in) SC 3-year warranty DS firmware SSD	P04517-B21
HPE 960GB SAS 24G RI SFF SC PM6 SSD	P26285-B21
HPE 960GB SAS 12G RI SFF SC PM1643a SSD	P19903-B21
HPE 1.92TB SAS 12G RI SFF (2.5 in) SC 3-year warranty DS firmware SSD	P06586-B21
HPE 1.92TB SAS 12G RI SFF (2.5 in) SC 3-year warranty DS firmware SSD	P04519-B21
HPE 1.92TB SAS 24G RI SFF SC PM6 SSD	P26302-B21
HPE 1.92TB SAS 12G RI SFF SC PM1643a SSD	P19905-B21
HPE 3.84TB SAS 12G RI SFF SC PM1643a SSD	P19907-B21
HPE 3.84TB SAS 12G RI SFF (2.5 in) SC 3-year warranty DS firmware SSD	P06588-B21
HPE 3.84TB SAS 12G RI SFF (2.5 in) SC 3-year warranty DS firmware SSD	P04521-B21
HPE 3.84TB SAS 24G RI SFF SC PM6 SSD	P26306-B21
HPE 7.68TB SAS 12G RI SFF (2.5 in) SC 3-year warranty DS firmware SSD	P06590-B21
HPE 7.68TB SAS 12G RI SFF (2.5 in) SC 3-year warranty DS firmware SSD	P04523-B21
HPE 7.68TB SAS 24G RI SFF SC PM6 SSD	P26310-B21
HPE 7.68TB SAS 12G RI SFF SC PM1643a SSD	P19909-B21
HPE 15.3TB SAS 24G RI SFF SC PM6 SSD	P26314-B21
HPE 15.36TB SAS 12G RI SFF SC PM1643a SSD	P19911-B21
HPE 15.3TB SAS 12G RI SFF (2.5 in) SC 3-year warranty DS firmware SSD	P06592-B21
SSD selection	
RI - 12G SAS - SFF - SSD	
HPE 480GB SAS 12G RI SFF (2.5 in) SC 3-year warranty DS firmware SSD	875311-B21
HPE 960GB SAS 12G RI SFF (2.5 in) SC 3-year warranty DS firmware SSD	872390-B21

Description	Option Part Number
HPE 960GB SAS 12G RI SFF (2.5 in) SC 3-year warranty DS firmware SSD	875313-B21
HPE 1.92TB SAS 12G RI SFF (2.5 in) SC 3-year warranty DS firmware SSD	872392-B21
HPE 1.92TB SAS 12G RI SFF (2.5 in) SC 3-year warranty DS firmware SSD	875326-B21
HPE 3.84TB SAS 12G RI SFF (2.5 in) SC 3-year warranty DS firmware SSD	872394-B21
HPE 3.84TB SAS 12G RI SFF (2.5 in) SC 3-year warranty DS firmware SSD	875330-B21
HPE 7.68TB SAS 12G RI SFF (2.5 in) SC 3-year warranty DS firmware SSD	870144-B21
HPE 15.3TB SAS 12G RI SFF (2.5 in) SC 3-year warranty DS firmware SSD	870148-B21
MU - 12G SAS - SFF - SSD	
HPE 400GB SAS 12G MU SFF (2.5 in) SC 3-year warranty DS firmware SSD	872374-B21
HPE 400GB SAS 12G MU SFF (2.5 in) SC 3-year warranty DS firmware SSD	873359-B21
HPE 400GB SAS 12G MU SFF (2.5 in) SC 3-year warranty DS firmware SSD	P04525-B21
HPE 400GB SAS 12G MU SFF (2.5 in) SC 3-year warranty DS firmware SSD	P09088-B21
HPE 800GB SAS 12G MU SFF (2.5 in) SC 3-year warranty DS firmware SSD	P04527-B21
HPE 800GB SAS 24G MU SFF SC PM6 SSD	P26290-B21
HPE 800GB SAS 12G MU SFF (2.5 in) SC 3-year warranty DS firmware SSD	P09090-B21
HPE 800GB SAS 12G MU SFF SC PM1645a SSD	P19913-B21
HPE 1.6TB SAS 12G MU SFF (2.5 in) SC 3-year warranty DS firmware SSD	P04533-B21
HPE 1.6TB SAS 24G MU SFF SC PM6 SSD	P26354-B21
HPE 1.6TB SAS 12G MU SFF (2.5 in) SC 3-year warranty DS firmware SSD	P09092-B21
HPE 3.2TB SAS 12G MU SFF (2.5 in) SC 3-year warranty DS firmware SSD	P04537-B21
HPE 3.2TB SAS 24G MU SFF SC PM6 SSD	P26358-B21
HPE 1.6TB SAS 12G MU SFF SC PM1645a SSD	P19915-B21
HPE 3.2TB SAS 12G MU SFF (2.5 in) SC 3-year warranty DS firmware SSD	P09094-B21
HPE 3.2TB SAS 12G MU SFF SC PM1645a SSD	P19917-B21

Description	Option Part Number
HPE 6.4TB SAS 12G MU SFF (2.5 in) SC 3-year warranty DS firmware SSD	P04539-B21
HPE 6.4TB SAS 24G MU SFF SC PM6 SSD	P26362-B21
HPE 6.4TB SAS 12G MU SFF (2.5 in) SC 3-year warranty DS firmware SSD	P09096-B21
HPE 6.4TB SAS 12G MU SFF SC PM1645a SSD	P19919-B21
HPE 800GB SAS 12G MU SFF (2.5 in) SC 3-year warranty DS firmware SSD	872376-B21
HPE 800GB SAS 12G MU SFF (2.5 in) SC 3-year warranty DS firmware SSD	873363-B21
HPE 1.6TB SAS 12G MU SFF (2.5 in) SC 3-year warranty DS firmware SSD	872382-B21
HPE 1.6TB SAS 12G MU SFF (2.5 in) SC 3-year warranty DS firmware SSD	873365-B21
HPE 3.2TB SAS 12G MU SFF (2.5 in) SC 3-year warranty DS firmware SSD	872386-B21
HPE 3.2TB SAS 12G MU SFF (2.5 in) SC 3-year warranty DS firmware SSD	873367-B21
WI - 12G SAS - SFF - SSD	
HPE 400GB SAS 12G WI SFF (2.5 in) SC 3-year warranty DS firmware SSD	873351-B21
HPE 400GB SAS 12G WI SFF (2.5 in) SC 3-year warranty DS firmware SSD	P04541-B21
HPE 400GB SAS 24G WI SFF SC PM6 SSD	P26295-B21
HPE 400GB SAS 12G WI SFF (2.5 in) SC 3-year warranty DS firmware SSD	P09098-B21
HPE 400GB SAS 12G WI SFF SC SS540 SSD	P21125-B21
HPE 800GB SAS 12G WI SFF (2.5 in) SC 3-year warranty DS firmware SSD	P04543-B21
HPE 800GB SAS 24G WI SFF SC PM6 SSD	P26372-B21
HPE 800GB SAS 12G WI SFF (2.5 in) SC 3-year warranty DS firmware SSD	P09100-B21
HPE 800GB SAS 12G WI SFF SC SS540 SSD	P21127-B21
HPE 1.6TB SAS 12G WI SFF (2.5 in) SC 3-year warranty DS firmware SSD	P09102-B21
HPE 1.6TB SAS 12G WI SFF (2.5 in) SC 3-year warranty DS firmware SSD	P04545-B21
HPE 1.6TB SAS 24G WI SFF SC PM6 SSD	P26376-B21
HPE 1.6TB SAS 12G WI SFF SC SS540 SSD	P21129-B21

Description	Option Part Number
HPE 3.2TB SAS 12G WI SFF (2.5 in) SC 3-year warranty DS firmware SSD	P04547-B21
HPE 800GB SAS 12G WI SFF (2.5 in) SC 3-year warranty DS firmware SSD	873355-B21
MU - 12G SAS - LFF - SSD	
HPE 800GB SAS 12G MU SFF SC SS540 SSD	P21131-B21
HPE 960GB SAS 12G MU SC 3-year warranty value SAS DS firmware SSD	P10448-B21
HPE 1.6TB SAS 12G MU SFF SC SS540 SSD	P21133-B21
HPE 1.92TB SAS 12G MU SFF (2.5 in) SC 3-year warranty value SAS DS firmware SSD	P10454-B21
HPE 3.2TB SAS 12G MU SFF SC SS540 SSD	P21135-B21
HPE 3.84TB SAS 12G MU SFF (2.5 in) SC 3-year warranty value SAS DS firmware SSD	P10460-B21
HPE 6.4TB SAS 12G MU SFF SC SS540 SSD	P21137-B21
HPE 800GB SAS 12G MU LFF (3.5 in) SCC 3-year warranty DS firmware SSD	P04529-B21
HPE 800GB SAS 12G MU LFF (3.5 in) LPC 3-year warranty DS firmware SSD	P04531-B21
MU - 12G value SAS - LFF - SSD	
HPE 960GB SAS 12G MU LFF (3.5 in) SCC 3-year warranty value SAS DS firmware SSD	P10450-B21
HPE 1.92TB SAS 12G MU LFF (3.5 in) SCC 3-year warranty value SAS DS firmware SSD	P10456-B21
MU - 6G SATA - SFF - SSD	
HPE 480GB SATA 6G MU SFF (2.5 in) SC 3-year warranty DS firmware SSD	P07922-B21
HPE 480GB SATA 6G MU SFF (2.5 in) SC 3-year warranty DS firmware SSD	P05976-B21
HPE 960GB SATA 6G MU SFF (2.5 in) SC 3-year warranty DS firmware SSD	P07926-B21
HPE 960GB SATA 6G MU SFF (2.5 in) SC 3-year warranty DS firmware SSD	P05980-B21
HPE 960GB SATA 6G MU SFF (2.5 in) SC 3-year warranty multi vendor SSD	P18434-B21
HPE 1.92TB SATA 6G MU SFF (2.5 in) SC 3-year warranty DS firmware SSD	P07930-B21

Description	Option Part Number
HPE 3.84TB SATA 6G MU SFF (2.5 in) SC 3-year warranty DS firmware SSD	P00896-B21
HPE 3.84TB SATA 6G MU SFF (2.5 in) SC 3-year warranty DS firmware SSD	P05994-B21
HPE 3.84TB SATA 6G MU SFF (2.5 in) SC 3-year warranty multi vendor SSD	P18438-B21
HPE 3.84TB SATA 6G MU SFF SC SM883 SSD	P21517-B21
HPE 480GB SATA 6G MU SFF SC 5300M SSD	P19947-B21
HPE 960GB SATA 6G MU SFF SC 5300M SSD	P19949-B21
HPE 1.92TB SATA 6G MU SFF SC 5300M SSD	P19951-B21
HPE 3.84TB SATA 6G MU SFF SC 5300M SSD	P19953-B21
MU - 6G SATA - SFF - SSD	
HPE 1.92TB SATA 6G MU SFF (2.5 in) SC 3-year warranty DS firmware SSD	P05986-B21
HPE 1.92TB SATA 6G MU SFF (2.5 in) SC 3-year warranty multi vendor SSD	P18436-B21
MU - 6G SATA - LFF - SSD	
HPE 480GB SATA 6G MU LFF SCC 5300M SSD	P19978-B21
HPE 480GB SATA 6G MU LFF (3.5 in) SCC 3-year warranty DS firmware SSD	P07924-B21
HPE 960GB SATA 6G MU LFF (3.5 in) SCC 3-year warranty DS firmware SSD	P07928-B21
HPE 1.92TB SATA 6G MU LFF (3.5 in) SCC 3-year warranty DS firmware SSD	P07932-B21
RI - 6G SATA - SFF - SSD	
HPE 240GB SATA 6G RI SFF (2.5 in) SC 3-year warranty DS firmware SSD	P04556-B21
HPE 240GB SATA 6G RI SFF (2.5 in) SC 3-year warranty DS firmware SSD	P05924-B21
HPE 240GB SATA 6G RI SFF (2.5 in) SC 3-year warranty multi vendor SSD	P18420-B21
HPE 480GB SATA 6G RI SFF (2.5 in) SC 3-year warranty DS firmware SSD	P06194-B21
HPE 480GB SATA 6G RI SFF (2.5 in) SC 3-year warranty DS firmware SSD	P05928-B21
HPE 480GB SATA 6G RI SFF (2.5 in) SC 3-year warranty multi vendor SSD	P18422-B21
HPE 480GB SATA 6G RI SFF (2.5 in) SC 3-year warranty DS firmware SSD	P04560-B21

Description	Option Part Number
HPE 480GB SATA 6G RI SFF (2.5 in) SC 3-year warranty DS firmware SSD	P04474-B21
HPE 960GB SATA 6G RI SFF (2.5 in) SC 3-year warranty DS firmware SSD	P04564-B21
HPE 960GB SATA 6G RI SFF (2.5 in) SC 3-year warranty DS firmware SSD	P06196-B21
HPE 240GB SATA 6G RI SFF SC 5300P SSD	P19935-B21
HPE 480GB SATA 6G RI SFF SC 5300P SSD	P19937-B21
HPE 960GB SATA 6G RI SFF SC 5300P SSD	P19939-B21
HPE 1.92TB SATA 6G RI SFF SC 5300P SSD	P19941-B21
HPE 3.84TB SATA 6G RI SFF SC 5300P SSD	P19943-B21
HPE 7.68TB SATA 6G RI SFF SC 5300P SSD	P19945-B21
HPE 960GB SATA 6G RI SFF (2.5 in) SC 3-year warranty DS firmware SSD	P04476-B21
HPE 960GB SATA 6G RI SFF (2.5 in) SC 3-year warranty DS firmware SSD	P05932-B21
HPE 960GB SATA 6G RI SFF (2.5 in) SC 3-year warranty multi vendor SSD	P18424-B21
HPE 1.92TB SATA 6G RI SFF (2.5 in) SC 3-year warranty DS firmware SSD	P04566-B21
HPE 1.92TB SATA 6G RI SFF (2.5 in) SC 3-year warranty DS firmware SSD	P05938-B21
HPE 1.92TB SATA 6G RI SFF (2.5 in) SC 3-year warranty multi vendor SSD	P18426-B21
HPE 1.92TB SATA 6G RI SFF (2.5 in) SC 3-year warranty DS firmware SSD	P06198-B21
HPE 1.92TB SATA 6G RI SFF (2.5 in) SC 3-year warranty DS firmware SSD	P04478-B21
HPE 3.84TB SATA 6G RI SFF (2.5 in) SC 3-year warranty DS firmware SSD	P04480-B21
HPE 3.84TB SATA 6G RI SFF (2.5 in) SC 3-year warranty DS firmware SSD	P05946-B21
HPE 3.84TB SATA 6G RI SFF (2.5 in) SC 3-year warranty multi vendor SSD	P18428-B21
HPE 3.84TB SATA 6G RI SFF (2.5 in) SC 3-year warranty DS firmware SSD	P04570-B21
HPE 3.84TB SATA 6G RI SFF (2.5 in) SC 3-year warranty DS firmware SSD	P06200-B21
HPE 7.68TB SATA 6G RI SFF (2.5 in) SC 3-year warranty DS firmware SSD	P04482-B21
HPE 7.68TB SATA 6G RI SFF (2.5 in) SC 3-year warranty multi vendor SSD	P18430-B21

Description	Option Part Number
RI - 12G value SAS - SFF - SSD	
HPE 960GB SAS 12G RI SFF (2.5 in) SC 3-year warranty value SAS DS firmware SSD	P10440-B21
HPE 1.92TB SAS 12G RI SFF (2.5 in) SC 3-year warranty value SAS DS firmware SSD	P10442-B21
HPE 3.84TB SAS 12G RI SFF (2.5 in) SC 3-year warranty value SAS DS firmware SSD	P10444-B21
HPE 7.68TB SAS 12G RI SFF (2.5 in) SC 3-year warranty value SAS DS firmware SSD	P10446-B21
HPE 960GB SAS 12G RI SFF SC SS540 SSD	P21139-B21
HPE 1.92TB SAS 12G RI SFF SC SS540 SSD	P21141-B21
HPE 3.84TB SAS 12G RI SFF SC SS540 SSD	P21143-B21
HPE 7.68TB SAS 12G RI SFF SC SS540 SSD	P21145-B21
HPE 15.3TB SAS 12G RI SFF SC SS540 SSD	P21147-B21
RI - 6G SATA - SFF - SSD	
HPE 240GB SATA 6G RI SFF (2.5 in) SC 3-year warranty DS firmware SSD	875503-B21
HPE 480GB SATA 6G RI LFF (3.5 in) SCC 3-year warranty DS firmware SSD	P09687-B21
HPE 960GB SATA 6G RI LFF (3.5 in) SCC 3-year warranty DS firmware SSD	P09689-B21
HPE 1.92TB SATA 6G RI LFF (3.5 in) SCC 3-year warranty DS firmware SSD	P09693-B21
MU - 6G SATA - SFF - SSD	
HPE 480GB SATA 6G MU SFF (2.5 in) SC 3-year warranty DS firmware SSD	P09712-B21
HPE 480GB SATA 6G MU SFF SC SE5031 SSD	P13658-B21
HPE 960GB SATA 6G MU SFF (2.5 in) SC 3-year warranty DS firmware SSD	P09716-B21
HPE 960GB SATA 6G MU SFF SC SE5031 SSD	P13660-B21
HPE 1.92TB SATA 6G MU SFF (2.5 in) SC 3-year warranty DS firmware SSD	P09722-B21
HPE 1.92TB SATA 6G MU SFF SC SE5031 SSD	P13662-B21

Description	Option Part Number
HPE 3.84TB SATA 6G MU SFF RW SE5031 SSD	P13664-B21
MU - 6G SATA - LFF - SSD	
HPE 960GB SATA 6G MU LFF (3.5 in) SCC 3-year warranty DS firmware SSD	P09718-B21
HPE 1.92TB SATA 6G MU LFF (3.5 in) SCC 3-year warranty DS firmware SSD	P09724-B21
VRO - 6G SATA - SFF - SSD	
HPE 1.92TB SATA 6G very read optimized SFF SC 5210 SSD	P23487-B21
HPE 3.84TB SATA 6G very read optimized SFF SC 5210 SSD	P23489-B21
HPE 7.68TB SATA 6G very read optimized SFF SC 5210 SSD	P23493-B21
RI - NVMe - SFF - SSD	
HPE 960GB NVMe x4 lanes RI SFF (2.5 in) SCN 3-year warranty DS firmware SSD	P10208-B21
HPE 960GB NVMe x4 lanes RI SFF (2.5 in) SCN 3-year warranty DS firmware SSD	P07190-B21
HPE 960GB NVMe Gen3 mainstream performance RI SFF SCN U.2 PE6011 SSD	P13676-B21
HPE 960GB NVMe Gen4 high performance RI SFF SCN U.3 CM6 SSD	P20015-B21
HPE 960GB NVMe Gen4 mainstream performance RI SFF SCN U.3 CD6 SSD	P25944-B21
HPE 960GB NVMe Gen4 mainstream performance RI SFF SC U.3 PE8010 SSD	P19807-B21
HPE 960GB NVMe Gen4 mainstream performance RI SFF SCN U.3 PE8010 SSD	P19809-B21
HPE 1.92TB NVMe x4 lanes RI SFF (2.5 in) SCN 3-year warranty DS firmware SSD	P10210-B21
HPE 1.92TB NVMe x4 lanes RI SFF (2.5 in) SCN 3-year warranty DS firmware SSD	P07192-B21
HPE 1.92TB NVMe Gen3 mainstream performance RI SFF SCN U.2 PE6011 SSD	P13678-B21
HPE 1.92TB NVMe Gen4 high performance RI SFF SCN U.3 CM6 SSD	P20017-B21
HPE 1.92TB NVMe Gen4 mainstream performance RI SFF SCN U.3 CD6 SSD	P20139-B21
HPE 1.92TB NVMe Gen4 mainstream performance RI SFF SC U.3 PE8010 SSD	P19811-B21
HPE 1.92TB NVMe Gen4 mainstream performance RI SFF SCN U.3 PE8010 SSD	P19813-B21
HPE 2TB NVMe x4 lanes RI SFF (2.5 in) SCN 3-year warranty DS firmware SSD	P13695-B21

Description	Option Part Number
HPE 3.84TB NVMe x4 lanes RI SFF (2.5 in) SCN 3-year warranty DS firmware SSD	P10212-B21
HPE 3.84TB NVMe Gen3 mainstream performance RI SFF SCN U.2 PE6011 SSD	P13680-B21
HPE 3.84TB NVMe Gen4 high performance RI SFF SCN U.3 CM6 SSD	P20019-B21
HPE 3.84TB NVMe Gen4 mainstream performance RI SFF SCN U.3 CD6 SSD	P20141-B21
HPE 3.84TB NVMe Gen4 mainstream performance RI SFF SC U.3 PE8010 SSD	P19815-B21
HPE 3.84TB NVMe Gen4 mainstream performance RI SFF SCN U.3 PE8010 SSD	P19817-B21
HPE 3.84TB NVMe x4 lanes RI SFF (2.5 in) SCN 3-year warranty DS firmware SSD	P07194-B21
HPE 4TB NVMe x4 lanes RI SFF (2.5 in) SCN 3-year warranty DS firmware SSD	P13697-B21
HPE 7.68TB NVMe x4 lanes RI SFF (2.5 in) SCN 3-year warranty DS firmware SSD	P07196-B21
HPE 7.68TB NVMe Gen3 mainstream performance RI SFF SCN U.2 PE6011 SSD	P13682-B21
HPE 7.68TB NVMe Gen4 high performance RI SFF SCN U.3 CM6 SSD	P20021-B21
HPE 7.68TB NVMe Gen4 mainstream performance RI SFF SCN U.3 CD6 SSD	P20143-B21
HPE 7.68TB NVMe Gen4 mainstream performance RI SFF SC U.3 PE8010 SSD	P19819-B21
HPE 7.68TB NVMe Gen4 mainstream performance RI SFF SCN U.3 PE8010 SSD	P19821-B21
HPE 15.36TB NVMe Gen4 mainstream performance RI SFF SCN U.3 CD6 SSD	P20145-B21
HPE 15.36TB NVMe x4 lanes RI SFF (2.5 in) SCN 3-year warranty DS firmware SSD	P07198-B21
HPE 1.92TB NVMe x4 lanes RI SFF (2.5 in) SCN 3-year warranty DS firmware SSD	P10214-B21
HPE 3.84TB NVMe x4 lanes RI SFF (2.5 in) SCN 3-year warranty DS firmware SSD	P10216-B21
HPE 7.68TB NVMe x4 lanes RI SFF (2.5 in) SCN 3-year warranty DS firmware SSD	P10218-B21
MU - NVMe - SFF - SSD	
HPE 800GB NVMe x4 lanes MU SFF (2.5 in) SCN 3-year warranty DS firmware SSD	P07179-B21
HPE 800GB NVMe Gen3 mainstream performance MU SFF SCN U.2 PE6031 SSD	P13668-B21
HPE 800GB NVMe Gen4 high performance MU SFF SCN U.3 CM6 SSD	P20094-B21

Description	Option Part Number
HPE 800GB NVMe Gen4 mainstream performance MU SFF SCN U.3 CD6 SSD	P25953-B21
HPE 800GB NVMe Gen4 mainstream performance MU SFF SC U.3 PE8030 SSD	P19823-B21
HPE 800GB NVMe Gen4 mainstream performance MU SFF SCN U.3 PE8030 SSD	P19825-B21
HPE 1.6TB NVMe x4 lanes MU SFF (2.5 in) SCN 3-year warranty DS firmware SSD	P07181-B21
HPE 1.6TB NVMe x4 lanes MU SFF (2.5 in) SCN 3-year warranty DS firmware SSD	P13699-B21
HPE 1.6TB NVMe Gen3 mainstream performance MU SFF SCN U.2 PE6031 SSD	P13670-B21
HPE 1.6TB NVMe Gen4 high performance MU SFF SCN U.3 CM6 SSD	P20096-B21
HPE 1.6TB NVMe Gen4 mainstream performance MU SFF SCN U.3 CD6 SSD	P20203-B21
HPE 1.6TB NVMe Gen4 mainstream performance MU SFF SC U.3 PE8030 SSD	P19827-B21
HPE 1.6TB NVMe Gen4 mainstream performance MU SFF SCN U.3 PE8030 SSD	P19829-B21
HPE 3.2TB NVMe Gen3 mainstream performance MU SFF SCN U.2 PE6031 SSD	P13672-B21
HPE 3.2TB NVMe Gen4 high performance MU SFF SCN U.3 CM6 SSD	P20098-B21
HPE 3.2TB NVMe Gen4 mainstream performance MU SFF SCN U.3 CD6 SSD	P20205-B21
HPE 3.2TB NVMe Gen4 mainstream performance MU SFF SCN U.3 PE8030 SSD	P19831-B21
HPE 3.2TB NVMe Gen4 mainstream performance MU SFF SC U.3 PE8030 SSD	P19833-B21
HPE 6.4TB NVMe Gen4 high performance MU SFF SCN U.3 CM6 SSD	P20100-B21
HPE 6.4TB NVMe Gen4 mainstream performance MU SFF SCN U.3 CD6 SSD	P20207-B21
HPE 6.4TB NVMe Gen4 mainstream performance MU SFF SC U.3 PE8030 SSD	P19835-B21
HPE 6.4TB NVMe Gen4 mainstream performance MU SFF SCN U.3 PE8030 SSD	P19837-B21
HPE 12.8TB NVMe Gen4 mainstream performance MU SFF SCN U.3 CD6 SSD	P20209-B21
HPE 6.4TB NVMe Gen3 mainstream performance MU SFF SCN U.2 PE6031 SSD	P13674-B21
HPE 1.6TB NVMe x4 lanes MU SFF (2.5 in) SCN 3-year warranty DS firmware SSD	P10222-B21
HPE 3.2TB NVMe x4 lanes MU SFF (2.5 in) SCN 3-year warranty DS firmware SSD	P10224-B21
HPE 6.4TB NVMe x4 lanes MU SFF (2.5 in) SCN 3-year warranty DS firmware SSD	P10226-B21

Description	Option Part Number
HPE 3.2TB NVMe x4 lanes MU SFF (2.5 in) SCN 3-year warranty DS firmware SSD	P07183-B21
HPE 3.2TB NVMe x4 lanes MU SFF (2.5 in) SCN 3-year warranty DS firmware SSD	P13701-B21
HPE 6.4TB NVMe x4 lanes MU SFF (2.5 in) SCN 3-year warranty DS firmware SSD	P07185-B21
HPE 6.4TB NVMe x4 lanes MU SFF (2.5 in) SCN 3-year warranty DS firmware SSD	P13703-B21
WI - NVMe - SFF - SSD	
HPE 375GB NVMe x4 lanes WI SFF (2.5 in) SCN 3-year warranty DS firmware SSD	878014-B21
HPE 750GB NVMe x4 lanes WI SFF (2.5 in) SCN 3-year warranty DS firmware SSD	P06952-B21
RI - M.2 - SSD	
HPE 240GB SATA 6G RI M.2 2280 5300B SSD	P19888-B21
HPE 480GB SATA 6G RI M.2 2280 5300P SSD	P19890-B21
HPE 960GB SATA 6G RI M.2 2280 5300P SSD	P19892-B21
HPE Dual 240GB SATA 6G RI M.2 to SFF SCM 5300B SSD kit	P19894-B21
HPE Dual 480GB SATA 6G RI M.2 to SFF SCM 5300P SSD kit	P19896-B21
HPE Dual 480GB SATA 6G RI M.2 - UFF to SFF SCM 3-year warranty DS firmware SSD	P06609-B21
HPE 480GB SATA 6G RI M.2 2280 3-year warranty DS firmware SSD	875498-B21
HPE 960GB SATA 6G RI M.2 2280 3-year warranty DS firmware SSD	875500-B21
MU - M.2 - SSD	
HPE Dual 240GB SATA 6G MU M.2 - UFF to SFF SCM 3-year warranty DS firmware SSD	P06607-B21
HPE 240GB SATA 6G MU M.2 2280 3-year warranty DS firmware SSD	875488-B21
HPE 480GB SATA 6G MU M.2 2280 3-year warranty DS firmware SSD	875490-B21
HPE 960GB SATA 6G MU M.2 2280 3-year warranty DS firmware SSD	875492-B21
MU - 6G SATA - SFF - SSD	
HPE 480GB SATA 6G MU SFF (2.5 in) SC 3-year warranty DS firmware SSD	872344-B21

Description	Option Part Number
HPE 480GB SATA 6G MU SFF (2.5 in) SC 3-year warranty multi vendor SSD	P18432-B21
HPE 960GB SATA 6G MU SFF (2.5 in) SC 3-year warranty DS firmware SSD	872348-B21
HPE 1.92TB SATA 6G MU SFF (2.5 in) SC 3-year warranty DS firmware SSD	872352-B21
MU - NVMe - SFF - SSD [1]	
HPE 400GB NVMe x4 lanes MU SFF (2.5 in) SCN 3-year warranty DS firmware SSD	875593-B21
HPE 800GB NVMe x4 lanes MU SFF (2.5 in) SCN 3-year warranty DS firmware SSD	875595-B21
HPE 1.6TB NVMe x4 lanes MU SFF (2.5 in) SCN 3-year warranty DS firmware SSD	875597-B21
RI - 6G SATA uFF - SSD	
HPE Dual 150GB SATA RI M.2 - UFF to SFF SCM 3-year warranty DS firmware SSD	880875-B21
HPE Dual 480GB SATA RI M.2 - UFF to SFF SCM 3-year warranty DS firmware SSD	880877-B21
Hard drive blank kits [2]	
HPE Universal SATA HHHL 3-year warranty M.2 kit	878783-B21
HPE LFF hard drive blank kit	666986-B21
HPE SFF hard drive blank kit	666987-B21
Hard drive kits [3]	
HPE DL38X Gen10 3LFF rear SAS/SATA drive kit	826685-B21
HPE DL385 Gen10 4 LFF Mid-Plane hard drive carrier [4]	882096-B21
HPE DL38X Gen10 SFF Box1/2 cage/backplane kit [5]	826691-B21

NOTE:

1. An NVME (826689-B21 or 873781-B21) or premium (826690-B21) drive cage is requ ired to support these drives in conjunction with a NVMe riser kit.

   - HPE has qualified the NVMe drive portfolio using the Operating System (OS) inbox drivers, For more information on HPE SSD, please check the below link:

     Click here to access the Quickspecs page for HPE SSD.

   - With NVMe support only 1x double wide graphics card is supported.

Description	Option Part Number

- Not supported by HPE Smart Array controllers
- NVMe drives require the addition of the high performance fan kit (867810-B21).

2. This is a M.2 enablement standup card
3. This is supported in the LFF model only and 3 LFF rear drives will consume the 2nd ris er expansion slot.
4. Supports 2SFF SAS/SATA/NVMe in universal media bay (882097-B21). NVMe drives require the addition of the high performance fan kit (867810-B21) and NVMe drives re quire the addition of an NVMe capable riser. Drive cage can be used in the rear of the c hassis, but will not support NVMe drives rear.
5. Supports 8 SAS/SAFA SFF drives in box 1 or 2 to a max of 24 SFF SAS/SATA front.

HPE Networking

Description	Option Part Number
1 GbE Adapters	
HPE Ethernet 1Gb 4-port 331T adapter	647594-B21
HPE Ethernet 1Gb 2-port 332T adapter	615732-B21
HPE Ethernet 1Gb 2-port 361T adapter	652497-B21
HPE Ethernet 1Gb 4-port 366T adapter	811546-B21
10 GbE Adapters	
HPE Ethernet 10Gb 2-port 521T adapter	867707-B21
HPE Ethernet 10Gb 2-port 524SFP+ adapter	P08446-B21
HPE Ethernet 10Gb 2-port 535T adapter	813661-B21
HPE Ethernet 10Gb 2-port 562SFP+ adapter	727055-B21
HPE Ethernet 10Gb 2-port 562T adapter	817738-B21
HPE Ethernet 10Gb 2-port 548SFP+ adapter	P11338-B21

Description	Option Part Number
HPE Ethernet 10Gb 2-port 562FLR-T adapter	817745-B21
25 GbE Adapters	
HPE Ethernet 10/25Gb 2-port 631SFP28 adapter	817718-B21
HPE Ethernet 10/25Gb 2-port 640SFP28 adapter	817753-B21
HPE Ethernet 10/25Gb 2-port 621SFP28 adapter	867328-B21
100 GbE Adapters	
HPE Ethernet 100Gb 1-port 842QSFP28 adapter	874253-B21
200 GbE Adapters	
HPE InfiniBand HDR/Ethernet 200Gb 1-port 940QSFP56 adapter	P06154-B21
HPE InfiniBand HDR PCIe3 auxiliary card with 350 mm cable kit	P06154-B23
HPE InfiniBand HDR100/Ethernet 100Gb 1-port 940QSFP56 adapter	P06250-B21
HPE InfiniBand HDR100/Ethernet 100Gb 2-port 940QSFP56 adapter	764285-B21

NOTE:

- The DL385 Gen10 ships with 4 x 1Gb embedded
- A minimum of 2GB of server memory is required per each adapter.
- Direct Attach Cable (DAC) for copper environments or fiber transceivers and cables for fiber-optic environments must be purchased separately. Please see the related NIC QuickSpecs for technical specifications and additional information given below:

  Click here to access the page for Server Adapters.

FlexibleLOM adapters

Description	Option Part Number
HPE Ethernet 1Gb 4-port 331FLR adapter	629135-B22
HPE Ethernet 1Gb 4-port 366FLR adapter	665240-B21
HPE Ethernet 10Gb 2-port 535FLR-T adapter	817721-B21
HPE FlexFabric 10Gb 4-port 536FLR-T adapter	764302-B21
HPE Ethernet 10Gb 2-port 562FLR-SFP+ adapter	727054-B21
HPE Ethernet 10/25Gb 2-port 631FLR-SFP28 adapter	817709-B21
HPE Ethernet 10/25Gb 2-port 640FLR-SFP28 adapter	817749-B21
HPE Ethernet 10/25Gb 2-port 622FLR-SFP28 converged network adapter	867334-B21

NOTE:

- The DL385 Gen10 chassis ships with 4 x 1Gb embedded
- Only one FlexibleLOM can be added to the server. These options are upgradeable and can be changed from the original configuration after the server is shipped.
- DAC for copper environments or fiber transceivers and cables for Fiber-Optic environments must be purchased separately.

HPE InfiniBand

Description	Option Part Number
HPE InfiniBand FDR/Ethernet 10Gb/40Gb 2-port 544+FLR-QSFP adapter	764285-B21
HPE InfiniBand FDR/Ethernet 40/50Gb 2-port 547FLR-QSFP adapter	879482-B21
HPE InfiniBand EDR/Ethernet 100Gb 1-port 840QSFP28 adapter	825110-B21

Description	Option Part Number
HPE InfiniBand EDR/Ethernet 100Gb 2-port 840QSFP28 adapter	825111-B21
HPE InfiniBand EDR 100Gb 1-port 841QSFP28 adapter	872725-B21
HPE InfiniBand EDR/Ethernet 100Gb 2-port 841QSFP28 adapter	872726-B21
HPE InfiniBand FDR/Ethernet 10Gb/40Gb 2-port 544+QSFP adapter	764284-B21
HPE 100Gb 1-port OP101 QSFP28 x8 PCIe Gen3 with Intel Omni-Path architecture adapter	829334-B21
HPE 100Gb 1-port OP101 QSFP28 x16 PCIe Gen3 with Intel Omni-Path architecture adapter	829335-B21
HPE InfiniBand HDR100/Ethernet 100Gb 2-port 940QSFP56 adapter	P06251-B21

HPE I/O expansion options

Description	Option Part Number
HPE DL38X Gen10 x16/x16 riser kit [1]	826694-B21
HPE DL Gen10 x8/x16/x8 riser kit [2]	870548-B21
HPE DL38X Gen10 4-port 8 NVMe primary SlimSAS FIO riser [3]	867807-B21
HPE DL Gen10 x16/x16 GPU riser kit [4]	826704-B21
HPE DL38X Gen10 x8/x8/x8 1-port 2 NVMe SlimSAS riser [5]	867806-B21
HPE DL38X Gen10 2-port 4 NVMe SlimSAS riser [6]	867808-B21
HPE DL38X Gen10 4-port 8 NVMe secondary Slim SAS riser [7]	873732-B21
HPE DL38X Gen10 2 x8 PCIe tertiary riser kit [8]	875780-B21
HPE DL38X Gen10 x16 tertiary riser kit [9]	826700-B21

Description	Option Part Number

NOTE:

1. Slot 1 or 2 in primary or secondary location. Supports FHHL cards and bus width x16, x 16, connector width x16, x16.
2. No M.2 support on this riser, supports FHHL cards. Bus width x8, x16, x8, connector wi dth x8, x16, x8.
3. Riser supporting up to 8 NVMe drives in primary location. This is a factory integrated o nly option. This can be connected to an 8SFF NVMe drive cage in box 3 and to achieve max 204 NVMe support, connect 4 NVMe drives to the tertiary riser.
4. Primary or secondary riser, connector in slot 2 and 3 for GPU support. Supports FHHL cards and bus width x16, x16, connector width x16, x16. GPU support available 1H201 8.
5. Supports NVMe drives in primary or secondary location. Supports FHHL cards and bus width x8, x8, x8 connector width x8, x8, x8.
6. Supports up to 4 NVMe drives in tertiary location
7. Riser supporting up to 8 NVMe drives in secondary location.
8. Supports 2x 8 slots in the tertiary location
9. Supports 1x 16 slot in the tertiary location. Supports FHHL card and bus width x16 co nnector width x16.

Embedded management

Description	Option Part Number
HPE iLO Advanced	
HPE iLO advanced including 1-year 24x7 technical support and updates E-LTU	E6U59ABE
HPE iLO advanced including 1-year 24x7 technical support and updates 1-serve r LTU	512485-B21
HPE iLO advanced including 1-year 24x7 technical support and updates flexible quantity LTU	512486-B21
HPE iLO advanced including 1-year 24x7 technical support and updates trackin g LTU	512487-B21

Description	Option Part Number
HPE iLO advanced including 3-year 24x7 technical support and updates E-LTU	E6U64ABE
HPE iLO advanced including 3-year 24x7 technical support and updates 1-server LTU	BD505A
HPE iLO advanced including 3-year 24x7 technical support and updates flexible quantity LTU	BD506A
HPE iLO advanced including 3-year 24x7 technical support and updates tracking LTU	BD507A
HPE iLO Advanced Security	
HPE iLO advanced premium security upgrade electronic license with 3-year support on licensed features	Q7E12AAE
HPE iLO advanced premium security edition license with 1-year support on licensed features	Q7E31A
HPE iLO advanced premium security flexible quantity license with 1-year support on licensed features	Q7E32A
HPE iLO advanced premium security edition electronic license with 1-year support on licensed features	Q7E32AAE
HPE iLO advanced premium security AKA tracking license with 1-year support on licensed features	Q7E35A
HPE iLO advanced premium security upgrade electronic license with 3-year support on licensed features	Q7E12AAE
HPE iLO advanced premium security edition license with 3-year support on licensed features	Q7E33A
HPE iLO advanced premium security flexible quantity license with 3-year support on licensed features	Q7E34A
HPE iLO advanced premium security edition electronic license with 3-year support on licensed features	Q7E34AAE
HPE iLO advanced premium security AKA tracking license with 1-year support on licensed features	Q7E36A

HPE Converged infrastructure management software

Description	Option Part Number
HPE OneView physical media kit LTU	E5Y37A
HPE OneView standard 1-year 9 x 5 support flexible quantity E-RTU	K6F98AAE
HPE OneView including 3-year 24x7 support physi cal 1-server LTU	E5Y34A
HPE OneView including 3-year 24x7 support track 1 -server LTU	E5Y36A
HPE OneView including 3-year 24x7 support flexibl e quantity E-LTU	E5Y35AAE
HPE OneView upgrade from insight management 3 -year 24x7 support 1-server LTU	F6Q91A
HPE OneView without iLO including 3-year 24x7 su pport 1-server LTU	P8B24A
HPE OneView without iLO including 3-year 24x7 su pport track 1-server LTU	P8B25A
HPE OneView without iLO advance including 3-year 24x7 support track 1-server LTU	E5Y40A
HPE OneView for ProLiant DL server including 3-yea r 24x7 support bundle track 1-server LTU	E5Y44A
HPE OneView for ProLiant DL server including 3-yea r 24x7 support bundle track 1-server LTU	E5Y44A
HPE OneView upgrade from insight management inc luding 3-year 24x7 support flexible quantity E-LTU	E5Y45AAE
HPE OneView without iLO including 3-year 24x7 su pport flexible quantity E-LTU	P8B26AAE

NOTE:

Licenses ship without media. The HPE OneView media kit can be ordered separately or can be downloaded from the below link:

Description	Option Part Number

Click here to view the page for HPE OneView.

HPE PCIe workload accelerator options

Description	Option Part Number
HPE 800GB NVMe WI HHHL PCIe workload accelerator	803195-B21
HPE 1.6TB NVMe WI HHHL PCIe Workload accelerator	803197-B21
HPE 800GB NVMe MU HHHL PCIe workload accelerator	803200-B21
HPE 1.6TB NVMe MU HHHL PCIe workload accelerator	803202-B21
HPE 2.0TB NVMe MU HHHL PCIe workload accelerator	803204-B21

HPE Security

Description	Option Part Number
HPE Gen10 2U bezel kit [1]	867809-B21
HPE Bezel lock kit [1]	875519-B21
HPE Gen10 chassis intrusion detection kit [1]	867824-B21
HPE Trusted Platform Module (TPM) 2.0 Gen10 option [2]	864279-B21

NOTE:

1. This provides a physical connection from the chassis board and hood and detects any p hysical intrusion into the chassis, providing security during the entire supply chain proc ess of shipping, receiving, distribution and operation.

Description	Option Part Number

2. HPE TPM 2.0 option works with Gen10 servers with UEFI mode not legacy mode. It is not compatible with HPE ProLiant Gen8 servers or earlier generation variants.

   - HPE server systems can have a TPM module (Of any type) installed only once. It ca nnot be replaced with any other TPM module.
   - There is a FIO setting to allow this TPM module to operate in a TPM 1.2 mode (87 2108-B21).

Controllers

Description	Option Part Number
Performance RAID Controllers	
HPE Smart Array P824i-p MR Gen10 (24 Internal lanes/4GB cache/Cac heCade) 12G SAS PCIe controller [1]	870658-B21
HPE Smart Array P816i-a SR Gen10 (16 Internal lanes/4GB cache/Smar tCache) 12G SAS modular controller [1]	804338-B21
HPE Smart Array P408i-a SR Gen10 (8 Internal lanes/2GB cache) 12G SAS modular controller [2]	804331-B21
HPE Smart Array P408i-p SR Gen10 (8 Internal lanes/2GB cache) 12G SAS PCIe plug-in controller [2]	830824-B21
HPE Smart Array P408e-p SR Gen10 (8 External lanes/4GB cache) 12G SAS PCIe plug-in controller [2]	804405-B21
Essential RAID Controllers	
HPE Smart Array E208i-a SR Gen10 (8 Internal lanes/no cache) 12G SA S modular controller [3]	804326-B21
HPE Smart Array E208i-p SR Gen10 (8 Internal lanes/no cache) 12G SA S PCIe plug-in controller [4]	804394-B21
HPE Smart Array E208e-p SR Gen10 (8 External lanes/no cache) 12G SAS PCIe plug-in controller [4]	804398-B21

Description	Option Part Number

NOTE:

1. Does not occupy a PCIe expansion slot and includes SmartCache license. The P816i-a cable ships in the 12LFF chassis only.
2. Does not occupy a PCIe expansion slot
3. Does not occupy a PCIe expansion slot
4. All performance RAID controllers are supported by the HPE Smart storage battery (P0 1366-B21), which supports multiple devices and is sold separately.

Cable

Description	Option Part Number
HPE DL38X/560/580/ML350 Gen10 P824i-p cable kit	P00614-B21
HPE DL385 Gen10 Mini-SAS 3POS cable kit	882100-B21
Optional upgrades	
HPE 96 W smart storage battery (Up to 20 devices) with 145 mm cable kit [1]	P01366-B21

NOTE:

For more information on cabling, please check the below link:

Click here to access the page for HPE ProLiant Gen10 Cabling Matrix.

1. Provides backup power for multiple HPE Smart Array controllers or other devices. Is re quired with performance RAID controllers.

HPE Disk based backup

Description	Option Part Number
HP RDX+ 1TB external backup system	B7B69B
HPE RDX+ external docking system	C8S07B
HPE RDX 2TB USB3.0 external disk backup system	E7X53B
HPE RDX 500GB removable disk cartridge	Q2042A
HPE RDX 1TB removable disk cartridge	Q2044A
HPE RDX 2TB removable disk cartridge	Q2046A
HPE RDX 4TB removable disk cartridge	Q2048A

Rail kits

Description	Option Part Number
HP 2U SFF easy install rail kit	733660-B21
HP 2U LFF easy install rail kit	733662-B21
HP 2U cable management arm for easy install rail kit	733664-B21
HPE 2U SFF ball bearing rail kit	720863-B21
HPE 2U LFF ball bearing rail kit	720864-B21
HPE 2U cable management arm for ball bearing rail kit	720865-B21
Other options	
HPE Rack LED light kit	BW939A
HP kit LCD 1.83 m latch display port cable	G7T29A

HPE USB and SD options

Description	Option Part Number
HPE Enterprise Mainstream Flash Media Kits for Memory Cards	
HPE 8GB dual microSD flash USB drive	741279-B21
HPE 32GB microSD mainstream flash media kit	700139-B21
HPE 8GB microSD enterprise mainstream flash media kit	726116-B21
HPE 8GB USB enterprise mainstream flash media drive key kit	737953-B21
HPE 32GB microSD flash memory card	P21868-B21

HPE Support services

Description	Option Part Number
Installation and Startup Services	
HPE Install ProLiant DL38x(p) service	U4554E
HPE Installation and startup DL38x(p) service	U4555E
Tech Care	
HPE 5 Year Tech Care Essential DL385 Gen10 Service	HV6C8E
HPE 5 Year Tech Care Essential wDMR DL385 Gen10 Service	HV6D3E
HPE 3 Year Tech Care Essential DL385 Gen10 Service	HV6C6E
HPE 3 Year Tech Care Essential wDMR DL385 Gen10 Service	HV6D1E
Proactive care	
HPE 3-year proactive care 24x7 ProLiant DL385 Gen10 service	HC2M2E
HPE 3-year proactive care 24x7 with DMR ProLiant DL385 Gen10 service	HC2M3E

Description	Option Part Number
HPE 3-year proactive care 24x7 with CDMR ProLiant DL385 Gen10 service	HC2M4E
HPE 3-year proactive care CTR ProLiant DL385 Gen10 service	HC2N1E
HPE 3-year proactive care CTR 24x7 with DMR ProLiant DL385 Gen10 service	HC2N2E
HPE 3-year proactive care CTR with CDMR ProLiant DL385 Gen10 service	HC2N3E

Product related documents

.

OS Compatibility

Feature	Description
OS and virtualization software support for ProLiant Servers	• **AMD EPYC 7xx2 Series Processor Family** ◦ Windows Server 2019 ◦ Windows Server 2016 ◦ VMware ESXi 6.5 U3 ◦ VMware ESXi 6.7 U3 ◦ Red Hat Enterprise Linux (RHEL) 7.6 ◦ SUSE Linux Enterprise Server (SLES) 12 SP4 ◦ SUSE Linux Enterprise Server (SLES) 15 SP1 • **AMD EPYC 7xx1 Series Processor Family** ◦ Windows Server 2012 R2 (Most recent version) ◦ Windows Server 2016 (Most recent version) ◦ VMware ESXi 6.5 U1, U2 and 6.7

Feature	Description
	◦ Red Hat Enterprise Linux (RHEL) 7.4 ◦ SUSE Linux Enterprise Server (SLES) 12 SP3

NOTE:

For more information on Hewlett Packard Enterprise certified and supported ProLiant servers for OS and virtualization software and latest listing of software drivers available for the server, visit HPE Server OS and Virtualization Software website. **Click here to access HPE Server Operating Systems and Virtualization Software website**.

Software Compatibility

- Active Health System (AHS)
- AHS viewer
- Smart update
- iLO amplifier pack
- HPE iLO mobile application
- RESTful interface tool
- Scripting tools
- HPE OneView standard
- HPE Systems Insight Manager (HPE SIM)

Useful Links

Description	Direct links
Alerts	**Click here to view " Advisories, Alerts and Bulletins and Notices of HPE ProLiant DL385 Gen10 server".**

Drivers and Software	**Click here to view "Drivers and software of HPE ProLiant DL385 Gen10 server".**
Knowledge article	**Click here to view" Knowledge articles, Troubleshooting, FAQ, How to , Information document of HPE ProLiant DL385 Gen10 server".**
Manuals	**Click here to view "Manuals, Guides,Release notes, Troubleshooting articles and other related document of HPE ProLiant DL385 Gen10 server".**
Videos	**Click here to access " Videos of Remove/Replace, Setup/Installation, Troubleshooting, Management/Operations of HPE ProLiant DL385 Gen10 server".**