RETIRED: This document has been officially retired, and the base products listed herein are now considered obsolete and are no longer available for sale. Consequently, the information contained within may no longer be current. This document is provided exclusively for reference and informational purposes.

Overview

HPE ProLiant DL580 Gen8

The HPE ProLiant DL580 Gen8 Server is an enterprise-grade four socket (4S) x86 server offering breakthrough performance, rock-solid reliability, and compelling consolidation and manageability efficiencies. It is ideal for mission-critical enterprise, business intelligence, and database applications.

Featuring Intel® Xeon® E7-4800/8800 v2 processors, the DL580 Gen8 offers blazing fast results with enhanced processor performance, more memory slots (96 DIMMs), greater IO bandwidth (9 PCIe Gen3.0 slots), and increased storage performance (12 Gbps SAS). HPE ProLiant DL580 Gen8 has security and data protection features for system resiliency that your business can depend on. With intelligent manageability through HPE OneView, iLO 4, and user-inspired features, you get faster, lower cost infrastructure management.

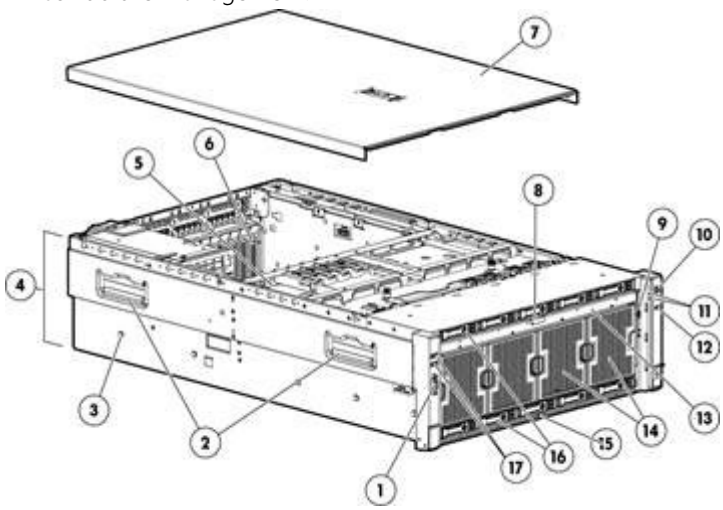

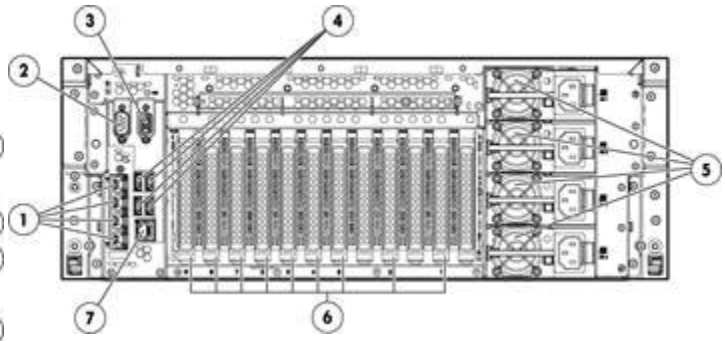

Front View:

1. One front video port
2. Server lifting handles
3. Universal Tool-less "Snap in" sliding rail solution
4. 4U (7" height) form factor
5. Support for up to four Intel® Xeon® 4800/8800 v2 Processors
6. Up to 9 slots supported; all full-length/full-height
7. Quick removal access panel
8. Quick release lever for Processor and Memory drawer
9. Slide out Systems Insight Display
10. Power button
11. Health and Network LEDs
12. Unit ID LED
13. Front accessible Processor and memory drawer
14. 4 Hot Plug Fans (eight rotors with N+1 redundancy)
15. Asset tag
16. Support for up to 10 Small Form-Factor (SFF) drives
17. Two front accessible USB 2.0 ports

Rear View:

1. NIC ports
2. Serial port
3. Video port
4. Four (4) USB ports
5. Hot Plug Redundant Power Supplies (2 or 4 depending on the model)
6. 9 PCIe 3.0 IO Expansion Slots
7. iLO connector

Standard Features

NOTE: For the Standard Features shipped in the "Factory Integrated Models", please see the "Configuration Information - Factory Integrated Models" section.

Processor One or more of the following depending on model	**Fifteen-Core Processors** Intel® Xeon® E7-4890v2 (2.8GHz/15-core/37.5MB/155W) Processor Intel® Xeon® E7-4880v2 (2.5GHz/15-core/37.5MB/130W) Processor Intel® Xeon® E7-4870v2 (2.3GHz/15-core/30MB/130W) Processor Intel® Xeon® E7-8880Lv2 (2.2GHz/15-core/37.5MB/105W) Processor **NOTE: This is a power optimized processor** **Twelve-Core Processors** Intel® Xeon® E7-4860v2 (2.6GHz/12-core/30MB/130W) Processor Intel® Xeon® E7-4850v2 (2.3GHz/12-core/24MB/105W) Processor Intel® Xeon® E7-8857v2 (3.0GHz/12-core/30MB/130W) Processor **NOTE: This is frequency optimized processor suited high performance computing applications** **Ten-Core Processors** Intel® Xeon® E7-4830v2 (2.2GHz/10-core/20MB/105W) Processor Intel® Xeon® E7-8891v2 (3.2GHz/10-core/37.5MB/155W) Processor **NOTE: This is a lower core, higher frequency processor for software licensing cost optimization** **Eight-Core Processors** Intel® Xeon® E7-4820v2 (2.0GHz/8-core/16MB/105W) Processor **Six-Core Processors** Intel® Xeon® E7-4809v2 (1.9GHz/6-core/12MB/105W) Processor Intel® Xeon® E7-8893v2 (3.4GHz/6-core/37.5MB/155W) Processor **NOTE: This is a lower core, higher frequency processor for software licensing cost optimization**
Cache Memory One of the following depending on model	37.5MB (1 x 37.5MB) Level 3 cache (E7-4890 v2, E7-8880Lv2, E7-4880v2, E7-8891v2, E7-8893v2) 30MB (1 x 30MB) Level 3 cache (E7-8857v2, E7-4870v2, E7-4860v2) 24MB (1 x 24MB) Level 3 cache (E7-4850v2) 20MB (1 x 20MB) Level 3 cache (E7-4830v2) 16MB (1 x 16MB) Level 3 cache (E7-4820v2) 12MB (1 x 12MB) Level 3 cache (E7-4809v2)
Chipset	Intel® C602J Chipset Intel® Xeon® E7-4800/8800 v2 Processor Family **NOTE: For more information regarding Intel chipsets, please see the following URL: http://www.intel.com/products/server/chipsets/**
Upgradeability	Up to: Four (4) processors Ninety-six (96) DDR3 DIMM slots Nine (9) PCIe Gen3 expansion slots **NOTE: PCIe slot availability is dependent on the number of processors installed. Please refer to the "Expansion slots" section for more details.** Ten (10) SFF internal HDD/SSD drive bays **NOTE: Five drive bays come standard. An optional backplane kit with five drive bays can be ordered for ten drives.**

Standard Features

	Four (4) redundant hot-plug power supplies	
Memory One of the following depending on model	Type	HPE SmartMemory DDR3 Registered (RDIMM) and Load Reduced (LRDIMM)
	DIMM Slots Available	96 DIMM slots
	Maximum	6TB (96 x 64GB)

NOTE: HPE memory from previous generation servers are not qualified or warranted with this HPE ProLiant Server. HPE SmartMemory is required to realize the memory performance improvements and enhanced functionality listed in this document for Gen8. For additional information, please see the HPE SmartMemory QuickSpecs.

NOTE: LRDIMM and RDIMM are distinct memory technologies and cannot be mixed within a server.

NOTE: Depending on the memory configuration and processor model, the memory speed may run at 1600MHz, 1333MHz, or 1066MHz. Please see Memory Population Table below or the Online Memory Configuration Tool at: http://www.hp.com/go/ddr3memory-configurator.

System Fault Management and Diagnostics

HPE ProLiant DL580 Gen8 offers advanced error recovery, component quarantine, fault tolerance and event reporting features to enable class-leading availability and rock-solid reliability that businesses can depend on. The DL580 Gen8 server firmware features advanced machine check architecture and memory fault tolerance capabilities that customers need for running their mission-critical applications. These advanced fault management features combine with quality components (HPE Qualified Options) and extensive qualification to provide a high degree of system availability.

HPE Advanced Error Recovery

Introduced with the HPE ProLiant DL580 Gen8, HPE Advanced Error Recovery enables applications to recover from uncorrectable errors found in processor, cache and memory during execution. The system firmware works with the operating system and/or hypervisor and/or end-application to enable the optimal recovery response so that the impact of the error can be avoided or minimized. Where such an error would have crashed the system in the past, with HPE Advanced Error Recovery, the system can continue to function with limiting the impact of the error to a killed/re-started thread, process and/or virtual machine.

NOTE:

- **Supported on Intel® E7-4800/8800 v2 based systems only**
- **On select Operating Systems, Hypervisors and end-applications that support Intel Machine Check Architecture Recovery feature.**
  - **Windows Server 2012 R2 and Hyper-V 2012 R2**
  - **Windows Server 2012 (requires Microsoft hotfix 2901012) and Hyper-V 2012**
  - **Redhat Enterprise Linux 6.4 and later**
  - **SLES 11 SP3 and later**

HPE Memory Quarantine

HPE Memory Quarantine Identifies memory regions containing uncorrectable hardware errors by using a patrol scrubber and isolates the bad memory location before it affects other data. If an error is found, the hardware attempts to correct it. If the hardware cannot correct the error, the platform firmware notifies the operating system. Depending on the state of the memory pages associated with the identified memory region, the OS or hypervisor may take those pages out of the available pool. If the memory pages are already committed to a virtual machine (VM), the OS or hypervisor may choose to shut down the associated VM (Guest OS) or cause a Machine Check Exception to the Guest OS. The associated VM (Guest OS) might in turn close down the affected thread or process or it might shut

Standard Features

down on its own. You can restart the halted VM or process once you replace the bad memory at the server's next maintenance cycle.

NOTE:

- **Supported on Intel® E7-4800/8800 and E7 v2 based systems only**
- **On select Operating Systems, Hypervisors and end-applications that support Machine Check Architecture Recovery functionality.**
  - **Windows Server 2012 R2 and Hyper-V 2012 R2**
  - **Windows Server 2012 (requires Microsoft hotfix 2901012) and Hyper-V 2012**
  - **Windows Server 2008 R2 and Hyper-V 2008 R2**
  - **Windows Server 2008 and Hyper-V 2008**
  - **Redhat Enterprise Linux 6.4**
  - **SLES 11 SP3**

HPE Advanced Error Containment

The DL580 Gen8 features advanced PCIe error containment capability that prevents corrupted data propagation. If data corruption is found on the PCIe bus, the system re-sets the PCIe root port and re-starts the transaction. This feature helps protect customer data and prevents the error from creating a chain of failures across the datacenter.

NOTE:

- **Supported on Intel® E7-4800/8800 and E7 v2 based systems only**

HPE Advanced Fault Resiliency

- Double Data Device Correction (DDDC+1) - Detects and corrects up to two DRAM chip failures for every x4 DIMM plus single bit error in the server. DDDC requires memory lockstep mode and may impact performance to varying degrees depending on workload memory access characteristics.
  NOTE: Supported on Intel® E7-4800/8800 based systems only.
- Single Data Device Correction (SDDC+1) - Detects and corrects one DRAM chip failure for every x4 DIMM in the server. Further corrects single-bit errors after one DRAM chip failure. SDDC is supported in performance mode and does not impact system performance.
  NOTE: Supported on Intel® E7-4800/8800 based systems only.
- Online Memory Sparing - Tracks excessive number of correctable errors and copies the contents of an unhealthy rank to an available spare rank in advance of multi-bit or persistent single-bit failures that may result in future uncorrectable faults. Since a DIMM or a rank is needed to perform sparing, this technique reduces the total amount of available memory by the amount of memory used for sparing.
- Memory Mirroring - System maintains two copies of all data. If an uncorrectable memory error occurs, the system automatically retrieves the good data from the mirrored (redundant) copy. Memory Mirroring consumes 50% of the system memory capacity.

NOTE: Memory mirroring will be supported in a system firmware update post initial launch.

- Redundant Interconnects and Failover - The DL580 Gen8 system and Intel® Xeon® E7-4800/8800 v2 processors combine to provide a high degree of fault tolerance and failover capabilities for key processor-processor or memory-processor links or clocks.
- Hot-plug redundant power supplies and hot-plug fans - The DL580 Gen8 server features N+N redundant power supplies and N+1 rotor (each fan module contains two rotors)

Standard Features

redundancy to keep your system running in the unlikely case a power supply or rotor malfunctions.

- Each fan contains two independent rotors. If one rotor fails, system continues operation in a degraded condition with remaining rotors. If two rotors fail, system initiates an OS shutdown. Two rotor failures is a highly unlikely event.
- If a fan module (i.e. two rotors) is removed as a hot-plug event, the replacement fan module must be installed within approximately 60 seconds before the system initiates an OS shutdown.

FlexibleLOM

HPE ProLiant Gen8 servers offer a new flexible network technology - FlexibleLOMs, which offers customers a choice of 1Gb, 10Gb, or 10Gb base-T Ethernet or converged networking in their embedded adapter.
HPE Ethernet 1Gb 4-port 331FLR FIO Adapter
HPE Ethernet 1Gb 4-port 366FLR FIO Adapter
HPE Ethernet 10Gb 2-port 533FLR-T FIO Adapter
HPE FlexFabric 10Gb 2-port 534FLR-SFP+ FIO Adapter
NOTE: This adapter does not support FCOE Boot from SAN functionality on VMWare and FCOE with RHEL 5.9.
HPE Ethernet 10Gb 2-port 560FLR-SFP+ FIO Adapter
HPE Ethernet 10Gb 2-port 561FLR-T FIO Adptr
HPE IB FDR/EN 40Gb 2P 544+FLR-QSFP Adptr
NOTE: For additional details see the Networking Section of this document.
NOTE: Wake-on-Lan feature is not supported on the DL580 Gen8 with FlexLOMs

Expansion Slots

NOTE: Up to 9 slots supported; all full-length/full-height. Standard: 4 PCI-E 3.0 x8, 5 PCI-E 3.0 x16.

Processor	Expansion Slot #	Technology	Width	Connector Width*	Bus / Dev Number**	Form Factor	Notes
4	1	PCIe 3.0	x16	x16	C0/03/0	FH/FL	N/A
4	2	PCIe 3.0	x16	x16	C0/02/0	FH/FL	N/A
3	3	PCIe 3.0	x16	x16	80/03/0	FH/FL	N/A
3	4	PCIe 3.0	x8	x16	80/02/0	FH/FL	N/A
3	5	PCIe 3.0	x8	x16	80/02/1	FH/FL	N/A
2	6	PCIe 3.0	x16	x16	40/03/0	FH/FL	N/A
2	7	PCIe 3.0	x8	x16	40/02/0	FH/FL	N/A
2	8	PCIe 3.0	x8	x16	40/02/1	FH/FL	N/A
1	9	PCIe 3.0	x16	x16	00/03/0	FH/FL	N/A

NOTE: PCIe slot availability is dependent on the number of processors installed.
*** Default bus assignment. Inserting cards with PCI bridges may alter the actual bus assignment number.**
**** Slots are enumerated differently based on OS. MS OS's enumerate from lowest to highest Device ID by bus (starting with the lowest bus).**
FL= Full length; FH = Full height.

Storage Controller
One of the following depending on model

HPE Smart Array P830i/2G FBWC Controller
The Flash Backed Write Cache (FBWC) increases cache data retention capabilities from two days of

Standard Features

existing battery backed write cache (BBWC) to infinite data retention.

- Delivers 12 Gb/s line rate performance
- Standard on all Models
- Supports HPE Secure Encryption as an option
- Transportable data protection
- Increases overall controller performance

NOTE: Please refer to the HPE Smart Array P830 Controller QuickSpecs for more information.

Internal Storage Devices	Hard Disk Drive Backplane	Internal SAS lower and upper backplanes support up to ten SFF hard disk drives or solid state drives
	NOTE: For CTO models, five (5) lower drive bays ship standard and five (5) upper drive bays can be ordered separately with a drive backplane kit. For pre-configured models, please refer to the pre-configured models section below.	
	Diskette Drive	None
	Optional Optical Drive	None
	Hard Drives	None ship standard

Maximum Internal Storage	Hot Plug SFF SAS	12 TB	10 x 1.2 TB
	Hot Plug SFF SAS SSD	16 TB	10 x 1.6 TB
	Hot Plug SFF SATA SSD	8 TB	10 x 800 GB

Interfaces	Serial	1
	Video	1 front; 1 rear
	Network RJ-45	4
	iLO 4 Remote Management	1
	micro-SD Slot	1
	USB 2.0 Ports	8 total: 2 front; 4 rear; 2 internal

Industry Standard Compliance

ACPI 2.0. Compliant
PCIE 2.0 Compliant
PXE Support
WOL Support
NOTE: Not supported with FlexLOMs on DL580 Gen8
Physical Address Extension (PAE) Support
Microsoft® Logo certifications
USB 2.0 Support

Server Power Cords

Server ships with high-voltage server to PDU power cord
NOTE: For a full list of optional HPE power cords please go to: http://www.hp.com/products/powercords

Common Slot Power Supply
One of the following depending on power requirements

HPE 1500W Common Slot Platinum Plus Hot Plug Power Supply
HPE 1200W Common Slot Platinum Plus Hot Plug Power Supply
NOTE: 1500W power supply supports high line voltage only
NOTE: A minimum of two (2) power supplies are required. Four (4) 1500W power supplies offers N+N redundancy for highly loaded configurations.

Standard Features

		Prior to making a power supply selection it is highly recommended that the HPE Power Advisor is run to determine the right size power supply for your server configuration. The HPE Power Advisor is located at: http://www.hp.com/go/hppoweradvisor. **The HPE Common Slot (CS) power supplies allow for commonality of power supplies across a wide range of ProLiant and Integrity servers, as well as HPE Storage solutions, and are designed to provide the highest power supply efficiency without degrading system performance. HPE CS power supplies are tested by the Electric Power Research Institute (EPRI) and certified through the ECOS 80 Plus power supply program. HPE CS power supply options provide efficiency ratings of up to 94% (80 Plus Platinum) and are available in three power output options - 460W, 750W, and 1200W - allowing the customer to "right-size" a power supply for their specific server configuration. All HPE Common Slot power sources are UL, CE Mark Compliant, hot-plug and support redundant configurations.** **HPE CS Platinum Plus power supplies are required when enabling the HPE Intelligent Power Discovery (IPD) solution. IPD is the first technology to create an automated, energy-aware network between IT systems and facilities. This allows your company to reclaim millions of dollars in wasted power capacity and downtime costs across data centers. For more information on the HPE IPD solution, go to http://www.hp.com/go/ipd.** **NOTE: Mixing of power supplies in the same server is not supported. All power supplies must be of the same output and efficiency rating. If non-matched power supplies are inserted you will get errors and operation will fail.**
System Fans		4 Hot Plug Fans (eight rotors with N+1 redundancy)
Graphics		Integrated Matrox G200 video standard 1280 x 1024 (32 bpp) 1920 x 1200 (16 bpp) HPE iLO 4 On System Management Memory 16 MB Flash 256 MB DDR 3 with ECC (112 MB after ECC and video)
Form Factor		4U rack
HPE Server UEFI ROM	**Legacy Mode or Unified Extensible Firmware Interface (UEFI) Mode**	Hewlett Packard Enterprise's ProLiant System BIOS is an EDK2 UEFI solution, and adheres to the latest revisions of UEFI Class 2 specifications which supports both legacy boot and UEFI boot operation. The HPE ProLiant DL580 Gen8 defaults to legacy boot operation and can be factory or field configured for UEFI boot operation. **NOTE: For UEFI boot operation, boot environment and OS image installations should be configured properly to support UEFI.** **NOTE: For more information on the HPE ProLiant System BIOS and UEFI, see the UEFI Information Library: http://www.hp.com/go/uefi/docs.** **NOTE: HPE UEFI FIO Setting (758959-B21) can be selected to configure the system in UEFI mode in the factory.**

Standard Features

To modify the server configuration ROM default settings, press F9 in the HPE ProLiant POST screen to enter the UEFI System Utilities screen. By default, the System Utilities menus are in the English language.

UEFI enables numerous new capabilities, including both industry standard functionality and features specific to HPE ProLiant servers. Following are some of the features that UEFI enables and that the HPE ProLiant DL580 Gen8 can support when configured for UEFI boot operation:

- Secure Boot - A new feature in which the system firmware, option card firmware, operating systems, and software collaborate to greatly enhance platform security.
- Operating system specific functionality - Microsoft Windows 2012 supports several features only when installed in UEFI mode.
- Support for > 2.2 TB (using GPT) boot drives - Such drives could previously only be used for boot drives when using RAID solutions such as HPE Smart Array.
- UEFI Shell - Provides a pre-boot environment for running scripts and tools. The HPE ProLiant UEFI Shell provides both standard capabilities as well as numerous enhancements.
- PXE boot support for IPv6 networks.
- PXE Multicast Boot allowing for faster PXE deployments for large numbers of servers.
- Boot support for option cards that only support a UEFI option ROM.

NOTE:

- **When the server is configured for UEFI Boot Mode, PXE servers must be configured with a UEFI boot image.**
- **When the server boots in UEFI mode, it does not boot media with a legacy OS installation. This includes DOS targets and Windows or Linux systems installed in Legacy mode. The reverse is also true for servers that boot in Legacy mode.**
- **If Microsoft Windows 2008 or Windows 2008 R2 is used in UEFI Boot Mode, UEFI Optimized Mode must be disabled (this option is enabled by default). This is required to work around an issue in Windows 2008 / 2008 R2 that requires legacy BIOS components necessary for video operations in Windows.**

Operating Systems and Virtualization Software Support for ProLiant Servers

Microsoft Windows Server
Red Hat Enterprise Linux (RHEL)
SUSE Linux Enterprise Server (SLES)
VMware

NOTE: For more information on the HPE Certified and Supported ProLiant Servers for OS and Virtualization Software and latest listing of software drivers available for your server, please visit our Support Matrix at: http://www.hp.com/go/ossupport and our driver download page http://www.hp.com/support/DL580Gen8

On System Management

HPE iLO Management

HPE iLO Management is a comprehensive set of embedded management features supporting the complete lifecycle of the server, from initial deployment, through ongoing management, to service alerting and remote

Standard Features

		support. HPE iLO Management Engine comes standard on all HPE ProLiant Gen8 servers. The HPE iLO Management portfolio includes: **HPE iLO:** The HPE iLO (Integrated Lights-Out) management processor is the core foundation for the HPE iLO Management Engine **HPE Agentless Management:** Provides built in server health monitoring and alerting capability without OS agents, that starts working the moment a power cord and an Ethernet cable are connected. **HPE Active Health System:** Always on, continuous monitoring for increased stability and shorter downtimes; 100% configuration history; Health and service alerts and easy export and upload to Service and Support. **HPE Intelligent Provisioning:** Lets customers provision and configure a single server without any separate media. To start Intelligent Provisioning: Press the F10 key during the ProLiant Gen8 server boot Process. Please go to the Intelligent Provisioning website at **http://www.hp.com/go/intelligentprovisioning** for additional information and to view usage videos. Use the Service Pack for ProLiant (SPP) at **http://www.hp.com/go/spp** to get firmware and software updates. **HPE iLO Mobile App:** Enables the ability to access, deploy, and manage your server anytime from anywhere from select smartphones and mobile devices. For additional information please visit: **http://www.hp.com/go/ilo/mobileapp** **NOTE: For more information, visit: http://www.hp.com/go/ilo or HPE iLO Management Engine technologies whitepaper**
HPE Insight Management	**HPE Service Pack for ProLiant**	HPE Service Pack for ProLiant (SPP) and HPE Smart Update Manager (HPE SUM) provide a comprehensive approach to firmware and system software maintenance. Together they provide better operating stability and ensure maximum uptime. The SPP will be updated at a predictable cadence, typically coinciding with new Hewlett Packard Enterprise server hardware launches. By enabling firmware to be updated online and integrating firmware and system software updates in one operation, HPE SUM and the SPP offer faster updates of individual servers and dramatically faster updates of entire BladeSystem enclosures. Further improving system uptime and stability is the fact that Hewlett Packard Enterprise provides 12 months of support for each Service Pack for ProLiant release. The user experience around HPE SUM and the SPP has been improved in several ways, starting with the web download. A single web page provides access to a single download containing both the latest version of HPE SUM and the latest SPP. Optional smaller subsets with only specific types of servers or specific operating systems are offered to save on download time. The HPE SUM application provides a straightforward, intuitive user interface that guides the user through the steps of discovery, analyses and update, providing comprehensive information on available updates, criticality and interdependencies. This information is also available in reports. By providing the option of multiple local or shared repositories which can be easily updated from hp.com, HPE SUM provides the tools to optimize stability and consistency throughout the company. While HPE SUM and the SPP recommend the combinations of firmware and system software that Hewlett Packard Enterprise has found to be the best practice, the application gives customers the flexibility to set their own specific

Standard Features

baseline.

The Service Pack for ProLiant has been rigorously tested with specific attention for interaction between firmware, drivers and agents both within the server as well as in interaction with the BladeSystem enclosure components (Onboard Administrator and Virtual Connect). This testing ensures the highest quality as well as providing the input for HPE SUM to deploy updates taking into account all interdependencies, when determining the correct updates and order of update deployment.

NOTE: The Service Pack for ProLiant (which includes HPE SUM) can be downloaded from http://www.hp.com/go/spp/download. More information can be found: http://www.hp.com/go/SmartUpdate, http://www.hp.com/go/spp and http://www.hp.com/go/hpsum

Intelligent Manageability	HPE Systems Insight Manager SmartStart Redundant ROM Remote Flash ROM Management Agents Integrated Management Log (IML) Automatic Server Recovery-2 (ASR-2) ROM-Based Setup Utility (RBSU) Dynamic Sector Repairing (with Smart Array Controllers) Drive Parameter Tracking (with Smart Array Controllers) Pre-Failure Warranty (covers processors, SAS hard drives and memory) Redundant/adaptive load balancing NIC Support Hot Spare Boot **NOTE: Upon the event of a failed processor in a multi-processing environment, the system will automatically reboot and use the remaining good processor(s).**
HPE Insight Online	HPE Insight Online is a new capability available through the HPE Support Center portal for one stop, secure access to product and HPE support information specific to your IT environment. Insight Online can automatically display devices remotely monitored by HPE Insight Remote Support. With Insight Online's easy navigation you can efficiently track your IT support contracts and device status from anywhere and at anytime. **http://www.hp.com/go/insightonline**
HPE Proactive Insight experience	Prevent problems with innovative, automated monitoring tools and proactive services. The HPE Proactive Insight experience consist of using Insight Online, Insight Remote Support, and Proactive Care Support Service as one integrated solution. The Proactive Insight experience provides you with expert advice and personalized, cloud-based automated IT support, helping to prevent unplanned down time and solve problems quickly. For more information, visit: **http://www.hp.com/go/proactiveinsightexperience**
Security	Power-on password Keyboard password External USB port enable/disable Network Server Mode Serial interface control Administrator's password Trusted Platform Module (TPM) Intel® Secure Key HPE Secure Encryption (Smart Array Controller)

Standard Features

	HPE Advanced Data Guard (Smart Array Controller)
Warranty	This product is covered by a global limited warranty and supported by HPE Services and a worldwide network of Hewlett Packard Enterprise Authorized Channel Partners resellers. Hardware diagnostic support and repair is available for three years from date of purchase. Support for software and initial setup is available for 90 days from date of purchase. Enhancements to warranty services are available through HPE Pointnext operational services or customized service agreements. Hard drives have either a one year or three year warranty; refer to the specific hard drive QuickSpecs for details. **NOTE: Server Warranty includes 3-Year Parts, 3-Year Labor, 3-Year Onsite support with next business day response. Warranty repairs may be accomplished through the use of Customer Self Repair (CSR) parts. These parts fall into two categories: 1) Mandatory CSR parts are designed for easy replacement. A travel and labor charge will result when customers decline to replace a Mandatory CSR part; 2) Optional CSR parts are also designed for easy replacement but may involve added complexity. Customers may choose to have Hewlett Packard Enterprise replace Optional CSR parts at no charge. Additional information regarding worldwide limited warranty and technical support is available at:** **http://h18004.www1.hp.com/products/servers/platforms/warranty/index.html**

Optional Features

HPE Insight management	HPE Insight Control	HPE Insight Control, a product option, delivers essential infrastructure management that can help save time and money by making it easy to deploy, migrate, monitor, remote control, and optimize your IT infrastructure through a single, simple management console. For more information, see **http://www.hp.com/go/insightcontrol**. HPE Insight Control includes one year of 24 x 7 HPE Software Technical Support and Update Service ensuring rapid access to Hewlett Packard Enterprise support staff and proactive delivery of software updates. For more information about this service, see: **http://www.hp.com/services/insight**.
	HPE iLO Advanced	HPE Integrated Lights-Out Advanced License a product option, providing smart remote server management without compromise. iLO Advanced unlocks the full set of remote administration functionality for all HPE ProLiant servers by activating the full Virtual Keyboard Video and Mouse remote console, multi-user collaboration, console record and replay, GUI-based and scripted virtual media and virtual folders, and enhanced security and power management functionality. For more information, see: **http://www.hp.com/go/iloadvance**
	HPE Matrix Operating Environment	The HPE Matrix Operating Environment (Matrix OE) for ProLiant and Integrity servers is an integrated command center that helps you instantly adjust to dynamic business demands. This advanced infrastructure management software lets you reduce the cost of common data center tasks by up to 40 percent while keeping pace with your changing business. The HPE Matrix OE includes the automated provisioning, optimization, and recovery management capabilities for HPE CloudSystem Matrix, the ideal platform for private cloud and Infrastructure as a Service (IaaS). **NOTE: For more information, visit: http://www.hp.com/go/matrixoe**
High Performance Clusters	HPE Cluster Platforms	HPE Cluster Platforms are specifically engineered, factory-integrated large-scale ProLiant clusters optimized for High Performance Computing, with a choice of servers, networks and software. Operating system options include specially priced offerings for Red Hat Enterprise Linux and SUSE Linux Enterprise Server, as well as Microsoft Windows HPC Server. A Cluster Platform Configurator simplifies ordering. **http://www.hp.com/go/clusters**
	HPE HPC Interconnects	High Performance Computing (HPC) interconnect technologies are available for this server as part of the HPE Cluster Platform portfolio. These high-speed InfiniBand and Gigabit interconnects are fully supported by Hewlett Packard Enterprise when integrated within an HPE cluster. Flexible, validated solutions can be defined with the help of configuration tools. **http://www.hp.com/techservers/clusters/ucp/index.html**
	HPE Insight Cluster Management Utility	HPE Insight Cluster Management Utility (CMU) is an HPE-licensed and HPE-supported suite of tools that are used for lifecycle management of hyperscale clusters of Linux ProLiant systems. CMU includes software for the centralized provisioning, management and monitoring of nodes. CMU makes the administration of clusters user friendly, efficient, and effective. **http://www.hp.com/go/cmu**
Storage Software	Whether you need to solve a specific data protection, archiving, or storage command and control challenge, or deliver on strategic consolidation, compliance, or continuity initiatives, look no further than HPE storage software. Our storage software helps you reduce costs, simplify storage infrastructure,	

Optional Features

protect vital assets and respond faster to business opportunities.

Storage software that gets the job done:

- **Data Protection and Recovery Software**
  Whether you're a large enterprise or a smaller business, HPE data protection and recovery software will cost-effectively protect you against disaster and ensure business continuity.
- **Data Archive and Migration Software**
  The HPE storage software enables you to comply with data retention and retrieval requirements, improve application performance, and reduce costs by efficiently migrating infrequently accessed or less valuable data to lower cost storage.
- **Storage Resource Management Software (SRM)**
  The HPE storage resource management software reduces operational costs and provides the command and control foundation you need to efficiently manage and visualize your physical and virtual environments.
- **Data Replication Software**
  Hewlett Packard Enterprise offers array-based and host-based replication software for use in disaster recovery, testing, application development and reporting.
- **Storage Device Management Software**
  Maximize your investment in HPE storage and networking with software that enables hardware-specific configuration, performance tuning and connectivity management.
- **HPE StoreVirtual VSA**
  With HPE StoreVirtual VSA you can use the power of virtualization to turn a set of heterogeneous and disconnected physical disk drives in your servers and storage devices into a single pool of logical storage capacity.

NOTE: For more information available Storage Software including QuickSpecs, please see: http://www.hp.com/go/storage/software.

Factory Express Portfolio for Servers and Storage

HPE Factory Express offers configuration, customization, integration and deployment services for Hewlett Packard Enterprise servers and storage products. Customers can choose how their factory solutions are built, tested, integrated, shipped and deployed.

Factory Express offers service packages for simple configuration, racking, installation, complex configuration and design services as well as individual factory services, such as image loading, asset tagging, and custom packaging. Hewlett Packard Enterprise products supported through Factory Express include a wide array of servers and storage: HPE Integrity, HPE ProLiant, HPE ProLiant Server Blades, HPE BladeSystem, HPE 9000 servers as well as the MSAxxxx, VA7xxx, EVA, XP, rackable tape libraries and configurable network switches.

For more information on Factory Express services for your specific server model please contact your sales representative or go to: **http://www.hp.com/go/factory-express**.

HPE Simple Configurator

SCE is a guided self service tool to help sales and non technical people provide customers with initial configurations in 3 to 5 minutes. You may then send the configuration on for configuration help, or use in your existing ordering processes. If you require "custom" rack configuration or configuration for products not available in SCE, please contact the HPE Customer Business Center or an Authorized Partner for assistance. **http://www.hp.com/products/configurator**

Service and Support

Service and Support

HPE Technology Services for Industry Standard Servers
HPE Technology Services delivers confidence, reduces risk and helps customers realize agility and stability. Connect to Hewlett Packard Enterprise to help prevent problems and solve issues faster. Our support technology lets you to tap into the knowledge of millions of devices and thousands of experts to stay informed and in control, anywhere, any time.

Protect your business beyond warranty with HPE Pointnext operational services
HPE Pointnext operational services enable you to order the right service level, length of coverage and response time as you purchase your new server, giving you full entitlement for the term you select.

Recommended HPE Pointnext operational services for your Hewlett Packard Enterprise product

Optimized Care

HPE Proactive Care with 6 hour call-to-repair commitment, three year Care Pack Service
HPE Proactive Care helps prevent problems and stabilize IT by utilizing secure, real-time, predictive analytics and proactive consultations when your products are connected to Hewlett Packard Enterprise. This Care Pack Service combines three years' proactive reporting and advice with our highest level reactive coverage and enhanced escalation management, the Hewlett Packard Enterprise 24x7, six hour call-to-repair hardware commitment. Hewlett Packard Enterprise is the only leading manufacturer who makes this level of coverage available as a standard service offering for your most valuable servers. Service includes 24x7 collaborative software support for leading industry standard software running on your HPE ProLiant server.
https://www.hpe.com/h20195/v2/getpdf.aspx/4aa3-8855enw.pdf

Standard Care

HPE Proactive Care with 24x7 coverage, three year Care Pack Service
HPE Proactive Care helps prevent problems and stabilize IT by utilizing secure, real-time, predictive analytics and proactive consultations when your products are connected to Hewlett Packard Enterprise. This Care Pack Service combines three years' proactive reporting and advice with our 24x7 coverage and enhanced escalation management, four hour hardware response time and two hour call back for software questions on leading industry standard software running on your HPE ProLiant server. **https://www.hpe.com/h20195/v2/getpdf.aspx/4aa3-8855enw.pdf**

Related Services

HPE ProLiant Server Hardware Installation
Provides for the basic hardware installation of Hewlett Packard Enterprise branded servers, storage devices and networking options to assist you in bringing your new hardware into operation in a timely and professional manner.
http://h20195.www2.hp.com/V2/GetPDF.aspx/5981-9356EN.pdf

Factory Express for Servers and storage
HPE Factory Express offers configuration, customization, integration and deployment services for Hewlett Packard Enterprise servers and storage products. Customers can choose how their factory solutions are built, tested, integrated, shipped and deployed. For more information on Factory Express services for your specific server model please contact your sales representative or go to: **http://www.hp.com/go/factory-express**.

Data Privacy Services
Protect your data through better media management. HPE Data privacy services help manage and protect sensitive data to reduce the risk of unauthorized access to private information and help meet compliance requirements. Our retention services allow you to keep drives and other devices upon failure, our removal services provide convenient data sanitization and our recovery services allow you

Service and Support

	to safely retire IT assets and capture any remaining value from the hardware. **http://www.hp.com/services/dataprivacy** Additional HPE Pointnext operational services can be found at: **http://www.hp.com/go/cpc**
Get connected to Hewlett Packard Enterprise to improve your support experience	Prevent problems with innovative, automated monitoring tools and proactive services. Combining Proactive Care Services with our remote support technology such as Insight Online provides you with expert advice and personalized, cloud-based automated IT support, helping to prevent unplanned down time and solve problems quickly. For more information, visit: **http://www.hp.com/go/proactiveinsightexperience**
HPE Support Center	Personalized online support portal with access to information, tools and experts to support Hewlett Packard Enterprise business products. Submit support cases online, chat with Hewlett Packard Enterprise experts, access support resources or collaborate with peers. Learn more **http://www.hp.com/go/hpsc** Hewlett Packard Enterprise's Support Center Mobile App allows you to resolve issues yourself or quickly connect to an agent for live support. Now, you can get access to personalize IT support anywhere, anytime. HPE Insight Remote Support and HPE Support Center are available at no additional cost with a HPE warranty, HPE Care Pack or HPE contractual support agreement. **NOTE: HPE Support Center Mobile App is subject to local availability.**
Parts and Materials	Hewlett Packard Enterprise will provide HPE-supported replacement parts and materials necessary to maintain the covered hardware product in operating condition, including parts and materials for available and recommended engineering improvements. Parts and components that have reached their maximum supported lifetime and/or the maximum usage limitations as set forth in the manufacturer's operating manual, product quick-specs, or the technical product data sheet will not be provided, repaired, or replaced as part of these services. The defective media retention service feature option applies only to Disk or eligible SSD/Flash Drives replaced by Hewlett Packard Enterprise due to malfunction.
For more information	To learn more on HPE ProLiant servers and HPE BladeSystem servers, please contact your Hewlett Packard Enterprise sales representative or Hewlett Packard Enterprise Authorized Channel Partner. Or visit: **http://www.hp.com/services/proliant**

Pre-configured Models

NOTE: For the Standard Features shipped in the "Factory Integrated Models", please see the "Configuration Information - Factory Integrated Models" section.
NOTE: Pre-configured models ship with the configurations below. Options can be selected from the Core or Additional options section of this QuickSpecs.
NOTE: Hewlett Packard Enterprise does not allow factory integration of options into pre-configured models. Any additional options purchased will be shipped separately.
NOTE: If you desire a custom configuration please see "Configuration Information - Factory Integrated Models" section of this QuickSpecs.

High Performance Models

HP ProLiant DL580 Gen8 E7-4890v2 4P 128GB-R P830i SAS 5 SFF 1500W RPS Server 728544-001	**Processor(s)**	(4) Intel® Xeon® E7-4890v2 (2.8GHz/15-core/37.5MB/155W) Processors
	Cache Memory	37.5MB (1 x 37.5MB) Level 3 cache
	Memory	128GB (16 x 8GB DIMMs) PC3-14900R DIMMs (DDR3) installed in (8) Memory Cartridges
	IO Expansion	(9) PCIe Gen3.0 I/O Expansion slots (5 x16 slots; 4 x8 slots)
	Network Controller	HPE FlexFabric 10Gb 2P 534FLR-SFP+ Adapter
	Storage Controller	HPE Smart Array P830i/2GB FBWC 12 Gbps SAS controller
	Bays and Hard Drives	Ten (10) SFF HDD/SSD drive bays. No drives ship standard
	Optical Drive	None
	Power Supply	(4) HPE 1500W Common Slot Platinum Plus Hot Plug Power Supplies
	Fans	4 Hot Plug Fans (eight rotors with N+1 redundancy)
	Integrated Lights Out	Integrated Lights-Out 4 (iLO 4) ships standard
	Insight Control	HPE Insight Control No Media single server license, including 1 year of 24x7 Technical Support and Updates
	Form Factor	Rack 4U (rail kit and cable management arm is included)
	BIOS	Legacy BIOS (default) or UEFI BIOS (field configurable)
	Warranty	Server Warranty includes 3-Year Parts, 3-Year Labor, 3-Year Onsite support with next business day response
HP ProLiant DL580 Gen8 E7-4850v2 4P 128GB-R P830i/2G 534FLR-SFP+ 1500W RPS Svr 728546-001	**Processor(s)**	(4) Intel® Xeon® E7-4850v2 (2.3GHz/12-core/24MB/105W) Processors
	Cache Memory	24MB (1 x 24MB) Level 3 cache
	Memory	128GB (16 x 8GB DIMMs) PC3-14900R DIMMs (DDR3) installed in (8) Memory Cartridges
	IO Expansion	(9) PCIe Gen3.0 I/O Expansion slots (5 x16 slots; 4 x8 slots)
	Network Controller	HPE FlexFabric 10Gb 2P 534FLR-SFP+ Adapter
	Storage Controller	HPE Smart Array P830i/2GB FBWC 12 Gbps SAS controller
	Bays and Hard Drives	Ten (10) SFF HDD/SSD drive bays. No drives ship standard
	Optical Drive	None
	Power Supply	(4) HPE 1500W Common Slot Platinum Plus Hot Plug Power Supplies
	Fans	4 Hot Plug Fans (eight rotors with N+1 redundancy)
	Integrated Lights Out	Integrated Lights-Out 4 (iLO 4) ships standard
	Insight Control	HPE Insight Control No Media single server license, including 1 year of 24x7 Technical Support and Updates

Pre-configured Models

Form Factor	Rack 4U (rail kit and cable management arm is included)
BIOS	Legacy mode (default) or UEFI BIOS (field configurable)
Warranty	Server Warranty includes 3-Year Parts, 3-Year Labor, 3-Year Onsite support with next business day response

Base Models

HP ProLiant DL580 Gen8 E7-4809v2 2P 64GB-R P830i/2G 331FLR 1200W PS Server
728547-001

Processor(s)	(2) Intel® Xeon® E7-4809v2 (1.9GHz/6-core/12MB/105W) Processors
Cache Memory	12MB (1 x 12MB) Level 3 cache
Memory	64GB (8 x 8GB DIMMs) PC3-14900R DIMMs (DDR3) installed in (4) Memory Cartridges
IO Expansion	(9) PCIe Gen3.0 I/O Expansion slots (5 x16 slots; 4 x8 slots) **NOTE: PCIe slot availability is dependent on the number of processors installed. Please refer to the expansion slots section for more details.**
Network Controller	HPE Ethernet 1Gb 4P 331FLR Adptr
Storage Controller	HPE Smart Array P830i/2GB FBWC 12 Gbps SAS controller
Bays and Hard Drives	Five (5) lower drive bays. No drives ship standard
Optical Drive	None
Power Supply	(2) HPE 1200W Common Slot Platinum Plus Hot Plug Power Supplies
Fans	4 Hot Plug Fans (eight rotors with N+1 redundancy)
Integrated Lights Out	Integrated Lights-Out 4 (iLO 4) ships standard
Form Factor	Rack 4U (rail kit and cable management arm is included)
BIOS	Legacy mode (default) or UEFI BIOS (field configurable)
Warranty	Server Warranty includes 3-Year Parts, 3-Year Labor, 3-Year Onsite support with next business day response

Smart Buy Models

HP ProLiant DL580 Gen8 E7-4830v2 2P 64GB-R P830i/2G 331FLR 1200W RPS Server/S-Buy 746081-S01	**Processor(s)**	(2) Intel® Xeon® E7-4830v2 (2.2GHz/10-core/20MB/105W) Processors
	Cache Memory	20MB (1 x 20MB) Level 3 cache
	Memory	64GB (8 x 8GB DIMMs) PC3-14900R DIMMs (DDR3) installed in (4) Memory Cartridges
	IO Expansion	(9) PCIe Gen3.0 I/O Expansion slots (5 x16 slots; 4 x8 slots) **NOTE: PCIe slot availability is dependent on the number of processors installed. Please refer to the expansion slots section for more details.**
	Network Controller	HPE Ethernet 1Gb 4P 331FLR Adapter
	Storage Controller	HPE Smart Array P830i/2GB FBWC 12 Gbps SAS controller
	Bays and Hard Drives	Five (5) SFF drive bays, upgradeable to ten (10). No drives ship standard
	Optical Drive	None
	Power Supply	Two (2) HPE 1200W Common Slot Platinum Plus Hot Plug Power Supplies
	Fans	Four (4) Hot Plug Fans (eight rotors with N+1 redundancy)
	Integrated Lights Out	Integrated Lights-Out 4 (iLO 4) ships standard
	Form Factor	Rack 4U (rail kit and cable management arm is included)
	BIOS	Legacy BIOS (default) or UEFI BIOS (field configurable)
	Warranty	Server Warranty includes 3-Year Parts, 3-Year Labor, 3-Year Onsite support with next business day response
HP ProLiant DL580 Gen8 E7-4870v2 2P 64GB-R P830i/2G 331FLR 1200W RPS Server/S-Buy 746080-S01	**Processor(s)**	(2) Intel® Xeon® E7-4870v2 (2.3GHz/15-core/30MB/130W) Processors
	Cache Memory	30MB (1 x 30MB) Level 3 cache
	Memory	64GB (8 x 8GB DIMMs) PC3-14900R DIMMs (DDR3) installed in (4) Memory Cartridges
	IO Expansion	(9) PCIe Gen3.0 I/O Expansion slots (5 x16 slots; 4 x8 slots) **NOTE: PCIe slot availability is dependent on the number of processors installed. Please refer to the expansion slots section for more details.**
	Network Controller	HPE Ethernet 1Gb 4P 331FLR Adapter
	Storage Controller	HPE Smart Array P830i/2GB FBWC 12 Gbps SAS controller
	Bays and Hard Drives	Five (5) SFF drive bays, upgradeable to ten (10). No drives ship standard
	Optical Drive	None
	Power Supply	Two (2) HPE 1200W Common Slot Platinum Plus Hot Plug Power Supplies
	Fans	Four (4) Hot Plug Fans (eight rotors with N+1 redundancy)
	Integrated Lights Out	Integrated Lights-Out 4 (iLO 4) ships standard
	Form Factor	Rack 4U (rail kit and cable management arm is included)
	BIOS	Legacy BIOS (default) or UEFI BIOS (field configurable)
	Warranty	Server Warranty includes 3-Year Parts, 3-Year Labor, 3-Year Onsite support with next business day response

Smart Buy Models

HP ProLiant DL580 Gen8 E7-4890v2 2P 64GB-R P830i/2G 331FLR 1200W RPS Server/S-Buy 728551-S01	**Processor(s)**	(2) Intel® Xeon® E7-4890v2 (2.8GHz/15-core/30MB/155W) Processors
	Cache Memory	30MB (1 x 30MB) Level 3 cache
	Memory	64GB (8 x 8GB DIMMs) PC3-14900R DIMMs (DDR3) installed in (4) Memory Cartridges
	IO Expansion	(9) PCIe Gen3.0 I/O Expansion slots (5 x16 slots; 4 x8 slots) **NOTE: PCIe slot availability is dependent on the number of processors installed. Please refer to the expansion slots section for more details.**
	Network Controller	HPE Ethernet 1Gb 4P 331FLR Adapter
	Storage Controller	HPE Smart Array P830i/2GB FBWC 12 Gbps SAS controller
	Bays and Hard Drives	Five (5) SFF drive bays, upgradeable to ten (10). No drives ship standard
	Optical Drive	None
	Power Supply	Two (2) HPE 1200W Common Slot Platinum Plus Hot Plug Power Supplies
	Fans	Four (4) Hot Plug Fans (eight rotors with N+1 redundancy)
	Integrated Lights Out	Integrated Lights-Out 4 (iLO 4) ships standard
	Form Factor	Rack 4U (rail kit and cable management arm is included)
	BIOS	Legacy BIOS (default) or UEFI BIOS (field configurable)
	Warranty	Server Warranty includes 3-Year Parts, 3-Year Labor, 3-Year Onsite support with next business day response

Configuration Information - Factory Integrated Models

NOTE: This section lists some of the steps required to configure a Factory Integrated Model. To ensure only valid configurations are ordered, Hewlett Packard Enterprise recommends the use of a Hewlett Packard Enterprise approved configurator. Contact your local sales representative for information on configurable product offerings and requirements.
NOTE: Factory Integrated Models must start with a CTO Server
NOTE: FIO indicates that this option is only available as a factory installable option.

Step 1: Base Configuration

HPE Models

HP ProLiant DL580 Gen8 Configure-to-order Server 728551-B21

Factory Integrated Models ship with:

4U Server Chassis with front-accessible processor and memory drawer
Intel® 602J Chipset
Embedded HPE Smart Array 12 G P830i Controller
NOTE: FBWC is required and should be selected separately when ordering
(5) Hot-plug SAS/SATA SFF SSD or HDD Bays (Lower)
(9) PCIe Gen3.0 I/O Expansion slots (5 x16 slots; 4 x8 slots)
(8) USB 2.0 ports (2 front, 4 rear, 2 internal)
(2) video ports (1 front, 1 rear)
(1) microSD card slot
(1) Trusted Platform Module (TPM) connector
4 Hot Plug Fans (eight rotors with N+1 redundancy), front accessible
BIOS Legacy mode(default) or Unified Extensible Firmware Interface (UEFI) mode (Optional)
HPE Integrated Lights-Out 4 (iLO4) standard management
HPE iLO4 Embedded Remote Support Technology
HPE Insight Control Server Provisioning
HPE Insight Online
HPE Active Health System
System Insight Display
Rack rails and cable management arm
NOTE: PCIe slot availability is dependent on the number of processors installed. Please refer to the "Expansion slots" section for more details.
NOTE: A minimum of two processors are required. The system may have three or four processors installed.
NOTE: A minimum of two memory cartridges are required (one per processor).
NOTE: A minimum of two memory DIMMs are required per cartridge (minimum of four DIMMs per server).
NOTE: A minimum of two power supplies are required.

Step 2: Choose Required Options (only one of the following from each list unless otherwise noted)

HPE Processors

NOTE: All processor kits contain one processor. A minimum of two processors are required. Select one xxxxxx-L21 and one xxxxxx-B21. Two, three, and four processor configurations are supported.

Fifteen-Core Processors

HP DL580 Gen8 Intel Xeon E7-4890v2 (2.8GHz/15-core/37.5MB/155W) FIO Processor Kit 728955-L21

HPE DL580 Gen8 Intel Xeon E7-4890v2 (2.8GHz/15-core/37.5MB/155W) Processor 728955-B21

Configuration Information - Factory Integrated Models

Kit	
HP DL580 Intel Xeon E7-4880v2 (2.5GHz/15-core/37.5MB/130W) FIO Processor Kit	728957-L21
HPE DL580 Gen8 Intel Xeon E7-4880v2 (2.5GHz/15-core/37.5MB/130W) Processor Kit	728957-B21
HP DL580 Gen8 Intel Xeon E7-4870v2 (2.3GHz/15-core/30MB/130W) FIO Processor Kit	728959-L21
HPE DL580 Gen8 Intel Xeon E7-4870v2 (2.3GHz/15-core/30MB/130W) Processor Kit	728959-B21
HP DL580 Gen8 Intel Xeon E7-8880Lv2 (2.2GHz/15-core/37.5MB/105W) FIO Processor Kit	728953-L21
HPE DL580 Gen8 Intel Xeon E7-8880Lv2 (2.2GHz/15-core/37.5MB/105W) Processor Kit	728953-B21
Twelve-Core Processors	
HP DL580 Gen8 Intel Xeon E7-4860v2 (2.6GHz/12-core/30MB/130W) FIO Processor Kit	728963-L21
HPE DL580 Gen8 Intel Xeon E7-4860v2 (2.6GHz/12-core/30MB/130W) Processor Kit	728963-B21
HP DL580 Gen8 Intel Xeon E7-4850v2 (2.3GHz/12-core/24MB/105W) FIO Processor Kit	728965-L21
HPE DL580 Gen8 Intel Xeon E7-4850v2 (2.3GHz/12-core/24MB/105W) Processor Kit	728965-B21
HP DL580 Gen8 Intel Xeon E7-8857v2 (3.0GHz/12-core/30MB/130W) FIO Processor Kit	728961-L21
HPE DL580 Gen8 Intel Xeon E7-8857v2 (3.0GHz/12-core/30MB/130W) Processor Kit	728961-B21
Ten-Core Processors	
HP DL580 Gen8 Xeon E7-8891v2 (3.2GHz/10-core/37.5MB/155W) FIO Processor Kit	728967-L21
HPE DL580 Gen8 Intel Xeon E7-8891v2 (3.2GHz/10-core/37.5MB/155W) Processor Kit	728967-B21
HP DL580 Gen8 Xeon E7-4830v2 (2.2GHz/10-core/20MB/105W) FIO Processor Kit	728969-L21
HPE DL580 Gen8 Intel Xeon E7-4830v2 (2.2GHz/10-core/20MB/105W) Processor Kit	728969-B21
Eight-Core Processors	
HP DL580 Gen8 Intel Xeon E7-4820v2 (2.0GHz/8-core/16MB/105W) FIO Processor Kit	728971-L21
HPE DL580 Gen8 Intel Xeon E7-4820v2 (2.0GHz/8-core/16MB/105W) Processor Kit	728971-B21

Configuration Information - Factory Integrated Models

	Six-Core Processors	
	HP DL580 Gen8 Intel Xeon E7-4809v2 (1.9GHz/6-core/12MB/105W) FIO Processor Kit	728975-L21
	HPE DL580 Gen8 Intel Xeon E7-4809v2 (1.9GHz/6-core/12MB/105W) Processor Kit	728975-B21
	HP DL580 Gen8 Intel Xeon E7-8893v2 (3.4GHz/6-core/37.5MB/155W) FIO Processor Kit	728973-L21
	HPE DL580 Gen8 Intel Xeon E7-8893v2 (3.4GHz/6-core/37.5MB/155W) Processor Kit	728973-B21
HPE Memory	**NOTE: HPE memory from previous generation servers are not qualified or warranted with this HPE ProLiant Server. HPE SmartMemory is required to realize the memory performance improvements and enhanced functionality listed in this document for Gen8. For additional information, please see the HPE SmartMemory QuickSpecs.** **NOTE: LRDIMM, RDIMM, UDIMM, and HDIMMs are all distinct memory technologies and cannot be mixed within a server. The majority of ProLiant Gen8 servers support LRDIMM, RDIMM and UDIMMs.**	
	Registered DIMMs (RDIMMs)	
	HPE 8GB (1x8GB) Single Rank x4 PC3-14900R (DDR3-1866) Registered CAS-13 Memory Kit	731761-B21
	HPE 8GB (1x8GB) Single Rank x4 PC3L-12800R (DDR3-1600) Registered CAS-11 Low Voltage Memory Kit	731765-B21
	HPE 16GB (1x16GB) Dual Rank x4 PC3-14900R (DDR3-1866) Registered CAS-13 Memory Kit	708641-B21
	HPE 16GB (1x16GB) Dual Rank x4 PC3L-12800R (DDR3-1600) Registered CAS-11 Low Voltage Memory Kit	713985-B21
	Load Reduced DIMMs (LRDIMMS)	
	HPE 32GB (1x32GB) Quad Rank x4 PC3-14900L (DDR3-1866) Load Reduced CAS-13 Memory Kit	708643-B21
	HP 64GB (1x64GB) Octa Rank x4 PC3-12800L (DDR3-1600) Load Reduced CAS-11 Memory Kit	700838-B21
	Memory Expansion Options	
	HP DL580 Gen8 12 DIMM Slots Memory Cartridge **NOTE: Up to Eight (8) memory cartridges are supported for 96 DIMM slots.** **NOTE: A minimum of two memory cartridges are required (one per processor).** **NOTE: A minimum of two memory DIMMs are required per cartridge (minimum of four DIMMs per server).**	732411-B21
FlexibleLOMs	**NOTE: Only one FlexibleLOM can be added to the server. These options are upgradeable and can be changed from the original configuration after the server is shipped.** **NOTE: For 10Gb adapters, a minimum of two Gigabytes (2 GB) of server memory**	

Configuration Information - Factory Integrated Models

	is required per each adapter. **NOTE: Wake-on-Lan feature is not supported on the DL580 Gen8 with FlexLOMs.**	
	HPE Ethernet 1Gb 4-port 331FLR FIO Adapter	684208-B21
	HPE Ethernet 1Gb 4-port 366FLR FIO Adapter	684217-B21
	HPE FlexFabric 10Gb 2-port 556FLR-SFP+ FIO Adapter	732456-B21
	NOTE: This adapter does not support FCOE Boot from SAN functionality on VMWare and FCOE functionality with RHEL 5.9	
	HPE Ethernet 10Gb 2-port 560FLR-SFP+ FIO Adapter	684218-B21
	HP Ethernet 10Gb 2-port 561FLR-T FIO Adapter	700700-B21
	HPE InfiniBand FDR/Ethernet 10Gb/40Gb 2-port 544+FLR-QSFP Adapter	764285-B21
HPE Power Supplies	**NOTE: Prior to making a power supply selection it is highly recommended that the HPE Power Advisor is run to determine the right size power supply for your server configuration. The HPE Power Advisor is located at: http://www.hp.com/go/hppoweradvisor.**	
	HPE Common Slot Platinum Plus Power Supply Kits	
	NOTE: 94% efficiency with support for HPE Power Discovery Services.	
	HPE 1500W Common Slot Platinum Plus Power Supply Kit	684532-B21
	HPE 1200W Common Slot Platinum Plus Hot Plug Power Supply Kit	656364-B21
	NOTE: Minimum of two (2) power supplies are required. **All power supplies in a server should match. Mixing Power Supplies is not supported.** **NOTE: Option Kits contain the specified power supply and a PDU IEC cable.** **NOTE: 1500W Power Supplies only support High Line Voltage.** **NOTE: HPE ProLiant servers ship with an IEC-IEC power cord used for rack mounting with Power Distribution Units (PDUs). For a full list of optional HPE power cords please go to http://www.hp.com/products/powercords**	
Storage Controller FBWC	HP Smart Array 2GB 24in FIO Flashback Write Cache	758836-B21
	HP 4GB Flash Backed Write Cache FIO Kit for P-series Smart Array Controllers	698537-B21
	NOTE: One Flash Backed Write Cache is required for P830i SAS Controller	
	NOTE: Max of 4 capacitor modules can be installed.	

Step 3: Choose Additional Factory Integratable Options (only one of the following from each list unless otherwise noted)

Converged Infrastructure Management Software	**HPE OneView with iLO Advanced - Server hardware required on same purchase order**	
	HPE OneView for ProLiant DL Server including 3yr 24x7 Support FIO Bundle Physical 1-server LTU	E5Y43A

Configuration Information - Factory Integrated Models

	HPE OneView without iLO Advanced - Server hardware required on same purchase order	
	HPE OneView w/o iLO including 3yr 24x7 Support 1-server FIO LTU	P8B31A
	NOTE: OneView is supported in Legacy BIOS mode only.	
HPE Insight Software	HPE Insight Control including 1yr 24x7 Support ProLiant ML/DL/BL-bundle Single Server FIO LTU	C6N36A
	HPE Insight Control including 1yr 24x7 Support ProLiant ML/DL/BL-bundle FIO E-LTU	C6N36ABE
Factory Settings	HP UEFI FIO Setting **NOTE: For factory configuration of the server in UEFI mode.**	758959-B21
	HP Lockstep Memory Mode FIO Setting **NOTE: A minimum of four DIMMs per cartridge is required and all installed cartridges must have identical DIMM configuration.**	773559-B21

Step 4: Choose Additional Options for Factory Integration from Core and Additional Options Sections below.

Core Options

NOTE: Some options may not be integrated at the factory. To ensure only valid configurations are ordered, Hewlett Packard Enterprise recommends the use of a Hewlett Packard Enterprise approved configurator. Contact your local sales representative for additional information.

HPE Processors	**Fifteen-Core Processors**	
	HPE DL580 Gen8 Intel Xeon E7-4890v2 (2.8GHz/15-core/37.5MB/155W) Processor Kit	728955-B21
	HPE DL580 Gen8 Intel Xeon E7-4880v2 (2.5GHz/15-core/37.5MB/130W) Processor Kit	728957-B21
	HPE DL580 Gen8 Intel Xeon E7-4870v2 (2.3GHz/15-core/30MB/130W) Processor Kit	728959-B21
	HPE DL580 Gen8 Intel Xeon E7-8880Lv2 (2.2GHz/15-core/37.5MB/105W) Processor Kit	728953-B21
	Twelve-Core Processors	
	HPE DL580 Gen8 Intel Xeon E7-4860v2 (2.6GHz/12-core/30MB/130W) Processor Kit	728963-B21
	HPE DL580 Gen8 Intel Xeon E7-4850v2 (2.3GHz/12-core/24MB/105W) Processor Kit	728965-B21
	HPE DL580 Gen8 Intel Xeon E7-8857v2 (3.0GHz/12-core/30MB/130W) Processor Kit	728961-B21
	Ten-Core Processors	
	HPE DL580 Gen8 Intel Xeon E7-8891v2 (3.2GHz/10-core/37.5MB/155W) Processor Kit	728967-B21
	HPE DL580 Gen8 Intel Xeon E7-4830v2 (2.2GHz/10-core/20MB/105W) Processor Kit	728969-B21
	Eight-Core Processors	
	HPE DL580 Gen8 Intel Xeon E7-4820v2 (2.0GHz/8-core/16MB/105W) Processor Kit	728971-B21
	Six-Core Processors	
	HPE DL580 Gen8 Intel Xeon E7-4809v2 (1.9GHz/6-core/12MB/105W) Processor Kit	728975-B21
	HPE DL580 Gen8 Intel Xeon E7-8893v2 (3.4GHz/6-core/37.5MB/155W) Processor Kit	728973-B21

HPE Memory

NOTE: HPE memory from previous generation servers are not qualified or warranted with this HPE ProLiant Server. HPE SmartMemory is required to realize the memory performance improvements and enhanced functionality listed in this document for Gen8. For additional information, please see the HPE SmartMemory QuickSpecs.

NOTE: LRDIMM, RDIMM, UDIMM, and HDIMMs are all distinct memory technologies and cannot be mixed within a server. The majority of ProLiant Gen8 servers support LRDIMM, RDIMM and UDIMMs.

Registered DIMMs (RDIMMs)

Core Options

	HPE 16GB (1x16GB) Dual Rank x4 PC3L-12800R (DDR3-1600) Registered CAS-11 Low Voltage Memory Kit	713985-B21
	HPE 8GB (1x8GB) Single Rank x4 PC3L-12800R (DDR3-1600) Registered CAS-11 Low Voltage Memory Kit	731765-B21
	HPE 8GB (1x8GB) Single Rank x4 PC3-14900R (DDR3-1866) Registered CAS-13 Memory Kit	731761-B21
	HPE 16GB (1x16GB) Dual Rank x4 PC3-14900R (DDR3-1866) Registered CAS-13 Memory Kit	708641-B21
	Load Reduced DIMMs (LRDIMMS)	
	HPE 32GB (1x32GB) Quad Rank x4 PC3-14900L (DDR3-1866) Load Reduced CAS-13 Memory Kit	708643-B21
	HP 64GB (1x64GB) Octa Rank x4 PC3-12800L (DDR3-1600) Load Reduced CAS-11 Memory Kit	700838-B21
	Memory Expansion Options	
	HP DL580 Gen8 12 DIMM Slots Memory Cartridge **NOTE: Up to Eight (8) memory cartridges are supported for 96 DIMM slots.** **NOTE: A minimum of two memory cartridges are required (one per processor).** **NOTE: A minimum of two memory DIMMs are required per cartridge (minimum of four DIMMs per server).**	732411-B21
HPE Optical Drives	HPE Mobile USB Non Leaded System DVD RW Drive	701498-B21
HPE Hard Drives	**NOTE: The components of a storage subsystem (e.g. the drive, the HBA/controller, firmware, and the server backplane) should operate at the same data transfer rate or the system bandwidth will be negotiated down to an acceptable level for all components.** **NOTE: Hard drives have either a one year or three year warranty; refer to the specific hard drive QuickSpecs for details.**	
	12G SAS Hot Plug with SmartDrive SFF (2.5-inch) Enterprise Drives	
	HPE 600GB SAS 12G Enterprise 15K SFF (2.5in) SC 3yr Wty HDD	759212-B21
	HPE 450GB SAS 12G Enterprise 15K SFF (2.5in) SC 3yr Wty HDD	759210-B21
	HPE 300GB SAS 12G Enterprise 15K SFF (2.5in) SC 3yr Wty HDD	759208-B21
	12G SAS Hot Plug with SmartDrive SFF (2.5-inch) Enterprise Drives	
	HPE 1.2TB SAS 12G Enterprise 10K SFF (2.5in) SC 3yr Wty HDD	781518-B21
	HPE 900GB SAS 12G Enterprise 10K SFF (2.5in) SC 3yr Wty HDD	785069-B21
	HPE 600GB SAS 12G Enterprise 10K SFF (2.5in) SC 3yr Wty HDD	781516-B21
	HPE 300GB SAS 12G Enterprise 10K SFF (2.5in) SC 3yr Wty HDD	785067-B21

Core Options

12G SAS Hot Plug SFF (2.5-inch) SC HDD	
HPE 1.8TB SAS 12G Enterprise 10K SFF (2.5in) SC 3yr Wty 512e HDD	791034-B21
12G SAS Hot Plug SFF (2.5-inch) SC SSD	
HPE 1.92TB SAS 12G Read Intensive SFF (2.5in) SC 3yr Wty SSD	802891-B21
HPE 800GB SAS 12G Write Intensive SFF (2.5in) SC 3yr Wty SSD	802586-B21
HPE 400GB SAS 12G Write Intensive SFF (2.5in) SC 3yr Wty SSD	802582-B21
HPE 200GB SAS 12G Write Intensive SFF (2.5in) SC 3yr Wty SSD	802578-B21
12G SAS SFF (2.5in) RI-3 SC Solid State Drives	
HPE 3.84TB SAS 12G Read Intensive SFF (2.5in) SC 3yr Wty SSD	816576-B21
HPE 1.92TB SAS 12G Read Intensive SFF (2.5in) SC 3yr Wty SSD	816572-B21
HPE 960GB SAS 12G Read Intensive SFF (2.5in) SC 3yr Wty SSD	816568-B21
HPE 480GB SAS 12G Read Intensive SFF (2.5in) SC 3yr Wty SSD	816562-B21
12G SAS SFF (2.5in) MU-3 SC Solid State Drives	
HPE 3.2TB SAS 12G Mixed Use SFF (2.5in) SC 3yr Wty SSD	822567-B21
HPE 1.6TB SAS 12G Mixed Use SFF (2.5in) SC 3yr Wty SSD	822563-B21
HPE 800GB SAS 12G Mixed Use SFF (2.5in) SC 3yr Wty SSD	822559-B21
HPE 400GB SAS 12G Mixed Use SFF (2.5in) SC 3yr Wty SSD	822555-B21
12G SAS Hot Plug SFF (2.5-inch) SC HDD	
HPE 2TB SAS 12G Midline 7.2K SFF (2.5in) SC 1yr Wty 512e HDD	765466-B21
HPE 1TB SAS 12G Midline 7.2K SFF (2.5in) SC 1yr Wty 512e Digitally Signed Firmware HDD	765464-B21
HPE 600GB SAS 12G Enterprise 15K SFF (2.5in) SC 3yr Wty 512e HDD	748387-B21
6G SAS Hot Plug with SmartDrive SFF (2.5-inch) Enterprise Drives	
HP 1.2TB 6G SAS 10K rpm SFF (2.5-inch) SC Dual Port Enterprise 3yr Warranty Hard Drive	718162-B21
HP 900GB 6G SAS 10K rpm SFF (2.5-inch) SC Enterprise 3yr Warranty Hard Drive	652589-B21
HP 600GB 6G SAS 10K rpm SFF (2.5-inch) SC Enterprise 3yr Warranty Hard Drive	652583-B21
HP 450GB 6G SAS 10K rpm SFF (2.5-inch) SC Enterprise 3yr Warranty Hard Drive	652572-B21
HP 300GB 6G SAS 10K rpm SFF (2.5-inch) SC Enterprise 3yr Warranty Hard Drive	652564-B21
HP 300GB 6G SAS 15K rpm SFF (2.5-inch) SC Enterprise 3yr Warranty Hard Drive	652611-B21
HP 146GB 6G SAS 15K rpm SFF (2.5-inch) SC Enterprise 3yr Warranty Hard Drive	652605-B21

Core Options

6G SAS Hot Plug SmartDrive SFF (2.5-inch) Midline Drives

HPE 1TB 6G SAS 7.2K rpm SFF (2.5-inch) SC Midline 1yr Warranty Hard Drive	652749-B21
HPE 500GB 6G SAS 7.2K rpm SFF (2.5-inch) SC Midline 1yr Warranty Hard Drive	652745-B21

NOTE: Please see the QuickSpecs for Technical Specifications and additional information:
https://www.hpe.com/h20195/v2/GetHTML.aspx?docname=c04111744

6G SAS ME Hot Plug SFF (2.5-inch) Enterprise Mainstream H2 Solid State Drives

HPE 200GB SAS 12G Write Intensive SFF (2.5in) SC 3yr Wty SSD	779164-B21
HPE 400GB SAS 12G Write Intensive SFF (2.5in) SC 3yr Wty SSD	779168-B21
HPE 800GB SAS 12G Write Intensive SFF (2.5in) SC 3yr Wty SSD	779172-B21
HPE 1.6TB SAS 12G Write Intensive SFF (2.5in) SC 3yr Wty SSD	779176-B21

12G SAS SFF (2.5-in) MDL SC HDD

HPE 1TB SAS 12G Midline 7.2K SFF (2.5in) SC 1yr Wty Digitally Signed Firmware HDD	832514-B21

6G SATA 2.5in WI-PLP SC Solid State Drives

HPE 1.2TB SATA 6G Write Intensive SFF (2.5in) SC 3yr Wty SSD	804677-B21
HPE 800GB SATA 6G Write Intensive SFF (2.5in) SC 3yr Wty SSD	804671-B21
HPE 400GB SATA 6G Write Intensive SFF (2.5in) SC 3yr Wty SSD	804665-B21
HPE 200GB SATA 6G Write Intensive SFF (2.5in) SC 3yr Wty SSD	804639-B21

6G SATA 2.5in MU-PLP SC Solid State Drives

HPE 1.6TB SATA 6G Mixed Use SFF (2.5in) SC 3yr Wty SSD	804631-B21
HPE 800GB SATA 6G Mixed Use SFF (2.5in) SC 3yr Wty SSD	804625-B21
HPE 480GB SATA 6G Mixed Use SFF (2.5in) SC 3yr Wty SSD	832414-B21
HPE 200GB SATA 6G Mixed Use SFF (2.5in) SC 3yr Wty SSD	804613-B21

6G SATA 2.5in RI-PLP SC Solid State Drives

HPE 1.6TB SATA 6G Read Intensive SFF (2.5in) SC 3yr Wty SSD	804605-B21
HPE 800GB SATA 6G Read Intensive SFF (2.5in) SC 3yr Wty SSD	804599-B21
HPE 480GB SATA 6G Read Intensive SFF (2.5in) SC 3yr Wty SSD	804593-B21
HPE 240GB SATA 6G Read Intensive SFF (2.5in) SC 3yr Wty SSD	804587-B21

Core Options

HPE 120GB SATA 6G Read Intensive SFF (2.5in) SC 3yr Wty SSD	804581-B21
HPE 80GB SATA 6G Read Intensive SFF (2.5in) SC 3yr Wty SSD	804575-B21
6G SATA Hot Plug SFF (2.5-inch) SC HDD	
HPE 2TB SATA 6G Midline 7.2K SFF (2.5in) SC 1yr Wty 512e Digitally Signed Firmware HDD	765455-B21
HPE 1TB SATA 6G Midline 7.2K SFF (2.5in) SC 1yr Wty 512e Digitally Signed Firmware HDD	765453-B21
6G SATA Hot Plug SFF (2.5-inch) RI SC Solid State Drives	
HP 480GB 6G SATA Read Intensive SFF 2.5-in SC 3yr Wty Solid State Drive	789145-B21
6G SATA Value Endurance Hot Plug SFF (2.5-inch) Enterprise Value Solid State Drives	
HP 600GB 6G SATA Value Endurance SFF 2.5-in SC Enterprise Value 3yr Wty Solid State Drive	739898-B21
6G SATA Hot Plug SFF (2.5-inch) SC Midline HDD	
HPE 1TB SATA 6G Midline 7.2K SFF (2.5in) SC 1yr Wty Digitally Signed Firmware HDD	655710-B21
HPE 500GB 6G SATA 7.2K rpm SFF (2.5-inch) SC Midline 1yr Warranty Hard Drive	655708-B21
6G SATA Value Endurance Hot Plug SFF (2.5-inch) SC Enterprise Value M1 SSD	
HPE 120GB SATA 6G Read Intensive SFF (2.5in) SC 3yr Wty SSD	764923-B21
HPE 240GB SATA 6G Read Intensive SFF (2.5in) SC 3yr Wty SSD	764925-B21
HPE 480GB SATA 6G Read Intensive SFF (2.5in) SC 3yr Wty SSD	764927-B21
HPE 800GB SATA 6G Read Intensive SFF (2.5in) SC 3yr Wty SSD	764929-B21
6G SATA Value Endurance Hot Plug SFF (2.5-inch) SC Enterprise Value G1 SSD	
HP 480GB 6G SATA Value Endurance SFF 2.5-in SC Enterprise Value 3yr Wty G1 Solid State Drive	756657-B21
6G SATA Hot Plug RI-3 SFF (2.5-inch) SC Solid State Drives	
HPE 3.84TB SATA 6G Read Intensive SFF (2.5in) SC 3yr Wty SSD	816929-B21
HPE 1.92TB SATA 6G Read Intensive SFF (2.5in) SC 3yr Wty SSD	816919-B21
HPE 960GB SATA 6G Read Intensive SFF (2.5in) SC 3yr Wty SSD	816909-B21
HPE 480GB SATA 6G Read Intensive SFF (2.5in) SC 3yr Wty SSD	816899-B21
HPE 240GB SATA 6G Read Intensive SFF (2.5in) SC 3yr Wty SSD	816889-B21
HPE 120GB SATA 6G Read Intensive SFF (2.5in) SC 3yr Wty SSD	816879-B21

Core Options

6G SATA Hot Plug MU-3 SFF (2.5-inch) SC Solid State Drives

HPE 1.92TB SATA 6G Mixed Use SFF (2.5in) SC 3yr Wty SSD	817011-B21
HPE 960GB SATA 6G Mixed Use SFF (2.5in) SC 3yr Wty SSD	816995-B21
HPE 480GB SATA 6G Mixed Use SFF (2.5in) SC 3yr Wty SSD	816985-B21
HPE 240GB SATA 6G Mixed Use SFF (2.5in) SC 3yr Wty SSD	816975-B21
HPE 120GB SATA 6G Mixed Use SFF (2.5in) SC 3yr Wty SSD	816965-B21

12G SAS Enterprise Performance, Mainstream and Value Solid State Drives

HP 1.6TB 12G SAS Value Endurance SFF 2.5-in SC Enterprise Value 3yr Wty Solid State Drive	762263-B21
HPE 800GB SAS 12G Read Intensive SFF (2.5in) SC 3yr Wty SSD	762261-B21
HP ProLiant DL580 5 Small Form Factor Drive Backplane Cage Kit	739405-B21
HPE Small Form Factor Hard Drive Blank Kit	666987-B21
HP DL580 PCIe Stand-up SAS Controller Upper Drive Backplane Cable Kit	748916-B21

NOTE: This cable is required when ordering one of the following Smart Array Controllers for installation in a PCIe slot.

HPE Smart Array P830/4GB FBWC 12Gb 2-ports Int PCIe x8 SAS Controller	698533-B21
HPE Smart Array P430/4GB FBWC 12Gb 1-port Int SAS Controller	698530-B21
HPE Smart Array P430/2GB FBWC 12Gb 1-port Int SAS Controller	698529-B21

HPE Networking

10 Gigabit Ethernet Adapters

NOTE: A minimum of two Gigabytes (2 GB) of server memory is required per each adapter.

HPE Ethernet 10Gb 2-port 561T Adapter	716591-B21

FlexibleLOM Adapters

HP Ethernet 1Gb 4-port 331FLR Adapter	629135-B21
HPE Ethernet 1Gb 4-port 366FLR Adapter	665240-B21
HPE Ethernet 10Gb 2-port 546SFP+ Adapter	779793-B21
HPE Ethernet 10Gb 2-port 546FLR-SFP+ Adapter	779799-B21
HPE Ethernet 10Gb 2-port 557SFP+ Adapter	788995-B21

NOTE: This adapter does not support FCOE Boot from SAN functionality on VMWare and FCOE functionality with RHEL 5.9.

HPE Ethernet 10Gb 2-port 560FLR-SFP+ Adapter	665243-B21
HPE InfiniBand FDR/Ethernet 10Gb/40Gb 2-port 544+FLR-QSFP Adapter	764285-B21

Core Options

	NOTE: Wake-On-LAN not supported with FlexLOMs on DL580 Gen8	
	NOTE: Please see the QuickSpecs for Technical Specifications and additional information: http://www.hp.com/go/ProLiantNICs	
HPE Power Supplies	**NOTE: Prior to making a power supply selection it is highly recommended that the HPE Power Advisor is run to determine the right size power supply for your server configuration. The HPE Power Advisor is located at: http://www.hp.com/go/hppoweradvisor.**	
	HPE Common Slot Platinum Plus Power Supply Kits	
	NOTE: 94% efficiency with support for HPE Power Discovery Services.	
	HPE 1500W Common Slot Platinum Plus Power Supply Kit	684532-B21
	HPE 1200W Common Slot Platinum Plus Hot Plug Power Supply Kit	656364-B21
	NOTE: All power supplies in a server should match. Mixing Power Supplies is not supported.	
	NOTE: Option Kits contain specified power supply and PDU IEC cable.	
	NOTE: 1500W Power Supplies only support High Line Voltage.	
	NOTE: HPE ProLiant servers ship with an IEC-IEC power cord used for rack mounting with Power Distribution Units (PDUs). For a full list of optional HPE power cords please go to http://www.hp.com/products/powercords	
HPE Graphic Options	**NOTE: Up to five cards are supported on the DL580 Gen8. Supporting multiple number of cards on the DL580 Gen8 blocks some active IO cards as follows due to space constraints:** **For 2P config: Max of 2 double-wide cards are supported on slot 6 and slot 9 (slot 8 is blocked)** **For 3P config: Max of 3 double-wide cards are supported on slot 3, slot 6 and slot 9 (slot 5 and slot 8 are blocked)** **For 4P config: Max of 5 double wide cards are supported on Slot 1, Slot 3, Slot 2, Slot 6 and Slot 9 (slot 5 and slot 8 are blocked).** **NOTE: HPE DL580/DL585/DL980 Power Cable Kit (631660-B21) is required for Graphics cards. Each cable kit has two 8-pin connectors (one 150W and other 225W) and can support up to two cards. For three cards, two cable kits are required. For five cards, three cable kits are required. The cards pull up to 75W of power from the IO slot and the rest from the auxiliary power connectors.**	
	NOTE: Both UEFI mode and Legacy Mode are supported.	
	NVIDIA Quadro K6000 PCI-E Graphics Adapter	730874-B21
	NOTE: Supported at Gen2 speeds	
	NVIDIA Tesla K40C 12GB Computational Accelerator	753960-B21
	NOTE: Supported at Gen2 speeds	
	NVIDIA GRID K2 Reverse Air Flow Dual GPU PCIe Graphics Accelerator	753958-B21
	NOTE: Only three cards are supported with MS Windows Server 2012 R2	
Auxiliary Power Cables	**NOTE: The DL580 Gen8 supports six auxiliary power connectors**	
	HPE DL580/DL585/DL980 Power Cable Kit NOTE:NOTE: Order with GPGPUs for providing additional power to the IO cards.	631660-B21

Core Options

Additional Options

NOTE: Some options may not be integrated at the factory. To ensure only valid configurations are ordered, Hewlett Packard Enterprise recommends the use of a Hewlett Packard Enterprise approved configurator. Contact your local sales representative for additional information.

HPE Insight Software	**HPE Insight Control**	
	HPE Insight Control including 1yr 24x7 Technical Support and Updates 1-server LTU	C6N27A
	HPE Insight Management Media Kit	C6N31A
	HPE Insight Control including 1yr 24x7 TSU E-LTU	C6N28ABE
	NOTE: Electronic and Flexible-Quantity licenses can be used to purchase multiple licenses with a single activation key. **NOTE: Customer will receive a license entitlement certificate. The license entitlement certificate must be redeemed online or via fax in order to obtain the license activation key(s). Includes one year of 24 x 7 HPE Software Technical Support and Update Service.** **NOTE: Licenses ship without media. The HPE Insight Control Media Kit can be ordered separately, or can be downloaded at: http://www.hp.com/go/insightupdates.** **NOTE: For additional license options please see the QuickSpecs at: https://www.hpe.com/h20195/v2/GetHTML.aspx?docname=c04123391**	
	HPE Integrated Lights-Out (iLO) Advanced for ProLiant	
	HPE iLO Advanced including 1yr 24x7 Technical Support and Updates E-LTU	E6U59ABE
	HPE iLO Advanced including 3yr 24x7 Technical Support and Updates E-LTU	E6U64ABE
	HPE iLO Advanced including 1yr 24x7 Technical Support and Updates 1-server LTU	512485-B21
	HPE iLO Advanced including 3yr 24x7 Tech Support and Updates 1-server LTU	BD505A
	NOTE: For additional license options please see the QuickSpecs at: https://www.hpe.com/h20195/v2/GetHTML.aspx?docname=c04154343 **NOTE: For more information, visit: http://www.hp.com/go/ilo**	
Converged Infrastructure Management Software	**HPE OneView**	
	HPE OneView with iLO Advanced HPE OneView Physical Media Kit LTU	E5Y37A
	HPE OneView including 3yr 24x7 Support Physical 1-server LTU	E5Y34A
	HPE OneView including 3yr 24x7 Support Flexible Quantity E-LTU	E5Y35AAE
	HPE Operations Analytics for HPE OneView LTU	K8G29A
	HPE Operations Analytics for HPE OneView E-LTU	K8G29AAE

Additional Options

	HPE OneView without iLO Advanced	
	HPE OneView w/o iLO including 3yr 24x7 Support 1-server LTU	P8B24A
	HPE OneView w/o iLO including 3yr 24x7 Support Flexible Quantity E-LTU	P8B26AAE
	NOTE: OneView is supported in Legacy BIOS mode only. **NOTE: Please see the QuickSpecs for Technical Specifications and additional information:** **https://www.hpe.com/h20195/v2/GetHTML.aspx?docname=c04111367**	
HPE I/O Accelerator Options	**Second Generation Accelerators**	
	HP 1.3TB HH/HL Value Endurance (VE) PCIe Workload Accelerator	763834-B21
	HP 1.6TB HH/HL Value Endurance (VE) PCIe Workload Accelerator	763836-B21
	HP 3.2TB HH/HL Value Endurance (VE) PCIe Workload Accelerator	763838-B21
	HP 6.4TB FH/HL Value Endurance (VE) PCIe Workload Accelerator	763840-B21
	HPE 1.0TB HH/HL Light Endurance (LE) PCIe Workload Accelerator	775666-B21
	HPE 1.3TB HH/HL Light Endurance (LE) PCIe Workload Accelerator	775668-B21
	HPE 2.6TB HH/HL Light Endurance (LE) PCIe Workload Accelerator	775670-B21
	HPE 5.2TB FH/HL Light Endurance (LE) PCIe Workload Accelerator	775672-B21
	HPE 1.3TB Read Intensive-2 HH/HL PCIe Workload Accelerator	831733-B21
	HPE 1.6TB Read Intensive-2 HH/HL PCIe Workload Accelerator	831735-B21
	HPE 3.2TB Read Intensive-2 HH/HL PCIe Workload Accelerator	831737-B21
	HPE 6.4TB Read Intensive-2 FH/HL PCIe Workload Accelerator	831739-B21
	HP 1205GB Multi Level Cell G2 PCIe ioDrive2 for ProLiant Servers	673646-B21
	NOTE: Both Legacy and UEFI BIOS modes are supported. **NOTE: Please see the QuickSpecs for Technical Specifications and additional information:** **https://www.hpe.com/h20195/v2/GetHTML.aspx?docname=c04111683**	
HPE Storage Controllers	**SAS Controllers**	
	Smart Array P430 Controller	
	HPE Smart Array P430/2GB FBWC 12Gb 1-port Int SAS Controller	698529-B21
	HPE Smart Array P430/4GB FBWC 12Gb 1-port Int SAS Controller	698530-B21
	Smart Array P431 Controller	
	HPE Smart Array P431/2GB FBWC 12Gb 2-ports Ext SAS Controller	698531-B21
	HPE Smart Array P431/4GB FBWC 12Gb 2-ports Ext SAS Controller	698532-B21
	Smart Array P830 Controller	
	HPE Smart Array P830/4GB FBWC 12Gb 2-ports Int PCIe x8 SAS Controller	698533-B21

Additional Options

	Optional Upgrades	
	HP Secure Encryption per Svr Entitlement	C9A82AAE
	HPE Smart Array SR SmartCache (Single Key/Single Server) LTU	D7S26A
	HPE Smart Array SR SmartCache (Single Key/Multiple Servers) LTU	D7S27A
	HPE Smart Array SR SmartCache (Single Key/Multiple Servers) E-LTU	D7S27AAE
	NOTE: A maximum of four HPE Smart Array Controllers (including embedded controller) can be installed **NOTE: For more information about HPE SmartCache, go to http://www.hp.com/go/smartcache** **NOTE: Both Legacy and UEFI modes are supported** **NOTE: Please see the QuickSpecs for Technical Specifications and additional information:** **https://www.hpe.com/h20195/v2/GetHTML.aspx?docname=c04111382 (Smart Array P430 Controller)** **https://www.hpe.com/h20195/v2/GetHTML.aspx?docname=c04111365 (Smart Array P431 Controller)** **https://www.hpe.com/h20195/v2/gethtml.aspx?docname=c04227582 (Smart Array P830 Controller)** **https://www.hpe.com/h20195/v2/GetHTML.aspx?docname=c04123148 (SmartCache)**	
HPE Tape Backup	**NOTE: For the complete range of tape drives, autoloaders, libraries and media see: http://www.hp.com/go/tape. For hardware and software compatibility of HPE tape backup products see: http://www.hp.com/storage/SPOCK and http://www.hp.com/go/ebs.** **NOTE: For Internal drives to be connected to DL servers please make sure that you order rack mount kit as well.**	
	HPE StoreEver LTO-6 Ultrium 6250 Tape Drive in a 1U Rack Mount Kit	C0L99A
	HPE StoreEver LTO-6 Ultrium 6650 SAS Internal Tape Drive	EH963A
	HPE StoreEver LTO-6 Ultrium 6650 SAS External Tape Drive	EH964A
	HPE StoreEver LTO-6 Ultrium 6250 Internal Tape Drive	EH969A
	HPE StoreEver LTO-6 Ultrium 6250 External Tape Drive	EH970A
	HPE StoreEver 1/8 G2 LTO-6 Ultrium 6250 Fibre Channel Tape Autoloader	C0H19A
HPE Tape Storage Systems	**HPE StoreEver MSL6480**	
	HPE StoreEver MSL6480 Scalable Base Module	QU625A
	NOTE: Please see the QuickSpecs for Technical Specifications and additional information: **https://www.hpe.com/h20195/v2/GetHTML.aspx?docname=c04111416**	
HPE Disk Backup	**NOTE: For the complete range of RDX drives and media see:**	

Additional Options

	http://www.hp.com/go/rdx. For hardware and software compatibility of HPE disk backup products see: http://www.hp.com/storage/SPOCK.	
	NOTE: For Internal drives to be connected to DL servers please make sure that you order rack mount kit as well.	
	HP RDX+ 500GB External Backup System	B7B66B
	HP RDX+ 1TB External Backup System	B7B69B
	HPE RDX 2TB USB3.0 External Disk Backup System	E7X53B
	HPE RDX500 USB3.0 Internal Disk Backup System	B7B64A
	HPE RDX1000 USB3.0 Internal Disk Backup System	B7B67A
	HPE RDX 2TB USB3.0 Internal Disk Backup System	E7X52A
	HPE RDX+ External Docking System	C8S07B
	NOTE: Please see the QuickSpecs for additional part numbers, Technical Specifications, and additional information: https://www.hpe.com/h20195/v2/GetHTML.aspx?docname=c04111633	
HPE Disk Storage Systems	**Disk Enclosures**	
	HP D2600 w/12 4TB 6G SAS 7.2K LFF Dual Port MDL HDD 48TB Bundle	E7W32A
	NOTE: Please see the QuickSpecs for Technical Specifications and additional information: https://www.hpe.com/h20195/v2/GetHTML.aspx?docname=c04111697	
HPE Converged Network Adapters	HPE StoreFabric CN1100R Dual Port Converged Network Adapter	QW990A
	NOTE: FCOE boot from SAN is not supported with VMWare.	
	HPE StoreFabric CN1200E 10Gb Converged Network Adapter	E7Y06A
	NOTE: Both UEFI and Legacy mode are supported.	
HPE Infiniband Options	HPE InfiniBand FDR/Ethernet 10Gb/40Gb 2-port 544+QSFP Adapter	764284-B21
	HPE InfiniBand QDR/Ethernet 10Gb 2-port 544+FLR-QSFP Adapter	764286-B21
	NOTE: UEFI and Legacy modes are supported with Ethernet and Infiniband functionality.	
	HPE InfiniBand FDR/Ethernet 10Gb/40Gb 2-port 544+FLR-QSFP Adapter	764285-B21
	NOTE: UEFI and Legacy modes are supported with Ethernet and Infiniband functionality.	
	HPE InfiniBand FDR 2-port 545QSFP Adapter	702211-B21
	NOTE: Legacy and UEFI modes are supported	
HPE Storage Options	**Storage Fibre Channel HBA**	

Additional Options

NOTE: The following is a list of all Fibre Channel Host Bus Adapters for Windows and Linux. For detailed compatibility information please see: http://h18006.www1.hp.com/storage/saninfrastructure/hba.html

QLogic Fibre Channel HBAs

HPE 81Q 8Gb 1-port PCIe Fibre Channel Host Bus Adapter	AK344A
HPE 82Q 8Gb 2-port PCIe Fibre Channel Host Bus Adapter	AJ764A
HPE StoreFabric SN1000Q 16GB 1-port PCIe Fibre Channel Host Bus Adapter	QW971A
HPE StoreFabric SN1000Q 16GB 2-port PCIe Fibre Channel Host Bus Adapter	QW972A

Emulex Fibre Channel HBAs

HPE 81E 8Gb 1-port PCIe Fibre Channel Host Bus Adapter	AJ762B
HPE 82E 8Gb 2-port PCIe Fibre Channel Host Bus Adapter	AJ763B
HPE StoreFabric SN1100E 16Gb Single Port Fibre Channel Host Bus Adapter	C8R38A
HPE StoreFabric SN1100E 16Gb Dual Port Fibre Channel Host Bus Adapter	C8R39A

NOTE: Both Legacy and UEFI mode is supported.

HPE Uninterruptible Power Systems

HPE Rack-mountable UPS

HPE R1500 Uninterruptible Power Supply (UPS)

HPE R1500 G4 NA Uninterruptible Power System	J2Q99A

NOTE: Please see the QuickSpecs for additional information: http://www8.hp.com/h20195/v2/GetHTML.aspx?docname=c0428336

HPE R/T2000 Uninterruptible Power System (UPS)

HPE R/T2200 G4 NA/JP Uninterruptible Power System	J2R00A
HPE R/T2200 G4 Extended Runtime Module	J2R09A
HPE 2U Rack/Tower UPS Shipping Kit	L4Q11A

HPE R/T3000 Uninterruptible Power System (UPS)

HPE R/T3000 G4 Low Voltage NA/JP Uninterruptible Power System	J2R01A
HPE R/T3000 G4 High Voltage NA/JP Uninterruptible Power System	J2R02A
HPE R/T3000 G4 Extended Runtime Module	J2R10A

NOTE: Please see the QuickSpecs for additional information: https://www.hpe.com/h20195/v2/GetHTML.aspx?docname=c04155328

R5000 Uninterruptible Power System (UPS)

HPE R5000 3U L630 High Voltage NA/JP Uninterruptible Power System	AF460A

Additional Options

	NOTE: Please see the QuickSpecs for additional information: https://www.hpe.com/h20195/v2/GetHTML.aspx?docname=c04155299	
	R7000 Uninterruptible Power System (UPS)	
	HPE R7000 4U 50A High Voltage NA/JP Uninterruptible Power System	AF462A
	HPE R5KVA and R7KVA 3U Extended Runtime Module	AF464A
	NOTE: Please see the QuickSpecs for additional information: https://www.hpe.com/h20195/v2/GetHTML.aspx?docname=c04155297	
	HPE Rackmountable 3 Phase Uninterruptible Power Systems (UPS R8000/3 and R12000/3)	
	HPE R8000/3 8000kVA Three Phase NA 6U Rackmount Uninterruptible Power System	AF431A
	HPE R12000/3 12000VA Three Phase NA 6U Rackmount Uninterruptible Power System	AF429A
	NOTE: Please see the QuickSpecs for additional information: https://www.hpe.com/h20195/v2/GetHTML.aspx?docname=c04128337	
	NOTE: For additional information on HPE Uninterruptible Power Systems please go to: http://www.hp.com/servers/rackups.	
	NOTE: For additional information on sizing your server, please reference: http://www.upssizer.com.	
	NOTE: Please see the UPS and PDU cable matrix's on the HPE Power Protection and Management page. Under Power Cords, click on the "HPE Power Cord Matrix" link. That link will list cable descriptions, requirements, and specifications for UPS and PDU units. Please see the following link: http://www.hp.com/products/powercords.	
HPE Basic Power Distribution Units (PDU)	**HPE Basic Power Distribution Unit: 1U/0U Version**	
	HPE Basic 1.9kVA/L5-20P 16A/120V Outlets (12) 5-20R/Horizontal NA/JP PDU	H5M54A
	HPE Basic 3.6kVA/60320 C20 Detachable 16A/230V Outlets (12) C13/Horizontal WW PDU	H5M56A
	HPE Basic Power Distribution Unit: Half Height Version	
	HPE Basic 2.8kVA/L5-30P 24A/120V Outlets (18) 5-20R/Vertical NA/JP PDU	H5M55A
	HPE Basic 4.9kVA/60320 C20 Detachable 16A/230V Outlets (20) C13/Vertical WW PDU	H5M57A
	HPE Basic 4.9kVA/L6-30P 24A/208V Outlets (20) C13/Vertical NA/JP PDU	H5M58A
	HPE Basic 3Ph 8.6kVA/L15-30P 24A/208V Outlets (18) C13/Vertical NA/JP PDU	H5M61A
	HPE Basic Power Distribution Unit: Mid Height Version	
	HPE Basic 4.9kVA/L6-30P 24A/208V Outlets (24) C13 (6) C19/Vertical NA/JP PDU	H5M59A
	HPE Basic 8.3kVA/CS8265C 40A/208V Outlets (30) C13 (6) C19/Vertical NA PDU	H5M60A
	HPE Basic 9.2kVA/50A Terminal Block 40A/230V Outlets (30) C13 (6) C19/Vertical WW PDU	H5M75A
	HPE Basic 3Ph 5.7kVA/ L21-20P 16A/120-208V Outlets (24) C13 (3) 5-20R/Vertical NA/JP PDU	H5M63A
	HPE Basic 3Ph 8.6kVA/L21-30P 24A/120-208V Outlets (24) C13 (3) C19 (3) 5-	H5M64A

Additional Options

	20R/Vertical NA/JP PDU	
	HPE Basic 3Ph 8.6kVA/L15-30P 24A/208V Outlets (24) C13 (6) C19/Vertical NA/JP PDU	H5M62A
	HPE Basic Power Distribution Unit: Full Height Version	
	HPE Basic 3Ph 11kVA/60309 16A/240V Outlets (36) C13 (6) C19/Vertical NA PDU	H5M67A
	HPE Basic Power Distribution Unit: 480/277 Volt Version	
	HPE 800VA - 277V Input / 230V Output NA Rack Mount Transformer	H3X09A
	NOTE: Please see the QuickSpecs for additional information: https://www.hpe.com/h20195/v2/GetHTML.aspx?docname=c04111250	
	NOTE: Additional HPE Power Distribution Units are available. For a complete list of all HPE PDUs and additional information please visit: http://www.hp.com/go/rackandpower.	
HPE Metered Power Distribution Units (PDU)	**HPE Remote Monitored Power Distribution Unit: 1U Version**	
	HPE Metered 2.8kVA/L5-30P 24A/120V Outlets (12) 5-20R/Horizontal NA/JP PDU	D9N43A
	HPE Metered 3.6kVA/60320 C20 Detachable 16A/230V Outlets (12) C13/Horizontal WW PDU	D9N46A
	HPE Metered 4.9kVA/L6-30P 24A/208V Outlets (12) C13/Horizontal NA/JP PDU	D9N44A
	HPE Remote Monitored Power Distribution Unit: Half Height Version	
	HPE Metered 3.6kVA/60320 C20 Detachable 16A/230V Outlets (16) C13/Vertical WW PDU	D9N45A
	HPE Remote Monitored Power Distribution Unit: Mid Height Version	
	HPE Metered 4.9kVA/L6-30P 24A/208V Outlets (20) C13 (4) C19/Vertical NA/JP PDU	D9N47A
	HPE Metered 3Ph 8.6kVA/L15-30P 24A/208V Outlets (18) C13 (3) C19/Vertical NA/JP PDU	D9N51A
	HPE Metered 3Ph 5.7kVA/L21-20P 16A/120-208V Outlets (13) C13 (3)5-20R/Vertical NA/JP PDU	D9N52A
	HPE Metered 3Ph 8.6kVA/L21-30P 24A/120-208V Outlets (18) C13 (3) C19 (3) 5-20R/Vertical NA/JP PDU	D9N53A
	HPE Remote Monitored Power Distribution Unit: Full Height Version	
	HPE Metered 8.3kVA/CS8265C 40A/208V Outlets (30) C13 (3) C19/Vertical NA PDU	D9N49A
	HPE Metered 3Ph 14.4kVA/CS8365C 40A/208V Outlets (12) C13 (12) C19/Vertical NA/JP PDU	D9N58A
	HPE Metered 3Ph 16.6kVA/60309 32A-30A 5-wire 24A/230V Outlets (30) C13 (3) C19/Vertical NA/JP PDU	D9N61A
	HPE Metered 3Ph 17.3kVA/60309 60A 4-wire 48A/208V Outlets (24) C13 (3) C19/Vertical NA/JP PDU	D9N54A
	HPE Metered 3Ph 17.3kVA/60309 60A 4-wire 48A/208V Outlets (12) C13 (12) C19/Vertical NA/JP PDU	D9N59A
	HPE Metered 3Ph 16.6kVA/60309 32A-30A 5-wire 24A/230V Outlets (12) C13 (12) C19/Vertical NA/JP PDU	D9N62A
	HPE Metered 3Ph 19.9kVA/L22-30P 24A/277V Outlets (30) RF-203P-HP/Vertical NA PDU	D9N63A
	HPE Environmental Sensor for Remote Monitored PDUs	
	HP Environmental Sensor for Remote Monitored and Managed PDUs	E2D53A

Additional Options

NOTE: Please see the QuickSpecs for additional information:
https://www.hpe.com/h20195/v2/GetHTML.aspx?docname=c04229513

HPE Intelligent Power Distribution Unit (PDU)	**iPDU Core Units**	
	HPE Intelligent Modular 4.9kVA/L6-30P 24A/208V Outlets (6) C19/Horizontal NA/JP PDU	AF520A
	HPE Intelligent Modular 8.3kVA/CS8265C 40A/208V Outlets (6) C19/Horizontal NA/JP PDU	AF521A
	HPE Intelligent Modular 3Ph 8.6kVA/L15-30P 24A/208V Outlets (6) C19/Horizontal NA/JP PDU	AF522A
	HPE Intelligent Modular 3Ph 14.4kVA/CS8365C 40A/208V Outlets (6) C19/Horizontal NA/JP PDU	AF533A
	HPE Intelligent Modular 3Ph 17.3kVA/60309 60A 4-wire 48A/208V (6) C19/Horizontal NA/JP PDU	AF523A
	HPE Intelligent Modular 3Ph 11kVA/L22-20P 16A/240V Outlets (6) C19/Horizontal NA/JP PDU	AF900A
	HPE Intelligent Modular 3Ph 17.3kVA/60309 30A 5-wire 24A/240V (6) C19/Horizontal NA/JP PDU	AF901A
	HPE Intelligent Modular 3Ph 17.3kVA/IEC 60309 60A 4-wire 48A/208V (12) C19/Horizontal NA/JP PDU	AF535A
	HPE Intelligent Modular 3Ph 17.3kVA/IEC 60309 30A 5-wire 24A/240V (12) C19/Horizontal NA/JP PDU	AF537A
	iPDU Kits with Standard Extension Bars	
	HPE Intelligent Modular 4.9kVA/L6-30P 24A/208V Outlets (20) C13 (6) C19/Horizontal NA/JP PDU	AF531A
	HPE Intelligent Modular 3Ph 8.6kVA/L15-30P 24A/208V Outlets (20) C13 (6) C19/Horizontal NA/JP PDU	AF532A
	iPDU Extension Bars	
	HPE 5xC13 Intelligent PDU Extension Bar G2 Kit	AF547A
	HPE 5xC13 Outlets Power and UID LEDs Pair Standard Extension Bar	AF528A
	NOTE: Please see the QuickSpecs for Technical Specifications and additional information: **https://www.hpe.com/h20195/v2/GetHTML.aspx?docname=c04128194** **NOTE: Additional HPE Power Distribution Units are available. For a complete list of all HPE PDUs and additional information please visit:** **http://www.hp.com/go/rackandpower**	
HPE Rack Options	**HPE Location Discovery Services**	
	HPE 36U Location Discovery Kit	BW945A
	HPE 42U Location Discovery Kit	BW946A
	HPE 47U Location Discovery Kit	BW947A
	NOTE: Please see the QuickSpecs for Technical Specifications and additional information: **https://www.hpe.com/h20195/v2/gethtml.aspx?docname=c04123199**	

Additional Options

HPE USB Keyboard and Mouse

HPE USB US Keyboard/Mouse Kit	631341-B21

NOTE: Please see the QuickSpecs for Technical Specifications and additional information:
https://www.hpe.com/h20195/v2/GetHTML.aspx?docname=c04168349

HPE Server Console Switch G2 with Virtual Media & CAC

HP 0x2x16 KVM Server Console Switch G2 with Virtual Media CAC Software	AF618A
HP 0x2x32 KVM Server Console Switch G2 with Virtual Media CAC Software	AF619A

NOTE: Please see the QuickSpecs for Technical Specifications and additional information:
https://www.hpe.com/h20195/v2/GetHTML.aspx?docname=c04168373

HPE IP Console Switch G2 with Virtual Media & CAC

HP 1x4 USB/PS2 KVM Console Switch	AF611A
HP 1x1Ex8 KVM IP Console Switch G2 with Virtual Media CAC Software	AF620A
HP 2x1Ex16 KVM IP Console Switch G2 with Virtual Media CAC Software	AF621A
HP 4x1Ex32 KVM IP Console Switch G2 with Virtual Media CAC Software	AF622A

NOTE: Please see the QuickSpecs for Technical Specifications and additional information:
https://www.hpe.com/h20195/v2/GetHTML.aspx?docname=c04230853

HPE USB and SD Options

HPE Flash Media Kits for USB Drives

NOTE: Hewlett Packard Enterprise qualified blank USB key for use with HPE ProLiant servers that support the VMware virtualization environment and other Hewlett Packard Enterprise value-add software. Hewlett Packard Enterprise recommends this industry standard USB flash device for use with VMware ESXi. USB device must be installed in the internal slot of the ProLiant server for use with VMware ESXi. Refer to HPE VMware Getting Started Guide for installation instructions.

HPE 8GB USB Enterprise Mainstream Flash Media Drive Key Kit	737953-B21

HPE Enterprise Mainstream Flash Media Kits for Memory Cards

HPE 8GB microSD Enterprise Mainstream Flash Media Kit	726116-B21
HPE 32GB microSD Mainstream Flash Media Kit	700139-B21

NOTE: Please see the QuickSpecs for Technical Specifications and additional information:
https://www.hpe.com/h20195/v2/GetHTML.aspx?docname=c04123175

HPE Pointnext operational services

Proactive Care

NOTE: Collaborative Support plus Proactive services delivered by the onshore, local language Advanced Solution Center (ASC), end-to-end case ownership from a Technical Solution Specialists and Technical Account Manager who remotely delivers firmware/software revision management, proactive scans and incident trend reports. Recommended for customers running a virtualized infrastructure and/or customers who desire an enhanced call support

Additional Options

experience.

HPE 3 year Proactive Care 24x7 ProLiant DL58x Service	U2Z68E
HPE 3 year Proactive Care 24x7 with DMR ProLiant DL58x Service	U2Z71E
HPE 3 year Proactive Care Call to Repair ProLiant DL58x Service	U2Z74E
HPE 3 year Proactive Care Call to Repair 24x7 with DMR ProLiant DL58x Service	U2Z77E

Installation Services

NOTE: Reduce the time required to get your system up and running and help minimize disruptions to your business.

HPE Install ProLiant DL58x Service	U4617E
HPE Installation and Startup ProLiant DL58x Service	U4618E
HPE Insight Control Startup Service	UF369E
HPE Systems Insight Manager (SIM) Startup Service	UA041E

NOTE: For more information, customer/resellers can contact: http://www.hp.com/services/carepack

Memory

HPE SmartMemory

New HPE SmartMemory now provides additional protection for your servers. With HPE Authentication it can verify that you have true HPE Qualified Memory in your HPE ProLiant Gen8 server. With HPE SmartMemory your new HPE ProLiant server can take advantage of additional Gen8 enhancements in performance, durability and future manageability support through HPE Active Health System.

For detailed memory configuration rules and guidelines, please use the Online DDR3 Memory Configuration Tool:
http://www.hp.com/go/ddr3memory-configurator

Memory Sub-system Architecture

As shown in the figure above, memory cartridge to processor association as follows:

- Memory cartridges installed without a corresponding processor are not utilized:
  - Processor 1 corresponds to memory cartridges 1 and 2.
  - Processor 2 corresponds to memory cartridges 3 and 4.
  - Processor 3 corresponds to memory cartridges 5 and 6.
    NOTE: Memory cartridges 5 and 6 are not recognized if processor 3 is not installed.
  - Processor 4 corresponds to memory cartridges 7 and 8.
    NOTE: Memory cartridges 7 and 8 are not recognized if processor 4 is not installed.

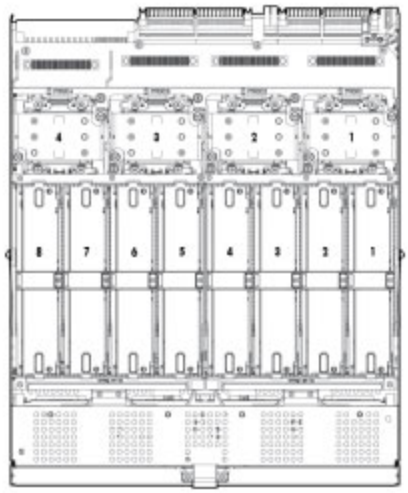

Each memory cartridge contains 12 DIMM slots as shown in figure below:

Memory

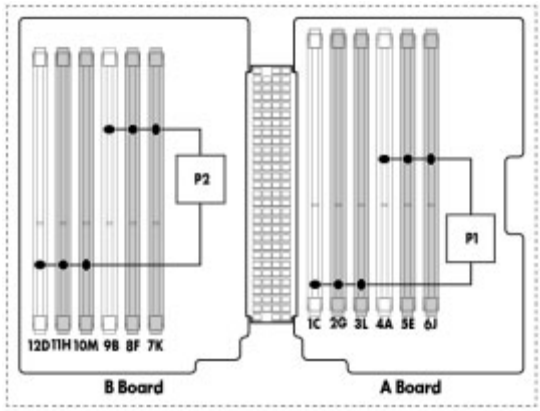

The memory subsystem in this server is divided into channels. Each processor supports eight channels, and each channel supports three DIMM slots, as shown in the table below. White DIMM slots denote the first slot of a channel (Ch 4A, Ch 9B, Ch 1C, Ch 12D…).

Channel	Population order	Slot number
1	A E J	4 5 6
2	B F K	9 8 7
3	C G L	1 2 3
4	D H M	12 11 10

The server can operate in independent channel mode (performance) or combined channel mode (lockstep). Lockstep mode improves the system reliability and availability. If running with RDIMM (built with x4 DRAM devices), the system can survive the complete failure of two DRAM devices (DDDC). Running in independent mode, the server can only survive the complete failure of a single DRAM device (SDDC).

Memory performance depends on selected processor and whether the system is configured for independent channel mode (performance mode) or lockstep mode (RAS mode).

Max memory speed	Processors
1600MHz	E7-8893 V2, E7-8891 v2, E7-8880L v2, E7-8857 v2, E7-4890 v2, E7-4880 v2, E7-4870 v2, E7-4860 v2
1333MHz	E7-4850 v2, E7-4830 v2, E7-4820 v2
1066MHz	E7-4809 v2

Independent channel mode (Performance mode):
In this mode each DDR3 channel works independently and the SMI2 channel operates at twice the DDR3 speed (2667 MT/s max). The server supports the following DIMM speeds as shown below in the table.

DIMM type	DIMM rank	Voltage	1 DIMM per channel	2 DIMMs per channel	3 DIMMs per channel
RDIMM	Single-rank (4 GB)	LV	1333	1066	1066
RDIMM	Single-rank (4 GB)	STD	1333	1333	1333
RDIMM	Single-rank (8 GB)	LV	1333	1066	1066

Memory

RDIMM	Single rank (8 GB)	STD	1333	1333	1333
RDIMM	Dual-rank (16 GB)	LV	1333	1066	1066
RDIMM	Dual-rank (16 GB)	STD	1333	1333	1333
LRDIMM	Quad-rank (32GB)	STD	1333	1333	1333
LRDIMM	Octal-rank (64GB)	STD	1066	1066	1066

Lockstep mode:
In this mode, the memory controller operates two DDR3 channels behind one memory buffer as single channel and the SMI2 channel operates at the DDR3 transfer rate (1600 MT/s max).
The server supports the following DIMM speeds as shown below in the table.

DIMM type	DIMM rank	Voltage	1 DIMM per channel	2 DIMMs per channel	3 DIMMs per channel
RDIMM	Single-rank (4 GB)	LV	1333	1066	1066
RDIMM	Single-rank (4 GB)	STD	1600	1600	1333
RDIMM	Single-rank (8 GB)	LV	1333	1066	1066
RDIMM	Single rank (8 GB)	STD	1600	1600	1333
RDIMM	Dual-rank (16 GB)	LV	1333	1066	1066
RDIMM	Dual-rank (16 GB)	STD	1600	1600	1333
LRDIMM	Quad-rank (32GB)	STD	1600	1600	1333
LRDIMM	Octal-rank (64GB)	STD	1066	1066	1066

DIMM Classification and Identification

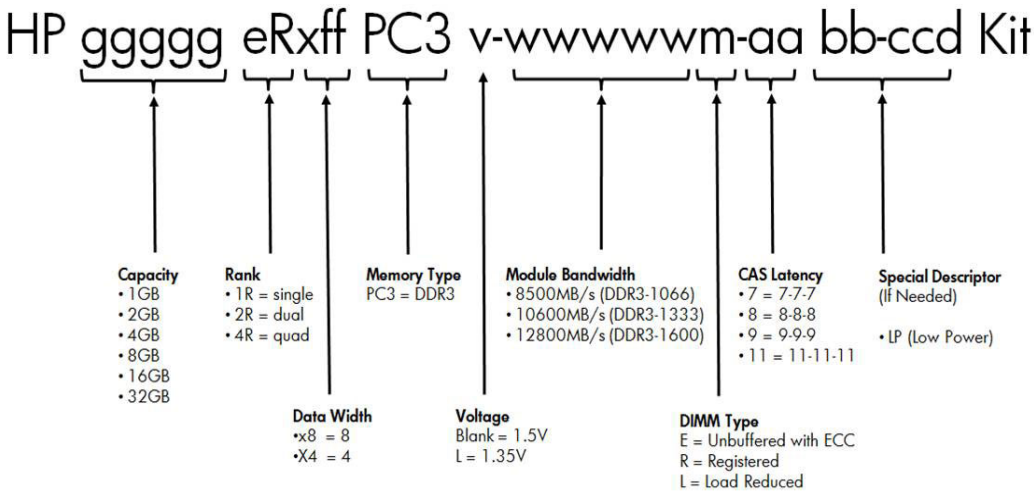

Memory Population Guidelines

- To maximize performance, install two memory cartridges per processor and balance the total memory capacity between all installed processors.
- When multiple processors are installed, Hewlett Packard Enterprise recommends installing the DIMMs in sequential alphabetical order: 4A, 9B, 1C, 12D, and so on.
- LRDIMMs support higher densities than single- and dual-rank RDIMMs, and higher speeds than quad-rank RDIMMs. This support enables you to install more high capacity DIMMs, resulting in higher system capacities and higher bandwidth.
- Do not mix LRDIMMs with any other DIMM type (RDIMM, LVDIMM).
- RDIMM population is limited to a maximum of eight logical ranks per channel. Therefore, only two quad rank RDIMMs are supported per channel. If there are more than eight physical ranks per channel, LRDIMMs rank multiplication provides support for three DIMMs per channel.
- Lockstep mode requires specific population requirements. See lock-step configuration below for more information.

NOTE: UDIMMs are not supported. This server does not support mixing LRDIMMs, RDIMMs, or UDIMMs. Attempting to mix any combination of these DIMMs can cause the server to halt during BIOS initialization.

Memory

For detailed memory configuration rules and guidelines, use the Online DDR3 Memory Configuration Tool on the HPE website (http://www.hp.com/go/ddr3memory-configurator).

Online Sparing Configuration Guidelines

Online spare memory provides protection against degraded DIMMs by reducing the likelihood of uncorrected memory errors. This protection is available without any operating system support.

Online spare memory protection dedicates one rank of each memory channel for use as spare memory. The remaining ranks are available for OS and application use. If correctable memory errors occur at a rate higher than a specific threshold on any of the non-spare ranks, the server automatically copies the memory contents of the degraded rank to the online spare rank. The server then deactivates the failing rank and automatically switches over to the online spare rank.

For Online Spare memory mode configurations, observe the following guidelines:

- Observe the general DIMM slot population guidelines.
- Each channel must have a valid online spare configuration.
- Each channel can have a different valid online spare configuration.
- Each populated channel must have a spare rank.
- A single dual-rank DIMM is not a valid configuration.
- LRDIMMs are treated as dual-rank DIMMs.

HPE Memory

NOTE: HPE memory from previous generation servers are not qualified or warranted with this HPE ProLiant Server. HPE SmartMemory is required to realize the memory performance improvements and enhanced functionality listed in this document for Gen8. For additional information, please see the HPE SmartMemory QuickSpecs at:
https://www.hpe.com/h20195/v2/GetHTML.aspx?docname=c04111535
NOTE: LRDIMM, RDIMM, UDIMM, and HDIMMs are all distinct memory technologies and cannot be mixed within a server. The majority of ProLiant Gen8 servers support LRDIMM, RDIMM and UDIMMs.

Registered DIMMs (RDIMMs)

HPE 16GB (1x16GB) Dual Rank x4 PC3L-12800R (DDR3-1600) Registered CAS-11 Low Voltage Memory Kit	713985-B21
HPE 8GB (1x8GB) Single Rank x4 PC3L-12800R (DDR3-1600) Registered CAS-11 Low Voltage Memory Kit	731765-B21
HPE 8GB (1x8GB) Single Rank x4 PC3-14900R (DDR3-1866) Registered CAS-13 Memory Kit	731761-B21
HPE 16GB (1x16GB) Dual Rank x4 PC3-14900R (DDR3-1866) Registered CAS-13 Memory Kit	708641-B21

Load Reduced DIMMs (LRDIMMS)

HPE 32GB (1x32GB) Quad Rank x4 PC3-14900L (DDR3-1866) Load Reduced CAS-13 Memory Kit	708643-B21
HP 64GB (1x64GB) Octa Rank x4 PC3-12800L (DDR3-1600) Load Reduced CAS-11 Memory Kit	700838-B21

Memory Expansion Options

HP DL580 Gen8 12 DIMM Slots Memory Cartridge	732411-B21

Memory

NOTE: A minimum of two memory cartridges are required (one per processor).
NOTE: A minimum of two memory DIMMs are required per cartridge (minimum of four DIMMs per server).

Storage

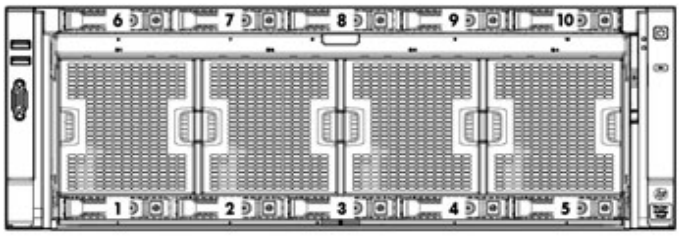

1-10 Ten (10) SFF Hot-plug HDD/SSD drive bays
NOTE: Drives installed in bays 6-10 require the optional SAS backplane kit.

Maximum Internal Storage

Hot Plug SFF SAS	12TB	10 x 1.2TB
Hot Plug SFF SAS SSD	16TB	10 x 1.6TB
Hot Plug SFF SATA SSD	8TB	10 x 800GB

Technical Specifications

System Unit	**Dimensions** (H x W x D) (with bezel)	6.88" x 17.48" x 29" (17.5cm x 44.4cm x 73.6cm)	
	Weight (approximate)	Maximum (all hard drives, power supplies, DIMMs and processors installed)	116.56.0 lb (52.87 kg)
		Minimum (one hard drive, two power supplies, four DIMMs, and two processors installed)	70.94 lb (32.18 kg)
	Input Requirements (per power supply)	Rated Line Voltage	100 - 120 VAC (1200W PS only) 200 - 240 VAC (1200W & 1500W PS)
		Rated Input Current	9.2A (100 VAC), 6.6A (200 VAC) - 1200W PS8.3A (200 VAC) - 1500W PS
		Rated Input Frequency	50 to 60 Hz
		Rated Input Power	1000 W (120 VAC), 1320 W (230VAC) - 1200W PS 1652 W (at 230 VAC) - 1500W PS
	BTU Rating	Maximum	3408 BTU/hr (120 VAC), 4500 BTU/hr (at 230 VAC) - 1200W PS5637 BTU/hr (230 VAC) - 1500W PS
	Power Specifications	**NOTE: To review typical system power ratings use the HPE Power Advisor which is available online located at url: http://www.hp.com/go/proliant-energy-efficient or http://www.hp.com/go/hppoweradvisor** **- Click on the system of interest. Example: DL580 G8** **- Follow the instructions of the next screens.**	
	Power Supply Output (per power supply)	Rated Steady-State Power and Maximum Peak Power	800 W (100 VAC low line),900 W (120 VAC low line), 1200W (200 - 240 VAC) for 1200W PS 1500W (200 - 240V) for 1500W PS
	System Inlet Temperature	Operating	10° to 35°C (50° to 95°F) at sea level with an altitude derating of 1.0°C per every 304.8 m (1.8°F per every 1000 ft) above sea level to a maximum of 3048 m (10,000 ft), no direct sustained sunlight. Maximum rate of change is 10°C/hr (18°F/hr). The upper limit may be limited by the type and number of options installed. System performance may be reduced if operating with a fan fault or above 30°C (86°F).
		Non-operating	-40° to 70°C (-40° to 158°F). Maximum rate of change is 20°C/hr (36°F/hr).
	Relative Humidity (non-condensing)	Operating	10% to 90% relative humidity (Rh), 28°C (82.4°F) maximum wet bulb temperature, non-condensing.
		Non-operating	5 to 95% relative humidity (Rh), 38.7°C (101.7°F) maximum wet bulb temperature, non-condensing.

Technical Specifications

	Altitude	Operating	3048 m (10,000 ft). This value may be limited by the type and number of options installed. Maximum allowable altitude change rate is 457 m/min (1500 ft/min).
		Non-operating	9144 m (30,000 ft). Maximum allowable altitude change rate is 457 m/min (1500 ft/min).
	Acoustic Noise	Listed are the declared A-Weighted sound power levels (LWAd) and declared average bystander position A-Weighted sound pressure levels (LpAm) when the product is operating in a 24°C ambient environment. Noise emissions were measured in accordance with ISO 7779 (ECMA 74) and declared in accordance with ISO 9296 (ECMA 109). The listed sound levels apply to standard shipping configurations. Additional options may result in increased sound levels. Typical configuration (Two Intel® Xeon® E7-4890 v2 processors, 8x16 GB DIMMs, five HDDs, Eight fans, Four power supplies) Idle • LWAd – 6.8 B • LpAm – 51.2 Operating • LWAd – 6.9 B • LpAm – 51.2 Performance Configuration (Four Intel® Xeon® E7-4890 v2 processors, 16x16 GB DIMMs, Ten HDDs, Eight fans, Four power supplies) Idle • LWAd – 6.7 B • LpAm – 50.7 Operating • LWAd – 6.9 B • LpAm – 51.3	
	Emissions Classification (EMC)	**FCC Rating**	Class A
		Normative Standards	CISPR 22; EN55022; EN55024; FCC CFR 47, Pt 15; ICES-003; CNS13438; GB9254; K22;K24; EN 61000-3-2; EN 61000-3-3; EN 60950-1; IEC 60950-1
		NOTE: Product conformance to cited product specifications is based on sample (type) testing, evaluation, or assessment. This product or family of products is eligible to bear the appropriate compliance logos and statements.	
HPE Smart Array P830i	**Dimensions**	Embedded	
	Disk Drive and Enclosure Interface - Transfer rate	12 Gb/s SAS, 6 Gb/s SAS & SATA	
	SAS Connectors	2 internal x8 Mini-SAS double-wide internal	
	Cache Memory Speed	DDR2-1866MHz with 72-bit wide bus at 14.9 GB/s (4 GiBytes Cache Module)	
	SAS Speed	12Gb/s per physical link	
	Cache Memory	FBWC cache is required. 2GB is included with BTO models. For CTO, 2GB or 4GB FBWC cache is required.	

Technical Specifications

	Logical Drives Supported	Up to 64 logical volumes
	Host Memory Addressing	64-bit, supporting greater than 4GiB server memory space
	RAID Support	RAID 6, 60 (Advanced Data Guarding) RAID 5, 50 (Distributed Data Guarding) RAID 1, 10 (Drive Mirroring), RAID 1 ADM, 10 ADM (Advanced Data Mirroring) RAID 0 (Striping)
HPE Ethernet 1Gb 4-port 331FLR Adapter	**HPE Flexible Network Technology**	HPE Flexible Network Technology consists of replaceable network solutions to meet customer requirements now and in the future.
	Network Interface	10Base-T/100Base-TX/1000Base-TX
	Compatibility	IEEE 802.3 10Base-T IEEE 802.3ab 1000Base-T IEEE 802.3u 100Base-TX IEEE 802.3x IEEE 802.3ad 1000Base-TX IEEE 802.3az IEEE 1588 802.1as IEEE 802.1q 100Base-TX
	Data Transfer Method	PCI-Express 2.0 x4
	Controller	BCM5719
	Network Transfer Rate	10Base-T (Full-Duplex) 20 Mb/s 100Base-TX (Full-Duplex) 200 Mb/s 1000Base-TX (Full-Duplex) 2000 Mb/s
	Connector	RJ-45
	Cable Support	10Base-T Categories 3, 4, or 5 UTP; up to 328 ft (100 m) 100Base-TX Category 5 or higher UTP; up to 328 ft (100 m) 1000Base-TX Category 5 or higher UTP; up to 328 ft (100 m)
HPE FlexFabric 10Gb 2-port 534FLR-SFP+ Adapter	**HPE Flexible Network Technology**	HPE Flexible Network Technology consists of replaceable network solutions to meet customer requirements now and in the future.
	Network Interface	IEEE 802.3 SFP+ (SX, SR & LR)
	Compatibility	802.3, 802.3ae, 802.3x, 802.2x, 802.3ad, 802.1Qaz, 802.1Qau, 802.1Qbb, 802.1Qbg, 802.1ax
	Data Transfer Method	PCI-Express 2.0 x8
	Controller	Broadcom BCM57810S chipset
	Network Transfer Rate	Two ports, each at 20 Gbps full duplex; 40 Gbps aggregate full duplex theoretical bandwidth.
	Connector	Two SFP+
	Cable Support	Maximum distances for CAT6 cable are 30 meters (98 feet). Maximum distances for CAT6a are 100 meters (328 feet).
HPE Ethernet 10Gb 2-	**HPE Flexible Network**	HPE Flexible Network Technology consists of replaceable network

Technical Specifications

port 560FLR-SFP+ Adapter	**Technology**	solutions to meet customer requirements now and in the future.	
	Network Interface	SFP+ for Direct Attach Cable copper or fiber	
	Compatibility	802.3, 802.1ab, 802.3x, 802.3ad, 802.1p/ 802.1q, 802.3ae, 802.1Qau	
	Data Transfer Method	PCI-Express 2.0 x8	
	Controller	Intel® 82599 Controller	
	Network Transfer Rate	Two ports, each at 20 Gbps full duplex; 40 Gbps aggregate full duplex theoretical bandwidth.	
	Connector	Two SFP+	
	Cable Support	10Base-T	Categories 3, 4, or 5 UTP; up to 328 ft (100 m)
		100Base-TX	Category 5 or higher UTP; up to 328 ft (100 m)
		1000Base-TX	Category 5 or higher UTP; up to 328 ft (100 m)
Environment-friendly Products and Approach	**End-of-life Management and Recycling**	Hewlett Packard Enterprise offers end-of-life Hewlett Packard Enterprise product return, trade-in, and recycling programs in many geographic areas. For trade-in information, please go to: **http://www.hp.com/go/green**. To recycle your product, please go to: **http://www.hp.com/go/green** or contact your nearest Hewlett Packard Enterprise sales office. Products returned to Hewlett Packard Enterprise will be recycled, recovered or disposed of in a responsible manner. The EU WEEE directive (2002/95/EC) requires manufacturers to provide treatment information for each product type for use by treatment facilities. This information (product disassembly instructions) is posted on the Hewlett Packard Enterprise web site at: **http://www.hp.com/go/green**. These instructions may be used by recyclers and other WEEE treatment facilities as well as Hewlett Packard Enterprise OEM customers who integrate and re-sell Hewlett Packard Enterprise equipment.	

Summary of Changes

Date	Version History	Action	Description of Change
23-Oct-2017	From Version 22 to 23	Changed	Care Pack naming and Service and Support- Parts and Materials updated.
31-Mar-2016	From Version 21 to 22	Changed	Memory section was revised.
		Removed	Obsolete SKUs were removed from the QuickSpecs.
16-Feb-2016	From Version 20 to 21	Changed	Additional Options section was revised.
		Removed	Obsolete SKUs were removed from the QuickSpecs.
17-Dec-2015	From Version 19 to 20	Added	Smart Buy models were added to the NA version.
01-Dec-2015	From Version 18 to 19	Added	New Hard Drives offering was added to HPE Hard Drives section.
		Changed	What's New was updated.
		Removed	Obsolete SKUs were removed from the QuickSpecs.
28-Sep-2015	From Version 17 to 18	Added	Added new 6Gb SATA Solid State Drives. Added new HPE OneView management software.
		Removed	Obsolete SKUs were removed from the QuickSpecs.
17-Aug-2015	From Version 16 to 17	Added	New Solid State Drives offering was added to HPE Hard Drives section.
01-Jun-2015	From Version 15 to 16	Added	New Hard Drives were added to Core Options.
		Removed	Obsolete SKUs were removed from Core Options and Additional Options.
15-Apr-2015	From Version 14 to 15	Changed	Version updated to sync content in Product Bulletin and QuickSpecs online.
09-Feb-2015	From Version 13 to 14	Added	SKUs added on HPE Uninterruptible Power Systems: J2Q99A, J2R00A, J2R01A, J2R02A, J2R03A, J2R04A, J2R05A, J2R09A, J2R10A, and L4Q11A. SKUs added on HPE Hard Drives: 779164-B21, 779168-B21, 779172-B21, 779176-B21, 764923-B21, 764925-B21, 764927-B21, and 764929-B21.
19-Dec-2014	From Version 12 to 13	Changed	Changes made to NA version only. Matching version numbers
01-Dec-2014	From Version 11 to 12	Changed	Core Options and Memory sections were updated
		Added	SKU Added on Hard Drives: 757339-B21
01-Nov-2014	From Version 10 to 11	Changed	Service and Support section was updated
29-Sep-2014	From Version 9 to 10	Added	SKUs added on HPE Hard Drives: 756657-B21, 756636-B21, 756621-B21, and 756601-B21.
09-Sep-2014	From Version 8 to 9	Changed	Overview and Additional Options sections were updated
		Removed	Obsolete SKU was removed: AF902A.
		Added	SKUs added: 732456-B21, 655710-B21, 655708-B21, and E7Y06A.
18-Aug-2014	From Version 7 to 8	Changed	What's New, Configuration Information (Memory, FlexibleLOM), Core Options (Memory, Hard Drives, Networking, HPE Graphics Options, HPE I/O Accelerators Options), Additional Options (HPE Power Cords, HPE Converged Network Adapters, HPE Infiniband Options, HPE Storage Options, HPE USB and SD Options) and Memory sections were revised.
14-Jul-2014	From Version 6 to 7	Changed	Correction made to the Technical Specifications section.
27-Jun-2014	From Version 5 to 6	Added	What's new section was added Acoustic noise in Technical Specifications section was added
		Changed	FlexibleLOM in standard features section was updated FlexibleLOM in Configuration Information-Factory Integrated Models was updated HPE Networking in Core Options was updated HPE Storage Options in additional options was updated

Summary of Changes

10-Jun-2014	From Version 4 to 5	Changed	Memory, Networking, Hard Drives, Storage Controllers, HPE Basic and Remote Monitoring Power Distribution Units were revised.
31-Mar-2014	From Version 3 to 4	Changed	Changes were made throughout.
07-Mar-2014	From Version 2 to 3	Changed	Changes were made in the Smart Buy section of the North America and Canada versions.
01-Mar-2014	From Version 1 to 2	Changed	Changes were made in the North America and Canada versions.



Sign up for updates

★ Rate this document

© Copyright 2017 Hewlett Packard Enterprise Development LP. The information contained herein is subject to change without notice. The only warranties for Hewlett Packard Enterprise products and services are set forth in the express warranty statements accompanying such products and services. Nothing herein should be construed as constituting an additional warranty. Hewlett Packard Enterprise shall not be liable for technical or editorial errors or omissions contained herein.

Microsoft and Windows NT are US registered trademarks of Microsoft Corporation. Unix is a registered trademark of The Open Group.

Intel, the Intel logo, Xeon and Xeon Inside are trademarks of Intel Corporation in the U.S. and other countries.

For hard drives, 1GB = 1 billion bytes. Actual formatted capacity is less.

c04199329 - 14743 - North America - V23 - 23-October-2017

