HPE ProLiant DL580 Gen8 Server - Product Information Reference

Part Number:
Published:
Edition:

HPE ProLiant DL580 Gen8 Server - Product Information Reference

Abstract

Part Number:
Published:
Edition:

© Copyright –

Notices

The information contained herein is subject to change without notice. The only warranties for Hewlett Packard Enterprise products and services are set forth in the express warranty statements accompanying such products and services. Nothing herein should be construed as constituting an additional warranty. Hewlett Packard Enterprise shall not be liable for technical or editorial errors or omissions contained herein.

Confidential computer software. Valid license from Hewlett Packard Enterprise required for possession, use, or copying. Consistent with FAR 12.211 and 12.212, Commercial Computer Software, Computer Software Documentation, and Technical Data for Commercial Items are licensed to the U.S. Government under vendor's standard commercial license.

Links to third-party websites take you outside the Hewlett Packard Enterprise website. Hewlett Packard Enterprise has no control over and is not responsible for information outside the Hewlett Packard Enterprise website.

Acknowledgments

Intel®, Itanium®, Optane™, Pentium®, Xeon®, Intel Inside®, and the Intel Inside logo are trademarks of Intel Corporation in the U.S. and other countries.

AMD and the AMD EPYC™ and combinations thereof are trademarks of Advanced Micro Devices, Inc.

Microsoft® and Windows® are either registered trademarks or trademarks of Microsoft Corporation in the United States and/or other countries.

Adobe® and Acrobat® are trademarks of Adobe Systems Incorporated.

Java® and Oracle® are registered trademarks of Oracle and/or its affiliates.

UNIX® is a registered trademark of The Open Group.

All third-party marks are property of their respective owners.

Revision history

Part number	Publication date	Edition	Summary of changes

Table of contents

Overview

- Summary 6
  - Product description 6
  - Product related documents 6
- Standard Models 6
  - New RoHS compliant part numbers 7
  - Standard models 7
  - Product related documents 8
- Product features 8

Specifications

- Physical specifications 16
- Environmental specifications 16
- Electrical specifications 18
- Safety certifications 19
- HPE Smart Array P830i/2 G 19
- HPE Ethernet 1Gb 4-port 331FLR adapter 20
- HPE FlexFabric 10Gb 2-port 534FLR-SFP+ adapter 21
- HPE Ethernet 10Gb 2-port 560FLR-SFP+ adapter 22
- Product related documents 23

Compatibility/Supportability

- Spare Parts 23
  - New model specific parts lists 23
  - Mechanical components 24
  - System components 25
  - Product related documents 35
- Option Parts 35
  - New model specific parts lists 36
  - Processor 37
  - Memory 38
  - Optical drives 39
  - Factory Settings 39
  - Hard drives 39
  - Networking 47
  - Power supplies 48

HPE Graphic options....49
Auxiliary power cables....49
Insight software....50
Converged infrastructure management software....51
I/O accelerator options....52
Storage controllers....53
Secure encryption....54
Power cords....54
Tape backup....55
Tape storage systems....56
Disk backup....56
Disk storage systems....57
Storage options....57
Uninterruptible power systems....58
Basic Power Distribution Units (PDU)....60
Remote Monitoring Power Distribution Units (mPDU)....62
Intelligent Power Distribution Units (iPDU)....63
Rack options....65
USB and SD options....68
Care pack services....68
Product related documents....69
Software Compatibility....70
OS Compatibility....70
Useful Links....70

Summary

Subtopics

Product description
Product related documents

Product description



The HPE ProLiant DL580 Gen8 Server is an Enterprise-Grade four socket (4S) x86 server offering break through performance, Rock-Solid reliability, and compelling consolidation and manageability efficiencies. It is ideal for Mission-Critical enterprise, business intelligence, and database applications.

Product related documents

Click here to view a list of product related documents.

Standard Models

Subtopics

New RoHS compliant part numbers
Standard models
Product related documents

New RoHS compliant part numbers

To find the latest RoHS compliance information, please use the HPE PartSurfer (**Click here to visit HPE PartSurfer website**) and click on one of the linked model numbers. When locating RoHS information in PartSurfer, you can use the Option part number for the components, the sales order number for a system that the component is used in, or the Spare part number for a specific part. You can find the sales order numbers and Option part numbers in the Product QuickSpecs.

Standard models

Model	Model Number	Config Code	Processor	Processor Spare Part	System Board Spare Part	Memory	Hard Drive	Storage Controller	Network Controller
HPE ProLiant DL580 Gen8 E7-4890v2 4P 128GB-R P830i SAS 5 SFF 1500W RPS Server	728544-001 **Click here to obtain parts list for this model**.	-	(4) Intel Xeon E7-4890v2 (2.8 GHz/15-core/37.5MB/155 W) Processors	734145-001	735511-001	128GB (16 x 8GB DIMMs) PC3-14900R DIMMs (DDR3) installed in (8)Memory Cartridges	No drives ship standard	HPE Smart Array P830i/2GB FBWC 12 Gbps SAS controller	HPE FlexFabric 10Gb 2P 534FLR-SFP+ Adapter
HPE ProLiant DL580 Gen8 E7-4850v2 4P 128GB-R P830i/2G 534FLR-SFP+ 1500W RPS Server	728546-001 **Click here to obtain parts list for this model**.	-	(4) Intel Xeon E7-4850v2 (2.3 GHz/12-core/24MB/105 W) Processors	734150-001		128GB (16 x 8GB DIMMs) PC3-14900R DIMMs (DDR3) installed in (8)Memory Cartridges		HPE Smart Array P830i/2GB FBWC 12 Gbps SAS controller	HPE FlexFabric 10Gb 2P 534FLR-SFP+ Adapter
HPE ProLiant DL580 Gen8 E7-4809v2 2P 64GB-R	728547-001 **Click here to obtain part**	-	(2) Intel Xeon E7-4809v2 (1.9 GHz/6-core/12MB/1	734155-001		64GB (8 x 8GB DIMMs) PC3-14900R DIMMs (DDR3) i		HPE Smart Array P830i/2GB FBWC 12 Gbps SAS controller	HPE Ethernet 1Gb 4P 331FLR Adapter

Model	Model Number	Config Code	Processor	Processor Spare Part	System Board Spare Part	Memory	Hard Drive	Storage Controller	Network Controller
P830i/2G 331FLR 1200W PS Server	**s list for this model**.		05 W) Processors			nstalled in (4)Memory Cartridges			

Product related documents

Click here to view the list of product related documents.

Product features

Feature	Description
Processor (One or more of the following depending on model)	**Fifteen-Core processors** [1] • Intel Xeon E7-4890v2 (2.8 GHz/15-core/37.5MB/155 W) processor • Intel Xeon E7-4880v2 (2.5 GHz/15-core/37.5MB/130 W) processor • Intel Xeon E7-4870v2 (2.3 GHz/15-core/30MB/130 W) processor • Intel Xeon E7-8880Lv2 (2.2 GHz/15-core/37.5 MB/105 W) processor **Twelve-Core processors** [2] • Intel Xeon E7-4860v2 (2.6 GHz/12-core/30MB/130 W) processor • Intel Xeon E7-4850v2 (2.3 GHz/12-core/24MB/105 W) processor • Intel Xeon E7-8857v2 (3.0 GHz/12-core/30MB/130 W) processor

Feature	Description
	Ten-Core processors [3] • Intel Xeon E7-4830v2 (2.2 GHz/10-core/20MB/105 W) processor • Intel Xeon E7-8891v2 (3.2 GHz/10-core/37.5MB/155 W) processor **Eight-Core processors** Intel Xeon E7-4820v2 (2.0 GHz/8-core/16MB/105 W) processor **Six-Core processors** [3] • Intel Xeon E7-4809v2 (1.9 GHz/6-core/12MB/105 W) processor • Intel Xeon E7-8893v2 (3.4 GHz/6-core/37.5MB/155 W) processor
Cache memory (One of the following depending on model)	• 37.5MB (1 x 37.5MB) Level 3 cache (E7-4890v2, E7-8880Lv2, E7-4880v2, E7-8891v2, E7-8893v2) • 30MB (1 x 30MB) Level 3 cache (E7-8857v2, E7-4870v2, E7-4860v2) • 24MB (1 x 24MB) Level 3 cache (E7-4850v2) • 20MB (1 x 20MB) Level 3 cache (E7-4830v2) • 16MB (1 x 16MB) Level 3 cache (E7-4820v2) • 12MB (1 x 12MB) Level 3 cache (E7-4809v2)
Chipset [4]	• Intel C602J Chipset • Intel Xeon E7-4800/8800 v2 processor family
Upgradeability [5]	• Up to four (4) processors • Up to Ninety-Six (96) Dual Data Rate (DDR3) Dual In-line Memory Module (DIMM) slots • Up to nine (9) PCIe Gen3 expansion slots

Feature	Description
	• Up to ten (10) SFF internal Hard Disk Drive (HDD)/ Solid State Drive (SSD) drive bays • Up to four (4) redundant Hot-Plug power supplies
Memory [6] (One of the following depending on model)	**Type** / **HPE SmartMemory** DDR3 Registered (RDIMM) and Load Reduced (LRDIMM) DIMM Slots available: 96 DIMM slots Maximum: 6TB (96 x 64GB)
System fault management and diagnostics	• HPE Advanced Error Recovery • HPE Memory Quarantine • HPE Advanced Error Containment • HPE Advanced Fault Resiliency
FlexibleLOM [7]	• HPE Ethernet 1Gb 4-port 331FLR Factory Installed Option (FIO) Adapter • HPE Ethernet 1Gb 4-port 366FLR FIO Adapter • HPE Ethernet 10Gb 2-port 533FLR-T FIO Adapter • HPE FlexFabric 10Gb 2-port 534FLR-SFP+ FIO Adapter • HPE Ethernet 10Gb 2-port 560FLR-SFP+ FIO Adapter • HPE Ethernet 10Gb 2-port 561FLR-T FIO Adapter • HPE IB FDR/EN 40Gb 2P 544+FLR-QSFP Adapter

Feature	Description

Expansion slots [8]

Processor	Expansion Slot #	Technology	Width	Connector Width*	Bus / Device Number**	Form Factor	Notes
4	1	PCIe 3.0	x16	x16	C0/03/0	FH/FL	N/A
4	2	PCIe 3.0	x16	x16	C0/02/0	FH/FL	N/A
3	3	PCIe 3.0	x16	x16	80/03/0	FH/FL	N/A
3	4	PCIe 3.0	x8	x16	80/02/0	FH/FL	N/A
3	5	PCIe 3.0	x8	x16	80/02/1	FH/FL	N/A
2	6	PCIe 3.0	x16	x16	40/03/0	FH/FL	N/A
2	7	PCIe 3.0	x8	x16	40/02/0	FH/FL	N/A
2	8	PCIe 3.0	x8	x16	40/02/1	FH/FL	N/A
1	9	PCIe 3.0	x16	x16	00/03/0	FH/FL	N/A

Storage controller [9] (One of the following depending on model)

HPE Smart Array P830i/2G Flash Backed Write Cache (FBWC) Controller

The FBWC increases cache data retention capabilities from two days of existing Battery Backed Write Cache (BBWC) to infinite data retention.

- Delivers 12 Gb/s line rate performance
- Standard on all models
- Supports HPE Secure Encryption as an option
- Transportable data protection

Feature	Description
	• Increases overall controller performance
Internal storage devices	

HDD Backplane	Internal SAS Lower and upper backplanes supports up to ten Small Form Factor (SFF) HDD or SSD
Diskette drive	None
Optional optical drive	None
Hard drives	None ship standard

Maximum internal storage

Hot-Plug SFF SAS	12TB	10 x 1.2TB
Hot-Plug SFF SAS SSD	16TB	10 x 1.6TB
Hot-Plug SFF SATA SSD	8TB	10 x 800GB

Interfaces

Serial	1
Video	1 front; 1 rear
Network RJ-45	4
iLO 4 Remote Management	1
micro-SD Slot	1
USB 2.0 Ports	8 total: 2 front; 4 rear; 2 internal

Feature	Description
Common slot power supply [10] (One of the following depending on power requirements)	• HPE 1500 W common slot platinum plus Hot-Plug power supply • HPE 1200 W common slot platinum plus Hot-Plug power supply
System fans	4 Hot-Plug fans (Eight rotors with N+1 redundancy)
Graphics	Integrated Matrox G200 video standard • 1280 x 1024 (32 b/p) • 1920 x 1200 (16 b/p) HPE iLO 4 On system management memory • 16MB Flash • 256MB DDR3 with ECC (112MB after ECC and video)
Form factor	4U rack
Security	• Power-ON password • Keyboard password • External USB port enable/disable • Network Server Mode • Serial interface control • Administrator's password • Trusted Platform Module (TPM) • Intel Secure Key • HPE Secure encryption (Smart Array controller) • HPE Advanced data guard (Smart Array controller)
Industry standard compliance [11]	• ACPI 2.0. Compliant • PCIE 2.0 Compliant

Feature	Description
	• PXE Support • WOL Support • Physical Address Extension (PAE) Support • Microsoft Logo certifications • USB 2.0 Support
HPE Server Unified Extensible Firmware Interface (UEFI) ROM [12]	UEFI enables numerous new capabilities, including both industry standard functionality and features sp ecific to HPE ProLiant servers. Following are some of the features that UEFI enables and that the HPE ProLiant DL580Gen8 can support when configured for UEFI boot operation: • Secure boot • Operating System (OS) specific functionality • Support for > 2.2TB (Using GPT) boot drives • UEFI Shell • PXE Boot support for IPv6 networks • PXE Multicast boot allowing for faster PXE depl oyments for large numbers of servers • Boot support for option cards that only support a UEFI option ROM

NOTE:

1. This is a power optimized processor.
2. This is frequency optimized processor suited high performance computing applications.
3. This is a lower core, higher frequency processor for software licensing cost optimization .
4. **Click here for more information regarding Intel Servers Chipsets available**.
5.
   - PCIe Slot availability is dependent on the number of processors installed. Refer **Ex pansion slots** section for more details.
   - Five drive bays come standard. An optional backplane kit with five drive bays can be ordered for ten drives.
6.

Feature	Description

- HPE memory from previous generation servers are not qualified or warranted with this HPE ProLiant Server. HPE SmartMemory is required to realize the memory per formance improvements and enhanced functionality listed in this document for Ge n8. For additional information, see the HPE SmartMemory QuickSpecs.

  Click here to access HPE SmartMemory QuickSpecs.

- LRDIMM and RDIMM are distinct memory technologies and cannot be mixed within a server.
- Depending on the memory configuration and processor model, the memory speed may run at 1600 MHz, 1333 MHz, or 1066 MHz. See the HPE Server Memory Conf igurator page.

  Click here to access the HPE Server Memory Configurator page.

7.

- This adapter does not support FCOE Boot from SAN functionality on VMWare and FCOE with RHEL 5.9.
- WoL Feature is not supported on the DL580 Gen8 with FlexLOMs.

8.

- Up to 9 slots supported; All Full-Length/Full-Height. Standard: 4 PCI-E 3.0 x8, 5 PC I-E 3.0 x16.
- PCIe Slot availability is dependent on the number of processors installed.
  - * Default bus assignment. Inserting cards with PCI Bridges may alter the actual bus assignment number.
  - ** Slots are enumerated differently based on OS. MS OS's enumerate from low est to highest Device ID by bus (Starting with the lowest bus).
  - FL= Full length; FH = Full height.

9. **Click here to access the Worldwide QuickSpecs of HPE Smart Array P830 Controlle r**.

10.

- 1500 W power supply supports high line voltage only.
- A minimum of two (2) power supplies are required. Four (4) 1500 W power suppli es offers N+N redundancy for highly loaded configurations.

11. Not supported with FlexLOMs on DL580 Gen8.
12.

- For UEFI Boot operation, boot environment and OS image installations should be c onfigured properly to support UEFI.

Feature	Description
	• For more information on the HPE ProLiant System BIOS and UEFI, see the UEFI In formation library. **Click here to access HPE Information Library page**. • HPE UEFI FIO Setting (758959-B21) can be selected to configure the system in UE FI Mode in the factory.

Physical specifications

Specifications	Description
Dimensions (H x W x D)(with bezel)	17.6 x 48.3 x 70.0 cm (6.94 x 19.0 x 27.55 in)
Weight (approximate)	• Maximum(all hard drives, power supplies, DIMMs and processors installed) ◦ 45.4 kg (100.0 lb) • Minimum (one hard drive, two power supplies, fo ur DIMMs, and two processors installed) ◦ 30.0 kg (66.0 lb)

Environmental specifications

Specifications	Description
System inlet temperature	
Operating	10° to 35°C (50° to 95°F) at sea level with an altitu de derating of 1.0°C per every 304.8 m (1.8°F per every 1000 ft) above sea level to a maximum of 304 8 m (10,000 ft), no direct sustained sunlight. Maxim um rate of change is 10°C/hr (18°F/hr). The upper li

Specifications	Description
	mit may be limited by the type and number of option s installed. System performance may be reduced if operating wit h a fan fault or above 30°C (86°F).
Non-operating	-30° to 60°C (-22° to 140°F). Maximum rate of chan ge is 20°C/hr (36°F/hr).
Relative humidity(non-condensing)	
Operating	10 to 90% relative humidity (Rh), 28°C (82.4°F) maxi mum wet bulb temperature, non-condensing.
Non-operating	5 to 95% relative humidity (Rh), 38.7°C (101.7°F) m aximum wet bulb temperature, non-condensing.
Altitude	
Operating	3048 m (10,000 ft). This value may be limited by th e type and number of options installed. Maximum all owable altitude change rate is 457 m/min (1500 ft/m in).
Non-operating	9144 m (30,000 ft). Maximum allowable altitude cha nge rate is 457 m/min (1500 ft/min).
Acoustic noise [1]	
Idle	• L WAd - 6.4 B (with PCI-E) • L pAm - NA dBA
Operating	• L WAd - 6.8 B (with PCI-E) • L pAm - NA dBA

NOTE:

1. Listed are the declared A-Weighted sound power levels (LWAd) and declared average bystander position A-Weighted sound pressure levels (LpAm) when the product is operatin g in a 23°C ambient environment. Noise emissions were measured in accordance with ISO 7 779 (ECMA 74) and declared in accordance with ISO 9296 (ECMA 109).

Specifications	Description
	Product conformance to cited product specifications is based on sample (type) testing, eval uation, or assessment. This product or family of products is eligible to bear the appropriate compliance logos and statements.

Electrical specifications

Specifications	Description
Input requirements(per power supply)	
Rated line voltage	• 100 - 127 V ac • 200 - 240 V ac
Rated input current	• 12 A (at 100 V ac) • 8 A (at 200 V ac)
Rated input frequency	50 to 60 Hz
Rated input power	• 1161 W (at 100 V ac) • 1598 W (at 240 V ac)
BTU rating	
Maximum	• 3960 BTU/hr (at 100 V ac) • 5450 BTU/hr (at 200 V ac)
Power supply output (per power supply)	
Rated steady-state power	• 910 W (low line) • 1300 W (high line)
Maximum peak power	• 910 W (low line)

Specifications	Description
	• 1300 W (high line)

Safety certifications

Certifications	Description
Emissions Classification (EMC)	
FCC rating	Class A
Normative standards	CISPR 22; EN55022; EN55024; FCC CFR 47, Pt 15; ICES-003; CNS13438; GB9254; K22;K24; EN 61000-3-2; EN 61000-3-3; EN 60950-1; IEC 60950-1

HPE Smart Array P830i/2 G

Specifications	Description
Dimensions	Embedded
Disk drive and enclosure interface - transfer rate	12 Gb/s SAS, 6 Gb/s SAS & SATA
SAS connectors	2x8 ports double-wide internal
Cache memory speed	DDR2-800MHz with 72-bit wide bus
Server interface	x4 PCIe 2.0 provides 2 GB/s maximum bandwidth
SAS speed	Eight 12 Gb/s SAS links provide 9.6 GB/s maximum bandwidth
Cache memory	• Zero Memory RAID has no cache memory • 40-bit 256MB ECC protected cache (battery upgrade available)

Specifications	Description
	• 72-bit 512MB BBWC or 72-bit 512MB and 1G F BWC
Logical drives supported	• Zero Memory, Up to 2 logical volumes (8 physica l drives) • Up to 64 logical drives with cache
Host memory addressing	64-bit, supporting greater than 4GB server memory space
RAID support	• RAID 6, 60 (Advanced Data Guarding)[1] • RAID 5, 50 (Distributed Data Guarding)[1] • RAID 10 (Striping & Mirroring) • RAID 0 (Striping), RAID 1 (Mirroring)

NOTE:

1. A minimum of 512MB cache is required to enable RAID 5, 50, 6, 60

HPE Ethernet 1Gb 4-port 331FLR adapter

Specifications	Description
HPE flexible network technology	HPE Flexible Network Technology consists of replace able network solutions to meet customer requiremen ts now and in the future.
Network interface	10Base-T/100Base-TX/1000Base-TX
Compatibility	• IEEE 802.3 10Base-T • IEEE 802.3ab 1000Base-T • IEEE 802.3u 100Base-TX

Specifications	Description
	• IEEE 802.3ad 1000Base-TX • IEEE 802.1p 100Base-TX • IEEE 802.1q 100Base-TX
Data transfer method	PCI-Express 2.0 x4
Controller	BCM5719
Network transfer rate	• 10Base-T (Full-Duplex) - 20 Mb/s • 100Base-TX (Full-Duplex) - 200 Mb/s • 1000Base-TX (Full-Duplex) - 2000 Mb/s
Connector	RJ-45
Cable support	• 10Base-T - Categories 3, 4, or 5 UTP; up to 328 ft (100 m) • 100Base-TX - Category 5 or higher UTP; up to 3 28 ft (100 m) • 1000Base-TX - Category 5 or higher UTP; up to 328 ft (100 m)

HPE FlexFabric 10Gb 2-port 534FLR-SFP+ adapter

Specifications	Description
HP flexible network technology	HP Flexible Network Technology consists of replace able network solutions to meet customer requiremen ts now and in the future.
Network interface	IEEE 802.3 SFP+ (SX, SR & LR)
Compatibility	802.3, 802.3ae, 802.3x, 802.2x, 802.3ad, 802.1Qa z, 802.1Qau, 802.1Qbb, 802.1Qbg, 802.1ax
Data transfer method	PCI-Express 2.0 x8

Specifications	Description
Controller	Broadcom BCM57810S chipset
Network transfer rate	Two ports, each at 20 Gb/s full duplex; 40 Gb/s aggre gate full duplex theoretical bandwidth
Connector	Two SFP+
Cable support	• Maximum distances for CAT6 cable are 30 m (98 ft) • Maximum distances for CAT6a are 100 m (328 ft)

HPE Ethernet 10Gb 2-port 560FLR-SFP+ adapter

Specifications	Descriptions
HPE flexible network technology	HPE Flexible Network Technology consists of replace able network solutions to meet customer requiremen ts now and in the future.
Network interface	SFP+ for Direct Attach Cable copper or fiber
Compatibility	802.3, 802.1ab, 802.3x, 802.3ad, 802.1p/ 802.1q, 802.3ae, 802.1Qau
Data transfer method	PCI-Express 2.0 x8
Controller	Intel 82599 Controller
Network transfer rate	Two ports, each at 20 Gb/s full duplex; 40 Gb/s aggre gate full duplex theoretical bandwidth
Connector	Two SFP+
Cable support	• 10Base-T - Categories 3, 4, or 5 UTP; up to 328 ft (100 m) • 100Base-TX - Category 5 or higher UTP; up to 3 28 ft (100 m)

Specifications	Descriptions
	• 1000Base-TX - Category 5 or higher UTP; up to 328 ft (100 m)

Product related documents

Click here to view a list of product related documents.

Spare Parts

Subtopics

New model specific parts lists
Mechanical components
System components
Product related documents

New model specific parts lists

IMPORTANT: To obtain current part number information for a specific product model, use the Standard Models page for this product family.

.

- The product Standard Models page now links the model SKU numbers to the spare parts list for each model found on the HP PartSurfer web site. (To report missing or incorrect parts information in PartSurfer, please use the "Contact us" and "Missing or incorrect data" links within the PartSurfer web site utility).
- To look up RoHS-compliant information in PartSurfer, use the component's option part number or the sales order number for a system in which the component is used (available in the QuickSpecs or Standard Models page).

Mechanical components

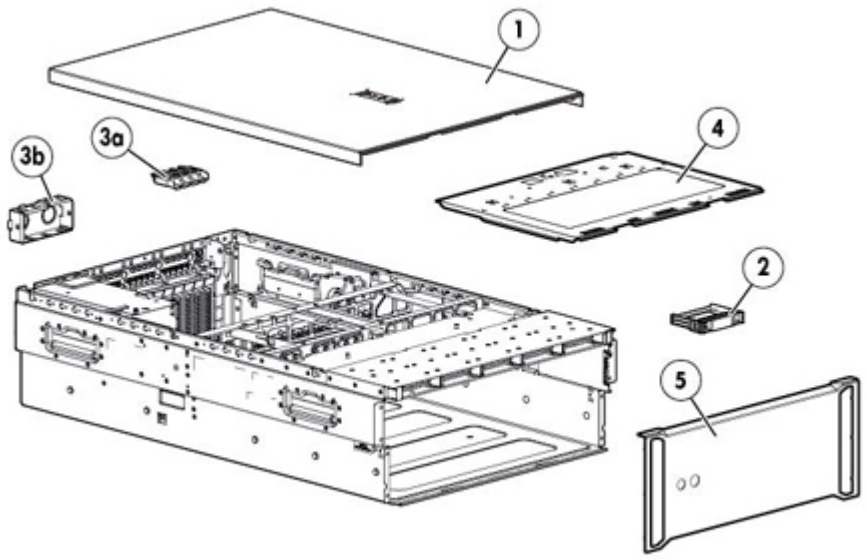

Item	Description	Spare PartNumber	Customer SelfRepair
1	Server access panel	735510-001	Mandatory [1]
2	Hard drive blank (cover) - To fill empty small form fa ctor (SFF) drive bays	670033-001	Mandatory [1]
3	**Plastics kit**	735516-001	Mandatory [1]
3a	FBWC holder		
3b	Power supply blank		
3c	PCI slot cover [2]		
3d	PCI retainer [2]		
4	Processor memory drawe r accesspanel	735517-001	Mandatory [1]
5	Front bezel assembly	735528-001	Mandatory [1]

NOTE:

Item	Description	Spare PartNumber	Customer SelfRepair

1. Mandatory - Parts for which customer self repair is mandatory. If you request HP to replace these parts, you will becharged for the travel and labor costs of this service.

2. Not shown

System components

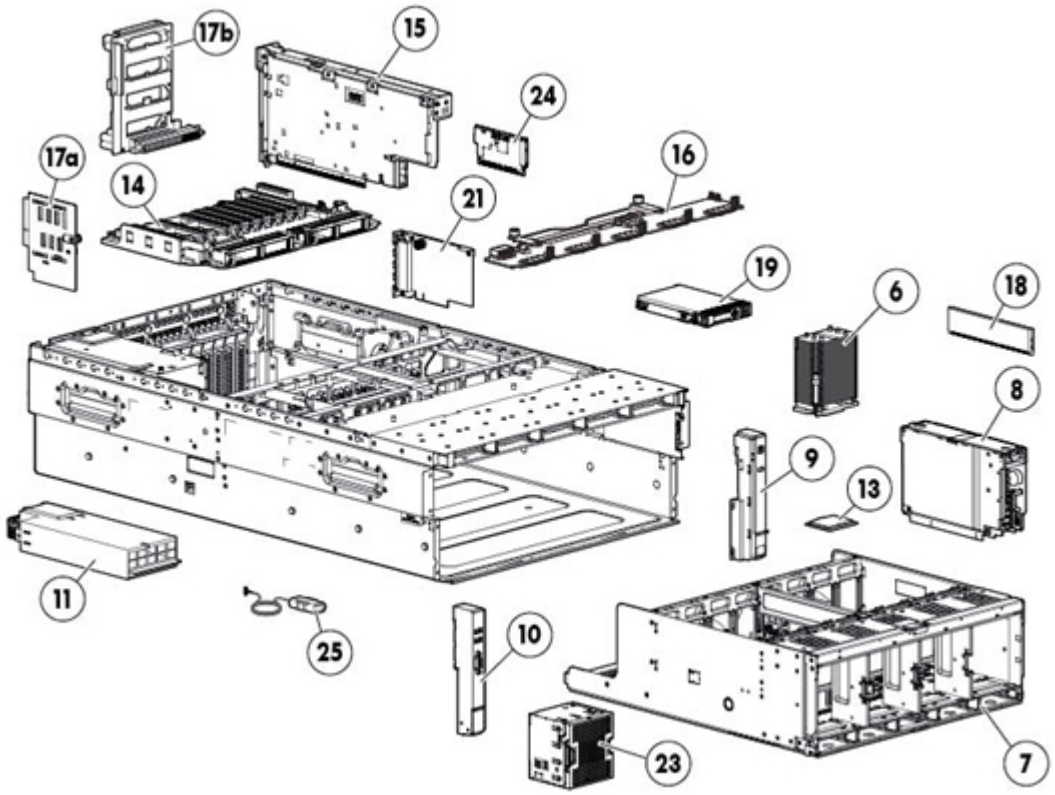

Item	Description	Spare PartNumber	CustomerSelf Repair
6	Heatsink (Screw type assembly)	735514-001	Optional [1]
7	System processor and memory cartridge drawer assembly	735518-001	Optional [1]

Item	Description	Spare PartNumber	CustomerSelf Repair
8	Memory cartridge assembly (Holds up to 12 DIMM modules for the processor)	735522-001	Optional [1]
9	Power/UID assembly (right ear bezel)	735523-001	Optional [1]
10	**Video/USB assembly (left ear bezel)**	735525-001	Optional [1]
11	1200 W AC Common Slot (CS) 'Platinum Plus' hot-plug power supply - Installs in computer chassis as primary or redundant supply (94% efficiency) - Requires 100-240 V ac at 50/60 Hz	660185-001	Mandatory [2]
12	1500 W AC CS 'Platinum Plus' hot-plug power supply - Installs in computer chassis as primary or redundant supply (94% efficiency) - Requires 100-240 V ac at 50/60 Hz [3]	704604-001	Mandatory [2]
13	**Processors**		
13a	Intel Xeon E7-8880L v2 Fifteen-Core low-power processor - 2.20 GHz (Ivy Bridge, 37.5MB Level-3 cache, 105 W Thermal Design Power (TDP), FCLGA 2011-pin socket)	734144-001	Optional [1]
13b	Intel Xeon E7-4890 v2 Fifteen-Core processor - 2.80 GHz (Ivy Bridge, 37.5MB Level-3 cache, 155 W TDP, FCLGA 2011-pin socket) [3]	734145-001	Optional [1]
13c	Intel Xeon E7-4880 v2 Fifteen-Core processor - 2.50 GHz (Ivy Bridge, 37.5MB Level-3 cache, 130	734146-001	Optional [1]

Item	Description	Spare PartNumber	CustomerSelf Repair
	W TDP, FCLGA 2011-pin socket) [3]		
13d	Intel Xeon E7-4870 v2 Fifteen-Core processor - 2.30 GHz (Ivy Bridge, 30MB Level-3 cache, 130 W TDP, FCLGA 2011-pin socket) [3]	734147-001	Optional [1]
13e	Intel Xeon E7-8857 v2 Twelve-Core processor - 3.00 GHz (Ivy Bridge, 30MB Level-3 cache, 130 W TDP, FCLGA 2011-pin socket) [3]	734148-001	Optional [1]
13f	Intel Xeon E7-4860 v2 Twelve-Core processor - 2.60 GHz (Ivy Bridge, 30MB Level-3 cache, 130 W TDP, FCLGA 2011-pin socket) [3]	734149-001	Optional [1]
13g	Intel Xeon E7-4850 v2 Twelve-Core processor - 2.30 GHz (Ivy Bridge, 24MB Level-3 cache, 105 W TDP, FCLGA 2011-pin socket) [3]	734150-001	Optional [1]
13h	Intel Xeon E7-8891 v2 Ten-Core processor - 3.20 GHz (Ivy Bridge, 37.5MB Level-3 cache, 155 W TDP, FCLGA 2011-pin socket) [3]	734151-001	Optional [1]
13i	Intel Xeon E7-4830 v2 Ten-Core processor - 2.20 GHz (Ivy Bridge, 20MB Level-3 cache, 105 W TDP, FCLGA 2011-pin socket) [3]	734152-001	Optional [1]
13j	Intel Xeon E7-4820 v2 Eight-Core processor - 2.00 GHz (Ivy Bridge, 16MB Level-3 cache, 105 W T	734153-001	Optional [1]

Item	Description	Spare PartNumber	CustomerSelf Repair
	DP, FCLGA 2011-pin socket) [3]		
13k	Intel Xeon E7-8893 v2 Six-Core processor - 3.40 GHz (Ivy Bridge, 37.5MB Level-3 cache, 155 W TDP, FCLGA 2011-pin socket) [3]	734154-001	Optional [1]
13l	Intel Xeon E7-4809 v2 Six-Core processor - 1.90 GHz (Ivy Bridge, 12MB Level-3 cache, 105 W TDP, FCLGA 2011-pin socket) [3]	734155-001	Optional [1]
	Boards		
14	System I/O board assembly - Includes the SPI board connector, nine PCIe connectors, FlexibleLOM connector, and subpan	735511-001	Optional [1]
15	System Peripheral Interface (SPI) board - Includes the rear panel USB ports (4x), serial port, and video connectors, plus internal mini-SAS, SAS cache module, TPM, front video/USB, power/UID, internal USB connectors, and the system battery	869706-001	Optional [1]
	SPI board - Includes the rear panel USB ports (4x), iLO chip, serial port, and video connectors, plus internal mini-SAS, SAS cache module, TPM, front video/USB, power/UID, internal USB connectors, and the system battery	735512-001	Optional [1]
16	Top SAS hard drive backplane board	735520-001	Optional [1]

Item	Description	Spare PartNumber	CustomerSelf Repair
17	Power supply backplane assembly	735526-001	-
17a	Power daughter board	-	Optional [1]
17b	Power supply backplane	-	Optional [1]
18	**DIMMs**		
18a	4GB, 1600 MHz, PC3L-12800R-11, DDR3, single-rank x4, 1.35 V, registered dual in-line memory module (RDIMM)	715282-001	Mandatory [2]
18b	8GB, 1600 MHz, PC3L-12800R-11, DDR3, dual-rank x4, 1.35 V, RDIMM	715283-001	Mandatory [2]
18c	16GB dual in-line memory module (DIMM), PC3L-12800R-11, 1Gx4	715284-001	Mandatory [2]
18d	4GB, 1866 MHz, PC3-14900R-13, DDR3, dual-rank x4, 1.50 V, RDIMM	715272-001	Mandatory [2]
18e	8GB, 1866 MHz, PC3-14900R-13, DDR3, dual-rank x4, 1.50 V, RDIMM	715273-001	Mandatory [2]
18f	16GB, 1866 MHz, PC3-14900R-13, DDR3, dual-rank x4, 1.50 V, RDIMM	715274-001	Mandatory [2]
18g	32GB, 1866 MHz, PC3-14900L-13, DDR3, quad-rank x4, 1.50 V, load reduced dual in-line memory module (LRDIMM)	715275-001	Mandatory [2]
	Drives		
19	**Hard drives**		
19a	1.2TB hot-plug dual-port SAS hard disk drive - 10,000 RPM, 6 Gb/s transfer	718292-001	Mandatory [2]

Item	Description	Spare PartNumber	CustomerSelf Repair
	rate, 2.5 in small form fa ctor (SFF), Enterprise, Sm artDrive Carrier (SC)		
19b	1.2TB hot-plug SAS hard disk drive - 10,000 RPM, 6 Gb/s transfer rate, 2.5 i n SFF, Enterprise, SC [3]	697631-001	Mandatory [2]
19c	900GB hot-plug dual-por t SAS hard disk drive - 10 ,000 RPM, 6 Gb/s transfe r rate, 2.5 in SFF, Enterpr ise, SC - Not for use in M SA products [3]	653971-001	Mandatory [2]
19d	600GB hot-plug dual-por t SAS hard disk drive - 10 ,000 RPM, 6 Gb/s transfe r rate, 2.5 in SFF, Enterpr ise, SC - Not for use in M SA products [3]	653957-001	Mandatory [2]
19e	450GB hot-plug dual-por t SAS hard disk drive - 10 ,000 RPM, 6 Gb/s transfe r rate, 2.5 in SFF, Enterpr ise, SC - Not for use in M SA products [3]	653956-001	Mandatory [2]
19f	300GB hot-plug dual-por t SAS hard disk drive - 10 ,000 RPM, 6 Gb/s transfe r rate, 2.5 in SFF, Enterpr ise, SC - Not for use in M SA products [3]	653955-001	Mandatory [2]
19g	300GB hot-plug dual-por t SAS hard disk drive - 15 ,000 RPM, 6 Gb/s transfe r rate, 2.5 in SFF, Enterpr ise, SC - Not for use in M SA products [3]	653960-001	Mandatory [2]
19h	146GB hot-plug dual-por t SAS hard disk drive - 15 ,000 RPM, 6 Gb/s transfe r rate, 2.5 in SFF, Enterpr	653950-001	Mandatory [2]

Item	Description	Spare PartNumber	CustomerSelf Repair
	ise, SC - Not for use in M SA products [3]		
19i	1TB hot-plug dual-port SAS hard disk drive - 7, 200 RPM, 6 Gb/s transfer rate, 2.5 in SFF, Midline, S C - Not for use in MSA p roducts [3]	653954-001	Mandatory [2]
19j	500GB hot-plug dual-por t SAS hard disk drive - 7, 200 RPM, 6 Gb/s transfer rate, 2.5 in SFF, Midline, S C - Not for use in MSA p roducts [3]	653953-001	Mandatory [2]
20	**Solid state drives** [3]		
20a	120GB hot-plug Solid State Drive (SSD) - SATA interface, 6 Gb/s transfer rate, 2.5 in SFF, Value En durance, Enterprise Boot, SC	718136-001	Mandatory [2]
20b	80GB hot-plug SSD - SATA interface, 6 Gb/s tra nsfer rate, 2.5 in SFF, Val ue Endurance, Enterprise Boot, SC	734562-001	Mandatory [2]
20c	800GB hot-plug SSD - SATA interface, 6 Gb/s tra nsfer rate, 2.5 in SFF, 6G b per second transfer rate , Value Endurance, Enterp rise Value, SC	718139-001	Mandatory [2]
20d	480GB hot-plug SSD - SATA interface, 6 Gb/s tra nsfer rate, 2.5 in SFF, Val ue Endurance, Enterprise Value, SC	718138-001	Mandatory [2]
20e	600GB hot-plug SSD - SATA interface, 6 Gb/s tra nsfer rate, 2.5 in SFF, Val	739959-001	Mandatory [2]

Item	Description	Spare PartNumber	CustomerSelf Repair
	ue Endurance, Enterprise Value, SC		
20f	300GB hot-plug SSD - SATA interface, 6 Gb/s transfer rate, 2.5 in small for factor (SFF), Value Endurance, Enterprise Value, SC	739954-001	Mandatory [2]
20g	240GB hot-plug SSD - SATA interface, 6 Gb/s transfer rate, 2.5 in SFF, Value Endurance, Enterprise Value, SC	718137-001	Mandatory [2]
20h	800GB hot-plug SSD - SATA interface, 6 Gb/s transfer rate, 2.5 in SFF, Multi-Level Cell (MLC), Mainstream Endurance, Enterprise Mainstream, SC	692167-001	Mandatory [2]
20i	400GB hot-plug SSD - SATA interface, 6 Gb/s transfer rate, 2.5 in SFF, MLC, Mainstream Endurance, Enterprise Mainstream, SC	692166-001	Mandatory [2]
20j	200GB hot-plug SSD - SATA interface, 6 Gb/s transfer rate, 2.5 in SFF, MLC, Mainstream Endurance, Enterprise Mainstream, SC	692165-001	Mandatory [2]
20k	100GB hot-plug SSD - SATA interface, 6 Gb/s transfer rate, 2.5 in SFF, MLC, Mainstream Endurance, Enterprise Mainstream, SC	692164-001	Mandatory [2]
20l	800GB hot-plug SSD - SAS interface, 6 Gb/s transfer rate, 2.5 in SFF, MLC, Enterprise, SC	691027-001	Mandatory [2]

Item	Description	Spare PartNumber	CustomerSelf Repair
20m	400GB hot-plug SSD - SAS interface, 6 Gb/s transfer rate, 2.5 in SFF, MLC, Enterprise Mainstream, SC	691026-001	Mandatory [2]
20n	200GB hot-plug SSD - SAS interface, 6 Gb/s transfer rate, 2.5 in SFF, MLC, Enterprise Mainstream, SC	691025-001	Mandatory [2]
	FlexibleLOM		
21	FlexibleLOM Ethernet 1Gb 4-port 331FLR adapter - Has four 10/100/1000 BASE-T RJ45 ports - Requires one x4 (Gen 2) PCI Express slot (mechanically compatible with x8 and x16 PCI Express slots)	789897-001	Optional [1]
22	FlexibleLOM Ethernet 10Gb 2-port 530FLR adapter - Has two Small Form-factor Pluggable Plus (SFP+) ports and 256MB integrated buffer memory [3]	649869-001	Optional [1]
23	Hot-pluggable fan module assembly (Includes the locking latch)	735513-001	Mandatory [2]
	Options		
24	**Cache module** [3]		
24a	1GB flash backed write cache (FBWC) memory module, 72-bit wide - Does not include the controller board or capacitor module - For use with the P420 and P421 Smart Array controllers	633542-001	Optional [1]
24b	2GB FBWC memory module, 72-bit wide - Does not include the controller board or capacitor modul	633543-001	Optional [1]

Item	Description	Spare PartNumber	CustomerSelf Repair
	e - For use with the P420 , P421, P430, P431, and 822 Smart Array controll ers		
24c	4GB FBWC memory mod ule, 72-bit wide - Does n ot include the controller board or capacitor modul e - For use with the P420 , P421, P430, P431, 822, and 830 Smart Array con trollers	729639-001	Optional [1]
25	Capacitor pack with 914 mm (36 in) long cable - Provides back up power to the flash-based write cache (FBWC) memory m odule for up to 80 secon ds in the event of a syste m power failure - For use with Smart Array controll ers	660093-001	Optional [1]
26	Trusted platform module [3]	450168-001	No [4]
	Cables		
27	**Cable kit** [3]	735515-001	Mandatory [2]
27a	USB/Video cable		
27b	6-position power cable		
27c	10-position power cable		
27d	12-position power cable		
27e	Power/UID cable		
27f	Mini-SAS cable (I/O board)		
27g	Mini-SAS cable (SPI board to top SASbackplane)		
27h	Fan power cable		
27i	Discovery services cable		

Item	Description	Spare PartNumber	CustomerSelf Repair
27j	Miscellaneous		
28	Battery for real-time clock (RTC) - 3.0 V, 220 mAh, lithium coin cell, 20 mm diameter, 3.2 mm height (CR2032)[3]	319603-001	Mandatory[2]
29	Battery pack NiMH 4.3 V 24 in (To be used with the 4GB FBWC - option part number 698537-B21 and spare part number 729639-001)	731125-001	Optional[1]

NOTE:

1. Optional - Parts for which customer self repair is optional. These parts are also designed for customer self repair. If, however, you require that HPE replace them for you, there may or may not be additional charges, depending on the type of warranty service designated for your product.

2. Mandatory - Parts for which customer self repair is mandatory. If you request HPE to replace these parts, you will becharged for the travel and labor costs of this service.

3. Not shown

4. No - Some HPE parts are not designed for customer self repair. In order to satisfy the customer warranty, HP requires that an authorized service provider replace the part. These parts are identified as "No" in the Illustrated Parts Catalog.

Product related documents

Click here to view the list of product related documents.

Option Parts

Subtopics

New model specific parts lists

Processor
Memory
Optical drives
Factory Settings
Hard drives
Networking
Power supplies
HPE Graphic options
Auxiliary power cables
Insight software
Converged infrastructure management software
I/O accelerator options
Storage controllers
Secure encryption
Power cords
Tape backup
Tape storage systems
Disk backup
Disk storage systems
Storage options
Uninterruptible power systems
Basic Power Distribution Units (PDU)
Remote Monitoring Power Distribution Units (mPDU)
Intelligent Power Distribution Units (iPDU)
Rack options
USB and SD options
Care pack services
Product related documents

New model specific parts lists

IMPORTANT: To obtain current part number information for a specific product model, use the Standard Models page for this product family.

.

- The product Standard Models page now links the model SKU numbers to the spare parts list for each model found on the HPE PartSurfer web site. (To report missing or incorrect parts information in PartSurfer, please use the "Contact us" and "Missing or incorrect data" links within the PartSurfer web site utility).

- To look up RoHS-compliant information in PartSurfer, use the component's option part number or the sales order number for a system in which the component is used (available in the QuickSpecs or Standard Models page).

Processor

Description	Option Part#
Fifteen-core processors	
HPE DL580 Gen8 Intel Xeon E7-4890v2 (2.8 GHz/15-core/37.5MB/155 W) Processor Kit	728955-B21
HPE DL580 Gen8 Intel Xeon E7-4880v2 (2.5 GHz/15-core/37.5MB/130 W) Processor Kit	728957-B21
HPE DL580 Gen8 Intel Xeon E7-4870v2 (2.3 GHz/15-core/30MB/130 W) Processor Kit	728959-B21
HPE DL580 Gen8 Intel Xeon E7-8880Lv2 (2.2 GHz/15-core/37.5MB/105 W) Processor Kit	728953-B21
Twelve-core processors	
HPE DL580 Gen8 Intel Xeon E7-4860v2 (2.6 GHz/12-core/30MB/130 W) Processor Kit	728963-B21
HPE DL580 Gen8 Intel Xeon E7-4850v2 (2.3 GHz/12-core/24MB/105 W) Processor Kit	728965-B21
HPE DL580 Gen8 Intel Xeon E7-8857v2 (3.0 GHz/12-core/30MB/130 W) Processor Kit	728961-B21
HPE DL580 Gen8 Intel Xeon E7-8891v2 (3.2 GHz/10-core/37.5MB/155 W) Processor Kit	728967-B21
Eight-core processors	
HPE DL580 Gen8 Intel Xeon E7-4830v2 (2.2 GHz/10-core/20MB/105 W) Processor Kit	728969-B21
HPE DL580 Gen8 Intel Xeon E7-4820v2 (2.0 GHz/8-core/16MB/105 W) Processor Kit	728971-B21

Description	Option Part#
Six-core processors	
HPE DL580 Gen8 Intel Xeon E7-4809v2 (1.9 GHz/6-core/12MB/105 W) Processor Kit	728975-B21
HPE DL580 Gen8 Intel Xeon E7-8893v2 (3.4 GHz/6-core/37.5MB/155 W) Processor Kit	728973-B21

Memory

Description	Option Part#
Registered DIMMs (RDIMMs)	
HPE 4GB (1 x 4GB) Single Rank x4 PC3L-12800R (DDR3-1600) Registered CAS-11 Low Voltage Memory Kit	713981-B21
HPE 16GB (1 x 16GB) Dual Rank x4 PC3L-12800R (DDR3-1600) Registered CAS-11 Low Voltage Memory Kit	713985-B21
HPE 4GB (1 x 4GB) Single Rank x4 PC3-14900R (DDR3-1866) Registered CAS-13 Memory Kit	708637-B21
HPE 8GB (1 x 8GB) Single Rank x4 PC3L-12800R (DDR3-1600) Registered CAS-11 Low Voltage Memory Kit	731765-B21
HPE 8GB (1 x 8GB) Single Rank x4 PC3-14900R (DDR3-1866) Registered CAS-13 Memory Kit	731761-B21
HPE 16GB (1 x 16GB) Dual Rank x4 PC3-14900R (DDR3-1866) Registered CAS-13 Memory Kit	708641-B21
HPE 32GB (1 x 32GB) Quad Rank x4 PC3-14900L (DDR3-1866) Load Reduced CAS-13 Memory Kit	708643-B21
HPE 64GB (1x64GB) Octa Rank x4 PC3-12800L (DDR3-1600) Load Reduced CAS-11 Memory Kit	700838-B21
Memory expansion options [1]	

Description	Option Part#
HPE DL580 Gen8 12 DIMM Slots Memory Cartridge	732411-B21

NOTE:

HPE memory from previous generation servers are not qualified or warranted with this HP ProLiant Server. HP SmartMemory is required to realize the memory performance improvem ents and enhanced functionality listed in this document for Gen8. For additional informatio n, **Click here to access the HPE SmartMemory QuickSpecs**.

1. Up to Eight (8) memory cartridges are supported for 96 DIMM slots. A minimum of two memory cartridges are required (one per processor). A minimum of two memory DIMMs are required per cartridge (minimum of four DIMMs per server).

Optical drives

Description	Option Part#
HPE mobile USB non leaded system DVD RW drive	701498-B21

Factory Settings

Description	Option Part#
HPE Lockstep Memory Mode FIO Setting	773559-B21

Hard drives

Description	Option Part#
12G SAS Hot Plug with SmartDrive SFF (2.5-inch) Enterprise Drives	

Description	Option Part#
HPE 600GB SAS 12G Enterprise 15K SFF (2.5in) SC 3yr Wty HDD	759212-B21
HPE 450GB SAS 12G Enterprise 15K SFF (2.5in) SC 3yr Wty HDD	759210-B21
HPE 300GB SAS 12G Enterprise 15K SFF (2.5in) SC 3yr Wty HDD	759208-B21
12G SAS Hot Plug with SmartDrive SFF (2.5-inch) Enterprise Drives	
HPE 1.2TB SAS 12G Enterprise 10K SFF (2.5in) SC 3yr Wty HDD	781518-B21
HPE 900GB SAS 12G Enterprise 10K SFF (2.5in) SC 3yr Wty HDD	785069-B21
HPE 600GB SAS 12G Enterprise 10K SFF (2.5in) S C 3yr Wty HDD	781516-B21
HPE 300GB SAS 12G Enterprise 10K SFF (2.5in) SC 3yr Wty HDD	785067-B21
12G SAS Hot Plug SFF (2.5-inch) SC HDD	
HPE 1.8TB SAS 12G Enterprise 10K SFF (2.5in) SC 3yr Wty 512e HDD	791034-B21
12G SAS Hot Plug SFF (2.5-inch) SC SSD	
HPE 1.92TB SAS 12G Read Intensive SFF (2.5in) SC 3yr Wty SSD	802891-B21
HPE 800GB SAS 12G Write Intensive SFF (2.5in) SC 3yr Wty SSD	802586-B21
HPE 400GB SAS 12G Write Intensive SFF (2.5in) SC 3yr Wty SSD	802582-B21
HPE 200GB SAS 12G Write Intensive SFF (2.5in) SC 3yr Wty SSD	802578-B21
12G SAS SFF (2.5in) RI-3 SC Solid State Drives	
HPE 3.84TB SAS 12G Read Intensive SFF (2.5in) SC 3yr Wty SSD	816576-B21
HPE 1.92TB SAS 12G Read Intensive SFF (2.5in) SC 3yr Wty SSD	816572-B21
HPE 960GB SAS 12G Read Intensive SFF (2.5in) SC 3yr Wty SSD	816568-B21
HPE 480GB SAS 12G Read Intensive SFF (2.5in) SC 3yr Wty SSD	816562-B21
12G SAS SFF (2.5in) MU-3 SC Solid State Drives	

Description	Option Part#
HPE 3.2TB SAS 12G Mixed Use SFF (2.5in) SC 3yr Wty SSD	822567-B21
HPE 1.6TB SAS 12G Mixed Use SFF (2.5in) SC 3yr Wty SSD	822563-B21
HPE 800GB SAS 12G Mixed Use SFF (2.5in) SC 3yr Wty SSD	822559-B21
HPE 400GB SAS 12G Mixed Use SFF (2.5in) SC 3yr Wty SSD	822555-B21
12G SAS Hot Plug SFF (2.5-inch) SC HDD	
HPE 2TB SAS 12G Midline 7.2K SFF (2.5in) SC 1yr Wty 512e HDD	765466-B21
HPE 1TB SAS 12G Midline 7.2K SFF (2.5in) SC 1yr Wty 512e Digitally Signed Firmware HDD	765464-B21
HPE 600GB SAS 12G Enterprise 15K SFF (2.5in) SC 3yr Wty 512e HDD	748387-B21
SAS hot plug with SmartDrive SFF (2.5-in) enterprise drives [1]	
HPE 1.2TB 6G SAS 10K rpm SFF (2.5-in) SC Dual Port Enterprise 3 yr warranty hard drive	718162-B21
HPE 900GB 6G SAS 10K rpm SFF (2.5-in) SC Enterprise 3 yr warranty hard drive	652589-B21
HPE 600GB 6G SAS 10K rpm SFF (2.5-in) SC Enterprise 3 yr warranty hard drive	652583-B21
HPE 450GB 6G SAS 10K rpm SFF (2.5-in) SC Enterprise 3 yr warranty hard drive	652572-B21
HPE 300GB 6G SAS 10K rpm SFF (2.5-in) SC Enterprise 3 yr warranty hard drive	652564-B21
HPE 300GB 6G SAS 15K rpm SFF (2.5-in) SC Enterprise 3 yr warranty hard drive	652611-B21
HPE 146GB 6G SAS 15K rpm SFF (2.5-in) SC Enterprise 3 yr warranty hard drive	652605-B21
SAS hot plug SmartDrive SFF (2.5 in) midline Drives [1]	
HPE 1TB 6G SAS 7.2K rpm SFF (2.5-in) SC Midline 1 yr warranty hard drive	652749-B21

Description	Option Part#
HPE 500GB 6G SAS 7.2K rpm SFF (2.5-in) SC Midline 1 yr warranty hard drive	652745-B21
6G SAS ME Hot Plug SFF (2.5-inch) Enterprise Mainstream H2 Solid State Drives	
HPE 200GB SAS 12G Write Intensive SFF (2.5in) SC 3yr Wty SSD	779164-B21
HPE 400GB SAS 12G Write Intensive SFF (2.5in) SC 3yr Wty SSD	779168-B21
HPE 800GB SAS 12G Write Intensive SFF (2.5in) SC 3yr Wty SSD	779172-B21
HPE 1.6TB SAS 12G Write Intensive SFF (2.5in) SC 3yr Wty SSD	779176-B21
12G SAS SFF (2.5-in) MDL SC HDD	
HPE 1TB SAS 12G Midline 7.2K SFF (2.5in) SC 1yr Wty Digitally Signed Firmware HDD	832514-B21
6G SATA 2.5in WI-PLP SC Solid State Drives	
HPE 1.2TB SATA 6G Write Intensive SFF (2.5in) SC 3yr Wty SSD	804677-B21
HPE 800GB SATA 6G Write Intensive SFF (2.5in) SC 3yr Wty SSD	804671-B21
HPE 400GB SATA 6G Write Intensive SFF (2.5in) SC 3yr Wty SSD	804665-B21
HPE 200GB SATA 6G Write Intensive SFF (2.5in) SC 3yr Wty SSD	804639-B21
6G SATA 2.5in MU-PLP SC Solid State Drives	
HPE 1.6TB SATA 6G Mixed Use SFF (2.5in) SC 3yr Wty SSD	804631-B21
HPE 800GB SATA 6G Mixed Use SFF (2.5in) SC 3yr Wty SSD	804625-B21
HPE 480GB SATA 6G Mixed Use SFF (2.5in) SC 3yr Wty SSD	832414-B21
HPE 200GB SATA 6G Mixed Use SFF (2.5in) SC 3yr Wty SSD	804613-B21
6G SATA 2.5in RI-PLP SC Solid State Drives	
HPE 1.6TB SATA 6G Read Intensive SFF (2.5in) SC 3yr Wty SSD	804605-B21
HPE 800GB SATA 6G Read Intensive SFF (2.5in) SC 3yr Wty SSD	804599-B21

Description	Option Part#
HPE 480GB SATA 6G Read Intensive SFF (2.5in) SC 3yr Wty SSD	804593-B21
HPE 240GB SATA 6G Read Intensive SFF (2.5in) SC 3yr Wty SSD	804587-B21
HPE 120GB SATA 6G Read Intensive SFF (2.5in) SC 3yr Wty SSD	804581-B21
HPE 80GB SATA 6G Read Intensive SFF (2.5in) SC 3 yr Wty SSD	804575-B21
6G SATA Hot Plug SFF (2.5-inch) SC HDD	
HPE 2TB SATA 6G Midline 7.2K SFF (2.5in) SC 1yr Wty 512e Digitally Signed Firmware HDD	765455-B21
HPE 1TB SATA 6G Midline 7.2K SFF (2.5in) SC 1yr Wty 512e Digitally Signed Firmware HDD	765453-B21
6G SATA Hot Plug SFF (2.5-inch) RI SC Solid State Drives	
HPE 480GB 6G SATA Read Intensive SFF 2.5-in SC 3 yr Wty Solid State Drive	789145-B21
6G SATA value endurance hot plug SFF (2.5 in) enterprise boot solid state drives [2]	
HPE 120GB 6G SATA Value Endurance SFF 2.5-in S C Enterprise Boot 3 yr warranty Solid State Drive	717965-B21
HPE 80GB 6G SATA Value Endurance SFF 2.5-in SC Enterprise Boot 3 yr warranty Solid State Drive	734360-B21
6G SATA value endurance hot plug SFF (2.5 in) enterprise value solid state drives [2]	
HPE 800GB 6G SATA Value Endurance SFF 2.5-in S C Enterprise Value 3 yr warranty Solid State Drive	717973-B21
HPE 480GB 6G SATA Value Endurance SFF 2.5-in S C Enterprise Value 3 yr warranty Solid State Drive	717971-B21
HPE 600GB 6G SATA Value Endurance SFF 2.5-in S C Enterprise Value 3 yr warranty Solid State Drive	739898-B21
HPE 300GB 6G SATA Value Endurance SFF 2.5-in S C Enterprise Value 3 yr warranty Solid State Drive	739888-B21
HPE 240GB 6G SATA Value Endurance SFF 2.5-in S C Enterprise Value 3 yr warranty Solid State Drive	717969-B21
6G SATA Hot Plug SFF (2.5-inch) SC Midline HDD	

Description	Option Part#
HPE 1TB SATA 6G Midline 7.2K SFF (2.5in) SC 1yr Wty Digitally Signed Firmware HDD	655710-B21
HPE 500GB 6G SATA 7.2K rpm SFF (2.5-inch) SC Midline 1yr Warranty Hard Drive	655708-B21
6G SATA Value Endurance Hot Plug SFF (2.5-inch) SC Enterprise Value M1 SSD	
HPE 120GB SATA 6G Read Intensive SFF (2.5in) SC 3yr Wty SSD	764923-B21
HPE 240GB SATA 6G Read Intensive SFF (2.5in) SC 3yr Wty SSD	764925-B21
HPE 480GB SATA 6G Read Intensive SFF (2.5in) SC 3yr Wty SSD	764927-B21
HPE 800GB SATA 6G Read Intensive SFF (2.5in) SC 3yr Wty SSD	764929-B21
6G SATA Value Endurance Hot Plug SFF (2.5-inch) SC Enterprise Value G1 SSD	
HPE 480GB 6G SATA Value Endurance SFF 2.5-in SC Enterprise Value 3yr Wty G1 Solid State Drive	756657-B21
6G SATA Hot Plug RI-3 SFF (2.5-inch) SC Solid State Drives	
HPE 3.84TB SATA 6G Read Intensive SFF (2.5in) SC 3yr Wty SSD	816929-B21
HPE 1.92TB SATA 6G Read Intensive SFF (2.5in) SC 3yr Wty SSD	816919-B21
HPE 960GB SATA 6G Read Intensive SFF (2.5in) SC 3yr Wty SSD	816909-B21
HPE 480GB SATA 6G Read Intensive SFF (2.5in) SC 3yr Wty SSD	816899-B21
HPE 240GB SATA 6G Read Intensive SFF (2.5in) SC 3yr Wty SSD	816889-B21
HPE 120GB SATA 6G Read Intensive SFF (2.5in) SC 3yr Wty SSD	816879-B21
6G SATA Hot Plug MU-3 SFF (2.5-inch) SC Solid State Drives	
HPE 1.92TB SATA 6G Mixed Use SFF (2.5in) SC 3yr Wty SSD	817011-B21
HPE 960GB SATA 6G Mixed Use SFF (2.5in) SC 3yr Wty SSD	816995-B21
HPE 480GB SATA 6G Mixed Use SFF (2.5in) SC 3yr Wty SSD	816985-B21
HPE 240GB SATA 6G Mixed Use SFF (2.5in) SC 3yr Wty SSD	816975-B21

Description	Option Part#
HPE 120GB SATA 6G Mixed Use SFF (2.5in) SC 3yr Wty SSD	816965-B21
6G SATA ME hot plug SFF (2.5 in) enterprise mainstream solid state drives [2]	
HPE 800GB 6G SATA Mainstream Endurance SFF 2 .5-in SC Enterprise Mainstream 3 yr warranty Solid State Drive	691868-B21
HPE 400GB 6G SATA Mainstream Endurance SFF 2 .5-in SC Enterprise Mainstream 3 yr warranty Solid State Drive	691866-B21
HPE 200GB 6G SATA Mainstream Endurance SFF 2 .5-in SC Enterprise Mainstream 3 yr warranty Solid State Drive	691864-B21
HPE 100GB 6G SATA Mainstream Endurance SFF 2 .5-in SC Enterprise Mainstream 3 yr warranty Solid State Drive	691862-B21
12G SAS enterprise performance and mainstream solid state drives [2]	
HPE 800GB 12G SAS High Endurance SFF 2.5-in SC Enterprise Performance 3 yr warranty Solid State Drive	741159-B21
HPE 400GB 12G SAS High Endurance SFF 2.5-in SC Enterprise Performance 3 yr warranty Solid State Drive	741155-B21
HPE 200GB 12G SAS High Endurance SFF 2.5-in SC Enterprise Performance 3 yr warranty Solid State Drive	741151-B21
HPE 800GB 12G SAS Mainstream Endurance SFF 2 .5-in SC Enterprise Mainstream 3 yr warranty Solid State Drive	741146-B21
HPE 400GB 12G SAS Mainstream Endurance SFF 2 .5-in SC Enterprise Mainstream 3 yr warranty Solid State Drive	741142-B21
HPE 200GB 12G SAS Mainstream Endurance SFF 2 .5-in SC Enterprise Mainstream 3 yr warranty Solid State Drive	741138-B21
6G SAS ME hot plug SFF (2.5 in) enterprise mainstream solid state drives [2]	

Description	Option Part#
HPE 800GB 6G SAS Mainstream Endurance SFF 2.5-in SC Enterprise Mainstream 3 yr warranty Solid State Drive	690829-B21
HPE 400GB 6G SAS Mainstream Endurance SFF 2.5-in SC Enterprise Mainstream 3 yr warranty Solid State Drive	690827-B21
HPE 200GB 6G SAS Mainstream Endurance SFF 2.5-in SC Enterprise Mainstream 3 yr warranty Solid State Drive	690825-B21
Hard drive option kits	
HPE 1.6TB 12G SAS Value Endurance SFF 2.5-in SC Enterprise Value 3yr Wty Solid State Drive	762263-B21
HPE 800GB SAS 12G Read Intensive SFF (2.5in) SC 3yr Wty SSD	762261-B21
HPE ProLiant DL580 Gen8 5 Small Form Factor Drive Backplane Cage Kit	739405-B21
HPE SFF Gen8 Hard Drive Blank Kit	666987-B21
HPE DL580 Gen8 SAS Cable Kit [3]	748916-B21
HPE Smart Array P830/4GB FBWC 6Gb 2-ports Int SAS Controller	698533-B21
HPE Smart Array P430/4GB FBWC 6Gb 1-port Int SAS Controller	698530-B21
HPE Smart Array P430/2GB FBWC 6Gb 1-port Int SAS Controller	698529-B21

NOTE:

The components of a storage subsystem (e.g. the drive, the HBA/controller, firmware, and the server backplane) should operate at the same data transfer rate or the system bandwidth will be negotiated down to an acceptable level for all components. Hard drives have either a one year or three year warranty; refer to the specific hard drive QuickSpecs for details.

1. **Click here to see the QuickSpecs for Technical Specifications and additional information about the SSD available**https://www.hpe.com/h20195/v2/gethtml.aspx?docname=c04282664

Description	Option Part#

2. This cable is required when ordering one of these Smart Array Controllers for a PCIe slot.

Networking

Description	Option Part#
Gigabit Ethernet Adapters	
HPE Ethernet 1Gb 4-port 331T Adapter	647594-B21
10 Gigabit Ethernet Adapters [1]	
HPE Ethernet 10Gb 2P 530SFP+ Adapter	652503-B21
HPE Ethernet 10Gb 2P 560SFP+ Adapter	665249-B21
HPE Ethernet 10Gb 2-port 530T Adapter	656596-B21
HPE Converged Network Adapters	
HPE StoreFabric CN1100R Dual Port Converged Network Adapter	QW990A
HPE StoreFabric CN1200E 10Gb Converged Network Adapter	E7Y06A
FlexibleLOM Adapters	
HPE Ethernet 10Gb 2-port 561T Adapter	716591-B21
HPE Ethernet 1Gb 4-port 331FLR Adapter	629135-B21
HPE Ethernet 1Gb 4-port 366FLR Adapter	665240-B21
HPE Ethernet 10Gb 2-port 546SFP+ Adapter	779793-B21
HPE Ethernet 10Gb 2-port 546FLR-SFP+ Adapter	779799-B21
HPE Ethernet 10Gb 2-port 557SFP+ Adapter	788995-B21
HPE FlexFabric 10Gb 2-port 534FLR-SFP+ Adapter	700751-B21
HPE Ethernet 10Gb 2-port 560FLR-SFP+ Adapter	665243-B21

Description	Option Part#
HPE InfiniBand FDR/Ethernet 10Gb/40Gb 2-port 544+QSFP Adapter	764284-B21
HPE InfiniBand QDR/Ethernet 10Gb 2-port 544+FLR-QSFP Adapter	764286-B21
HPE InfiniBand FDR/Ethernet 10Gb/40Gb 2-port 544+FLR-QSFP Adapter	764285-B21
HPE InfiniBand FDR 2-port 545QSFP Adapter	702211-B21

NOTE:

1. A minimum of two Gigabytes (2GB) of server memory is required per each adapter.

Both Legacy BIOS and UEFI BIOS mode are supported.

Power supplies

Description	Option Part#
HPE Common slot platinum plus power supply kits	
HPE 1500 W Common Slot Platinum Plus Hot Plug Power Supply Kit	684532-B21
HPE 1200 W Common Slot Platinum Plus Hot Plug Power Supply Kit	656364-B21

NOTE:

Prior to making a power supply selection it is highly recommended that the HP Power Advisor is run to determine the right size power supply for your server configuration.**Click here to access the HPE Power Advisor available**.

94% efficiency with support for HP Power Discovery Services.

All power supplies in a server should match. Mixing Power Supplies is not supported.

Option Kits contain specified power supply and PDU IEC cable.

1500 W Power Supplies only support High Line Voltage.

HPE Graphic options

Part Description	Option Part Number
NVIDIA Quadro K6000 PCI-E Graphics Adapter	730874-B21
NVIDIA Tesla K40C 12GB Computational Accelerator	753960-B21
NVIDIA GRID K2 Reverse Air Flow Dual GPU PCIe G raphics Accelerator	753958-B21

NOTE:

1. The adapter kit is used to provide power to high-wattage cards (example: graphics cards) that require up to 225W of power. High wattage cards are supported on the x16 FL/FH slot which is controlled by the second processor. p/n 661628-b21 is required. Because of a singl e x16 FL/FH slot, we support only one of the below graphic cards at a time.

2. Only the following OS types are supported: 64-bit Only: Red Hat Enterprise Linux 5.x, Re d Hat Enterprise Linux 6.x, SUSE Linux Enterprise Server 11 SPx. 64-bit Only: Windows Ser ver 2008 R2 SPx.

3. Only the following OS types are supported: 64-bit Only: Red Hat Enterprise Linux 5.x, Re d Hat Enterprise Linux 6.x, SUSE Linux Enterprise Server 11 SPx. 64-bit Only: Windows Ser ver 2008 R2 SPx.

Auxiliary power cables

Description	Option Part#
HPE DL580/DL585/DL980 power cable kit	631660-B21

NOTE:

Order with HPE IO Accelerator Duo cards or GP GPUs for providing additional power to the IO cards.

Insight software

Description	Option Part#
HPE Insight control [1]	
HPE Insight Control including 1 yr 24x7 Technical Support and Updates Single Server License	C6N27A
HPE Insight Control Server Provisioning Media Kit	BD883A
HPE Insight Management Media Kit	C6N31A
HPE Insight Control including 1yr 24x7 TSU E-LTU	C6N28ABE
HPE Insight Control Server Deployment including 1 yr 24x7 Support Electronic License	T9082AAE
HPE Insight Control Server Deployment including 1 yr 24x7 Support Single Server License	452151-B21
HPE Integrated Lights-Out (iLO) advanced for ProLiant	
HPE iLO Advanced including 1 yr 24x7 Technical Support and Updates Electronic License [2]	E6U59ABE
HPE iLO Advanced including 3 yr 24x7 Tech Support and Updates Electronic License [2]	E6U64ABE
HPE iLO Advanced including 1 yr 24x7 Technical Support and Updates Single Server License	512485-B21
HPE iLO Advanced 1 Server License with 3 yr 24x7 Tech Support and Updates	BD505A

NOTE:

1. Electronic and Flexible-Quantity licenses can be used to purchase multiple licenses with a single activation key.

Customer will receive a license entitlement certificate. The license entitlement certificate must be redeemed online or via fax in order to obtain the license activation key(s). Includes one year of 24 x 7 HP Software Technical Support and Update Service.

Licenses ship without media. The HP Insight Control Media Kit can be ordered separately, or can be downloaded. **Click here to download available**.

2. The Electronic software license is available in EMEA only.

Description	Option Part#

Click here for more information available.

Converged infrastructure management software

Description	Option Part#
HPE OneView	
HPE OneView Media Kit Phys No Lic	E5Y37A
HPE OneView incl 3 yr 24x7 Supp Phys 1 Svr Lic	E5Y34A
HPE OneView incl 3 yr 24x7 Supp Flex Qty E-LTU	E5Y35AAE
HPE Operations Analytics for HPE OneView LTU	K8G29A
HPE Operations Analytics for HPE OneView E-LTU	K8G29AAE
HPE OneView without iLO Advanced	
HPE OneView w/o iLO including 3yr 24x7 Support 1 -server LTU	P8B24A
HPE OneView w/o iLO including 3yr 24x7 Support Fl exible Quantity E-LTU	P8B26AAE
HPE OneView w/o iLO including 3yr 24x7 Support 1 -server FIO LTU	P8B31A
HPE OneView without iLO advanced	
HPE OneView w/o iLO Adv incl 3 yr 24x7 Supp Phys 1 Svr Lic	E5Y38A
HPE OneView w/o iLO Adv inc 3 yr 24x7 Supp Flex Qty E-LTU	E5Y39AAE

NOTE:

OneView is supported in Legacy BIOS mode only.

I/O accelerator options

Description	Option Part#
Second generation accelerators	
HPE 1.3TB HH/HL Value Endurance (VE) PCIe Workload Accelerator	763834-B21
HPE 1.6TB HH/HL Value Endurance (VE) PCIe Workload Accelerator	763836-B21
HPE 3.2TB HH/HL Value Endurance (VE) PCIe Workload Accelerator	763838-B21
HPE 6.4TB FH/HL Value Endurance (VE) PCIe Workload Accelerator	763840-B21
HPE 1.0TB HH/HL Light Endurance (LE) PCIe Workload Accelerator	775666-B21
HPE 1.3TB HH/HL Light Endurance (LE) PCIe Workload Accelerator	775668-B21
HPE 2.6TB HH/HL Light Endurance (LE) PCIe Workload Accelerator	775670-B21
HPE 5.2TB FH/HL Light Endurance (LE) PCIe Workload Accelerator	775672-B21
HPE 1.3TB Read Intensive-2 HH/HL PCIe Workload Accelerator	831733-B21
HPE 1.6TB Read Intensive-2 HH/HL PCIe Workload Accelerator	831735-B21
HPE 3.2TB Read Intensive-2 HH/HL PCIe Workload Accelerator	831737-B21
HPE 6.4TB Read Intensive-2 FH/HL PCIe Workload Accelerator	831739-B21
HPE 365GB Multi Level Cell G2 PCIe ioDrive2 for ProLiant Servers	673642-B21
HPE 785GB Multi Level Cell G2 PCIe ioDrive2 for ProLiant Servers	673644-B21
HPE 1205GB Multi Level Cell G2 PCIe ioDrive2 for ProLiant Servers	673646-B21
HPE 2410GB Multi Level Cell G2 PCIe ioDrive2 Duo for ProLiant Servers	673648-B21

Description	Option Part#
HPE 3TB G2 FH/HL PCIe ioDrive2 IO Accelerator for ProLiant Servers	721458-B21

Storage controllers

Description	Option Part#
SAS controllers	
Smart array P430 controller	
HPE Smart Array P430/2GB FBWC 12Gb 1-port Int SAS Controller	698529-B21
HPE Smart Array P430/4GB FBWC 12Gb 1-port Int SAS Controller	698530-B21
Smart array P431 controller	
HPE Smart Array P431/2GB FBWC 12Gb 2-ports Ext SAS Controller	698531-B21
HPE Smart Array P431/4GB FBWC 12Gb 2-ports Ext SAS Controller	698532-B21
Smart array P830 controller	
HPE Smart Array P830/4GB FBWC 12Gb 2-ports Int SAS Controller	698533-B21
Optional upgrades	
HPE 4GB P-series Smart Array Flash Backed Write Cache FIO Kit	698537-B21
HPE Smart Array 2GB FIO Flash Backed Write Cache	758836-B21
HPE Secure Encryption per Svr Entitlement	C9A82AAE
HPE SmartCache No Media 24x7 Technical Support 1 Svr License	D7S26A

Description	Option Part#
HPE SmartCache No Media 24x7 Technical Support Flexible License	D7S27A
HPE SmartCache No Media 24x7 Technical Support Electronic License	D7S27AAE

Secure encryption

Description	Option Part#
HPE Secure Encryption No Media E-LTU per Drive	D8S85AAE
HPE Secure Encryption No Media Flexible License per Drive	D8S84A



NOTE:

HPE Secure Encryption is supported on the HP Smart Array P830, P430 and P431 as an o ption. HP Secure Encryption licensing is based on the number of physical drives requiring e ncryption.

Click here for more information about HP Secure Encryption availableat www.hp.com/g o/hpsecureencryption

Power cords

Description	Option Part#
HPE C13 - SEV 1011 CH 250 V 10 Amp 1.83 m Po wer Cord	AF565A
HPE C13 - DK-2.5A DK 250 V 10 Amp 1.83 m Powe r Cord	AF566A

Description	Option Part#
HPE C13 - SABS-164 ZA 250 V 10Amp 2.5 m Power Cord	AF567A
HPE C13 - CEE-VII EU 250 V 10 Amp 1.83 m Power Cord	AF568A
HPE C13 - BS-1363A UK/HK/SG 250 V 10 Amp 1.83 m Power Cord	AF570A
HPE C13 - CEI-23-50 IT/CL 250V 10 Amp 1.83 m Power Cord	AF571A

Tape backup

Description	Option Part#
HPE StoreEver LTO-6 Ultrium 6250 Tape Drive in 1U Rack-mount Kit	C0L99A
HPE StoreEver LTO-6 Ultrium 6650 SAS Internal Tape Drive	EH963A
HPE StoreEver LTO-6 Ultrium 6650 SAS External Tape Drive	EH964A
HPE StoreEver LTO-6 Ultrium 6250 Internal Tape Drive	EH969A
HPE StoreEver LTO-6 Ultrium 6250 External Tape Drive	EH970A
HPE StoreEver 1/8 G2 LTO-6 Ultrium 6250 FC Tape Autoloader	C0H19A

NOTE:

Click here for hardware and software compatibility of HP tape backup products available at http://www.hp.com/storage/SPOCK and **https://h20272.www2.hpe.com/spock/**.

Description	Option Part#

For Internal drives to be connected to DL servers please make sure that you order rack mou nt kit as well.

Tape storage systems

Description	Option Part#
HPE StoreEver MSL6480	
HPE StoreEver MSL6480 Scalable Base Module	QU625A

Disk backup

Description	Option Part#
HPE RDX320 USB3.0 External Disk Backup System	B7B63A
HPE RDX500 USB3.0 Internal Disk Backup System	B7B64A
HPE RDX500 USB3.0 External Disk Backup System	B7B66A
HPE RDX+ 500GB External Backup System	B7B66B
HPE RDX1000 USB3.0 Internal Disk Backup System	B7B67A
HPE RDX 2TB USB3.0 Internal Disk Backup System	E7X52A
HPE RDX+ External Docking System	C8S07B
HPE RDX1000 USB3.0 External Disk Backup System	B7B69A
HPE RDX+ 1TB External Backup System	B7B69B
HPE RDX 2TB USB3.0 External Disk Backup System	E7X53B

NOTE:

Description	Option Part#
Click here for hardware and software compatibility of HPE disk backup products available. For Internal drives to be connected to DL servers please make sure that you order rack mount kit as well.	

Disk storage systems

Description	Option Part#
Disk Enclosures	
HPE D2600 w/12 4TB 6G SAS 7.2K LFF Dual Port MDL HDD 48TB Bundle	E7W32A

Storage options

Description	Option Part#
Storage fibre channel Host Bus Adapter (HBA) [1]	
QLogic fibre channel HBAs	
HPE 81Q 8Gb 1-port PCIe Fibre Channel HBAs	AK344A
HPE 82Q 8Gb 2-port PCIe Fibre Channel HBA	AJ764A
HPE StoreFabric SN1000Q 16GB 1-port PCIe Fibre Channel HBA	QW971A
HPE StoreFabric SN1000Q 16GB 2-port PCIe Fibre Channel HBA	QW972A
Emulex Fibre Channel HBAs	

Description	Option Part#
HPE 81E 8Gb 1-port PCIe Fibre Channel Host Bus Adapter	AJ762B
HPE 82E 8Gb 2-port PCIe Fibre Channel Host Bus Adapter	AJ763B
HPE StoreFabric SN1100E 16Gb Single Port Fibre Channel Host Bus Adapter	C8R38A
HPE StoreFabric SN1100E 16Gb Dual Port Fibre Channel Host Bus Adapte	C8R39A

NOTE:

Only UEFI BIOS mode is supported.

Legacy mode and UEFI mode Secure Boot will supported post initial release.

Uninterruptible power systems

Description	Option Part#
HPE Rack-mountable UPS	
HPE R1500 G3 uninterruptible power supply (UPS) [1]	
HPE R1.5kVA G3 1U NA uninterruptible power system	AF469A
HPE R1.5kVA G3 1U JP/TW uninterruptible power system	AF470A
HPE R1.5kVA G3 1U INTL uninterruptible power system	AF471A
HPE R1500 Uninterruptible Power Supply (UPS)	
HPE R1500 G4 NA Uninterruptible Power System	J2Q99A
HPE R1500 G4 INTL Uninterruptible Power System	J2R03A
HPE R1500 G4 JP/TWN Uninterruptible Power System	J2R05A
HPE R/T2000 Uninterruptible Power System (UPS)	

Description	Option Part#
HPE R/T2200 G4 NA/JP Uninterruptible Power System	J2R00A
HPE R/T2200 G4 Extended Runtime Module	J2R09A
HPE 2U Rack/Tower UPS Shipping Kit	L4Q11A
HPE R/T3000 G2 UPS [2]	
HPE R/T3000 G2 2U L530 Low Voltage NA/JP UPS	AF466A
HPE R/T3000 G4 Low Voltage NA/JP Uninterruptible Power System	J2R01A
HPE R/T3000 G4 High Voltage NA/JP Uninterruptible Power System	J2R02A
HPE R/T3000 G4 High Voltage INTL Uninterruptible Power System	J2R04A
HPE R/T3000 G4 Extended Runtime Module	J2R10A
HPE R/T3000 G2 2U L620 High Voltage NA/JP Uninterruptible Power System	AF467A
HPE R/T3000 G2 2U Detachable Cord High Voltage INTL Uninterruptible Power System	AF468A
R5000 UPS [3]	
HPE R5KVA 3U IEC309-32A High Voltage INTL Uninterruptible Power System	AF461A
HPE R5KVA 3U L630 High Voltage NA/JP Uninterruptible Power System	AF460A
R7000 UPS [4]	
HPE R7KVA 4U 50A High Voltage NA/JP Uninterruptible Power System	AF462A
HPE R7KVA 4U IEC-32A High Voltage INTL Uninterruptible Power System	AF463A
HPE R5KVA and R7KVA 3U Extended Runtime Module	AF464A
HPE Rackmountable 3 Phase (UPS R8000/3 and R12000/3) [5]	
HPE R8000/3 8000kVA Three Phase NA 6U Rackmount Uninterruptible Power System	AF431A

Description	Option Part#
HPE R8000/3 8000kVA Three Phase INTL 6U Rack mount Uninterruptible Power System	AF432A
HPE R12000/3 12000VA Three Phase NA 6U Rack mount Uninterruptible Power System	AF429A
HPE R12000/3 12000VA Three Phase INTL 6U Rac kmount Uninterruptible Power System	AF430A

Basic Power Distribution Units (PDU)

Description	Option Part#
HPE Basic Power Distribution Unit: 1U/0U Version	
HPE 1.9kVA 120 V 12 Outlet NA/JP Basic Power Di stribution Unit	H5M54A
HPE 3.6kVA 200-240 V 12 Outlet WW Basic Power Distribution Unit	H5M56A
HPE Basic Power Distribution Unit: Half Height Version	
HPE 2.8kVA 120 V 18 Outlet NA/JP Basic Power Di stribution Unit	H5M55A
HPE 3.6kVA 200-240 V 20 Outlet WW Basic Power Distribution Unit	H5M57A
HPE 4.9kVA 208 V 20 Outlet NA/JP Basic Power Di stribution Unit	H5M58A
HPE 7.3kVA 230 V 20 Outlet INTL Basic Power Dist ribution Unit	H5M68A
HP 8.6kVA 208 V Three Phase 18 Outlet NA/JP Basi c Power Distribution Unit	H5M61A
HPE Basic Power Distribution Unit: Mid Height Version	
HPE 4.9kVA 208 V 30 Outlet NA/JP Basic Power Di stribution Unit	H5M59A

Description	Option Part#
HPE 7.3kVA 230 V 30 Outlet INTL Basic Power Distribution Unit	H5M70A
HPE 8.3kVA 208 V 36 Outlet NA/JP Basic Power Distribution Unit	H5M60A
HPE 11kVA 230 V 36 Outlet INTL Basic Power Distribution Unit	H5M71A
HPE Hard wired 200-240 V 36 Outlet WW Basic Power Distribution Unit	H5M75A
HPE 5.7kVA 208 V Three Phase 27 Outlet NA/JP Dual Vage Basic Power Distribution Unit	H5M63A
HPE 8.6kVA 208 V Three Phase 30 Outlet NA/JP Dual Vage Basic Power Distribution Unit	H5M64A
HPE 8.6kVA 208 V Three Phase 30 Outlet NA/JP Basic Power Distribution Unit	H5M62A
HPE 11kVA 400 V Three Phase 30 Outlet INTL Basic Power Distribution Unit	H5M72A
HPE Basic Power Distribution Unit: Full Height Version	
HPE 11kVA 400 V Three Phase 42 Outlet INTL Basic Power Distribution Unit	H5M73A
HPE 11kVA 400 V Three Phase 42 Outlet NA Basic Power Distribution Unit	H5M67A
HPE Basic Power Distribution Unit: 480/277 V Version	
HPE 13.2kVA 480 V Three Phase 15 Outlet NA Basic Power Distribution Unit	H3X07A
HPE 19.9kVA 480 V Three Phase 30 Outlet NA Basic Power Distribution Unit	H3X08A
HPE 800VA - 277 V Input / 230 V Output NA Rack Mount Transformer	H3X09A

Remote Monitoring Power Distribution Units (mPDU)

Description	Option Part#
HPE Remote Monitored Power Distribution Unit: 1U Version	
HPE 2.8kVA 120 V 12 Outlet NA/JP Monitored Power Distribution Unit	D9N43A
HPE 3.6kVA 200-240 V 12 Outlet WW Monitored Power Distribution Unit	D9N46A
HPE 4.9kVA 208 V 12 Outlet NA/JP Monitored Power Distribution Unit	D9N44A
HPE Remote Monitored Power Distribution Unit: Half Height Version	
HPE 3.6kVA 200-240 V 16 Outlet WW Monitored Power Distribution Unit	D9N45A
HP Remote Monitored Power Distribution Unit: Mid Height Version	
HPE 4.9kVA 208 V 24 Outlet NA/JP Monitored Power Distribution Unit	D9N47A
HPE 7.3kVA 230 V 24 Outlet INTL Monitored Power Distribution Unit	D9N48A
HPE 8.6kVA 208 V Three Phase 21 Outlet NA/JP Monitored Power Distribution Unit	D9N51A
HPE 5.7kVA 208 V Three Phase 21 Outlet NA/JP Dual Vage Monitored Power Distribution Unit	D9N52A
HPE 8.6kVA 208 V Three Phase 24 Outlet NA/JP Dual Vage Monitored Power Distribution Unit	D9N53A
HPE 11kVA 400 V Three Phase 21 Outlet INTL Monitored Power Distribution Unit	D9N55A
HPE Remote Monitored Power Distribution Unit: Full Height Version	
HPE 8.3kVA 208 V 33 Outlet NA Monitored Power Distribution Unit	D9N49A
HPE 7.3kVA 230 V 36 Outlet INTL Monitored Power Distribution Unit	D9N50A

Description	Option Part#
HPE 11kVA 400 V Three Phase 33 Outlet INTL Monitored Power Distribution Unit	D9N57A
HPE 14.4kVA 208 V Three Phase 24 Outlet NA Monitored Power Distribution Unit	D9N58A
HPE 16.6kVA 400 V Three Phase 33 Outlet NA Monitored Power Distribution Unit	D9N61A
HPE 17.3kVA 208 V Three Phase 27 Outlet NA/JP Monitored Power Distribution Unit	D9N54A
HPE 17.3kVA 208 V Three Phase 24 Outlet NA/JP Monitored Power Distribution Unit	D9N59A
HPE 22kVA 400 V Three Phase 24 Outlet INTL Monitored Power Distribution Unit	D9N60A
HPE 22kVA 400 V Three Phase 33 Outlet INTL Monitored Power Distribution Unit	D9N56A
HPE 16.6kVA 400 V Three Phase 24 Outlet NA Monitored Power Distribution Unit	D9N62A
HPE 19.9kVA 480 V Three Phase 30 Outlet NA Monitored Power Distribution Unit	D9N63A
HPE Environmental Sensor for Remote Monitored PDUs	
HPE Environmental Sensor for Remote Monitored PDUs	E2D53A

Intelligent Power Distribution Units (iPDU)

Description	Option Part#
iPDU Core Units	
HPE 4.9kVA 24A Single Phase NA/JP Core Intelligent Modular Power Distribution Unit (iPDU))	AF520A
HPE 8.3kVA 40A Single Phase NA/JP Core iPDU	AF521A

Description	Option Part#
HPE 8.6kVA 24A Three Phase NA/JP Core iPDU	AF522A
HP 14.4kVA 40A Three Phase NA/JP iPDU	AF533A
HPE 17.3kVA 48A Three Phase NA/JP Core iPDU	AF523A
HPE 7.3kVA 32A Single Phase INTL Core iPDU	AF525A
HPE 11kVA 16A Three Phase INTL Core iPDU	AF526A
HPE 22kVA 32A Three Phase INTL Core iPDU	AF527A
HPE 11.4kVA 16A 415 V Three Phase L22-20 NA Core Intelligent Power Distribution Unit	AF900A
HPE 17.3kVA 24A 415 V Three Phase L22-30 NA Core Intelligent Power Distribution Unit	AF902A
HPE 17.3kVA 24A 415 V Three Phase IEC309 NA Core Intelligent Power Distribution Unit	AF901A
HPE 17.3kVA 48A 208 V Three Phase 12 Outlet Core NA/JP Intelligent Power Distribution Unit	AF535A
HPE 17.3kVA 24A 415 V Three Phase 12 Outlet Core NA/JP Intelligent Power Distribution Unit	AF537A
HPE 22kVA 32A 400 V Three Phase 12 Outlet Core INTL Intelligent Power Distribution Unit	AF538A
iPDU Kits with Standard Extension Bars	
HPE 4.9kVA 24A Single Phase NA/JP Intelligent Modular Power Distribution Kit	AF531A
HPE 8.6kVA 24A Three Phase NA/JP Intelligent Modular Power Distribution Kit	AF532A
HPE 7.3kVA 32A Single Phase INTL Intelligent Modular Power Distribution Kit	AF534A
iPDU Extension Bars	
HPE 5xC13 Intelligent PDU Extension Bar G2 Kit	AF547A
HPE 5xC13 Outlets Power and UID LEDs Pair Standard Extension Bar	AF528A

Rack options

Description	Option Part#
HPE Location Discovery Services	
HPE 36U Location Discovery Kit	BW945A
HPE 42U Location Discovery Kit	BW946A
HP 47U Location Discovery Kit	BW947A
HPE TFT7600 G2 KVM Console and Monitor (TFT7600 G2) [1]	
HPE TFT7600 G2 KVM Console Rackmount Keyboard US Monitor	AZ870A
HPE TFT7600 G2 KVM Console Rackmount Keyboard UK Monitor	AZ871A
HPE TFT7600 G2 KVM Console Rackmount Keyboard DE Monitor	AZ872A
HPE TFT7600 G2 KVM Console Rackmount Keyboard FR Monitor	AZ873A
HPE TFT7600 G2 KVM Console Rackmount Keyboard IT Monitor	AZ874A
HPE TFT7600 G2 KVM Console Rackmount Keyboard ES Monitor	AZ875A
HPETFT7600 G2 KVM Console Rackmount Keyboard DK Monitor	AZ876A
HPE TFT7600 G2 KVM Console Rackmount Keyboard NO Monitor	AZ877A
HPE TFT7600 G2 KVM Console Rackmount Keyboard SE/FI Monitor	AZ878A
HPE TFT7600 G2 KVM Console Rackmount Keyboard CH Monitor	AZ879A

Description	Option Part#
HPE TFT7600 G2 KVM Console Rackmount Keyboard PT Monitor	AZ880A
HPE TFT7600 G2 KVM Console Rackmount Keyboard BE Monitor	AZ881A
HPE TFT7600 G2 KVM Console Rackmount Keyboard JP Monitor	AZ882A
HPE TFT7600 G2 KVM Console Rackmount Keyboard RU Monitor	AZ883A
HPE TFT7600 G2 KVM Console Rackmount Keyboard Intl Monitor	AZ884A
HPE TFT7600 G2 KVM Console Rackmount Keyboard US TAA Monitor	AZ885A
HPE USB Keyboard and Mouse [2]	
HPE USB BFR with PVC Free IN Keyboard/Mouse Kit	672097-D63
HPE USB US Keyboard/Mouse Kit	631341-B21
HPE USB UK Keyboard/Mouse Kit	631344-B21
HPE USB FR Keyboard/Mouse Kit	631346-B21
HPE USB ES Keyboard/Mouse Kit	631348-B21
HPE USB DE Keyboard/Mouse Kit	631358-B21
HPE USB JP Keyboard/Mouse Kit	631360-B21
HPE USB IT Keyboard/Mouse Kit	631362-B21
HPE USB CN Keyboard/Mouse Kit	631364-B21
HPE USB AE Keyboard/Mouse Kit	638212-B21
HPE USB RU Keyboard/Mouse Kit	638214-B21
HPE USB BFR with PVC Free AP-Intl Keyboard/Mouse Kit	672097-373
HPE USB BFR with PVC Free Intl Keyboard/Mouse Kit	672097-B33
HPE USB BFR with PVC Free PT Keyboard/Mouse Kit	672097-133
HPE USB BFR with PVC Free TR Keyboard/Mouse Kit	672097-143

Description	Option Part#
HPE USB BFR with PVC Free CZ Keyboard/Mouse Kit	672097-223
HPE USB BFR with PVC Free FI Keyboard/Mouse Kit	672097-353
HPE USB BFR with PVC Free SE Keyboard/Mouse Kit	672097-103
HPE USB BFR with PVC Free CH Keyboard/Mouse Kit	672097-113
HPE USB BFR with PVC Free KR Keyboard/Mouse Kit	672097-KD3
HPE Server Console Switches [3]	
HPE Server Console 0x2x8 Port Analog Switch	AF616A
HPE Server Console 0x2x16 Port Analog Switch	AF617A
HPE TAA 0x2x16xKVM Server Console G2 Switch	AF626A
HPE Server Console Switch G2 with Virtual Media & CAC [4]	
HPE 0x2x16 KVM Server Console Switch G2 with Virtual Media CAC Software	AF618A
HPE 0x2x32 KVM Server Console Switch G2 with Virtual Media CAC Software	AF619A
HPE KVM CAT5 1-pack USB Interface Adapter	336047-B21
HP IP Console Switch G2 with Virtual Media & CAC [5]	
HPE 1x4 USB/PS2 KVM Console Switch	AF611A
HPE 1x1Ex8 KVM IP Console Switch G2 with Virtual Media CAC Software	AF620A
HPE 2x1Ex16 KVM IP Console Switch G2 with Virtual Media CAC Software	AF621A
HPE 4x1Ex32 KVM IP Console Switch G2 with Virtual Media CAC Software	AF622A

USB and SD options

Description	Option Part#
HPE Flash Media Kits for USB Drives	
HPE 2GB USB Flash Media Drive Key Kit [1]	608447-B21
HPE Enterprise Mainstream Flash Media Kits for Memory Cards	
HPE 8GB SD Enterprise Mainstream Flash Media Kit	726113-B21
HPE 8GB USB Enterprise Mainstream Flash Media Drive Key Kit	737953-B21
HPE 8GB microSD Enterprise Mainstream Flash Media Kit	726116-B21
HPE 32GB microSD Enterprise Mainstream Flash Media Kit	700139-B21

NOTE:

1. HPE qualified blank USB key for use with HP ProLiant servers that support the VMware virtualization environment and other HP value-add software. HPE recommends this industry standard USB flash device for use with VMware ESXi. USB device must be installed in the internal slot of the ProLiant server for use with VMware ESXi. Refer to HP VMware Getting Started Guide for installation instructions.

Care pack services

Description	Option Part#
Proactive Care [1]	
HPE 3 year 4 hour 24x7 ProLiant DL58x Proactive Care Service	U2Z68E
HPE 3 year 4 hour 24x7 with Defective Media Retention ProLiant DL58x Proactive Care Service	U2Z71E

Description	Option Part#
HPE 3 year 6 hour Call To Repair 24x7 ProLiant DL58x Proactive Care Service	U2Z74E
HPE 3 year 6 hour Call To Repair 24x7 withDefective Media Retention ProLiant DL58x Proactive Care Service	U2Z77E
Proactive Care Personalized Support - Environmental Option [2]	
HPE 3 year ISS ProactiveCare Personalized Support	U6W98E
Installation Services [3]	
HPE Install ProLiant DL58x Service	U4617E
HPE Startup ProLiant DL58x Service	U4618E
HPE Installation and Startup for Insight Control Software	UF369E
HPE Startup HPE Systems Insight Manager Service	UA041E

NOTE:

1. Collaborative Support plus Proactive services delivered by the onshore, local language Advanced Solution Center (ASC), end-to-end case ownership from a Technical Solution Specialists and Technical Account Manager who remotely delivers firmware/software revision management, proactive scans and incident trend reports. Recommended for customers running a virtualized infrastructure and/or customers who desire an enhanced call support experience.

2. To add an onsite Account Support Manager (ASM) to Proactive Care. ASM is an assigned resource who delivers support planning and brings technical expertise and best practices advices for the customer's environment.

3. Reduce the time required to get your system up and running and help minimize disruptions to your business.

Click here for more information on care pack available.

Product related documents

Click here to view the list of product related documents.

Software Compatibility

Subtopics

OS Compatibility

OS Compatibility

Feature	Description
OS and virtualization software support for ProLiant servers	• Microsoft Windows Server • Red Hat Enterprise Linux (RHEL) • SUSE Linux Enterprise Server (SLES) • VMware
Software	• On system management • HPE Insight management • Intelligent manageability • HPE Insight Online • HPE Proactive Insight experience • HPE SAP HANA Ivy Bridge

Useful Links

Description	Direct links
Alerts	**Click here to view " Advisories, Alerts and Bulletins and Notices of HPE ProLiant DL580 Gen8".**

Drivers and Software	**Click here to view "Drivers and software of HPE ProLiant DL580 Gen8".**
Knowledge article	**Click here to view" Knowledge articles, Troubleshooting, FAQ, How to , Information document of HPE ProLiant DL580 Gen8".**
Manuals	**Click here to view "Manuals, Guides,Release notes, Troubleshooting articles and other related document of HPE ProLiant DL580 Gen8".**
Videos	**Click here to access " Videos of Remove/Replace, Setup/Installation, Troubleshooting, Management/Operations of HPE ProLiant DL580 Gen8".**