RETIRED: This document has been officially retired, and the base products listed herein are now considered obsolete and are no longer available for sale. Consequently, the information contained within may no longer be current. This document is provided exclusively for reference and informational purposes.

Overview

HPE ProLiant ML310e Generation 8 (Gen8) v2

HPE ProLiant ML310e Gen8 v2, a single-socket 4U tower server, delivers essential availability and expansion needed to accommodate changing business needs. It is ideal for remote sites and corporate branch offices running file/print, web messaging, and small vertical applications or databases.

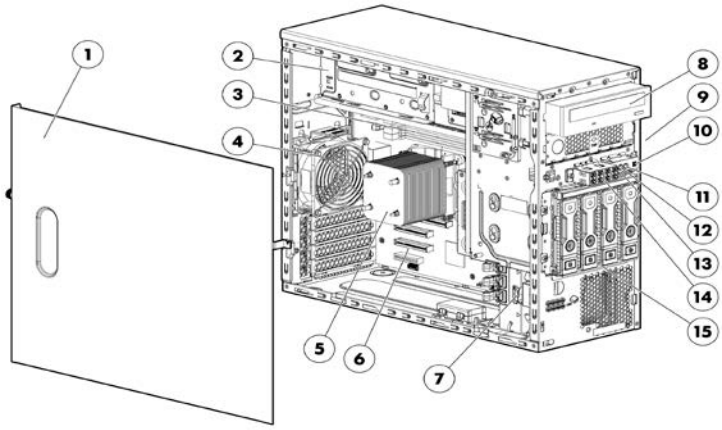

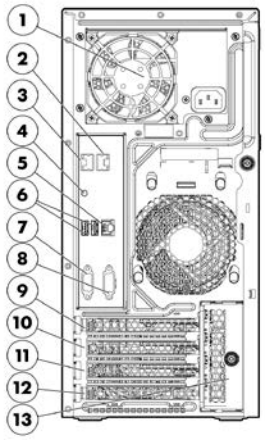

Front View:

1. Quick removal access panel
2. Power Supply
3. Four DIMM slots
4. Rear system fan (Processor cooling)
5. Processor Heatsink
6. Four (4) PCIe expansion slots
7. Front system fan (Expansion board cooling)
8. Half Height SATA DVD-ROM or DVD RW Optical Drive
9. Media Drive Blank
10. Power Button
11. NIC Activity LED
12. System Health
13. UID LED button
14. Four (4) USB connectors
15. Four (4) LFF or Eight (8) SFF SAS/SATA HDD cage

Rear View:

1. Power supply
2. NIC Connector 2
3. NIC Connector 1
4. UID LED Button
5. iLO Dedicated LAN Port
6. Two(2) USB 3.0 Connectors
7. Video Connector
8. Serial Connector
9. Slot 4 PCIe x16
10. Slot 3 PCIe x8
11. Slot 2 PCIe x8
12. Slot 1 PCIe x4
13. PCIe card bracket

What's New

- New HDD offering.

Standard Features

NOTE: For the Standard Features shipped in the "Factory Integrated Models", please see the "Configuration Information - Factory Integrated Models" section.

Processor One of the following depending on model	**Entry Processors** **NOTE: All support up to 1333MT/s DDR3 memory speeds.** Intel® Pentium® G3220 (3.0GHz/2-core/3MB/54W) Intel® Pentium® G3240 (3.1GHz/2-core/3MB/54W) **Base Processors** **NOTE: All support up to 1600MT/s DDR3 memory speeds.** Intel® Core™ i3-4130 (3.4GHz/2-core/3MB/54W, HT) Intel® Core™ i3-4130T (2.9GHz/2-core/3MB/35W, HT) Intel® Core™ i3-4150 (3.5GHz/2-core/3MB/54W, HT) Intel® Core™ i3-4150T (3.0GHz/2-core/3MB/35W, HT) **Performance Processors** **NOTE: All support up to 1600MT/s DDR3 memory speeds.** Intel® Xeon® E3-1230Lv3 (1.8GHz/4-core/8MB/25W, HT) Intel® Xeon® E3-1220v3 (3.1GHz/4-core/8MB/80W) Intel® Xeon® E3-1230v3 (3.3GHz/4-core/8MB/80W, HT) Intel® Xeon® E3-1231v3 (3.4GHz/4-core/8MB/80W, HT) Intel® Xeon® E3-1241v3 (3.5GHz/4-core/8MB/80W, HT) Intel® Xeon® E3-1271v3 (3.6GHz/4-core/8MB/80W, HT)
Cache Memory One of the following depending on model	8MB (1 x 8MB) L3 Cache **NOTE: For Quad-core Xeon processors.** 3MB (1 x 3MB) L3 Cache **NOTE: For Dual-core Pentium® Core™ i3 processors.**
Chipset	Intel® C222 Chipset **NOTE: For more information regarding Intel® chipsets, please see the following URL: http://www.intel.com/products/server/chipsets/.**
Upgradeability	Upgradeable to 4 cores **NOTE: Total 2 or 4 cores** Up to 4 DIMM slots available for higher memory capacity Up to 8 SFF Hard Drive Bays; Or 4 LFF Hard Drive Bays 1 x8 and 1 x16 PCIe 3.0 and 1 x8 and 1x4 PCIe 2.0 I/O slots for additional communications and storage expansion Redundant Power Supply Optical Drive Bay (up to 2)
On System Management Processor	HPE iLO (Firmware: HPE iLO4) **NOTE: For more information, visit: http://www.hp.com/go/ilo**
Memory Protection	ECC
Memory	Type HPE SmartMemory

Standard Features

One of the following depending on model

	DDR3 Unbuffered (UDIMM)
DIMM Slots Available	4
Maximum Capacity (UDIMM)	32 GB (4 x 8 GB UDIMM)

NOTE: HPE memory from previous generation servers are not fully compatible with the HPE ProLiant ML310e Gen8 v2 Server.

NOTE: Depending on the memory configuration and processor model, the memory speed may run at 1600MT/s or 1333MT/s. Please see Memory Population Table or the Online Memory Configuration Tool at: http://www.hp.com/go/ddr3memory-configurator.

Network Controller HPE Ethernet 1Gb 2-port 332i Adapter

Expansion Slots

Expansion Slot #	Technology	Bus Width*	Connector Width	Form Factor	Notes
4	PCIe 3.0	X8	X16	Full Length/Full Height	
3	PCIe 3.0	X8	X8	Full Length/Full Height	
2	PCIe 2.0	X1	x8	Full Length/Full Height	
1	PCIe 2.0	X1	X4	Half Length/Full Height	

***Indicates the number of physical electrical lanes running to the connector.**

HPE Server ROM

HPE ROM (Read Only Memory) is now digitally signed using Hewlett Packard Enterprise's Corporate Signing Service. This signature is verified before the flash process starts, reducing accidental programming and preventing malicious efforts to corrupt system ROM.

HPE ROM provides for essential initialization and validation of hardware components before control is passed to the customer-installed operating system. The ROM also provides the capability of booting from various fixed media (HDD, CD-ROM) and removable media (USB), to continue operation to the operating system.

HPE ROM performs very early configuration of the video controller, to allow monitoring of initialization progress via an attached monitor. If configuration or hardware errors are discovered during this early phase of hardware initialization, suitable messages are now displayed on the connected monitor. Additionally, these configuration or hardware errors are logged to the Integrated Management Log (IML) to assist in diagnosis.

Hewlett Packard Enterprise's ProLiant ROM is used to configure the following:

- Processor and chipset status registers
- System memory, memory map, and memory initialization
- System hardware configuration (Integrated PCI devices and optional PCIe cards).
- Customer-specific BIOS configuration (using the HPE ROM-Based Setup Utility (RBSU).

NOTE: For further information, please refer to Hewlett Packard Enterprise's RBSU (ROM based setup utility) user guide: http://www.hp.com/support/rbsu.

Storage Controller HPE Dynamic Smart Array B120i Controller

Standard Features

NOTE: Supports up to 6.0Gb/s SATA. (SATA port 0/1 support 6Gb/s and SATA port 2/3 support 3Gb/s)
NOTE: Supports RAID 0/1/10 only. No FBWC support. For FBWC, a standup Smart Array Controller card must be configured.
NOTE: For set up instructions, please refer to the HPE ProLiant ML300 series server user guide.
NOTE: For general information about HPE Smart Array B120i SATA RAID Controller, please go to: http://h18013.www1.hp.com/products/servers/proliantstorage/arraycontrollers/dynamicsmartarray/index.html

Internal Storage Devices	Optical Drives One of the following depending on model	HPE Half-Height SATA DVD-ROM Optical Drive HPE Half-Height SATA DVD-RW Optical Drive
	Hard Drives	1x500GB HPE LFF SATA HDD included in Performance Model
	Hard Drive Bays One of the following depending on model	4 LFF drive bays (non-hot-plug and hot-plug) 8 SFF hot-plug drive bays **NOTE: HPE ProLiant ML310e Series servers offer both SFF, and LFF versions.** **NOTE: All Pre-configured Models come populated with some hard drive blanks installed. Should the customer need additional hard drive blanks, they can order more using either P/N 666987-B21: HPE SFF Gen8 Hard Drive Blank Kit or P/N 666986-B21: HPE LFF Gen8 Hard Drive Blank Kit.**

Maximum Internal Storage One of the following depending on model	Hot Plug LFF SAS	16TB	4 x 4TB
	Hot Plug SFF SAS	9.6TB	8x 1.2TB
	Non Hot Plug LFF SAS	2.4TB	4 x 600GB
	Hot Plug LFF SATA	16TB	4 x 4TB
	Hot Plug SFF SATA	8TB	8 x 1TB
	Non Hot Plug LFF SATA	12TB	4 x 3TB
	Hot Plug SFF SAS SSD	3.2TB	8 x 400GB
	Hot Plug SFF SATA SSD	6.4TB	8 x 800GB
	Hot Plug LFF SATA SSD	3.2TB	4 x 800GB

Interfaces	Serial	1 (rear)
	Video	1 (rear)
	Network RJ-45 (Ethernet)	2 (1 shared for HPE Integrated Lights-Out)
	HPE iLO Remote Management Network Port	1 Gb Dedicated
	Micro SD slot	1 (internal) **NOTE: The Micro SD slot is not a hot-pluggable device. Customers should not attempt to plug a Micro SD card into the Micro SD slot while the server is powered.**
	USB	8 (4 front, 2 rear(USB3.0), 1 internal standard USB and 1 internal USB header) **NOTE: RHEL 5.9 OS would not be supporting USB3.0**

Industry Standard	ACPI 2.0b Compliant
	PCIe 3.0 Compliant

Standard Features

Compliance	PXE Support WOL Support Microsoft® Logo certifications USB 2.0 /3.0 Support
Server Power Cords	The ProLiant ML310e Gen8 v2 server is a tower server that ships standard with a 6' NEMA power cord that allows connection to wall outlets in a home or office. If customers require additional local power cords, they can check the power cord matrix for the appropriate sku. To install the ML310e Gen8 v2 server in a rack, the Tower to Rack Conversion kit (417705-B21) is required as well as a PDU power cord (416151-B21) to connect to a PDU in a data center rack.
Power Specifications	To review typical system power requirements, use the HPE Power Advisor which is available via download at URL: **http://www.hp.com/go/proliant-energy-efficient** or **http://www.hp.com/go/hppoweradvisor**. **NOTE: Power Specification and Technical Content for supported power supplies can be found at: https://www.hpe.com/h20195/v2/GetHTML.aspx?docname=c04111541**
Power Supplies	The ML310e Gen8 v2 supports two power supplies, a 350W Multi-Output Power Supply and a 460W Common Slot Gold Power Supply. The 350W Multi-Output Power Supply is a non-redundant power supply with an efficiency rating of 85%. The HPE Common Slot (CS) power supplies allow for commonality of power supplies across a wide range of ProLiant and Integrity servers, as well as HPE Storage solutions, and are designed to provide the highest power supply efficiency without degrading system performance. HPE CS power supplies are tested by the Electric Power Research Institute (EPRI) and certified through the ECOS 80 Plus power supply program. The 460W HPE CS power supply option provides an efficiency rating of up to 92%. All HPE Common Slot power sources are UL, CE Mark Compliant, hot-plug and support redundant configurations. **NOTE: Mixing of power supplies in the same server is not supported. All power supplies must be of the same output and efficiency rating. If non-matched power supplies are inserted you will get errors and operation will fail.** It is highly recommended that you use the HPE Power Advisor in defining the "Right-Size" power supply for your needs. HPE Power Advisor can be accessed at: **http://www.hp.com/go/hppoweradvisor**. **NOTE: The 80 PLUS program is a unique forum that unites electric utilities, the computer industry, and consumers in an effort to bring energy efficient technology solutions to the marketplace. 80 Plus independently tests power supply efficiency and publicly posts the results on http://www.80plus.org.** Redundant Power: Optional (1 + 1 redundant) power supplies can be purchased through power supply option kits (see Power Supplies for part numbers). **NOTE: Power Specification and Technical Content for supported power supplies can be found at: https://www.hpe.com/h20195/v2/GetHTML.aspx?docname=c04111541**
System Fans	One (1) Non-redundant system fan ships standard One (1) Non-redundant PCIe fan ships standard

Standard Features

Operating Systems and Virtualization Software Support for ProLiant Servers

Microsoft Windows Server
Canonical Ubuntu
Red Hat Enterprise Linux (RHEL)
SUSE Linux Enterprise Server (SLES)
VMware

NOTE: For more information on the HPE Certified and Supported ProLiant Servers for OS and Virtualization Software and latest listing of software drivers available for your server, please visit our Support Matrix at: http://www.hp.com/go/ossupport and our driver download page: http://www.hp.com/support/ML310eGen8v2.

Graphics

Integrated Matrox G200 video standard

- 1280 x 1024 (32 bpp)
- 1920 x 1200 (16 bpp)

HPE iLO 4 On System Management Memory

- 16 MB Flash
- 256 MB DDR 3 with ECC (112 MB after ECC and video)

Form Factor
One of the following depending on model

Micro ATX Tower (4U) chassis with feet/bezel:
14.5" (36.82cm) Height x 6.89" (17.5cm) Width x 18.71" (47.52cm) Length

8 SFF Drive Bay Cage:
4.6" (11.72cm) Height x 5.74" (14.57cm) Width x 4.79" (12.16cm) Length

4 LFF Drive Bay Cage:
4.6" (11.72cm) Height x 5.74" (14.57cm) Width x 6.90" (17.54cm) Length

On System Management

HPE iLO Management Engine

HPE iLO Management Engine is a comprehensive set of embedded management features supporting the complete lifecycle of the server, from initial deployment, through ongoing management, to service alerting and remote support. HPE iLO Management Engine comes standard on all HPE ProLiant Gen8 servers. The HPE iLO Management Engine portfolio includes:

- **HPE iLO:** The HPE iLO (Integrated Lights-Out) management processor is the core foundation for the HPE iLO Management Engine
- **HPE Agentless Management:** Provides built in server health monitoring and alerting capability without OS agents, that starts working the moment a power cord and an Ethernet cable are connected.
- **HPE Active Health System:** Always on, continuous monitoring for increased stability and shorter downtimes; 100% configuration history; Health and service alerts and easy export and upload to Service and Support.
- **HPE Intelligent Provisioning:** Lets customers provision and configure a single server without any separate media. No more SmartStart CDs or Smart Update Firmware DVD are needed.
  - To start Intelligent Provisioning:
    - Press the F10 key during the ProLiant Gen8 server boot process (also known as power on self-test or POST).

Standard Features

- Please go to the Intelligent Provisioning website at **http://www.hp.com/go/intelligentprovisioning** for additional information and to view usage videos.
- Use the Service Pack for ProLiant (SPP) at **http://www.hp.com/go/spp** to get firmware and software updates.

- **HPE iLO Mobile App:** Enables the ability to access, deploy, and manage your server anytime from anywhere from select smartphones and mobile devices. For additional information please visit: **http://www.hp.com/go/ilo/mobileapp**

NOTE: For more information, visit: http://www.hp.com/go/ilo or HPE iLO Management Engine technologies whitepaper.

HPE Insight Management	HPE Service Pack for ProLiant (SPP)	HPE Service Pack for ProLiant (SPP) and HPE Smart Update Manager (HPE SUM) provide a comprehensive approach to firmware and system software maintenance. Together they provide better operating stability and ensure maximum uptime. The SPP will be updated at a predictable cadence, typically coinciding with new HPE server hardware launches. By enabling firmware to be updated online and integrating firmware and system software updates in one operation, HPE SUM and the SPP offer faster updates of individual servers and dramatically faster updates of entire BladeSystem enclosures. Further improving system uptime and stability is the fact that Hewlett Packard Enterprise provides 12 months of support for each Service Pack for ProLiant release. The user experience around HPE SUM and the SPP has been improved in several ways, starting with the web download. A single web page provides access to a single download containing both the latest version of HPE SUM and the latest SPP. Optional smaller subsets with only specific types of servers or specific operating systems are offered to save on download time. The HPE SUM application provides a straightforward, intuitive user interface that guides the user through the steps of discovery, analyses and update, providing comprehensive information on available updates, criticality and interdependencies. This information is also available in reports. By providing the option of multiple local or shared repositories which can be easily updated from hpe.com, HPE SUM provides the tools to optimize stability and consistency throughout the company. While HPE SUM and the SPP recommend the combinations of firmware and system software that Hewlett Packard Enterprise has found to be the best practice, the application gives customers the flexibility to set their own specific baseline. The Service Pack for ProLiant has been rigorously tested with specific attention for interaction between firmware, drivers and agents both within the server as well as in interaction with the BladeSystem enclosure components (Onboard Administrator and Virtual Connect). This testing ensures the highest quality as well as providing the input for HPE SUM to deploy updates taking into account all interdependencies, when determining the correct updates and order of update deployment. **NOTE: The Service Pack for ProLiant (which includes HPE SUM) can be downloaded from http://www.hp.com/go/spp/download. More**

Standard Features

	information can be found: http://www.hp.com/go/SmartUpdate, http://www.hp.com/go/spp and http://www.hp.com/go/hpsum
Security	Power-on password Administrator's password
Warranty	This product is covered by a global limited warranty and supported by HPE Services and a worldwide network of Hewlett Packard Enterprise Authorized Channel Partners resellers. Hardware diagnostic support and repair is available for three years from date of purchase. Support for software and initial setup is available for 90 days from date of purchase. Enhancements to warranty services are available through HPE Pointnext operational services or customized service agreements. Hard drives have either a one year or three year warranty; refer to the specific hard drive QuickSpecs for details. **NOTE: Server Warranty includes 1-Year Parts, 1-Year Labor, 1-Year Onsite support with next business day response. Warranty repairs may be accomplished through the use of Customer Self Repair (CSR) parts. These parts fall into two categories: 1) Mandatory CSR parts are designed for easy replacement. A travel and labor charge will result when customers decline to replace a Mandatory CSR part; 2) Optional CSR parts are also designed for easy replacement but may involve added complexity. Customers may choose to have Hewlett Packard Enterprise replace Optional CSR parts at no charge. Additional information regarding worldwide limited warranty and technical support is available at: http://h18004.www1.hp.com/products/servers/platforms/warranty/index.html**

Optional Features

HPE Insight Management	HPE Insight Control	HPE Insight Control, a product option, delivers essential infrastructure management that can help save time and money by making it easy to deploy, migrate, monitor, remote control, and optimize your IT infrastructure through a single, simple management console. HPE Insight Control also supports Location and Power Discovery Services to automate many configuration, asset tracking, and power management tasks to speed implementation and prevent downtime. For more information, see **http://www.hp.com/go/insightcontrol**. HPE Insight Control includes one year of 24 x 7 HPE Software Technical Support and Update Service ensuring rapid access to Hewlett Packard Enterprise support staff and proactive delivery of software updates. For more information about this service, see: **http://www.hp.com/services/insight**.
	HPE iLO Advanced	HPE Integrated Lights-Out Advanced License a product option, providing smart remote server management without compromise. iLO Advanced unlocks the full set of remote administration functionality for all HPE ProLiant servers by activating the full Virtual Keyboard Video and Mouse remote console, multi-user collaboration, console record and replay, GUI-based and scripted virtual media and virtual folders, and enhanced security and power management functionality. For more information, see: **http://www.hp.com/go/iloadvance**
	HPE iLO Essentials	HPE iLO Essentials license ideal for small and medium business customers. The specially created HPE iLO Essentials (a subset of iLO Advanced functionality) saves SMB customers time and money, by ease of remote server set up through the interactive virtual media, lowering operational costs with remote access via the Integrated Remote Console, and faster time to resolution with email-based proactive notifications. With this newly designed HPE iLO Essentials license SMB customers now have the option of a server management package solely design and priced just right for their IT environments. HPE iLO Essentials is available on all HPE ProLiant Gen8 e-series making this an ideal solution for small business owners. For more information, see: **http://www.hp.com/go/iLO/essentials**

Storage Software

Whether you need to solve a specific data protection, archiving, or storage command and control challenge, or deliver on strategic consolidation, compliance, or continuity initiatives, look no further than HPE storage software. Our storage software helps you reduce costs, simplify storage infrastructure, protect vital assets and respond faster to business opportunities.

Storage software that gets the job done:

- **Data Protection and Recovery Software**
  Whether you're a large enterprise or a smaller business, HPE data protection and recovery software will cost-effectively protect you against disaster and ensure business continuity.
- **Data Archive and Migration Software**
  The HPE storage software enables you to comply with data retention and retrieval requirements, improve application performance, and reduce costs by efficiently migrating infrequently accessed or less valuable data to lower cost storage.
- **Storage Resource Management Software (SRM)**
  The HPE storage resource management software reduces operational costs and provides the command and control foundation you need to efficiently manage and visualize your physical and virtual environments.

Optional Features

- **Data Replication Software**
  Hewlett Packard Enterprise offers array-based and host-based replication software for use in disaster recovery, testing, application development and reporting.
- **Storage Device Management Software**
  Maximize your investment in HPE storage and networking with software that enables hardware-specific configuration, performance tuning and connectivity management.
- **HPE StoreVirtual VSA**
  With HPE StoreVirtual VSA you can use the power of virtualization to turn a set of heterogeneous and disconnected physical disk drives in your servers and storage devices into a single pool of logical storage capacity.

NOTE: For more information available Storage Software including QuickSpecs, please see: http://www.hp.com/go/storage/software.

HPE Insight Online	HPE Insight Online is a new addition to the HPE Support Center for one stop, secure access to product and Hewlett Packard Enterprise support information personalized to your IT environment. Insight Online can automatically display devices remotely monitored by HPE Insight Remote Support. With Insight Online's easy navigation you can efficiently track your IT support contracts and device status from anywhere and at any time. **http://www.hp.com/go/insightonline**
Factory Express Portfolio for Servers and Storage	HPE Factory Express offers configuration, customization, integration and deployment services for HPE servers and storage products. Customers can choose how their factory solutions are built, tested, integrated, shipped and deployed. Factory Express offers service packages for simple configuration, racking, installation, complex configuration and design services as well as individual factory services, such as image loading, asset tagging, and custom packaging. Hewlett Packard Enterprise products supported through Factory Express include a wide array of servers and storage: HPE Integrity, HPE ProLiant, HPE ProLiant Server Blades, HPE BladeSystem, HPE 9000 servers as well as the MSAxxxx, VA7xxx, EVA, XP, rackable tape libraries and configurable network switches. For more information on Factory Express services for your specific server model please contact your sales representative or go to: **http://www.hp.com/go/factory-express**
HPE Enterprise Configurator	The HPE eConfigure Enterprise Configurator now provides factory default racking for our Hewlett Packard Enterprise hardware portfolio. This approach is aligned with our strategic direction to meet the needs and expectations of our valued customers. If you require "custom" rack configuration, please contact the HPE Customer Business Center or an Authorized Partner for assistance. For additional information please visit: **http://www.hp.com/products/configurator**

Service and Support

Service and Support	**HPE Technology Services for Industry Standard Servers** HPE Technology Services delivers confidence, reduces risk and helps customers realize agility and stability. Connect to Hewlett Packard Enterprise to help prevent problems and solve issues faster. Our support technology lets you to tap into the knowledge of millions of devices and thousands of experts to stay informed and in control, anywhere, any time. **Protect your business beyond warranty with HPE Pointnext operational services** HPE Pointnext operational services enable you to order the right service level, length of coverage and response time as you purchase your new server, giving you full entitlement for the term you select.
Optimized Care	**Supports maintaining servers at optimum performance availability** **HPE Proactive Care with 24x7 coverage, three year Care Pack Service** HPE Proactive Care helps prevent problems and stabilize IT by utilizing secure, real-time, predictive analytics and proactive consultations when your products are connected to Hewlett Packard Enterprise. This Care Pack Service combines three years' proactive reporting and advice with our 24x7 coverage and enhanced escalation management, four hour hardware response time and two hour call back for software questions on leading industry standard software running on your HPE ProLiant server. **https://www.hpe.com/h20195/v2/getpdf.aspx/4aa3-8855enw.pdf**
Standard Care	**Supports maintaining high level of server availability** **Foundation Care 24x7, three-year Care Pack Service** HPE Foundation Care 24x7 connects you to Hewlett Packard Enterprise 24 hours a day, seven days a week for assistance on resolving issues. Hardware onsite response within four hours if needed; collaborative software included in this Care Pack service provides troubleshooting assistance on industry leading software running on your HPE server. Simplify your support experience and make Hewlett Packard Enterprise your first call for hardware or software questions. **https://www.hpe.com/h20195/V2/GetDocument.aspx?docname=4AA4-8876ENW&cc=us&lc=en**
Basic Care	**Delivers minimum recommended support service level** **Foundation Care NBD, three-year Care Pack Service** HPE Foundation Care Next Business Day connects you to Hewlett Packard Enterprise during business hours for assistance on resolving issues – features next business day hardware onsite response if needed and software call back within two hours. Collaborative software support is included and provides troubleshooting assistance on industry leading software running on your server. Simplify your support experience and make Hewlett Packard Enterprise your first call for hardware or software questions. **https://www.hpe.com/h20195/V2/GetDocument.aspx?docname=4AA4-8876ENW&cc=us&lc=en**
Get connected to Hewlett Packard Enterprise to improve your support experience	Prevent problems with innovative, automated monitoring tools and proactive services. Combining Proactive Care Services with our remote support technology such as Insight Online provides you with expert advice and personalized, cloud-based automated IT support, helping to prevent unplanned down time and solve problems quickly. For more information, visit: **http://www.hp.com/go/proactiveinsightexperience**
Related Services	**HPE ProLiant Server Hardware Installation** Provides for the basic hardware installation of HPE branded servers, storage devices and networking options to assist you in bringing your new hardware into operation in a timely and professional manner.

Service and Support

http://h20195.www2.hp.com/V2/GetPDF.aspx/5981-9356EN.pdf

Factory Express for Servers and storage
HPE Factory Express offers configuration, customization, integration and deployment services for HPE servers and storage products. Customers can choose how their factory solutions are built, tested, integrated, shipped and deployed. For more information on Factory Express services for your specific server model please contact your sales representative or go to: **http://www.hp.com/go/factory-express**.

Data Privacy Services
Protect your data through better media management. HPE Data privacy services help manage and protect sensitive data to reduce the risk of unauthorized access to private information and help meet compliance requirements. Our retention services allow you to keep drives and other devices upon failure, our removal services provide convenient data sanitization and our recovery services allow you to safely retire IT assets and capture any remaining value from the hardware.
http://www.hp.com/services/dataprivacy

Additional HPE Pointnext operational services can be found at: **http://www.hp.com/go/cpc**

HPE Support Center

Personalized online support portal with access to information, tools and experts to support Hewlett Packard Enterprise business products. Submit support cases online, chat with Hewlett Packard Enterprise experts, access support resources or collaborate with peers. Learn more
http://www.hp.com/go/hpsc
The HPE Support Center Mobile App* allows you to resolve issues yourself or quickly connect to an agent for live support. Now, you can get access to personalized IT support anywhere, anytime.
HPE Insight Remote Support and HPE Support Center are available at no additional cost with a Hewlett Packard Enterprise warranty, HPE Care Pack or Hewlett Packard Enterprise contractual support agreement.
NOTE: *HPE Support Center Mobile App is subject to local availability

Parts and Materials

Hewlett Packard Enterprise will provide HPE-supported replacement parts and materials necessary to maintain the covered hardware product in operating condition, including parts and materials for available and recommended engineering improvements.

Parts and components that have reached their maximum supported lifetime and/or the maximum usage limitations as set forth in the manufacturer's operating manual, product quick-specs, or the technical product data sheet will not be provided, repaired, or replaced as part of these services.

The defective media retention service feature option applies only to Disk or eligible SSD/Flash Drives replaced by Hewlett Packard Enterprise due to malfunction.

For more information

To learn more on HPE ProLiant servers and HPE BladeSystem servers, please contact your Hewlett Packard Enterprise sales representative or Hewlett Packard Enterprise Authorized Channel Partner. Or visit: **http://www.hp.com/services/proliant**

Pre-configured Models

NOTE: For the Standard Features shipped in the "Factory Integrated Models", please see the "Configuration Information - Factory Integrated Models" section.
NOTE: Pre-configured models ship with the configurations below. Options can be selected from the Core or Additional options section of this QuickSpecs.
NOTE: Hewlett Packard Enterprise does not allow factory integration of options into pre-configured models. Any additional options purchased will be shipped separately.
NOTE: If you desire a custom configuration please see "Configuration Information - Factory Integrated Models" section of this QuickSpecs.
NOTE: Maximum speed supported depends on the CPU installed.
Please see Memory Population Table or the Online Memory Configuration Tool at: **http://www.hp.com/go/ddr3memory-configurator**.
NOTE: All Pre-configured Models come populated with some hard drive blanks installed. Should the customer need additional hard drive blanks, they can order more using either P/N 666987-B21: HPE SFF Gen8 Hard Drive Blank Kit or P/N 666986-B21: HPE LFF Gen8 Hard Drive Blank Kit.

Entry Models

HP ProLiant ML310e Gen8 v2 i3-4150 1P 2GB-U B120i Non-hot Plug 350W PS Entry Server
768748-001

Processor(s)	(1) Intel® Core™ i3-4150 (3.5GHz/2-core/3MB/54W, HT) Processor
Cache Memory	3MB (1 x 3MB) L3 cache
Memory	2GB (1 x 2GB) PC3-12800E DDR3 UDIMM
Network Controller	HPE Ethernet 1Gb 2-port 332i Adapter
Storage Controller	HPE Dynamic Smart Array B120i Controller
Hard Drive	None
Internal Storage	4 LFF SAS/SATA Non Hot Plug HDD cage; includes 4 LFF hard drive blanks
Optical Drive	None
Power Supply	HPE 350W Multi-Output Power Supply
Fans	One (1) Non-redundant system fan ships standard One (1) Non-redundant PCIe fan ships standard
Management	HPE iLO Management Engine (standard on system NIC) Optional: HPE iLO Essentials or HPE Insight Control
Form Factor	Micro ATX Tower (4U)
Warranty	Server Warranty includes 1-Year Parts, 1-Year Labor, 1-Year Onsite support with next business day response

Base Models

HP ProLiant ML310e Gen8 v2 E3-1220v3 1P 4GB-U B120i 350W PS Svr
712329-001

Processor(s)	(1) Intel® Xeon® E3-1220v3 (3.1GHz/4-core/8MB/80W) Processor
Cache Memory	8MB (1 x 8MB) L3 cache
Memory	4GB (1 x 4GB) PC3-12800E DDR3 UDIMM
Network Controller	HPE Ethernet 1Gb 2-port 332i Adapter
Storage Controller	HPE Dynamic Smart Array B120i Controller
Hard Drive	None
Internal Storage	4 LFF SAS/SATA Hot Plug HDD cage; includes 4 LFF hard drive blanks
Optical Drive	HPE Half-Height 16x SATA DVD-RW

Pre-configured Models

Power Supply	HPE 350W Multi-Output Power Supply
Fans	One (1) Non-redundant system fan ships standard One (1) Non-redundant PCIe fan ships standard
Management	HPE iLO Management Engine (standard on system NIC) Optional: HPE iLO Essentials or HPE Insight Control
Form Factor	Micro ATX Tower (4U)
Warranty	Server Warranty includes 1-Year Parts, 1-Year Labor, 1-Year Onsite support with next business day response

Performance Models

HP ProLiant ML310e Gen8 v2 E3-1241v3 1P 8GB-U B120i 460W PS Performance Server 768729-001	**Processor(s)**	(1) Intel® Xeon® E3-1241v3 (3.4GHz/4-core/8MB/80W) Processor
	Cache Memory	8MB (1 x 8MB) L3 cache
	Memory	8GB (1 x 8GB) PC3-12800E DDR3 UDIMM
	Network Controller	HPE Ethernet 1Gb 2-port 332i Adapter
	Storage Controller	HPE Dynamic Smart Array B120i Controller
	Hard Drive	1x500GB HPE LFF SATA
	Internal Storage	4 LFF SAS/SATA Hot Plug HDD cage; includes 3 LFF hard drive blanks
	Optical Drive	HPE Half-Height 16x SATA DVD-RW
	Power Supply	HPE 460W Common Slot Gold Hot Plug Power Supply
	Fans	One (1) Non-redundant system fan ships standard One (1) Non-redundant PCIe fan ships standard
	Management	HPE iLO Management Engine (standard on system NIC) Optional: HPE iLO Essentials or HPE Insight Control
	Energy Star	Meets Energy Star requirements
	Form Factor	Micro ATX Tower (4U)
	Warranty	Server Warranty includes 1-Year Parts, 1-Year Labor, 1-Year Onsite support with next business day response

Smart Buy Models

HP ProLiant ML310e Gen8 v2 E3-1220v3 1P 4GB-U B120i NHP 4 LFF 350W PS US Svr/S-Buy 724977-S01	**Processor(s)**	(1) Intel® Xeon® E3-1220v3 (3.1GHz/4-core/8MB/80W) Processor
	Cache Memory	8MB (1 x 8MB) L3 cache
	Memory	4GB (1 x 4GB) PC3-12800E DDR3 UDIMM
	Network Controller	HPE Ethernet 1Gb 2-port 332i Adapter
	Storage Controller	HPE Dynamic Smart Array B120i Controller
	Hard Drive	None included
	Internal Storage	4 LFF SAS/SATA Non Hot Plug HDD cage; includes 4 LFF hard drive blanks
	Optical Drive	HPE Half-Height SATA DVD-RW
	Power Supply	HPE 350W Multi-Output Power Supply
	Fans	One (1) Non-redundant system fan ships standard One (1) Non-redundant PCIe fan ships standard
	Management	HPE iLO Management Engine (standard on system NIC) Optional: HPE iLO Essentials or HPE Insight Control
	Energy Star	Meets Energy Star requirements
	Form Factor	Micro ATX Tower (4U)
	Warranty	Server Warranty includes 1-Year Parts, 1-Year Labor, 1-Year Onsite support with next business day response
HP ProLiant ML310e Gen8 v2 E3-1220v3 1P 4GB-U B120i 500GB HP SATA 4 LFF 350W PS US Svr/S-Buy 724978-S01	**Processor(s)**	(1) Intel® Xeon® E3-1220v3 (3.1GHz/4-core/8MB/80W) Processor
	Cache Memory	8MB (1 x 8MB) L3 cache
	Memory	4GB (1 x 4GB) PC3-12800E DDR3 UDIMM
	Network Controller	HPE Ethernet 1Gb 2-port 332i Adapter
	Storage Controller	HPE Dynamic Smart Array B120i Controller
	Hard Drive	1 x 500GB HP LFF SATA
	Internal Storage	4 LFF SAS/SATA HDD cage; includes 3 LFF hard drive blanks
	Optical Drive	HPE Half-Height SATA DVD-RW
	Power Supply	HPE 350W Multi-Output Power Supply
	Fans	One (1) Non-redundant system fan ships standard One (1) Non-redundant PCIe fan ships standard
	Management	HPE iLO Management Engine (standard on system NIC) Optional: HPE iLO Essentials or HPE Insight Control
	Energy Star	Meets Energy Star requirements
	Form Factor	Micro ATX Tower (4U)
	Warranty	Server Warranty includes 1-Year Parts, 1-Year Labor, 1-Year Onsite support with next business day response
HP ProLiant ML310e Gen8 v2 E3-1230v3 1P 8GB-U B120i SATA 4 LFF 350W PS US Svr/S-Buy 736661-S01	**Processor(s)**	(1) Intel® Xeon® E3-1230v3 (3.3GHz/4-core/8MB/80W, HT) Processor
	Cache Memory	8MB (1 x 8MB) L3 cache
	Memory	8GB (2 x 4GB) PC3-12800E DDR3 UDIMM
	Network Controller	HPE Ethernet 1Gb 2-port 332i Adapter
	Storage Controller	HPE Dynamic Smart Array B120i Controller

Pre-configured Models

Hard Drive	None included
Internal Storage	4 LFF SAS/SATA HDD cage; includes 4 LFF hard drive blanks
Optical Drive	HPE Half-Height SATA DVD-RW
Power Supply	HPE 350W Multi-Output Power Supply
Fans	One (1) Non-redundant system fan ships standard One (1) Non-redundant PCIe fan ships standard
Management	HPE iLO Management Engine (standard on system NIC) Optional: HPE iLO Essentials or HPE Insight Control
Energy Star	Meets Energy Star requirements
Form Factor	Micro ATX Tower (4U)
Warranty	Server Warranty includes 1-Year Parts, 1-Year Labor, 1-Year Onsite support with next business day response

Configuration Information - Factory Integrated Models

NOTE: This section lists some of the steps required to configure a Factory Integrated Model. To ensure only valid configurations are ordered, Hewlett Packard Enterprise recommends the use of a Hewlett Packard Enterprise approved configurator. Contact your local sales representative for information on configurable product offerings and requirements.
NOTE: Factory Integrated Models must start with a CTO Server.
NOTE: FIO indicates that this option is only available as a factory installable option.
NOTE: All Factory Integrated Models will be populated with sufficient hard drive blanks based on the number of initial hard drives ordered with the server.

Step 1: Base Configuration (choose one of the following configurable models)

HPE Models

HPE ProLiant ML310e Gen8 v2 Non-hot Plug 4 LFF Configure-to-order Server 722445-B21

Factory Integrated Model ships with:

HPE Ethernet 1Gb 2-port 332i Adapter
HPE iLO Management Engine (standard on shared system NIC)
HPE Dynamic Smart Array B120i Controller (RAID 0/1/10)
4 ports for HDD
NOTE: For set up instructions for HPE Dynamic Smart Array B120i Controller please refer to the HPE ProLiant ML300 series server user guide.
NOTE: For general information about HPE Dynamic Smart Array B120i Controller, please visit: http://www.hp.com/go/dynamicsa
Non Hot-Plug SAS/SATA 4 port cable
PCA Power Cord
Micro ATX Tower (4U)

HP ProLiant ML310e Gen8 v2 Hot Plug 4 LFF Configure-to-order Server 722446-B21

Factory Integrated Model ships with:

HPE Ethernet 1Gb 2-port 332i Adapter
HPE iLO Management Engine (standard on shared system NIC)
HPE Dynamic Smart Array B120i Controller (RAID 0/1/10)
4 ports for HDD
NOTE: For set up instructions for HPE Dynamic Smart Array B120i Controller please refer to the HPE ProLiant ML300 series server user guide.
NOTE: For general information about HPE Dynamic Smart Array B120i Controller, please visit: http://www.hp.com/go/dynamicsa
Hot-Plug SAS/SATA 4 port cable
PCA Power Cord
Micro ATX Tower (4U)

HP ProLiant ML310e Gen8 v2 Hot Plug 8 SFF Configure-to-order Server 722447-B21

Factory Integrated Model ships with:

HPE Ethernet 1Gb 2-port 332i Adapter
HPE iLO Management Engine (standard on shared system NIC)
Standup HPE Smart Array Controller or Host Bus Adapter required
PCA Power Cord
Micro ATX Tower (4U)

Step 2: Choose Required Options (only one of the following from each list unless otherwise noted)

HPE Processors **Entry Processors**

Configuration Information - Factory Integrated Models

	NOTE: All support up to 1333MT/s DDR3 memory speeds.	
	HP ML310e Gen8 v2 Intel Pentium G3240 (3.1GHz/2-core/3MB/54W) FIO Processor Kit	767102-L21
	Base Processors	
	NOTE: All support up to 1600MT/s DDR3 memory speeds.	
	HP ML310e Gen8 v2 Intel Core i3-4150 (3.5GHz/2-core/3MB/54W) FIO Processor Kit	767100-L21
	HP ML310e Gen8 v2 Intel Core i3-4150T (3GHz/2-core/3MB/35W) FIO Processor Kit	767101-L21
	Performance Processors	
	NOTE: All support up to 1600MT/s DDR3 memory speeds.	
	HP ML310e Gen8 v2 Intel Xeon E3-1230Lv3 (1.8GHz/4-core/8MB/25W) FIO Processor Kit	740649-L21
	HP ML310e Gen8 v2 Intel Xeon E3-1220v3 (3.1GHz/4-core/8MB/80W) FIO Processor Kit	723935-L21
	HP ML310e Gen8 v2 Intel Xeon E3-1231v3 (3.4GHz/4-core/8MB/80W) FIO Processor Kit	767097-L21
	HP ML310e Gen8 v2 Intel Xeon E3-1241v3 (3.5GHz/4-core/8MB/80W) FIO Processor Kit	767098-L21
	HP ML310e Gen8 v2 Intel Xeon E3-1271v3 (3.6GHz/4-core/8MB/80W) FIO Processor Kit	767099-L21
HPE Memory	**Unbuffered with ECC DIMMs (UDIMMs)**	
	HPE 2GB(1x2GB) Single Rank x8 PC3-12800E (DDR3-1600) Unbuffered CAS-11 Memory Kit	669320-B21
	HP 2GB (1x2GB) Single Rank x8 PC3L-10600(DDR3-1333) Unbuffered CAS-9 LP Memory	647905-B21
	HP 2GB (1x2GB) Single Rank x8 PC3L-12800E (DDR3-1600) Unbuffered CAS-11 Low Voltage Memory Kit	713975-B21
	HPE 4GB (1x4GB) Dual Rank x8 PC3-12800E (DDR3-1600) Unbuffered CAS-11 Memory Kit	669322-B21
	HP 4GB (1x4GB) Dual Rank x8 PC3L-10600(DDR3-1333) Unbuffered CAS-9 LP Memory Kit	647907-B21
	HP 4GB (1x4GB) Dual Rank x8 PC3L-12800E (DDR3-1600) Unbuffered CAS-11 Low Voltage Memory Kit	713977-B21
	HPE 8GB (1x8GB) Dual Rank x8 PC3- 12800E (DDR3-1600) Unbuffered CAS-11 Memory Kit	669324-B21
	HP 8GB (1x8GB) Dual Rank x8 PC3L-10600(DDR3-1333) Unbuffered CAS-9 LP Memory Kit	647909-B21

Configuration Information - Factory Integrated Models

	HP 8GB (1x8GB) Dual Rank x8 PC3L-12800E (DDR3-1600) Unbuffered CAS-11 Low Voltage Memory Kit	713979-B21
	HPE 4GB (1x4GB) Single Rank x4 PC3-12800E (DDR3-1600) Unbuffered CAS-11 Memory Kit	820077-B21
	NOTE: All DDR3 memory option kits consist of one DIMM per kit. For detailed memory configuration rules and guidelines, please use the Online DDR3 Memory Configuration Tool: http://www.hp.com/go/ddr3memory-configurator.	
HPE Power Supplies	**NOTE: Mixing of power supplies in the same server is not supported. All power supplies inside a server must be exactly the same model. Mixing Gold, Platinum, and Platinum Plus certified power supplies is not supported.** **NOTE: Prior to making a power supply selection it is highly recommended that the HPE Power Advisor is run to determine the right size power supply for your server configuration. The HPE Power Advisor is located at: http://www.hp.com/go/hppoweradvisor**	
	HPE 350W Factory Integrated Power Supply Kit	674838-B21
	HPE Common Slot Gold Power Supplies **NOTE: The following Power Supplies offer 92% Efficiency.**	
	HPE 460W Common Slot Gold Hot Plug Power Supply Kit	503296-B21
	Enablement Kit	
	HP 4U Redundant Power Supply Enablement Kit **NOTE: The HPE 4U Redundant Power Supply Enablement Kit (675843-B21) must be installed when using HPE Common Slot power supplies.**	675843-B21

Step 3: Choose Additional Factory Integratable Options

HPE Insight Software	HPE Insight Control including 1yr 24x7 Support ProLiant ML/DL/BL-bundle Single Server FIO LTU	C6N36A
	HPE Insight Control including 1yr 24x7 Support ProLiant ML/DL/BL-bundle FIO E-LTU	C6N36ABE

Step 4: Choose Additional Options for Factory Integration

NOTE: For additional options, please refer to the "Core Options" and "Additional Options" section below.

Core Options

NOTE: Some options may not be integrated at the factory. Contact your local sales representative for additional information.

HPE Unique Options	HP 4U 4 Large Form Factor Hot Plug Hard Drive Backplane Kit **NOTE: The LFF Kit is a backplane kit designed for going from NHP LFF to hot-plug LFF.**	674839-B21
	HP 4U 8 Small Form Factor Hot Plug Hard Drive Cage Kit **NOTE: The SFF Kit is the cage plus backplane and designed to convert from any LFF configuration to SFF.**	674841-B21
HPE Memory	**NOTE: To realize the performance memory capabilities listed in this document, HPE SmartMemory is required. For additional information, please see the HPE SmartMemory QuickSpecs.** **NOTE: HPE memory from previous generation servers are not fully compatible with SmartMemory features in Gen8 Servers.** **Unbuffered with ECC DIMMs (UDIMMs)**	
	HPE 2GB(1x2GB) Single Rank x8 PC3-12800E (DDR3-1600) Unbuffered CAS-11 Memory Kit	669320-B21
	HP 2GB (1x2GB) Single Rank x8 PC3L-10600(DDR3-1333) Unbuffered CAS-9 LP Memory	647905-B21
	HP 2GB (1x2GB) Single Rank x8 PC3L-12800E (DDR3-1600) Unbuffered CAS-11 Low Voltage Memory Kit	713975-B21
	HPE 4GB (1x4GB) Dual Rank x8 PC3-12800E (DDR3-1600) Unbuffered CAS-11 Memory Kit	669322-B21
	HP 4GB (1x4GB) Dual Rank x8 PC3L-10600(DDR3-1333) Unbuffered CAS-9 LP Memory Kit	647907-B21
	HP 4GB (1x4GB) Dual Rank x8 PC3L-12800E (DDR3-1600) Unbuffered CAS-11 Low Voltage Memory Kit	713977-B21
	HPE 8GB (1x8GB) Dual Rank x8 PC3- 12800E (DDR3-1600) Unbuffered CAS-11 Memory Kit	669324-B21
	HP 8GB (1x8GB) Dual Rank x8 PC3L-10600(DDR3-1333) Unbuffered CAS-9 LP Memory Kit	647909-B21
	HP 8GB (1x8GB) Dual Rank x8 PC3L-12800E (DDR3-1600) Unbuffered CAS-11 Low Voltage Memory Kit	713979-B21
	HPE 4GB (1x4GB) Single Rank x4 PC3-12800E (DDR3-1600) Unbuffered CAS-11 Memory Kit	820077-B21
HPE Drive Cage Options	HP 4U 4 Large Form Factor Hot Plug Hard Drive Backplane Kit **NOTE: The LFF Kit is a backplane kit designed for going from NHP LFF to hot-plug LFF.**	674839-B21
	HP 4U 8 Small Form Factor Hot Plug Hard Drive Cage Kit **NOTE: The SFF Kit is the cage plus backplane and designed to convert from any**	674841-B21

Core Options

	LFF configuration to SFF.	
HPE Optical Drives	HPE Half-Height SATA DVD ROM JackBlack Optical Drive	624189-B21
	HPE Half-Height SATA DVD RW JackBlack Optical Drive	624192-B21
HPE Hard Drives	**NOTE: The components of a storage subsystem (e.g. the drive, the HBA/controller, firmware, and the server backplane) should operate at the same data transfer rate or the system bandwidth will be negotiated down to an acceptable level for all components.** **NOTE: Hard drives have either a one year or three year warranty; refer to the specific hard drive QuickSpecs for details.**	
	12G SAS Hot Plug with SmartDrive SFF (2.5-inch) Enterprise Drives	
	HPE 600GB SAS 12G Enterprise 15K SFF (2.5in) SC 3yr Wty HDD	759212-B21
	HPE 450GB SAS 12G Enterprise 15K SFF (2.5in) SC 3yr Wty HDD	759210-B21
	HPE 300GB SAS 12G Enterprise 15K SFF (2.5in) SC 3yr Wty HDD	759208-B21
	12G SAS Hot Plug SmartDrive LFF (3.5-inch) Converter Enterprise Drives	
	HPE 600GB SAS 12G Enterprise 15K LFF (3.5in) SC 3yr Wty HDD	765424-B21
	HPE 450GB SAS 12G Enterprise 15K LFF (3.5in) SCC 3yr Wty HDD	737394-B21
	HPE 300GB SAS 12G Enterprise 15K LFF (3.5in) SCC 3yr Wty HDD	737261-B21
	12G SAS Hot Plug SFF (2.5-inch) Enterprise Drives	
	HPE 1.2TB SAS 12G Enterprise 10K SFF (2.5in) SC 3yr Wty HDD	781518-B21
	HPE 900GB SAS 12G Enterprise 10K SFF (2.5in) SC 3yr Wty HDD	785069-B21
	HPE 600GB SAS 12G Enterprise 10K SFF (2.5in) SC 3yr Wty HDD	781516-B21
	HPE 300GB SAS 12G Enterprise 10K SFF (2.5in) SC 3yr Wty HDD	785067-B21
	12G SAS Hot Plug SFF (2.5-inch) SC 512e Drives	
	HPE 2TB SAS 12G Midline 7.2K SFF (2.5in) SC 1yr Wty 512e HDD	765466-B21
	HPE 1TB SAS 12G Midline 7.2K SFF (2.5in) SC 1yr Wty 512e Digitally Signed Firmware HDD	765464-B21
	HPE 1.8TB SAS 12G Enterprise 10K SFF (2.5in) SC 3yr Wty 512e HDD	791034-B21
	HPE 600GB SAS 12G Enterprise 15K SFF (2.5in) SC 3yr Wty 512e HDD	748387-B21
	HPE 6TB SAS 12G Midline 7.2K LFF (3.5in) SC 1yr Wty Helium 512e HDD	793699-B21

Core Options

12G SAS Hot Plug LFF (3.5-inch) Midline (MDL) 512e Drives	
HPE 6TB SAS 12G Midline 7.2K LFF (3.5in) SC 1yr Wty HDD	765259-B21
HPE 6TB SATA 6G Midline 7.2K LFF (3.5in) SC 1yr Wty HDD	765255-B21
HPE 4TB SAS 12G Midline 7.2K LFF (3.5in) SC 1yr Wty HDD	765257-B21
HPE 4TB SATA 6G Midline 7.2K LFF (3.5in) SC 1yr Wty HDD	765253-B21
12G SAS Hot Plug LFF (3.5-inch) SC 512e Performance Drives	
HPE 6TB SAS 12G Midline 7.2K LFF (3.5in) SC 1yr Wty 512e HDD	793671-B21
HP 4TB 12G SAS 7.2K rpm LFF (3.5-inch) SC 512e Performance 1yr Warranty Hard Drive	793669-B21
12G SAS Hot Plug LFF (3.5in) 7.2K MDL SC HDD	
HPE 4TB SAS 12G Midline 7.2K LFF (3.5in) SC 1yr Wty HDD	818367-B21
HPE 2TB SAS 12G Midline 7.2K LFF (3.5in) SC 1yr Wty HDD	818365-B21
6G SAS Hot Plug with SmartDrive SFF (2.5-inch) Enterprise Drives	
HP 1.2TB 6G SAS 10K rpm SFF (2.5-inch) SC Dual Port Enterprise 3yr Warranty Hard Drive	718162-B21
HP 900GB 6G SAS 10K rpm SFF (2.5-inch) SC Enterprise 3yr Warranty Hard Drive	652589-B21
HP 600GB 6G SAS 10K rpm SFF (2.5-inch) SC Enterprise 3yr Warranty Hard Drive	652583-B21
HP 450GB 6G SAS 10K rpm SFF (2.5-inch) SC Enterprise 3yr Warranty Hard Drive	652572-B21
HP 300GB 6G SAS 10K rpm SFF (2.5-inch) SC Enterprise 3yr Warranty Hard Drive	652564-B21
HP 300GB 6G SAS 15K rpm SFF (2.5-inch) SC Enterprise 3yr Warranty Hard Drive	652611-B21
HP 146GB 6G SAS 15K rpm SFF (2.5-inch) SC Enterprise 3yr Warranty Hard Drive	652605-B21
6G SAS Hot Plug SmartDrive SFF (2.5-inch) Midline Drives	
HPE 1TB 6G SAS 7.2K rpm SFF (2.5-inch) SC Midline 1yr Warranty Hard Drive	652749-B21
HPE 500GB 6G SAS 7.2K rpm SFF (2.5-inch) SC Midline 1yr Warranty Hard Drive	652745-B21
6G SAS Hot Plug SmartDrive LFF (3.5-inch) Midline Drives	
HP 6TB 6G SAS 7.2K rpm LFF (3.5-inch) SC Midline 1yr Warranty Hard Drive	761477-B21
HP 4TB 6G SAS 7.2K rpm LFF (3.5-inch) SC Midline 1yr Warranty Hard Drive	695510-B21
HP 3TB 6G SAS 7.2K rpm LFF (3.5-inch) SC Midline 1yr Warranty Hard Drive	652766-B21
HP 2TB 6G SAS 7.2K rpm LFF (3.5-inch) SC Midline 1yr Warranty Hard Drive	652757-B21
HP 1TB 6G SAS 7.2K rpm LFF (3.5-inch) SC Midline 1yr Warranty Hard Drive	652753-B21
12G SAS Hot Plug SFF (2.5-inch) Midline (MDL) Drives	
HPE 1TB SAS 12G Midline 7.2K SFF (2.5in) SC 1yr Wty Digitally Signed Firmware HDD	832514-B21
12G SAS SFF (2.5in) RI-3 SC Solid State Drives	
HPE 3.84TB SAS 12G Read Intensive SFF (2.5in) SC 3yr Wty SSD	816576-B21
HPE 1.92TB SAS 12G Read Intensive SFF (2.5in) SC 3yr Wty SSD	816572-B21

Core Options

HPE 960GB SAS 12G Read Intensive SFF (2.5in) SC 3yr Wty SSD	816568-B21
HPE 480GB SAS 12G Read Intensive SFF (2.5in) SC 3yr Wty SSD	816562-B21

12G SAS SFF (2.5in) MU-3 SC Solid State Drives

HPE 3.2TB SAS 12G Mixed Use SFF (2.5in) SC 3yr Wty SSD	822567-B21
HPE 1.6TB SAS 12G Mixed Use SFF (2.5in) SC 3yr Wty SSD	822563-B21
HPE 800GB SAS 12G Mixed Use SFF (2.5in) SC 3yr Wty SSD	822559-B21
HPE 400GB SAS 12G Mixed Use SFF (2.5in) SC 3yr Wty SSD	822555-B21

NOTE: Please see the QuickSpecs for Technical Specifications and additional information:
https://www.hpe.com/h20195/v2/GetHTML.aspx?docname=c04111744

6G SATA 2.5in SFF RI-3 SC Solid State Drives

HPE 3.84TB SATA 6G Read Intensive SFF (2.5in) SC 3yr Wty SSD	816929-B21
HPE 1.92TB SATA 6G Read Intensive SFF (2.5in) SC 3yr Wty SSD	816919-B21
HPE 960GB SATA 6G Read Intensive SFF (2.5in) SC 3yr Wty SSD	816909-B21
HPE 480GB SATA 6G Read Intensive SFF (2.5in) SC 3yr Wty SSD	816899-B21
HPE 240GB SATA 6G Read Intensive SFF (2.5in) SC 3yr Wty SSD	816889-B21
HPE 120GB SATA 6G Read Intensive SFF (2.5in) SC 3yr Wty SSD	816879-B21

6G SATA 2.5in SFF MU-3 SC Solid State Drives

HPE 1.92TB SATA 6G Mixed Use SFF (2.5in) SC 3yr Wty SSD	817011-B21
HPE 960GB SATA 6G Mixed Use SFF (2.5in) SC 3yr Wty SSD	816995-B21
HPE 480GB SATA 6G Mixed Use SFF (2.5in) SC 3yr Wty SSD	816985-B21
HPE 240GB SATA 6G Mixed Use SFF (2.5in) SC 3yr Wty SSD	816975-B21
HPE 120GB SATA 6G Mixed Use SFF (2.5in) SC 3yr Wty SSD	816965-B21

6G SATA Hot Plug with SmartDrive SFF (2.5-inch) Midline (MDL) Drives

HPE 1TB SATA 6G Midline 7.2K SFF (2.5in) SC 1yr Wty Digitally Signed Firmware HDD	655710-B21
HPE 500GB 6G SATA 7.2K rpm SFF (2.5-inch) SC Midline 1yr Warranty Hard Drive	655708-B21

6G SATA Hot Plug with SmartDrive LFF (3.5-inch) Midline (MDL) Drives

HPE 6TB SATA 6G Midline 7.2K LFF (3.5in) SC 1yr Wty Helium 512e HDD	793683-B21

Core Options

HP 6TB 6G SATA 7.2K rpm LFF (3.5-inch) SC Midline 1yr Warranty Hard Drive	753874-B21
HPE 4TB SATA 6G Midline 7.2K LFF (3.5in) SC 1yr Wty HDD	693687-B21
HP 3TB 6G SATA 7.2K rpm LFF (3.5-inch) SC Midline 1yr Warranty Hard Drive	628061-B21
HPE 2TB SATA 6G Midline 7.2K LFF (3.5in) SC 1yr Wty HDD	658079-B21
HPE 1TB SATA 6G Midline 7.2K LFF (3.5in) SC 1yr Wty HDD	657750-B21
HPE 500GB SATA 6G Midline 7.2k LFF (3.5in) SC 1yr Wty HDD	658071-B21
6G SATA Hot Plug RI-3 LFF (3.5-inch) SCC Solid State Drives	
HPE 3.84TB SATA 6G Read Intensive LFF (3.5in) SCC 3yr Wty SSD	816933-B21
HPE 1.92TB SATA 6G Read Intensive LFF (3.5in) SCC 3yr Wty SSD	816923-B21
HPE 960GB SATA 6G Read Intensive LFF (2.5in) SC 3yr Wty SSD	816913-B21
HPE 480GB SATA 6G Read Intensive LFF (3.5in) SCC 3yr Wty SSD	816903-B21
HPE 240GB SATA 6G Read Intensive LFF (3.5in) SCC 3yr Wty SSD	816893-B21
HPE 120GB SATA 6G Read Intensive LFF (3.5in) SCC 3yr Wty SSD	816883-B21
6G SATA Hot Plug MU-3 LFF(3.5-inch) SCC Solid State Drives	
HPE 1.92TB SATA 6G Mixed Use LFF (3.5in) SCC 3yr Wty SSD	817015-B21
HPE 960GB SATA 6G Mixed Use LFF (3.5in) SCC 3yr Wty SSD	816999-B21
HPE 480GB SATA 6G Mixed Use LFF (3.5in) SCC 3yr Wty SSD	816989-B21
HPE 240GB SATA 6G Mixed Use LFF (3.5in) SCC 3yr Wty SSD	816979-B21
HPE 120GB SATA 6G Mixed Use LFF (3.5in) SCC 3yr Wty SSD	816969-B21
6G SATA Non-hot Plug LFF (3.5-inch) Midline (MDL) Drives	
HPE 3TB 6G SATA 7.2K rpm LFF (3.5-inch) Non-hot plug Midline 1yr Warranty Hard Drive	628065-B21
HPE 2TB 6G SATA 7.2K rpm LFF (3.5-inch) Non-hot plug Midline 1yr Warranty Hard Drive	659339-B21
HPE 1TB SATA 6G Midline 7.2K LFF (3.5in) RW 1yr Wty HDD	659337-B21
HPE 500GB SATA 6G Midline 7.2K LFF (3.5in) RW 1yr Wty HDD	659341-B21
6G SATA Hot Plug SFF (2.5-inch) SC 512e Drives	
HPE 2TB SATA 6G Midline 7.2K SFF (2.5in) SC 1yr Wty 512e Digitally Signed Firmware HDD	765455-B21

Core Options

HPE 1TB SATA 6G Midline 7.2K SFF (2.5in) SC 1yr Wty 512e Digitally Signed Firmware HDD	765453-B21
6G SATA Hot Plug LFF (3.5-inch) SC 512e Performance Drives	
HP 6TB 6G SATA 7.2K rpm LFF (3.5-inch) SC 512e Performance 1yr Warranty Hard Drive	793667-B21
HP 4TB 6G SATA 7.2K rpm LFF (3.5-inch) SC 512e Performance 1yr Warranty Hard Drives	793665-B21
NOTE: Please see the QuickSpecs for Technical Specifications and additional information: https://www.hpe.com/h20195/v2/GetHTML.aspx?docname=c04111725	
12G SAS Mainstream Endurance Hot Plug SFF (2.5-inch) Enterprise Mainstream H2 Solid State Drives	
HPE 400GB SAS 12G Write Intensive SFF (2.5in) SC 3yr Wty SSD	779168-B21
HPE 200GB SAS 12G Write Intensive SFF (2.5in) SC 3yr Wty SSD	779164-B21
12G SAS Hot Plug SFF (2.5-inch) SC Write Intensive Solid State Drives	
HPE 200GB SAS 12G Write Intensive SFF (2.5in) SC 3yr Wty SSD	802578-B21
HPE 400GB SAS 12G Write Intensive SFF (2.5in) SC 3yr Wty SSD	802582-B21
HPE 800GB SAS 12G Write Intensive SFF (2.5in) SC 3yr Wty SSD	802586-B21
6G SATA Value Endurance Hot Plug SFF (2.5-inch) Enterprise Boot Solid State Drives	
HP 120GB 6G SATA Value Endurance SFF 2.5-in SC Enterprise Boot 3yr Wty Solid State Drive	717965-B21
HP 80GB 6G SATA Value Endurance SFF 2.5-in SC Enterprise Boot 3yr Wty Solid State Drive	734360-B21
6G SATA 2.5in WI-PLP SCC SSD	
HPE 1.2TB SATA 6G Write Intensive LFF (3.5in) SCC 3yr Wty SSD	804680-B21
HPE 800GB SATA 6G Write Intensive LFF (3.5in) SCC 3yr Wty SSD	804674-B21
HPE 400GB SATA 6G Write Intensive LFF (3.5in) SCC 3yr Wty SSD	804668-B21
HPE 200GB SATA 6G Write Intensive LFF (3.5in) SCC 3yr Wty SSD	804642-B21
HPE 800GB SATA 6G Write Intensive LFF (3.5in) SCC 3yr Wty SSD	831725-B21
6G SATA 2.5in MU-PLP SCC SSD	
HPE 1.6TB SATA 6G Mixed Use LFF (3.5in) SCC 3yr Wty SSD	804634-B21
HPE 800GB SATA 6G Mixed Use LFF (3.5in) SCC 3yr Wty SSD	804628-B21
HPE 480GB SATA 6G Mixed Use LFF (3.5in) SCC 3yr Wty SSD	832417-B21

Core Options

HPE 200GB SATA 6G Mixed Use LFF (3.5in) SCC 3yr Wty SSD	804616-B21
6G SATA 2.5in RI-PLP SCC SSD	
HPE 1.6TB SATA 6G Read Intensive LFF (3.5in) SCC 3yr Wty SSD	804608-B21
HPE 800GB SATA 6G Read Intensive LFF (3.5in) SCC 3yr Wty SSD	804602-B21
HPE 480GB SATA 6G Read Intensive LFF (3.5in) SCC 3yr Wty SSD	804596-B21
HPE 240GB SATA 6G Read Intensive LFF (3.5in) SCC 3yr Wty SSD	804590-B21
HPE 120GB SATA 6G Read Intensive LFF (3.5in) SCC 3yr Wty SSD	804584-B21
HPE 80GB SATA 6G Read Intensive LFF (3.5in) SCC 3yr Wty SSD	804578-B21
6G SATA 2.5in WI-PLP SC SSD	
HPE 1.2TB SATA 6G Write Intensive SFF (2.5in) SC 3yr Wty SSD	804677-B21
HPE 800GB SATA 6G Write Intensive SFF (2.5in) SC 3yr Wty SSD	804671-B21
HPE 400GB SATA 6G Write Intensive SFF (2.5in) SC 3yr Wty SSD	804665-B21
HPE 200GB SATA 6G Write Intensive SFF (2.5in) SC 3yr Wty SSD	804639-B21
6G SATA 2.5in MU-PLP SC SSD	
HPE 1.6TB SATA 6G Mixed Use SFF (2.5in) SC 3yr Wty SSD	804631-B21
HPE 800GB SATA 6G Mixed Use SFF (2.5in) SC 3yr Wty SSD	804625-B21
HPE 480GB SATA 6G Mixed Use SFF (2.5in) SC 3yr Wty SSD	832414-B21
HPE 200GB SATA 6G Mixed Use SFF (2.5in) SC 3yr Wty SSD	804613-B21
6G SATA 2.5in RI-PLP SC SSD	
HPE 1.6TB SATA 6G Read Intensive SFF (2.5in) SC 3yr Wty SSD	804605-B21
HPE 800GB SATA 6G Read Intensive SFF (2.5in) SC 3yr Wty SSD	804599-B21
HPE 480GB SATA 6G Read Intensive SFF (2.5in) SC 3yr Wty SSD	804593-B21
HPE 240GB SATA 6G Read Intensive SFF (2.5in) SC 3yr Wty SSD	804587-B21
HPE 120GB SATA 6G Read Intensive SFF (2.5in) SC 3yr Wty SSD	804581-B21
HPE 80GB SATA 6G Read Intensive SFF (2.5in) SC 3yr Wty SSD	804575-B21
6G SATA Value Endurance Hot Plug LFF (3.5-inch) Enterprise Boot Solid State Drives	
HP 120GB 6G SATA Value Endurance LFF 3.5-in SC Enterprise Boot 3yr Wty Solid	718171-B21

Core Options

State Drive	
HP 80GB 6G SATA Value Endurance LFF 3.5-in SC Enterprise Boot 3yr Wty Solid State Drive	734362-B21
6G SATA Hot Plug Value Endurance LFF (3.5-inch) Converter Enterprise Value G1 Solid State Drives	
HP 480GB 6G SATA Value Endurance LFF 3.5-in SC Converter ENT Value 3yr Wty G1 Solid State Drive	756660-B21
6G SATA Hot Plug Value Endurance SFF (2.5-inch) Enterprise Value G1 Solid State Drives	
HP 480GB 6G SATA Value Endurance SFF 2.5-in SC Enterprise Value 3yr Wty G1 Solid State Drive	756657-B21
6G SATA Value Endurance Hot Plug SFF (2.5-inch) Enterprise Value Solid State Drives	
HP 1.6TB 6G SATA Value Endurance SFF 2.5-in SC Enterprise Value 3yr Wty Solid State Drive	757339-B21
HP 800GB 6G SATA Value Endurance SFF 2.5-in SC Enterprise Value 3yr Wty Solid State Drive	717973-B21
HP 480GB 6G SATA Value Endurance SFF 2.5-in SC Enterprise Value 3yr Wty Solid State Drive	717971-B21
HP 240GB 6G SATA Value Endurance SFF 2.5-in SC Enterprise Value 3yr Wty Solid State Drive	717969-B21
6G SATA Value Endurance Hot Plug LFF (3.5-inch) Enterprise Value Solid State Drives	
HP 1.6TB 6G SATA Value Endurance LFF 3.5-in SC Converter Enterprise Value 3yr Wty Solid State Drive	757342-B21
HP 800GB 6G SATA Value Endurance LFF 3.5-in SC Enterprise Value 3yr Wty Solid State Drive	718189-B21
HP 480GB 6G SATA Value Endurance LFF 3.5-in SC Enterprise Value 3yr Wty Solid State Drive	718183-B21
HP 240GB 6G SATA Value Endurance LFF 3.5-in SC Enterprise Value 3yr Wty Solid State Drive	718177-B21
6G SATA Value Endurance Hot Plug SFF (2.5-inch) Enterprise Value M1 Solid State Drive	
HPE 800GB SATA 6G Read Intensive SFF (2.5in) SC 3yr Wty SSD	764929-B21
HPE 480GB SATA 6G Read Intensive SFF (2.5in) SC 3yr Wty SSD	764927-B21
HPE 240GB SATA 6G Read Intensive SFF (2.5in) SC 3yr Wty SSD	764925-B21
HPE 120GB SATA 6G Read Intensive SFF (2.5in) SC 3yr Wty SSD	764923-B21
6G SATA Hot Plug SFF (2.5-inch) SC Read Intensive Solid State Drives	
HP 480GB 6G SATA Read Intensive SFF 2.5-in SC 3yr Wty Solid State Drive	789145-B21
6G SATA Hot Plug LFF (3.5-inch) SC Read Intensive Solid State Drives	
HP 480GB 6G SATA Read Intensive LFF 3.5-in SC Converter 3yr Wty Solid State Drive	789147-B21

NOTE: Please see the QuickSpecs for Technical Specifications and additional information:

Core Options

https://www.hpe.com/h20195/v2/GetHTML.aspx?docname=c04154378

Hard Drive Kits

NOTE: All Factory Integrated Models will be populated with sufficient hard drive blanks based on the number of initial hard drives ordered with the server.

NOTE: The part numbers for single HDD blanks below are provided should the customer require replacement HDD blanks for their server

HPE Large Form Factor Hard Drive Blank Kit	666986-B21
HPE Small Form Factor Hard Drive Blank Kit	666987-B21

HPE Networking

Gigabit Ethernet adapters

HPE NC365T 4-port Ethernet Server Adapter	593722-B21
HPE Ethernet 1Gb 4-port 331T Adapter	647594-B21
HPE Ethernet 1Gb 2-port 332T Adapter	615732-B21
HPE Ethernet 1Gb 2-port 361T Adapter	652497-B21

10 Gigabit Ethernet adapters

HP NC523SFP 10Gb 2-port Server Adapter	593717-B21
HP NC552SFP 10Gb 2-port Ethernet Server Adapter	614203-B21
HPE Ethernet 10Gb 2-port 560SFP+ Adapter	665249-B21

NOTE: Please see the QuickSpecs for Technical Specifications and additional information: http://www.hp.com/go/ProLiantNICs

Switches

HPE PS1810-24G Switch	J9834A

NOTE: Please see the QuickSpecs for Technical Specifications and additional information: https://www.hpe.com/h20195/v2/GetHTML.aspx?docname=c04111385

HPE Power Supplies

NOTE: Mixing of power supplies in the same server is not supported. All power supplies inside a server must be exactly the same model. Mixing Gold, Platinum, and Platinum Plus certified power supplies is not supported.

NOTE: Prior to making a power supply selection it is highly recommended that the HPE Power Advisor is run to determine the right size power supply for your server configuration. The HPE Power Advisor is located at: http://www.hp.com/go/hppoweradvisor.

HPE Common Slot Gold Power Supplies

NOTE: The following Power Supplies offer 92% Efficiency.

HPE 460W Common Slot Gold Hot Plug Power Supply Kit	503296-B21

NOTE: Option Kits for AC power supplies include the power supply and one PDU IEC cable.

NOTE: Power Specification and Technical Content for supported power supplies

Core Options

can be found at:
https://www.hpe.com/h20195/v2/GetHTML.aspx?docname=c04111541

Additional Options

NOTE: Some options may not be integrated at the factory. To ensure only valid configurations are ordered, Hewlett Packard Enterprise recommends the use of a Hewlett Packard Enterprise approved configurator. Contact your local sales representative for additional information.

HPE Insight Software

HPE Insight Control

HPE Insight Control including 1yr 24x7 Technical Support and Updates 1-server LTU	C6N27A
HPE Insight Control including 1yr 24x7 TSU E-LTU	C6N28ABE
HP Insight Control Server Provisioning Media Kit	BD883A
HPE Insight Management Media Kit	C6N31A

NOTE: Electronic and Flexible-Quantity licenses can be used to purchase multiple licenses with a single activation key.
NOTE: Customer will receive a license entitlement certificate. The license entitlement certificate must be redeemed online or via fax in order to obtain the license activation key(s). Includes one year of 24 x 7 HPE Software Technical Support and Update Service.
NOTE: Licenses ship without media. The HPE Insight Control Media Kit can be ordered separately, or can be downloaded at: http://www.hp.com/go/insightupdates.
NOTE: For additional license options please see the QuickSpecs at: https://www.hpe.com/h20195/v2/GetHTML.aspx?docname=c04123391

HPE Integrated Lights-Out (iLO)

HPE iLO Essentials

HPE iLO Essentials including 3yr 24x7 Technical Support and Updates E-LTU NOTE:NOTE: The Electronic software license is available in EMEA only.	E6U61ABE
HPE iLO Essentials including 1yr 24x7 Technical Support and Updates E-LTU	E6U62ABE
HPE iLO Essentials including 3yr 24x7 Tech Support and Updates 1-server LTU	BD774A
HPE iLO Essentials including 1yr 24x7 Tech Support and Updates 1-server LTU	BD775A

HPE Integrated Lights-Out (iLO) Advanced for ProLiant

HPE iLO Advanced including 1yr 24x7 Technical Support and Updates E-LTU	E6U59ABE
HPE iLO Advanced including 3yr 24x7 Technical Support and Updates E-LTU	E6U64ABE
HPE iLO Advanced including 1yr 24x7 Technical Support and Updates 1-server LTU	512485-B21
HPE iLO Advanced including 3yr 24x7 Tech Support and Updates 1-server LTU	BD505A
HPE iLO Advanced including 3yr 24x7 Tech Support and Updates Flexible Quantity LTU	BD506A
HPE iLO Advanced including 3yr 24x7 Tech Support and Updates Tracking LTU	BD507A

Additional Options

	HPE iLO Advanced including 1yr 24x7 Technical Support and Updates Flexible Quantity LTU	512486-B21
	HPE iLO Advanced including 1yr 24x7 Technical Support and Updates Tracking LTU	512487-B21
	NOTE: For additional license kits, including electronic delivery options, please see the QuickSpecs at: https://www.hpe.com/h20195/v2/GetHTML.aspx?docname=c04154343 **NOTE: For more information, visit: http://www.hp.com/go/ilo.**	
High Performance Clusters	**HPE Cluster Management Utility**	
	HPE Insight Cluster Management Utility Media	BD477A
	HPE Insight Cluster Management Utility 3yr 24x7 Flexible LTU	BD476A
	HPE Insight Cluster Management Utility 1yr 24x7 Flexible LTU	QL803B
	NOTE: For additional license kits please see the QuickSpecs at https://www.hpe.com/h20195/v2/GetHTML.aspx?docname=c04111735	
HPE Security	HPE Trusted Platform Module Option	488069-B21
	NOTE: The TPM (Trusted Platform Module) is a microcontroller chip that can securely store artifacts used to authenticate the server platform. These artifacts can include passwords, certificates and encryption keys. Windows® BitLocker™ Drive Encryption (BitLocker) is a data protection feature available in Windows Server® 2008. BitLocker leverages the enhanced security capabilities of a Trusted Platform Module (TPM) version 1.2. The TPM works with BitLocker to help protect user data and to ensure that a server running Windows Server 2008 has not been tampered with while the system was offline. For more information about TPM, including a white paper, go to: http://www.hp.com/go/TPM. **NOTE: ProLiant OS pre-installed units will come with the partition required for TPM deployment.** **NOTE: The TPM key is unique to every TPM deployed server and must be retained. Misplacing or losing the key could result in data loss.**	
HPE Storage Controllers	**SAS Controllers**	
	NOTE: Smart Array Storage controller can be added only in PCIe Slot 3, Slot 4 or both.	
	HPE Smart Array P222 Controller	
	HPE Smart Array P222/512 FBWC 6Gb 1-port Int/1-port Ext SAS Controller	631667-B21
	HPE Smart Array P420 Controller	
	HPE Smart Array P420/2GB FBWC 6Gb 2-ports Int SAS Controller	631671-B21
	HPE Smart Array P420/1GB FBWC 6Gb 2-ports Int SAS Controller	631670-B21

Additional Options

HPE Smart Array P421 Controller

HP Smart Array P421/2GB FBWC 6Gb 2-ports Ext SAS Controller	631674-B21
HP Smart Array P421/1GB FBWC 6Gb 2-ports Ext SAS Controller	631673-B21

Optional Upgrades

HPE 2GB P-series Smart Array Flash Backed Write Cache	631681-B21
HPE Smart Array SR SmartCache (Single Key/Single Server) LTU	D7S26A
HPE Smart Array SR SmartCache (Single Key/Multiple Servers) LTU	D7S27A
HPE Smart Array SR SmartCache (Single Key/Multiple Servers) E-LTU	D7S27AAE

NOTE: **Please see the QuickSpecs for Technical Specifications and additional information:**
https://www.hpe.com/h20195/v2/GetHTML.aspx?docname=c04111474
(Smart Array P222 Controller)
https://www.hpe.com/h20195/v2/GetHTML.aspx?docname=c04111533
(Smart Array P421 Controller)
https://www.hpe.com/h20195/v2/GetHTML.aspx?docname=c04111365
(Smart Array P431 Controller)

HPE Host Bus Adapters

HP H220 Host Bus Adapter	650933-B21
HPE H221 PCIe 3.0 SAS Host Bus Adapter	729552-B21
HPE H222 Host Bus Adapter	650926-B21
HP SC11Xe Ultra320 Single Channel/ PCIe x4 SCSI Host Bus Adapter	412911-B21

NOTE: **Please see the QuickSpecs for Technical Specifications and additional information:**
https://www.hpe.com/h20195/v2/GetHTML.aspx?docname=c04111455
(HBA H220)
https://www.hpe.com/h20195/v2/GetHTML.aspx?docname=c04111475
(HBA 221)
https://www.hpe.com/h20195/v2/GetHTML.aspx?docname=c04111514
(HBA 222)

HPE Tape Backup

NOTE: **For the complete range of tape drives, autoloaders, libraries and media see: http://www.hp.com/go/tape. For hardware and software compatibility of HPE tape backup products see: http://www.hp.com/storage/SPOCK and http://www.hp.com/go/ebs.**

HPE StoreEver LTO-7 Ultrium 15000 External Tape Drive	BB874A
HPE StoreEver LTO-6 Ultrium 6250 Tape Drive in a 1U Rack Mount Kit	C0L99A
HPE StoreEver LTO-6 Ultrium 6650 SAS Internal Tape Drive	EH963A
HPE StoreEver LTO-6 Ultrium 6650 SAS External Tape Drive	EH964A
HPE StoreEver LTO-6 Ultrium 6250 Internal Tape Drive	EH969A

Additional Options

	HPE StoreEver LTO-6 Ultrium 6250 External Tape Drive	EH970A
	HPE StoreEver 1/8 G2 LTO-6 Ultrium 6250 Fibre Channel Tape Autoloader	C0H19A
	HPE StoreEver LTO-5 Ultrium 3000 SAS Internal Tape Drive	EH957B
HPE Tape Storage Systems	**HPE StoreEver MSL6480**	
	HPE StoreEver MSL6480 Scalable Base Module	QU625A
	NOTE: Please see the QuickSpecs for Technical Specifications and additional information: https://www.hpe.com/h20195/v2/GetHTML.aspx?docname=c04111416	
HPE Disk Backup	**NOTE: For the complete range of RDX drives and media see: http://www.hp.com/go/rdx. For hardware and software compatibility of HPE disk backup products see: http://www.hp.com/storage/SPOCK.**	
	HPE RDX Removable Disk Backup System	
	HPE RDX 2TB USB3.0 External Disk Backup System	E7X53B
	HPE RDX 2TB USB3.0 Internal Disk Backup System	E7X52A
	HP RDX+ 1TB External Backup System	B7B69B
	HP RDX+ 500GB External Backup System	B7B66B
	HPE RDX500 USB3.0 Internal Disk Backup System	B7B64A
	HPE RDX1000 USB3.0 Internal Disk Backup System	B7B67A
	HPE RDX+ External Docking System	C8S07B
	NOTE: Please see the QuickSpecs for additional part numbers, Technical Specifications, and additional information: https://www.hpe.com/h20195/v2/GetHTML.aspx?docname=c04111633	
HPE Disk Storage Systems	**Disk Enclosures**	
	HP D2600 w/12 4TB 6G SAS 7.2K LFF Dual Port MDL HDD 48TB Bundle	E7W32A
	NOTE: Please see the QuickSpecs for Technical Specifications and additional information: https://www.hpe.com/h20195/v2/GetHTML.aspx?docname=c04111697	
HPE Uninterruptible Power Systems	**HPE DirectFlow Three Phase UPS**	
	Power Unit (1U UPS)	
	HPE R12000 DirectFlow - 1U Rackmount Uninterruptible Power System	G9Y75A
	HPE R12000 DirectFlow - POD 1U Rackmount Uninterruptible Power System	AF478A
	Input/Output Module Options for 1U UPS	

Additional Options

NOTE: Choose one I/O Module per UPS.

HPE 30A 400-415 Volt Three Phase NA R10000 DirectFlow UPS IEC309 Input/Output Module	AF489A
HPE 30A 480 Volt Three Phase NA R12000 DirectFlow UPS L22-30 Input/Output Module	AF491A
HPE 30A 480 Volt Three Phase NA R12000 DirectFlow UPS IEC309 Input/Output Module	AF492A
HPE 30A 400-415 Volt Three Phase NA R12000 DirectFlow UPS IEC309 Input/Output Module	G9Y76A

NOTE: All Input/Output Modules support dual output outlets except the AF484A.

HPE Tower UPS

HPE T750 G4 UPS Models

HPE T750 G4 NA/JP Uninterruptible Power System	J2P85A

HPE T1000 G4 UPS Models

HPE T1000 G4 NA/JP Uninterruptible Power System	J2P86A

HPE T1500 G4 UPS Models

HPE T1500 G4 NA/JP Uninterruptible Power System	J2P87A

HPE Rack/Tower UPS

HPE R/T2200 G4 UPS Models

HPE R/T2200 G4 NA/JP Uninterruptible Power System	J2R00A

HPE R/T3000 G4 UPS Models

HPE R/T3000 G4 Low Voltage NA/JP Uninterruptible Power System	J2R01A
HPE R/T3000 G4 High Voltage NA/JP Uninterruptible Power System	J2R02A

HPE Rack-mountable UPS

HPE R1500 G4 Uninterruptible Power Supply (UPS)

HPE R1500 G4 NA Uninterruptible Power System	J2Q99A

NOTE: Please see the QuickSpecs for additional information:
https://www.hpe.com/h20195/v2/GetHTML.aspx?docname=c04155328

R5000 Uninterruptible Power System (UPS)

HPE R5000 3U L630 High Voltage NA/JP Uninterruptible Power System	AF460A

NOTE: Please see the QuickSpecs for additional information:
https://www.hpe.com/h20195/v2/GetHTML.aspx?docname=c04155299

Additional Options

R7000 Uninterruptible Power System (UPS)

HPE R7000 4U 50A High Voltage NA/JP Uninterruptible Power System	AF462A

NOTE: Please see the QuickSpecs for additional information: https://www.hpe.com/h20195/v2/GetHTML.aspx?docname=c04155297

NOTE: For additional information on sizing your server, please reference: http://www.upssizer.com.

NOTE: Please see the UPS and PDU cable matrix's on the HPE Power Protection and Management page. Under Power Cords, click on the "HPE Power Cord Matrix" link. That link will list cable descriptions, requirements, and specifications for UPS and PDU units. Please see the following link: http://www.hp.com/products/powercords.

NOTE: For additional information on HPE Uninterruptible Power Systems please go to: http://www.hp.com/servers/rackups.

HPE Basic Power Distribution Units (PDU)

HPE Basic Power Distribution Unit: 1U/0U Version

HPE Basic 1.9kVA/L5-20P 16A/120V Outlets (12) 5-20R/Horizontal NA/JP PDU	H5M54A
HPE Basic 3.6kVA/60320 C20 Detachable 16A/230V Outlets (12) C13/Horizontal WW PDU	H5M56A

HPE Basic Power Distribution Unit: Half Height Version

HPE Basic 2.8kVA/L5-30P 24A/120V Outlets (18) 5-20R/Vertical NA/JP PDU	H5M55A
HPE Basic 4.9kVA/60320 C20 Detachable 16A/230V Outlets (20) C13/Vertical WW PDU	H5M57A
HPE Basic 4.9kVA/L6-30P 24A/208V Outlets (20) C13/Vertical NA/JP PDU	H5M58A
HPE Basic 3Ph 8.6kVA/L15-30P 24A/208V Outlets (18) C13/Vertical NA/JP PDU	H5M61A

HPE Basic Power Distribution Unit: Mid Height Version

HPE Basic 4.9kVA/L6-30P 24A/208V Outlets (24) C13 (6) C19/Vertical NA/JP PDU	H5M59A
HPE Basic 8.3kVA/CS8265C 40A/208V Outlets (30) C13 (6) C19/Vertical NA PDU	H5M60A
HPE Basic 9.2kVA/50A Terminal Block 40A/230V Outlets (30) C13 (6) C19/Vertical WW PDU	H5M75A
HPE Basic 3Ph 5.7kVA/ L21-20P 16A/120-208V Outlets (24) C13 (3) 5-20R/Vertical NA/JP PDU	H5M63A
HPE Basic 3Ph 8.6kVA/L21-30P 24A/120-208V Outlets (24) C13 (3) C19 (3) 5-20R/Vertical NA/JP PDU	H5M64A
HPE Basic 3Ph 8.6kVA/L15-30P 24A/208V Outlets (24) C13 (6) C19/Vertical NA/JP PDU	H5M62A

HPE Basic Power Distribution Unit: Full Height Version

Additional Options

	HPE Basic 3Ph 11kVA/60309 16A/240V Outlets (36) C13 (6) C19/Vertical NA PDU	H5M67A
	HPE Basic Power Distribution Unit: 480/277 Volt Version	
	HPE 800VA - 277V Input / 230V Output NA Rack Mount Transformer	H3X09A
	NOTE: Please see the QuickSpecs for additional information: https://www.hpe.com/h20195/v2/GetHTML.aspx?docname=c04111250	
	NOTE: Additional HPE Power Distribution Units are available. For a complete list of all HPE PDUs and additional information please visit http://www.hp.com/go/rackandpower.	
HPE Metered Power Distribution Units (PDU)	**HPE Remote Monitored Power Distribution Unit: 1U Version**	
	HPE Metered 2.8kVA/L5-30P 24A/120V Outlets (12) 5-20R/Horizontal NA/JP PDU	D9N43A
	HPE Metered 3.6kVA/60320 C20 Detachable 16A/230V Outlets (12) C13/Horizontal WW PDU	D9N46A
	HPE Metered 4.9kVA/L6-30P 24A/208V Outlets (12) C13/Horizontal NA/JP PDU	D9N44A
	HPE Remote Monitored Power Distribution Unit: Half Height Version	
	HPE Metered 3.6kVA/60320 C20 Detachable 16A/230V Outlets (16) C13/Vertical WW PDU	D9N45A
	HPE Metered 4.9kVA/L6-30P 24A/208V Outlets (12) C13/Vertical NA/JP PDU	G9Z05A
	HPE Remote Monitored Power Distribution Unit: Mid Height Version	
	HPE Metered 4.9kVA/L6-30P 24A/208V Outlets (20) C13 (4) C19/Vertical NA/JP PDU	D9N47A
	HPE Metered 3Ph 8.6kVA/L15-30P 24A/208V Outlets (18) C13 (3) C19/Vertical NA/JP PDU	D9N51A
	HPE Metered 3Ph 5.7kVA/L21-20P 16A/120-208V Outlets (13) C13 (3)5-20R/Vertical NA/JP PDU	D9N52A
	HPE Metered 3Ph 8.6kVA/L21-30P 24A/120-208V Outlets (18) C13 (3) C19 (3) 5-20R/Vertical NA/JP PDU	D9N53A
	HPE Remote Monitored Power Distribution Unit: Full Height Version	
	HPE Metered 8.3kVA/CS8265C 40A/208V Outlets (30) C13 (3) C19/Vertical NA PDU	D9N49A
	HPE Metered 3Ph 14.4kVA/CS8365C 40A/208V Outlets (12) C13 (12) C19/Vertical NA/JP PDU	D9N58A
	HPE Metered 3Ph 16.6kVA/60309 32A-30A 5-wire 24A/230V Outlets (30) C13 (3) C19/Vertical NA/JP PDU	D9N61A
	HPE Metered 3Ph 17.3kVA/60309 60A 4-wire 48A/208V Outlets (24) C13 (3) C19/Vertical NA/JP PDU	D9N54A

Additional Options

	HPE Metered 3Ph 17.3kVA/60309 60A 4-wire 48A/208V Outlets (12) C13 (12) C19/Vertical NA/JP PDU	D9N59A
	HPE Metered 3Ph 16.6kVA/60309 32A-30A 5-wire 24A/230V Outlets (12) C13 (12) C19/Vertical NA/JP PDU	D9N62A
	HPE Metered 3Ph 19.9kVA/L22-30P 24A/277V Outlets (30) RF-203P-HP/Vertical NA PDU	D9N63A
	HPE Environmental Sensor for Remote Monitored PDUs	
	HP Environmental Sensor for Remote Monitored and Managed PDUs	E2D53A
	NOTE: Please see the QuickSpecs for additional information: https://www.hpe.com/h20195/v2/GetHTML.aspx?docname=c04229513	
HPE Intelligent Power Distribution Unit (PDU)	**iPDU Core Units**	
	HPE Intelligent Modular 4.9kVA/L6-30P 24A/208V Outlets (6) C19/Horizontal NA/JP PDU	AF520A
	HPE Intelligent Modular 8.3kVA/CS8265C 40A/208V Outlets (6) C19/Horizontal NA/JP PDU	AF521A
	HPE Intelligent Modular 3Ph 8.6kVA/L15-30P 24A/208V Outlets (6) C19/Horizontal NA/JP PDU	AF522A
	HPE Intelligent Modular 3Ph 14.4kVA/CS8365C 40A/208V Outlets (6) C19/Horizontal NA/JP PDU	AF533A
	HPE Intelligent Modular 3Ph 17.3kVA/60309 60A 4-wire 48A/208V (6) C19/Horizontal NA/JP PDU	AF523A
	HPE Intelligent Modular 3Ph 17.3kVA/IEC 60309 60A 4-wire 48A/208V (12) C19/Horizontal NA/JP PDU	AF535A
	HPE Intelligent Modular 3Ph 17.3kVA/IEC 60309 30A 5-wire 24A/240V (12) C19/Horizontal NA/JP PDU	AF537A
	iPDU Kits with Standard Extension Bars	
	HPE Intelligent Modular 4.9kVA/L6-30P 24A/208V Outlets (20) C13 (6) C19/Horizontal NA/JP PDU	AF531A
	HPE Intelligent Modular 3Ph 8.6kVA/L15-30P 24A/208V Outlets (20) C13 (6) C19/Horizontal NA/JP PDU	AF532A
	iPDU Extension Bars	
	HPE 5xC13 Intelligent PDU Extension Bar G2 Kit	AF547A
	HPE 5xC13 Outlets Power and UID LEDs Pair Standard Extension Bar	AF528A
	NOTE: Please see the QuickSpecs for Technical Specifications and additional information:	

Additional Options

	https://www.hpe.com/h20195/v2/GetHTML.aspx?docname=c04128194	
HPE Metered and Switched Power Distribution Units (PDU)	**Half Height Models**	
	HPE Metered Switched 3.6kVA/60320 C20 Detachable 16A/230V Outlets (7) C13 (1) C19/Vertical WW PDU	H8B49A
	Full Height Models	
	HPE Metered Switched 2.8kVA/L5-30P 24A/120V Outlets (24) 5-20R /Vertical NA/JP PDU	H8B48A
	HPE Metered Switched 4.9kVA/L6-30P 24A/208V Outlets (20) C13 (4) C19/Vertical NA/JP PDU	H8B50A
	HPE Metered Switched 3Ph 8.6kVA/L15-30P 24A/208V Outlets (18) C13 (6) C19/Vertical NA/JP PDU	H8B52A
	HPE Metered Switched 3Ph 8.6kVA/L21-30P 24A/208V Outlets (20)C13 (3)C19 (1)5-20R/Vertical NA/JP PDU	H8B53A
	HPE Metered Switched 3Ph 14.4kVA/CS8365C 40A/208V Outlets (12) C13 (12) C19/Vertical NA/JP PDU	H8B55A
	HPE Metered Switched 3Ph 17.3kVA/60309 4-wire 48A/208V Outlets (12) C13 (12) C19/Vertical NA/JP PDU	H8B56A
	NOTE: Please see the QuickSpecs for Technical Specifications and additional information: https://www.hpe.com/h20195/v2/GetHtml.aspx?docname=c04376687	
HPE Rack Series	**HPE Intelligent Series Rack**	
	HPE 42U 600mm x 1075mm Enterprise Pallet Rack	BW903A
	HP 42U 600mm x 1075mm Enterprise Shock Rack	BW904A
	NOTE: Please see the QuickSpecs for Technical Specifications such as height, width, depth, weight, and color: https://www.hpe.com/h20195/v2/GetHTML.aspx?docname=c04128240 **NOTE: For additional information regarding Rack Cabinets, please see the following URL: http://www.hp.com/go/rackandpower.**	
HPE Rack Options	**HPE LCD8500 1U Rackmount Console Kit Models**	
	HP LCD8500 1U US Rackmount Console Kit	AF630A
	HP LCD8500 1U US TAA Rackmount Console Kit	AF645A
	HPE LCD8500 1U Rackmount Console Kit Options	
	HP Kit LCD 1.83m Latch Display Port Cable	G7T29A
	HPE Location Discovery Services LCD8500 Kit	TL052A
	HPE Rack LED Light Kit	BW939A

Additional Options

NOTE: Please see the QuickSpecs for Technical Specifications and additional information:
https://www.hpe.com/h20195/v2/GetHTML.aspx?docname=c04154398

HPE USB Keyboard and Mouse

HPE USB US Keyboard/Mouse Kit	631341-B21

NOTE: Please see the QuickSpecs for Technical Specifications and additional information:
https://www.hpe.com/h20195/v2/GetHTML.aspx?docname=c04168349

HPE Server Console Switches

HP 0x1x8 G3 KVM Console Switch	AF651A
HP 0x2x16 G3 KVM Console Switch	AF652A
HP TAA 0x2x16 G3 KVM Console Switch	AF653A
HP USB Remote Access Key for G3 KVM Console Switches	AF650A

NOTE: Please see the QuickSpecs for Technical Specifications and additional information:
https://www.hpe.com/h20195/v2/GetHTML.aspx?docname=c04128391

HPE Server Console Switch G2 with Virtual Media & CAC

HP 0x2x16 KVM Server Console Switch G2 with Virtual Media CAC Software	AF618A
HP 0x2x32 KVM Server Console Switch G2 with Virtual Media CAC Software	AF619A

NOTE: Please see the QuickSpecs for Technical Specifications and additional information:
https://www.hpe.com/h20195/v2/GetHTML.aspx?docname=c04168373

HPE IP Console Switch G2 with Virtual Media & CAC

HP 1x4 USB/PS2 KVM Console Switch	AF611A
HP 1x1Ex8 KVM IP Console Switch G2 with Virtual Media CAC Software	AF620A
HP 2x1Ex16 KVM IP Console Switch G2 with Virtual Media CAC Software	AF621A
HP 4x1Ex32 KVM IP Console Switch G2 with Virtual Media CAC Software	AF622A

NOTE: Please see the QuickSpecs for Technical Specifications and additional information:
https://www.hpe.com/h20195/v2/GetHTML.aspx?docname=c04230853

HPE USB and SD Options

HPE Flash Media Kits for USB Drives

NOTE: Hewlett Packard Enterprise qualified blank USB key for use with HPE ProLiant servers that support the VMware virtualization environment and other Hewlett Packard Enterprise value-add software. Hewlett Packard Enterprise recommends this industry standard USB flash device for use with VMware ESXi. USB device must be installed in the internal slot of the ProLiant server for use with VMware ESXi. Refer to HPE VMware Getting Started Guide for installation instructions.

HPE 8GB USB Enterprise Mainstream Flash Media Drive Key Kit	737953-B21

HPE Enterprise Mainstream Flash Media Kits for Memory Cards

HPE 8GB microSD Enterprise Mainstream Flash Media Kit	726116-B21

NOTE: Please see the QuickSpecs for Technical Specifications and additional

Additional Options

information:
https://www.hpe.com/h20195/v2/GetHTML.aspx?docname=c04123175

HPE Pointnext operational services	**Proactive Care**	
	NOTE: Collaborative Support plus Proactive services delivered by the onshore, local language Advanced Solution Center (ASC), end-to-end case ownership from a Technical Solution Specialists and Technical Account Manager who remotely delivers firmware/software revision management, proactive scans and incident trend reports. Recommended for customers running a virtualized infrastructure and/or customers who desire an enhanced call support experience.	
	HPE 3 year Proactive Care 24x7 ProLiant ML310e Service	U6F73E
	HPE 3 year Proactive Care 24x7 with DMR ProLiant ML310e Service	U6F74E
	HPE 3 year Proactive Care 24x7 with CDMR ML310e Service	U9E08E
	Foundation Care	
	HPE 3 year Foundation Care 24x7 ML310e Service	U2FR3E
	HPE 3 year Foundation Care 24x7 wCDMR ML310e Service	U2FR5E
	HPE 3 year Foundation Care 24x7 wDMR ML310e Service	U2FR4E
	HPE 3 year Foundation Care Next business day ML310e Service	U2FR0E
	HPE 3 year Foundation Care Next business day with CDMR ML310e Service	U2FR2E
	HPE 3 year Foundation Care Next business day with DMR ML310e Service	U2FR1E
	Installation Services	
	NOTE: Reduce the time required to get your system up and running and help minimize disruptions to your business.	
	HPE Installation ML310e/ML110 Service	U6G21E
	HPE Installation and Startup ML310e Service	U6G23E
	NOTE: For more information, customer/resellers can contact: http://www.hp.com/services/carepack	

Memory

NOTE: Memory configurations listed do not apply to "Factory Integrated Models".

HPE SmartMemory

New HPE SmartMemory now provides additional protection for your servers. With Hewlett Packard Enterprise Authentication it can verify that you have true Hewlett Packard Enterprise Qualified Memory in your HPE ProLiant Gen8 server. With HPE SmartMemory your new HPE ProLiant server can take advantage of additional Gen8 enhancements in performance, durability and future manageability support through HPE Active Health System

DDR3 memory population guidelines

For detailed memory configuration rules and guidelines, please use the Online DDR3 Memory Configuration Tool:
http://www.hp.com/go/ddr3memory-configurator

General Guidelines:

- The HPE ProLiant ML310e Gen8 v2 Server has four memory slots
- There are two channels per server with two DIMM slots per channel
- Memory channel 1 consists of the two (2) DIMMs that are closest to the processor
- Memory channel 2 consists of the two (2) DIMMs that are furthest from the processor
- Different types of processors have different types of memory support.
- Support for single/dual-rank 1333/1600 MT/s ECC UDIMM (unbuffered DIMMS)
- The server supports up to 32 GB (4 x 8-GB) for Unbuffered DIMMs
- No support for LRDIMMs; RDIMMs; Non-ECC UDIMMs
- Do not install DIMMs if the processor is not installed
- Populate DIMMs from heaviest load (double-rank) to lightest load (single-rank)
- Non-ECC DIMMs are not supported
- Always use Hewlett Packard Enterprise qualified DIMMs

ML310e Gen8 v2 Supported Memory Bandwidth and Capacity

DIMM Type	**Unbuffered with ECC DIMMs (UDIMMs)**								
DIMM Rank	**Single Rank (1R)**				**Dual Rank (2R)**				
DIMM Capacity	2GB	2GB	2GB	4GB	4GB	4GB	8GB	8GB	8GB
DIMM Native Speed (MT/s)	1333	1600	1600	1333	1600	1600	1333	1600	1600
Voltage	LV	Std	LV	LV	Std	LV	LV	Std	LV
SLOTS THAT CAN BE POPULATED									
4 slot servers	4	4	4	4	4	4	4	4	4
MAXIMUM CAPACITY (GB)*									
	8	8	8	16	16	16	32	32	32
POPULATED DIMM SPEED (MT/s)									
1 DIMM Per Channel	1333	1600	1600	1333	1600	1600	1333	1600	1600
2 DIMM Per Channel	1333**	1600	1600	1333**	1600	1600	1333**	1600	1600

NOTE: Memory speed is a function of the processor QPI bus speed. To realize the performance memory capabilities listed above HPE SmartMemory is required.

*** Maximum capacity will vary based on individual server platform qualification schedule**

**** For HPE SmartMemory, UDIMM is supported at 2DPC@1333 at 1.35V. Third party memory may only support up to 2DPC@1066 at 1.5V.**

Memory

Memory		Slot			
		DIMM1C	**DIMM2A**	**DIMM3D**	**DIMM4B**
Standard (Performance Model)	**8 GB**	Empty	8 GB	Empty	Empty
Maximum	**32 GB**	8 GB	8 GB	8 GB	8 GB

Memory Speed by Processor Model	
Processor Models	Supported Memory Speeds
E3-1220v3, E3-1230v3, E3-1240v4, E3-1270v3	1600/1333

NOTE: Capacity references are rounded to the common Gigabyte values.

- **2GB = 2048MB**
- **4GB = 4096MB**
- **8GB = 8192MB**

DDR3 memory options part number decoder

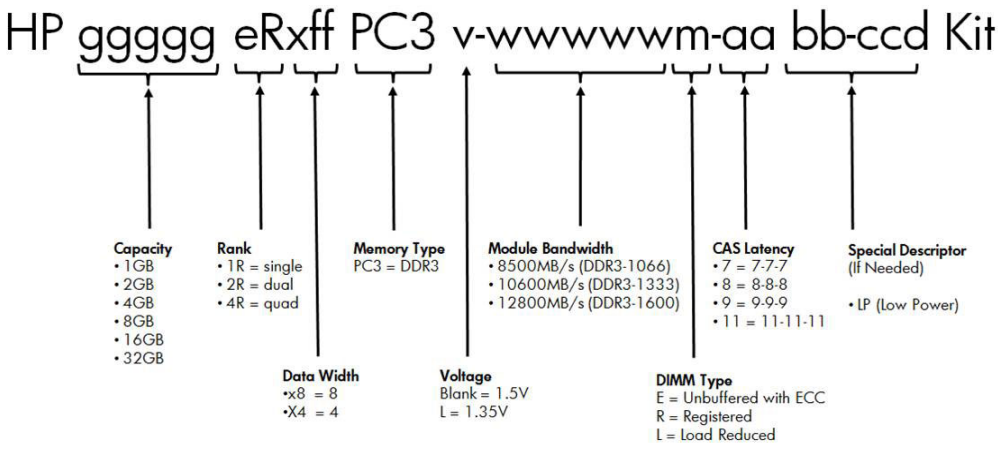

Following are memory options available from Hewlett Packard Enterprise:

HPE Memory	**Unbuffered with ECC DIMMs (UDIMMs)**	
	HPE 2GB(1x2GB) Single Rank x8 PC3-12800E (DDR3-1600) Unbuffered CAS-11 Memory Kit	669320-B21
	HP 2GB (1x2GB) Single Rank x8 PC3L-10600(DDR3-1333) Unbuffered CAS-9 LP Memory	647905-B21
	HP 2GB (1x2GB) Single Rank x8 PC3L-12800E (DDR3-1600) Unbuffered CAS-11 Low Voltage Memory Kit	713975-B21
	HPE 4GB (1x4GB) Dual Rank x8 PC3-12800E (DDR3-1600) Unbuffered CAS-11 Memory Kit	669322-B21
	HP 4GB (1x4GB) Dual Rank x8 PC3L-10600(DDR3-1333) Unbuffered CAS-9 LP Memory Kit	647907-B21

Memory

HP 4GB (1x4GB) Dual Rank x8 PC3L-12800E (DDR3-1600) Unbuffered CAS-11 Low Voltage Memory Kit	713977-B21
HPE 8GB (1x8GB) Dual Rank x8 PC3- 12800E (DDR3-1600) Unbuffered CAS-11 Memory Kit	669324-B21
HP 8GB (1x8GB) Dual Rank x8 PC3L-10600(DDR3-1333) Unbuffered CAS-9 LP Memory Kit	647909-B21
HP 8GB (1x8GB) Dual Rank x8 PC3L-12800E (DDR3-1600) Unbuffered CAS-11 Low Voltage Memory Kit	713979-B21
HPE 4GB (1x4GB) Single Rank x4 PC3-12800E (DDR3-1600) Unbuffered CAS-11 Memory Kit	820077-B21

NOTE: All DDR3 memory option kits consist of one DIMM per kit. For detailed memory configuration rules and guidelines, please use the Online DDR3 Memory Configuration Tool: http://www.hp.com/go/ddr3memory-configurator.

Storage

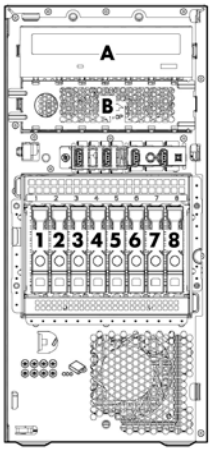

1 - 8	8 x 2.5" (SFF) SAS/SATA hard drive bays
A	Removable Optical Drive
B	Removable Optical Drive

NOTE: Once Redundant Power Supply is installed, Bay A will be the only media bay available for use.

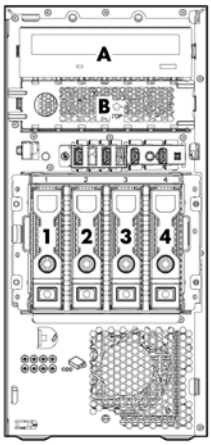

1 - 4	4 x 3.5" (LFF) SAS/SATA hard drive bays
A	Removable Optical Drive
B	Removable Optical Drive

NOTE: Once Redundant Power Supply is installed, Bay A will be the only media bay available for use.

Technical Specifications

System Unit	**Tower Dimensions** (H x W x D) (with feet/bezel)	14.5.x 6.89 x 18.71 in (36.82 x17.5 x 47.52 cm)	
	Tower Weight (approximate)	Maximum (all hard drives, power supplies, and processors installed)	41.8 lb (18.96 kg)
		Minimum (one hard drive, power supply, and processor installed)	25.29 lb (11.47 kg)
	Input Requirements (per power supply)	Rated Line Voltage	100 to 240 VAC
		Rated Input Current	6 Amps
		Rated Input Frequency	47 to 63 Hz
		Rated Input Power	440W at 100 V AC input 440W at 200V AC input
	BTU Rating	Maximum	460W - 1773 BTU / hr (at 120 VAC), 1715 (at 240 VAC)
	Power Supply Output (per power supply)	Rated Steady-State Power	350 W (at 100 VAC), 350 W (at 200 VAC)
		Maximum Peak Power	350 W (at 100 VAC), 350 W (at 200 VAC)
	System Inlet Temperature	Operating	10° to 35°C (50° to 95°F) at sea level with an altitude derating of 1.0°C per every 304.8 m (1.8°F per every 1000 ft) above sea level to a maximum of 3048 m (10,000 ft), no direct sustained sunlight. Maximum rate of change is 10°C/hr (18°F/hr). The upper limit may be limited by the type and number of options installed. System performance may be reduced if operating with a fan fault or above 30°C (86°F).
		Non-operating	-30° to 60°C (-22° to 140°F). Maximum rate of change is 20°C/hr (36°F/hr).
	Relative Humidity (non-condensing)	Operating	10 to 90% relative humidity (Rh), 28°C (82.4°F) maximum wet bulb temperature, non-condensing.
		Non-operating	5 to 95% relative humidity (Rh), 38.7°C (101.7°F) maximum wet bulb temperature, non-condensing.
	Altitude	Operating	3048 m (10,000 ft). This value may be limited by the type and number of options installed. Maximum allowable altitude change rate is 457 m/min (1500 ft/min).
		Non-operating	9144 m (30,000 ft). Maximum allowable altitude change rate is 457 m/min (1500 ft/min).
	Acoustic Noise	Listed are the declared A-Weighted sound power levels (LWAd) and declared average bystander position A-Weighted sound pressure levels (LpAm) when the product is operating in a 23°C ambient environment. Noise emissions were measured in accordance with ISO 7779 (ECMA 74)	

Technical Specifications

		and declared in accordance with ISO 9296 (ECMA 109). Idle **L** WAd 4.0 B **L** pAm 26dB-A Operating **L** WAd 4.0 B **L** pAm 26dB-A **NOTE: The Listed sound levels apply to standard shipping configurations. Additional options may result in increased sound levels.**
	Emissions Classification (EMC)	**FCC Rating** Class B **Normative Standards** CISPR 22; EN55022; EN55024; FCC CFR 47, Pt 15; ICES-003; CNS13438; GB9254; K22;K24; EN 61000-3-2; EN 61000-3-3; EN 60950-1; IEC 60950-1 **NOTE: Product conformance to cited product specifications is based on sample (type) testing, evaluation, or assessment. This product or family of products is eligible to bear the appropriate compliance logos and statements.**
HPE Dynamic Smart Array B120i Controller	**Dimensions**	Embedded
	Disk Drive and Enclosure Interface - Transfer rate	Up to 6Gb/s SATA (Serial ATA)
	Connectors	6 internal SATA connectors
	Server Interface	x4 PCIe 2.0
	SATA Speed	6Gb/s SATA links
	Cache Memory	Zero Memory RAID has no cache memory
	Logical Drives Supported	Up to 8 logical volumes (6 physical drives)
	Host Memory Addressing	64-bit, supporting greater than 4GB server memory space
	Hot Plug Support	Yes
	RAID Support	RAID 0 (Striping), RAID 1 (Mirroring) RAID 1+0 (Striping & Mirroring)
HPE Ethernet 1Gb 2-port 332i Adapter	**Network Interface**	10Base-T/100Base-TX/1000Base-TX
	Compatibility	IEEE 802.3 10Base-T IEEE 802.3ab 1000Base-T IEEE 802.3u 100Base-TX Energy Efficient Ethernet (EEE) compliant with IEEE Std 802.3az (default is disabled)
	Data Transfer Method	PCI-e, two lanes (x2)
	Controller	BCM5720
	Network Transfer Rate	10Base-T (Half-Duplex) 10 Mb/s per port, 20 Mb/s Combined 10Base-T (Full-Duplex) 20 Mb/s per port, 40 Mb/s Combined

Technical Specifications

		100Base-TX (Half-Duplex)	100 Mb/s per port, 200 Mb/s Combined
		100Base-TX (Full-Duplex)	200 Mb/s per port, 400 Mb/s Combined
		1000Base-TX (Half-Duplex)	1000Mb/s per port, 2000 Mb/s Combined
		1000 Base-TX (Full-Duplex)	2000Mb/s per port, 4000 Mb/s Combined
	Connector	RJ-45	
	Cable Support	10Base-T	Categories 3, 4 or 5 UTP; up to 328 ft (100 m)
		10/100/1000Base-TX	Category 5 or better; up to 328 ft (100 m)
Environment-friendly Products and Approach	**End-of-life Management and Recycling**	Hewlett Packard Enterprise offers end-of-life HPE product return, trade-in, and recycling programs in many geographic areas. For trade-in information, please go to: **http://www.hp.com/go/green**. To recycle your product, please go to: **http://www.hp.com/go/green** or contact your nearest Hewlett Packard Enterprise sales office. Products returned to Hewlett Packard Enterprise will be recycled, recovered or disposed of in a responsible manner. The EU WEEE directive (2002/95/EC) requires manufacturers to provide treatment information for each product type for use by treatment facilities. This information (product disassembly instructions) is posted on the Hewlett Packard Enterprise web site at: **http://www.hp.com/go/green**. These instructions may be used by recyclers and other WEEE treatment facilities as well as Hewlett Packard Enterprise OEM customers who integrate and re-sell Hewlett Packard Enterprise equipment.	

Summary of Changes

Date	Version History	Action	Description of Change
23-Oct-2017	From Version 28 to 29	Changed	Care Pack naming and Service and Support- Parts and Materials updated.
16-Feb-2016	From Version 27 to 28	Added	New Hard Drives offering was added to HPE Hard Drives section. High Performance Clusters section was added to the QuickSpecs.
		Changed	Additional Options section was revised.
		Removed	Obsolete models were removed from the Pre-configured Models section. Obsolete SKUs were removed from the QuickSpecs.
17-Dec-2015	From Version 26 to 27	Added	Smart Buy models were added to the NA version.
01-Dec-2015	From Version 25 to 26	Added	New Hard Drives offering was added to HPE Hard Drives section.
		Removed	Obsolete SKUs were removed from the QuickSpecs.
17-Aug-2015	From Version 24 to 25	Added	New option was added to HPE Memory.
		Changed	New Solid State Drives offering was added to HPE Hard Drives section.
01-Jun-2015	From Version 23 to 24	Added	New Hard Drives were added to Core Options.
		Removed	Pre-configured Models section was revised.
		Changed	Obsolete SKUs were removed from Core Options, and Additional Options.
30-Mar-2015	From Version 22 to 23	Added	New Hard Drives were added to Core Options.
		Removed	Obsolete SKUs removed from HPE Processors.
09-Feb-2015	From Version 21 to 22	Added	New Hard Drives, DirectFlow UPS, Rack and Tower G4 Models, LCD8500 1U Rackmount Models and Options were added to the Additional Options section.
		Changed	HPE Uninterruptible Power Systems and HPE Rack Options in Additional Options section were revised.
09-Feb-2015	From Version 20 to 21	Changed	Versioning matching with Product Bulletin
01-Dec-2014	From Version 19 to 20	Added	HPE 1.6TB 6G SATA Value Endurance SFF 2.5-in SC Enterprise Value 3yr Wty Solid State Drive and HPE 1.6TB 6G SATA Value Endurance LFF 3.5-in SC Converter Enterprise Value 3yr Wty Solid State Drive were added to HPE Hard Drives.
		Removed	Removed two Proactive Care Services (U6F65E and U6F66E), Foundation Care services and Proactive Care Personalized Support Option from HPE Pointnext operational services.
01-Nov-2014	From Version 18 to 19	Changed	Service and Support section was revised.
29-Sep-2014	From Version 17 to 18	Added	New Solid State Drives were added. HPE Managed Power Distribution Units (maPDU) was added to Additional Options.
		Changed	Service and Support section was revised. HPE Hard Drives was revised in Core Options section.
09-Sep-2014	From Version 16 to 17	Added	6G SATA Hot Plug SFF VE (2.5-inch) SC EB SSD and 6G SATA Hot Plug SFF VE (2.5-inch) SC EV SSD hard drives were added to Core Options section.
18-Aug-2014	From Version 15 to 16	Added	New Hard Drives were added. HPE Remote mPDUs half height version were added.
		Changed	Core Options and Additional Options sections were revised.
10-Jun-2014	From Version 14 to 15	Added	Entry, Base and Performance processors were added to Standard Features.

Summary of Changes

			Entry and Performance Pre-configured models were added. Entry and Performance processors were added.
		Changed	Memory, Basic and Remote Power Distribution Units were revised.
18-Apr-2014	From Version 13 to 14	Changed	Memory, HPE Insight Software, Basic and Remote Monitoring Power Distribution Units, and HPE Pointnext operational services were revised.
31-Mar-2014	From Version 12 to 13	Changed	12G SAS High Endurance Hot Plug SFF Enterprise Performance Solid State Drives and 12G SAS Mainstream Endurance Hot Plug SFF Enterprise Mainstream Solid State Drives were added to Hard Drives HPE Computation and Graphics Accelerators was added to Core Options HPE Insight Software, Storage Controllers and HPE USB and SD Options were revised in Additional Options
31-Jan-2014	From Version 11 to 12	Changed	Model descriptions, Tape Backup, and HPE USB and SD Options were revised.
13-Dec-2013	From Version 10 to 11	Changed	HPE Insight Control including 1yr 24x7 Support ProLiant Ml/DL/BL-bundle FIO Electronic License was added to Step 3 in Configuration Information HPE SmartCache and HPE H221 PCIe 3.0 SAS Host Bus Adapter were added to Storage Controllers HPE Tape and Disk Storage Systems were added to Additional Options HPE 8GB USB EM Flash Media Kit was added to HPE USB and SD Options HPE 1.2TB 6G SAS 10k rpm SFF SC Dual Port Enterprise 3yr Warranty Hard Drive was added and 3G SATA MLC Hot Plug SFF and LFF Enterprise Mainstream Solid State Drives were removed from Hard Drives HPE Basic Power Distribution Units and HPE Remote Monitoring Power Distribution Unites were revised in in Additional Options HPE Power Distribution Units were removed from Additional Options
15-Nov-2013	From Version 9 to 10	Changed	Minor change made to the Core Options/ Hard Drives Section.
30-Sep-2013	From Version 8 to 9	Added	Entry and Base Processors were added HPE Insight Software was added to Step 3 in Configuration Information - Factory Integrated Models 3G SATA MLC Hot Plug SFF and LFF Enterprise Mainstream Solid State Drives were added to Hard Drives Modular PDUs 1U/0U were added to HPE Power Distribution Units HPE Remote Monitoring Power Distribution Units was added to Additional Options HPE Enterprise Mainstream Flash Media Kits for Memory Cards were added to HPE USB and SD Drives
20-Sep-2013	From Version 7 to 8	Changed	HPE Dynamic Smart Array B120i Controller in Technical Specifications was revised.
10-Sep-2013	From Version 6 to 7	Changed	Changes made throughout all Memory sections.
22-Aug-2013	From Version 5 to 6	Added	Added the Security section to Additional Options
19-Aug-2013	From Version 4 to 5	Changed / Added	Added the What's New section Changes made in the Standard Features section Changes made throughout all Memory sections The Service and Support section was completely revised. Changes made throughout the Configuration Information

Summary of Changes

			section. Added the HPE Tape Backup section
15-Jul-2013	From Version 3 to 4	Added	HPE Disk Backup was added to Additional Options.
14-Jun-2013	From Version 2 to 3	Changed	Changes made to the Models section only.
12-Jun-2013	From Version 1 to 2	Changed	Changes made to the North America and Canada versions only.

Sign up for updates

★ Rate this document

© Copyright 2017 Hewlett Packard Enterprise Development LP. The information contained herein is subject to change without notice. The only warranties for Hewlett Packard Enterprise products and services are set forth in the express warranty statements accompanying such products and services. Nothing herein should be construed as constituting an additional warranty. Hewlett Packard Enterprise shall not be liable for technical or editorial errors or omissions contained herein.

Microsoft and Windows NT are US registered trademarks of Microsoft Corporation.
Intel is a US registered trademark of Intel Corporation.

Hewlett Packard Enterprise

For hard drives, 1GB = 1 billion bytes. Actual formatted capacity is less.

c04128133 - 14564 - North America - V29 - 23-October-2017