Hewlett Packard Enterprise

HPE ProLiant ML310e Gen8 v2 Server
User Guide

Abstract

This document is for the person who installs, administers, and troubleshoots servers and storage systems. Hewlett Packard Enterprise assumes you are qualified in the servicing of computer equipment and trained in recognizing hazards in products with hazardous energy levels.

Part Number: 719821-001aR
January 2016
Edition: 2

© Copyright 2013, 2016 Hewlett Packard Enterprise Development LP

The information contained herein is subject to change without notice. The only warranties for Hewlett Packard Enterprise products and services are set forth in the express warranty statements accompanying such products and services. Nothing herein should be construed as constituting an additional warranty. Hewlett Packard Enterprise shall not be liable for technical or editorial errors or omissions contained herein.

Microsoft® and Windows® are either registered trademarks or trademarks of Microsoft Corporation in the United States and/or other countries.

Contents

Component identification 6
- Front panel components 6
- Front panel LEDs and buttons 7
- Rear panel components 8
- Rear panel LEDs and buttons 9
- System board components 10
  - DIMM slot locations 11
  - PCIe expansion slot definitions 11
  - System maintenance switch 11
  - NMI functionality 12
- Drive numbering 12
- Hot-plug drive LED definitions 13
- FBWC module LED definitions 14
- Fan locations 15

Operations 16
- Power up the server 16
- Power down the server 16
- Unlock the tower bezel 17
- Remove the tower bezel 17
- Install the tower bezel 17
- Remove the access panel 18
- Install the access panel 19
- Remove the air baffle 19
- Install the air baffle 20

Setup 21
- Optional installation services 21
- Rack planning resources 21
- Optimum environment 21
  - Space and airflow requirements 21
  - Temperature requirements 22
  - Power requirements 22
  - Electrical grounding requirements 22
- Server warnings and cautions 22
- Rack warnings 23
- Identifying the contents of the server shipping carton 23
- Installing hardware options 24
- Installing the server into the rack 24
- Installing the operating system 25
- Powering on and selecting boot options 25
- Register the product 26

Hardware options installation 27
- Introduction 27
- Drive options 27
  - Drive installation guidelines 27
  - Installing a non-hot-plug drive 27
  - Installing a hot-plug drive 29
- Drive cage options 30
  - Four-bay LFF hot-plug drive backplane option 30
  - Eight-bay SFF hot-plug drive cage option 33
- Controller options 35
  - Installing a storage controller 35
  - Installing the FBWC module and capacitor pack 36

Optical drive option....38
Memory options....40
HPE SmartMemory....41
DIMM identification....41
Single-rank and dual-rank DIMMs....42
Memory subsystem architecture....42
ECC memory....42
General DIMM slot population guidelines....42
Installing a DIMM....43
Expansion board options....44
HPE Trusted Platform Module option....47
Installing the Trusted Platform Module board....48
Retaining the recovery key/password....49
Enabling the Trusted Platform Module....50
RPS enablement option....50
Setting up the HPE PS1810-24G Switch (optional)....54

Cabling....58
Cabling overview....58
System fan cabling....58
Storage cabling....59
Four-bay LFF drive cabling....59
Eight-bay SFF drive cabling....61
Optical drive cabling....61
Power supply cabling....62
Integrated power supply cabling....62
Redundant power supply cabling....63
Capacitor pack cabling....63

Software and configuration utilities....65
Server mode....65
Hewlett Packard Enterprise product QuickSpecs....65
HPE iLO Management....65
HPE iLO....65
Intelligent Provisioning....67
Erase Utility....68
HPE Insight Remote Support software....68
Scripting Toolkit for Windows and Linux....69
Service Pack for ProLiant....69
HP Smart Update Manager....69
HPE ROM-Based Setup Utility....70
Using RBSU....70
Auto-configuration process....70
Boot options....71
Re-entering the server serial number and product ID....71
Utilities and features....71
Array Configuration Utility....71
Option ROM Configuration for Arrays....72
ROMPaq utility....73
Automatic Server Recovery....73
USB support....73
Redundant ROM support....74
Keeping the system current....74
Drivers....74
Software and firmware....74
Version control....75
Operating systems and virtualization software support for ProLiant servers....75
HPE Technology Service Portfolio....75
Change control and proactive notification....76

Troubleshooting....77
Troubleshooting resources....77

System battery replacement 78
Warranty and regulatory information 79
Warranty information 79
Regulatory information 79
Safety and regulatory compliance 79
Belarus Kazakhstan Russia marking 79
Turkey RoHS material content declaration 80
Ukraine RoHS material content declaration 80
Electrostatic discharge 81
Preventing electrostatic discharge 81
Grounding methods to prevent electrostatic discharge 81
Specifications 82
Environmental specifications 82
Server specifications 82
Power supply specifications 82
HPE 350 W 4U Integrated Power Supply 82
HPE 460 W CS Gold Hot-plug Power Supply 83
Hot-plug power supply calculations 83
Support and other resources 84
Accessing Hewlett Packard Enterprise Support 84
Information to collect 84
Accessing updates 84
Websites 84
Customer Self Repair 85
Remote support 92
Acronyms and abbreviations 93
Documentation feedback 97
Index 98

Component identification

Front panel components

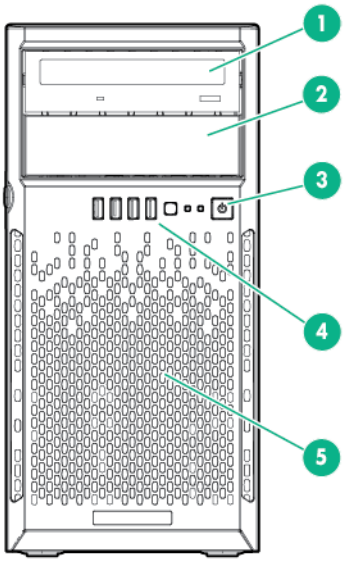

Item	Description
1	Optical drive (optional)
2	Media drive bay
3	Power On/Standby button and system power LED
4	USB connectors
5	Drive bays (inside)

Front panel LEDs and buttons

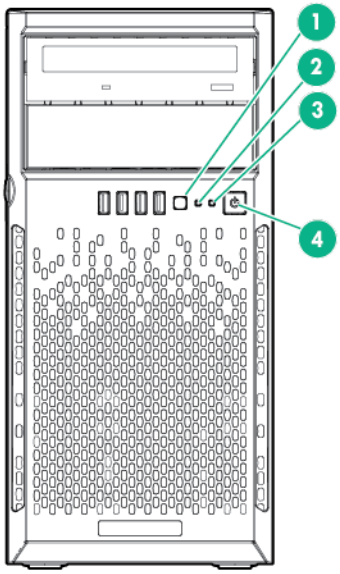

Item	Description	Status
1	UID button/LED	Solid blue = Activated Flashing blue (1 Hz/cycle per sec) = Remote management or firmware upgrade in progress Off = Deactivated
2	Health LED	Solid green = Normal Flashing amber = System degraded Flashing red (1 Hz/cycle per sec) = System critical Fast-flashing red (4 Hz/cycles per sec) = Power fault*
3	NIC status LED	Solid green = Link to network Flashing green (1 Hz/cycle per sec) = Network active Off = No network activity
4	Power On/Standby button and system power LED	Solid green = System on Flashing green (1 Hz/cycle per sec) = Performing power on sequence Solid amber = System in standby Off = No power present**

*To identify components in a degraded or critical state, see the Systems Insight Display LEDs, check iLO/BIOS logs, and reference the server troubleshooting guide.
**Facility power is not present, power cord is not attached, no power supplies are installed, power supply failure has occurred, or the power button cable is disconnected.

Rear panel components

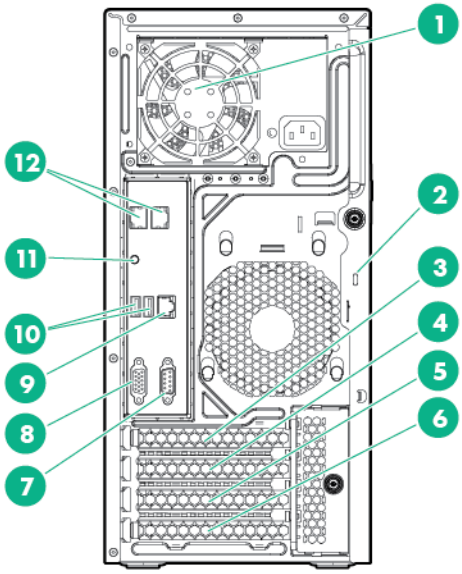

Item	Description
1	Power supply
2	Kensington security slot
3	Slot 4 PCIe x16 (8, 4, 1)*
4	Slot 3 PCIe x8 (8, 4, 1)*
5	Slot 2 PCIe x8 (1)*
6	Slot 1 PCIe x4 (1)*
7	Serial connector
8	Video connector
9	Dedicated iLO port
10	USB 3.0 connectors
11	UID LED/button
12	NIC connectors

* For more information on the expansion slot specifications, see "PCIe expansion slot definitions (on page 11)."

Rear panel LEDs and buttons

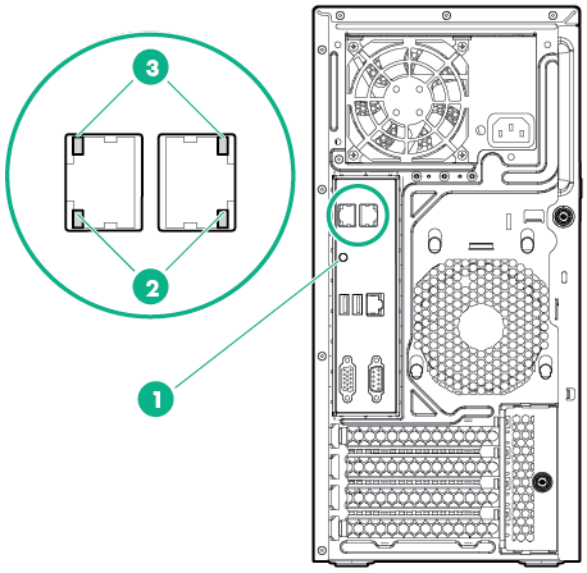

Item	Description	Status
1	UID button/LED	Solid blue = Activated Flashing blue (1 Hz/cycle per sec) = Remote management or firmware upgrade in progress Off = Deactivated
2	NIC status LED	Solid Green = Activity exists Flashing green = Activity exists Off = No activity exists
3	NIC link LED	Solid green = Link exists Off = No link exists

System board components

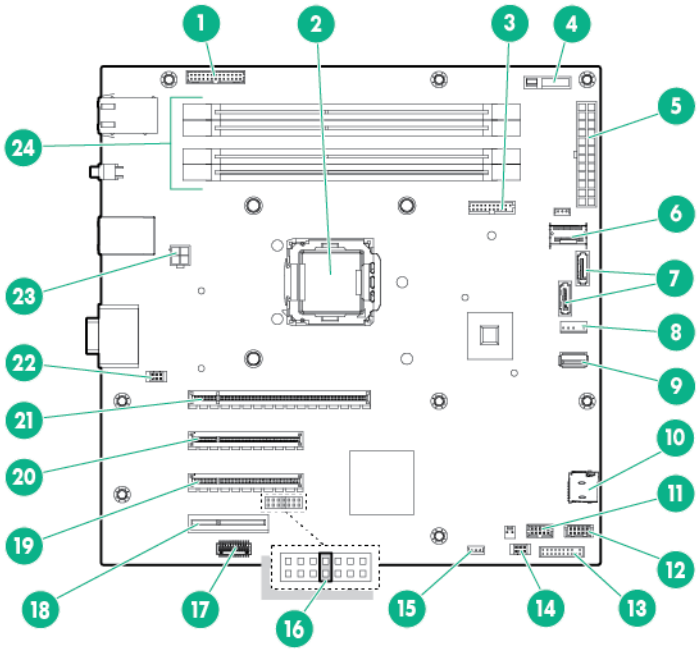

Item	Description
1	RPS connector
2	Processor socket
3	TPM connector
4	System battery
5	24-pin power supply connector
6	Mini-SAS connector
7	SATA connectors
8	Internal USB cable connector
9	Internal USB connector
10	Micro SD card slot
11	Front USB connector 2
12	Front USB connector 1
13	Front panel connector
14	Front system fan connector (fan 2)
15	Ambient thermal sensor connector
16	NMI header
17	System maintenance switch
18	Slot 1 PCIe2 x4 (1)*
19	Slot 2 PCIe2 x8 (1)*
20	Slot 3 PCIe3 x8 (8, 4, 1)*
21	Slot 4 PCIe3 x16 (8, 4, 1)*
22	Rear system fan connector (fan 1)
23	4-pin power supply connector
24	DIMM slots

* For more information on the expansion slot specifications, see "PCIe expansion slot definitions (on page 11)."

DIMM slot locations

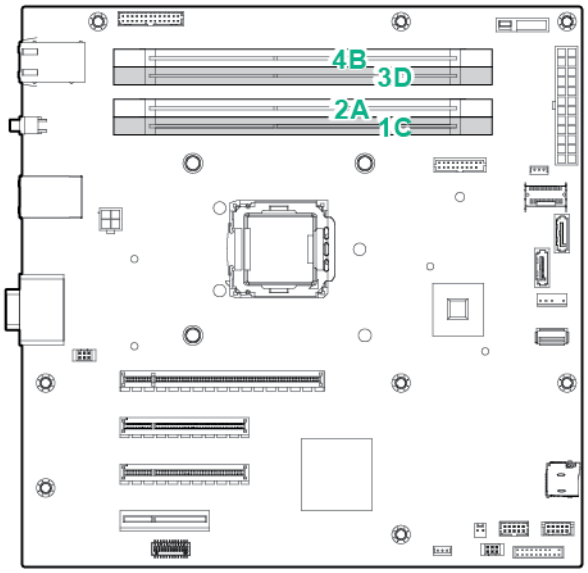

DIMM slots are numbered 1 through 4. Letters are used for AMP mode DIMM ordering.

PCIe expansion slot definitions

Slot number	Type	Length	Height	Connector link width	Negotiable link width
1	PCIe2	Half	Full	x4	x1
2	PCIe2	Full	Full	x8	x1
3	PCIe3	Full	Full	x8	x8
4	PCIe3	Full	Full	x16	x8

System maintenance switch

Switch	Default	Function
1	Off	Off = No function On = iLO security is disabled
2	Off	Off = System configuration can be changed On = System configuration is locked
5	Off	Off = Power-on password is enabled On = Power-on password is disabled
6	Off	Off = No function On = ROM reads configuration as invalid
3, 4, 7, 8, 9, 10, 11, 12	—	Reserved

When the system maintenance switch position 6 is set to the On position, the system is prepared to erase all system configuration settings from both CMOS and NVRAM.

△ **CAUTION:** Clearing CMOS and/or NVRAM deletes configuration information. Be sure to properly configure the server or data loss could occur.

NMI functionality

An NMI crash dump creates a crash dump log before resetting a system which is not responding.

Crash dump log analysis is an essential part of diagnosing reliability problems, such as failures of operating systems, device drivers, and applications. Many crashes freeze a system, and the only available action for administrators is to restart the system. Resetting the system erases any information which could support problem analysis, but the NMI feature preserves that information by performing a memory dump before a system reset.

To force the system to invoke the NMI handler and generate a crash dump log, do one of the following:

- Use the iLO Virtual NMI feature.
- Short the NMI header ("System board components" on page 10).

For more information, see the Hewlett Packard Enterprise website (http://www.hpe.com/support/NMI-CrashDump).

Drive numbering

- Four-bay LFF drive model

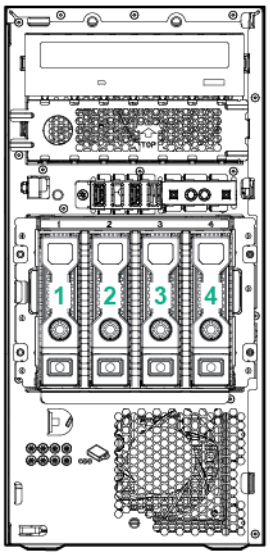

- Eight-bay SFF drive model

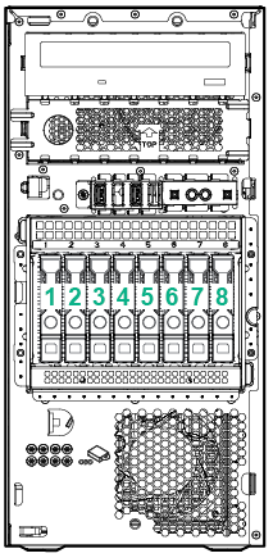

Hot-plug drive LED definitions

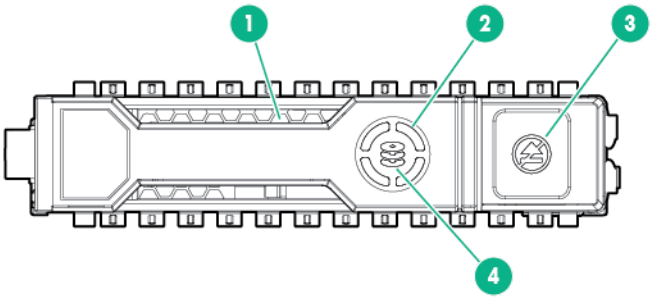

Item	LED	Status	Definition
1	Locate	Solid blue	The drive is being identified by a host application.
		Flashing blue	The drive carrier firmware is being updated or requires an update.
2	Activity ring	Rotating green	Drive activity
		Off	No drive activity
3	Do not remove	Solid white	Do not remove the drive. Removing the drive causes one or more of the logical drives to fail.
		Off	Removing the drive does not cause a logical drive to fail.
4	Drive status	Solid green	The drive is a member of one or more logical drives.
		Flashing green	The drive is rebuilding or performing a RAID migration, strip size migration, capacity expansion, or logical drive extension, or is erasing.
		Flashing amber/green	The drive is a member of one or more logical drives and predicts the drive will fail.
		Flashing amber	The drive is not configured and predicts the drive will fail.
		Solid amber	The drive has failed.

Item	LED	Status	Definition
		Off	The drive is not configured by a RAID controller.

FBWC module LED definitions

The FBWC module has three single-color LEDs (one amber and two green). The LEDs are duplicated on the reverse side of the cache module to facilitate status viewing.

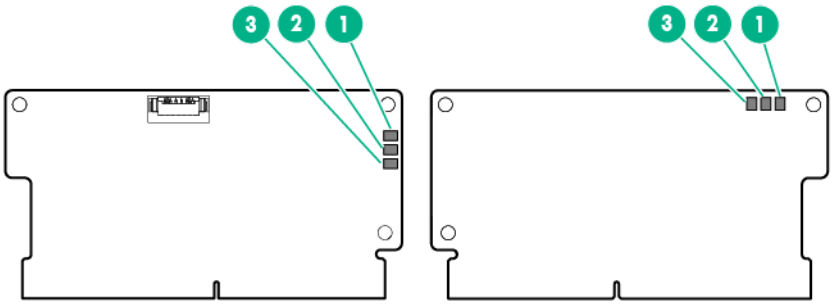

1 - Amber	2 - Green	3 - Green	Interpretation
Off	Off	Off	The cache module is not powered.
Off	Flashing 0.5 Hz	Flashing 0.5 Hz	The cache microcontroller is executing from within its boot loader and receiving new flash code from the host controller.
Off	Flashing 1 Hz	Flashing 1 Hz	The cache module is powering up, and the capacitor pack is charging.
Off	Off	Flashing 1 Hz	The cache module is idle, and the capacitor pack is charging.
Off	Off	On	The cache module is idle, and the capacitor pack is charged.
Off	On	On	The cache module is idle, the capacitor pack is charged, and the cache contains data that has not yet been written to the drives.
Off	Flashing 1 Hz	Off	A backup is in progress.
Off	On	Off	The current backup is complete with no errors.
Flashing 1 Hz	Flashing 1 Hz	Off	The current backup failed, and data has been lost.
Flashing 1 Hz	Flashing 1 Hz	On	A power error occurred during the previous or current boot. Data may be corrupt.
Flashing 1 Hz	On	Off	An overtemperature condition exists.
Flashing 2 Hz	Flashing 2 Hz	Off	The capacitor pack is not attached.
Flashing 2 Hz	Flashing 2 Hz	On	The capacitor has been charging for 10 minutes, but has not reached sufficient charge to perform a full backup.
On	On	Off	The current backup is complete, but power fluctuations occurred during the backup.
On	On	On	The cache module microcontroller has failed.

Fan locations

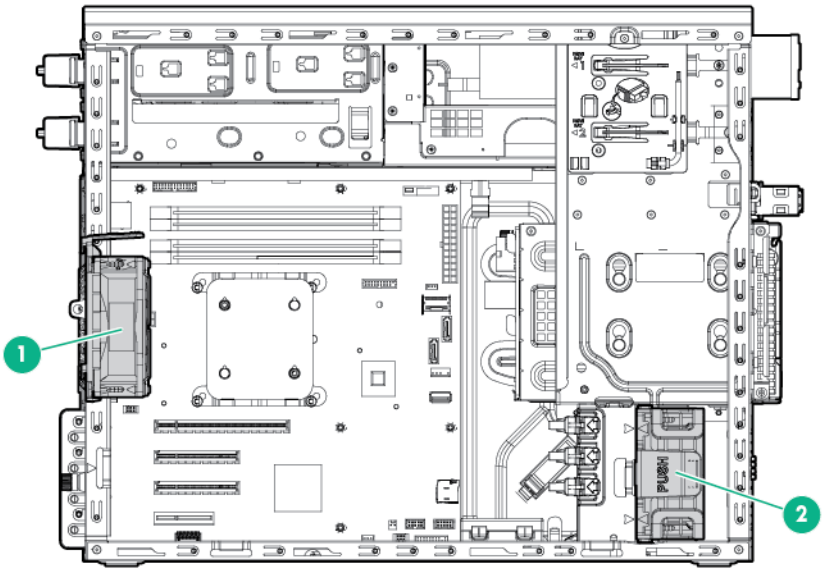

Item	Description
1	Rear system fan (fan 1, for processor cooling)
2	Front system fan (fan 2, for expansion board cooling)

Operations

Power up the server

1. Connect each power cord to the server.
2. Connect each power cord to the power source.
3. Press the Power On/Standby button.

   The server exits standby mode and applies full power to the system. The system power LED changes from amber to green.

Power down the server

Before powering down the server for any upgrade or maintenance procedures, perform a backup of critical server data and programs.

WARNING: To reduce the risk of personal injury, electric shock, or damage to the equipment, remove the power cord to remove power from the server. The front panel Power On/Standby button does not completely shut off system power. Portions of the power supply and some internal circuitry remain active until AC power is removed.

IMPORTANT: When the server is in standby mode, auxiliary power is still being provided to the system.

To power down the server, use one of the following methods:

- Press and release the Power On/Standby button.

  This method initiates a controlled shutdown of applications and the OS before the server enters standby mode.
- Press and hold the Power On/Standby button for more than 4 seconds to force the server to enter standby mode.

  This method forces the server to enter standby mode without properly exiting applications and the OS. If an application stops responding, you can use this method to force a shutdown.
- Use a virtual power button selection through iLO.

  This method initiates a controlled remote shutdown of applications and the OS before the server enters standby mode.

Before proceeding, verify the server is in standby mode by observing that the system power LED is amber.

Unlock the tower bezel

The tower bezel must be unlocked and opened to access the drive cage and media bays. It must be unlocked to remove the access panel. The bezel must remain closed during normal server operations.

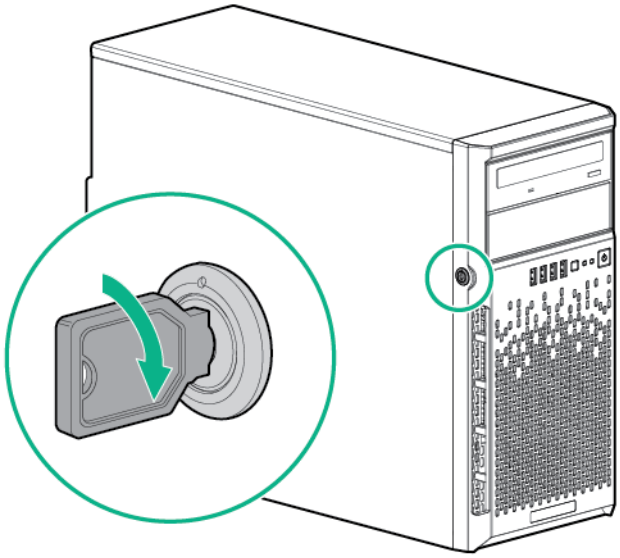

Remove the tower bezel

1. Unlock the tower bezel (on page 17).
2. Open the tower bezel.
3. Pull the bezel away from the front chassis.

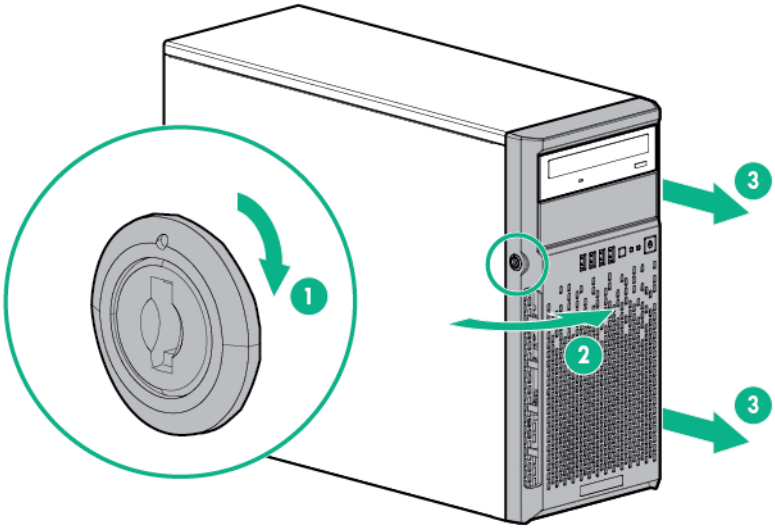

Install the tower bezel

1. Insert the tabs on the tower bezel to the slots on the front chassis.

2. Close and lock the tower bezel.

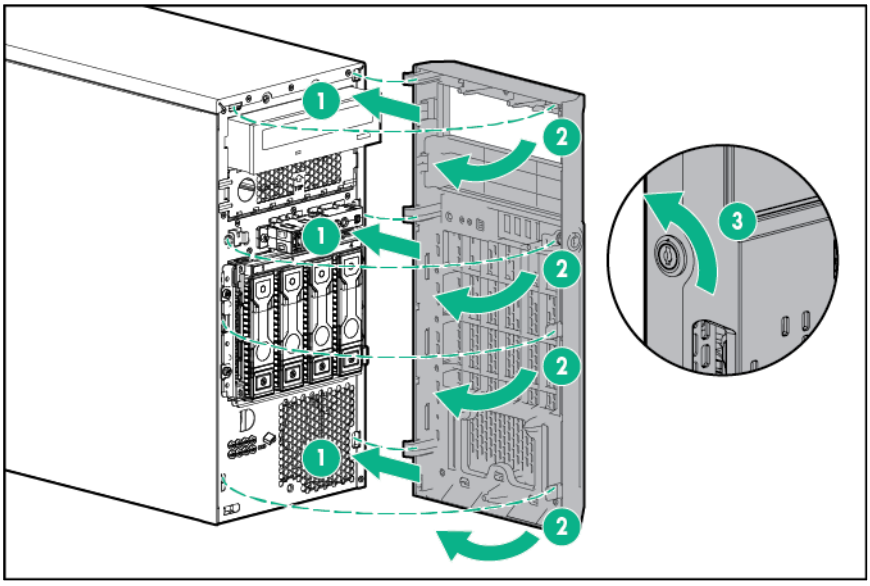

Remove the access panel

WARNING: To reduce the risk of personal injury from hot surfaces, allow the drives and the internal system components to cool before touching them.

CAUTION: For proper cooling, do not operate the server without the access panel, baffles, expansion slot covers, or blanks installed. If the server supports hot-plug components, minimize the amount of time the access panel is open.

1. Power down the server (on page 16).
2. Remove all power:
   a. Disconnect each power cord from the power source.
   b. Disconnect each power cord from the server.
3. Unlock the tower bezel (on page 17).
4. Place the server on its side.
5. Remove the access panel:
   a. Loosen the access panel thumbscrew.
   b. Slide the access panel back.

c. Lift the access panel away from the chassis.

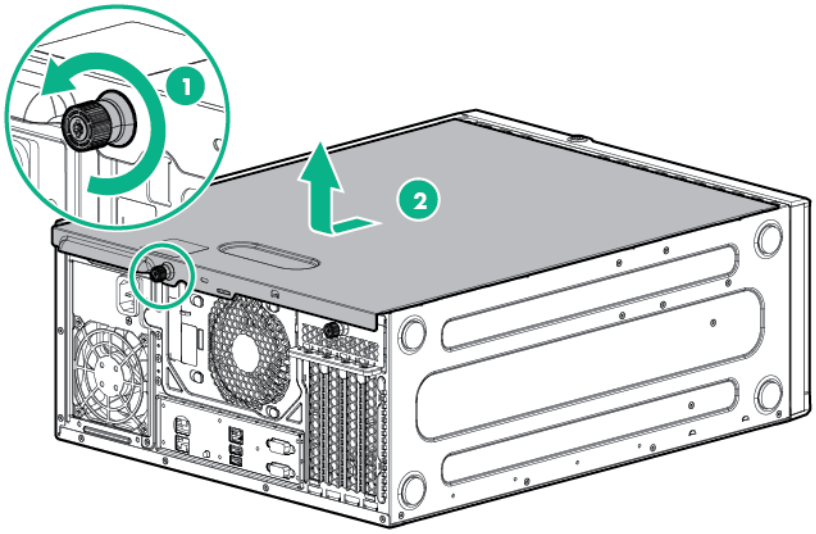

Install the access panel

1. Install the access panel:
   a. Place the access panel on the chassis, and slide it toward the front of the server.
   b. Tighten the thumbscrew.

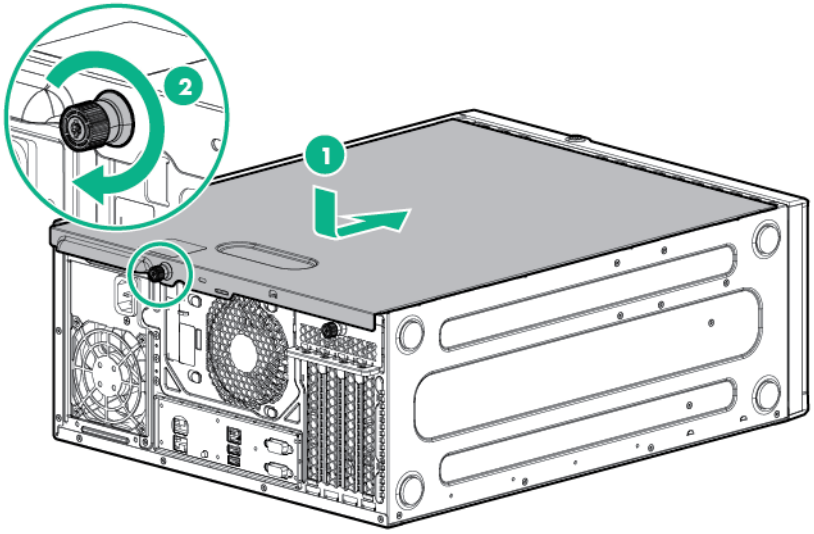

2. Close and lock the tower bezel.

Remove the air baffle

CAUTION: For proper cooling, do not operate the server without the access panel, baffles, expansion slot covers, or blanks installed. If the server supports hot-plug components, minimize the amount of time the access panel is open.

1. Power down the server (on page 16).

2. Remove all power:
   a. Disconnect each power cord from the power source.
   b. Disconnect each power cord from the server.
3. Unlock the tower bezel (on page 17).
4. Remove the access panel (on page 18).
5. Remove the air baffle.

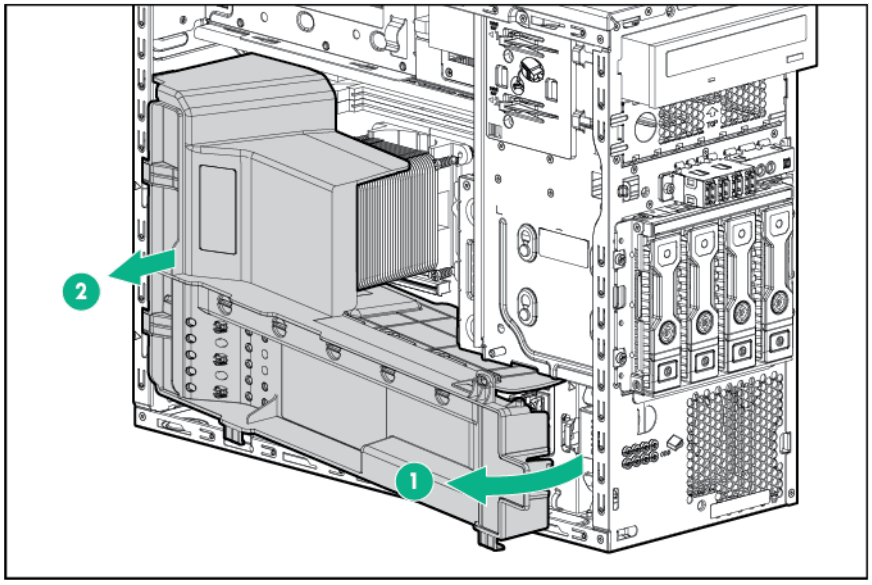

Install the air baffle

1. Insert the tabs on the baffle into the slots on the rear chassis.
2. Push the front end of the baffle inside the chassis.

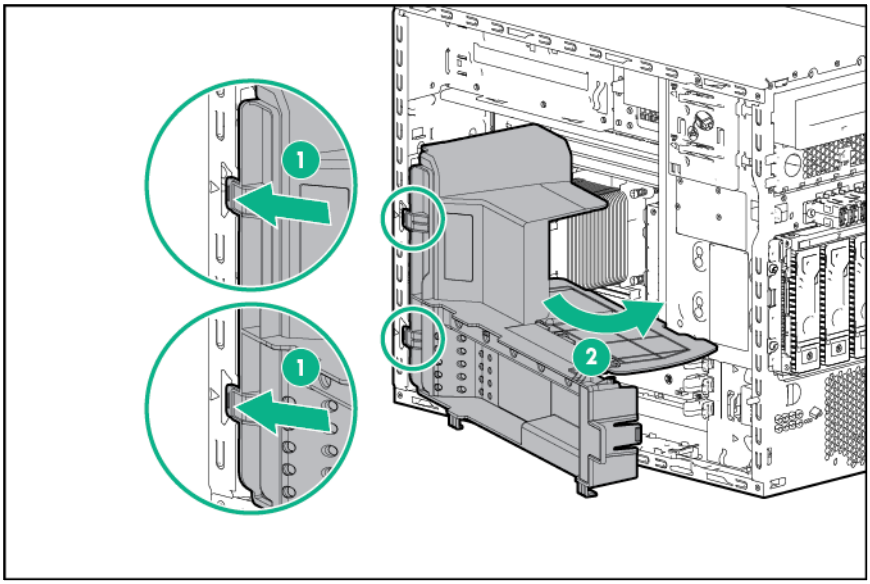

3. Install the access panel (on page 19).
4. Lock the tower bezel.
5. Power up the server (on page 16).

Setup

Optional installation services

Delivered by experienced, certified engineers, HP Care Pack services help you keep your servers up and running with support packages tailored specifically for HPE ProLiant systems. HP Care Packs let you integrate both hardware and software support into a single package. A number of service level options are available to meet your needs.

HP Care Pack Services offer upgraded service levels to expand your standard product warranty with easy-to-buy, easy-to-use support packages that help you make the most of your server investments. Some of the HP Care Pack services are:

- Hardware support
  - 6-Hour Call-to-Repair
  - 4-Hour 24x7 Same Day
  - 4-Hour Same Business Day
- Software support
  - Microsoft® operating systems
  - Linux operating systems
  - ProLiant Essentials (HPE SIM and RDP)
- Integrated hardware and software support
  - Critical Service
  - Proactive 24
  - Support Plus
  - Support Plus 24
- Startup and implementation services for both hardware and software

For more information on HP Care Pack Services, see the Hewlett Packard Enterprise website (www.hpe.com/info/carepackservices).

Rack planning resources

The rack resource kit ships with all Hewlett Packard Enterprise branded or Compaq branded 9000, 10000, and H9 series racks. For more information on the content of each resource, see the rack resource kit documentation.

Optimum environment

When installing the server, select a location that meets the environmental standards described in this section.

Space and airflow requirements

Leave at least a 7.6-cm (3-inch) clearance space at the front and back of the server for proper ventilation.

Temperature requirements

To ensure continued, safe, and reliable equipment operation, install or position the system in a well-ventilated, climate-controlled environment.

The maximum recommended TMRA for most server products is 35°C (95°F). The temperature in the room where the server is located must not exceed 35°C (95°F).

△ **CAUTION:** To reduce the risk of damage to the equipment when installing third-party options:

- Do not permit optional equipment to impede airflow around the server beyond the maximum allowable limits.
- Do not exceed the manufacturer's TMRA.

Power requirements

Installation of this equipment must comply with local and regional electrical regulations governing the installation of information technology equipment by licensed electricians. This equipment is designed to operate in installations covered by NFPA 70, 1999 Edition (National Electric Code) and NFPA-75, 1992 (code for Protection of Electronic Computer/Data Processing Equipment). For electrical power ratings on options, see the product rating label or the user documentation supplied with that option.

△ **CAUTION:** Protect the server from power fluctuations and temporary interruptions with a regulating uninterruptible power supply. This device protects the hardware from damage caused by power surges and voltage spikes and keeps the system in operation during a power failure.

When installing more than one server, you might have to use additional power distribution devices to safely provide power to all devices. Observe the following guidelines:

- Balance the server power load between available AC supply branch circuits.
- Do not allow the overall system AC current load to exceed 80% of the branch circuit AC current rating.
- Do not use common power outlet strips for this equipment.
- Provide a separate electrical circuit for the server.

Electrical grounding requirements

The server must be grounded properly for proper operation and safety. In the United States, you must install the equipment in accordance with NFPA 70, 1999 Edition (National Electric Code), Article 250, as well as any local and regional building codes. In Canada, you must install the equipment in accordance with Canadian Standards Association, CSA C22.1, Canadian Electrical Code. In all other countries, you must install the equipment in accordance with any regional or national electrical wiring codes, such as the International Electrotechnical Commission (IEC) Code 364, parts 1 through 7. Furthermore, you must be sure that all power distribution devices used in the installation, such as branch wiring and receptacles, are listed or certified grounding-type devices.

Because of the high ground-leakage currents associated with multiple servers connected to the same power source, Hewlett Packard Enterprise recommends the use of a PDU that is either permanently wired to the building's branch circuit or includes a nondetachable cord that is wired to an industrial-style plug. NEMA locking-style plugs or those complying with IEC 60309 are considered suitable for this purpose. Using common power outlet strips for the server is not recommended.

Server warnings and cautions

⚠ **WARNING:** To reduce the risk of personal injury from hot surfaces, allow the drives and the internal system components to cool before touching them.

⚠ **WARNING:** To reduce the risk of personal injury, electric shock, or damage to the equipment, remove the power cord to remove power from the server. The front panel Power On/Standby button does not completely shut off system power. Portions of the power supply and some internal circuitry remain active until AC power is removed.

⚠ **CAUTION:** Protect the server from power fluctuations and temporary interruptions with a regulating uninterruptible power supply. This device protects the hardware from damage caused by power surges and voltage spikes and keeps the system in operation during a power failure.

⚠ **CAUTION:** Do not operate the server for long periods with the access panel open or removed. Operating the server in this manner results in improper airflow and improper cooling that can lead to thermal damage.

Rack warnings

⚠ **WARNING:** To reduce the risk of personal injury or damage to the equipment, be sure that:

- The leveling jacks are extended to the floor.
- The full weight of the rack rests on the leveling jacks.
- The stabilizing feet are attached to the rack if it is a single-rack installation.
- The racks are coupled together in multiple-rack installations.
- Only one component is extended at a time. A rack may become unstable if more than one component is extended for any reason.

⚠ **WARNING:** To reduce the risk of personal injury or equipment damage when unloading a rack:

- At least two people are needed to safely unload the rack from the pallet. An empty 42U rack can weigh as much as 115 kg (253 lb), can stand more than 2.1 m (7 ft) tall, and might become unstable when being moved on its casters.
- Never stand in front of the rack when it is rolling down the ramp from the pallet. Always handle the rack from both sides.

⚠ **WARNING:** To reduce the risk of personal injury or damage to the equipment, adequately stabilize the rack before extending a component outside the rack. Extend only one component at a time. A rack may become unstable if more than one component is extended.

⚠ **WARNING:** When installing a server in a telco rack, be sure that the rack frame is adequately secured at the top and bottom to the building structure.

Identifying the contents of the server shipping carton

Unpack the server shipping carton and locate the materials and documentation necessary for installing the server.

The contents of the server shipping carton include:

- Server
- Power cord
- Printed setup documentation, Documentation CD, and software products

You need the following items for some procedures:

- T-10/T-15 Torx screwdriver
- Hardware options
- Operating system or application software

Installing hardware options

Install any hardware options before initializing the server. For options installation information, see the option documentation. For server-specific information, see "Hardware options installation (on page 27)."

Installing the server into the rack

To install the server into a rack with square, round, or threaded holes, refer to the instructions that ship with the rack hardware kit.

If you are installing the server into a telco rack, order the appropriate option kit at the RackSolutions website (http://www.racksolutions.com/hp). Follow the server-specific instructions on the website to install the rack brackets.

Use the following information when connecting peripheral cables and power cords to the server.

WARNING: This server is very heavy. To reduce the risk of personal injury or damage to the equipment:

- Observe local occupational health and safety requirements and guidelines for manual material handling.
- Get help to lift and stabilize the product during installation or removal, especially when the product is not fastened to the rails. Hewlett Packard Enterprise recommends that a minimum of two people are required for all rack server installations. A third person may be required to help align the server if the server is installed higher than chest level.
- Use caution when installing the server in or removing the server from the rack; it is unstable when not fastened to the rails.

CAUTION: Always plan the rack installation so that the heaviest item is on the bottom of the rack. Install the heaviest item first, and continue to populate the rack from the bottom to the top.

To install the server in a Hewlett Packard Enterprise, Compaq-branded, Telco, or a third-party rack:

1. Prepare the server for rack installation by installing the tower-to-rack conversion option kit (PN 418108-B21). For instructions, see the option kit documentation.
2. Connect peripheral devices to the server. For information on identifying connectors, see "Rear panel components."

   WARNING: To reduce the risk of electric shock, fire, or damage to the equipment, do not plug telephone or telecommunications connectors into RJ-45 connectors.

3. Connect each power cord to the server.
4. Connect each power cord to the power source.

⚠ **WARNING:** To reduce the risk of electric shock or damage to the equipment:

- Do not disable the power cord grounding plug. The grounding plug is an important safety feature.
- Plug the power cord into a grounded (earthed) electrical outlet that is easily accessible at all times.
- Unplug the power cord from the power supply to disconnect power to the equipment.
- Do not route the power cord where it can be walked on or pinched by items placed against it. Pay particular attention to the plug, electrical outlet, and the point where the cord extends from the server.

Installing the operating system

This ProLiant server does not ship with provisioning media. Everything needed to manage and install the system software and firmware is preloaded on the server.

To operate properly, the server must have a supported operating system. For the latest information on operating system support, see the Hewlett Packard Enterprise website (http://www.hpe.com/info/supportos).

To install an operating system on the server, use one of the following methods:

- Intelligent Provisioning—The iLO Management Engine is a new feature on ProLiant servers that contains Intelligent Provisioning for embedded deployment, updating, and provisioning capabilities. Intelligent Provisioning can configure the server and install an operating system, eliminating the need for SmartStart CDs and Smart Update Firmware DVDs.

  To install an operating system on the server with Intelligent Provisioning (local or remote):

  a. Connect the Ethernet cable between the network connector on the server and a network jack.
  b. Press the Power On/Standby button.
  c. During server POST, press the **F10** key.
  d. Complete the initial Preferences and Registration portion of Intelligent Provisioning (on page 67).
  e. At the 1 Start screen, click the **Configure and Install** button.
  f. To finish the installation, follow the onscreen prompts. An Internet connection is required to update the firmware and systems software.

- Remote deployment installation—To deploy an operating system remotely, use Insight Control server deployment for an automated solution.

For additional system software and firmware updates, download the Service Pack for ProLiant from the Hewlett Packard Enterprise website (http://www.hpe.com/servers/spp/download). Software and firmware must be updated before using the server for the first time, unless any installed software or components require an older version. For more information, see "Keeping the system current (on page 74)."

For more information on using these installation methods, see the Hewlett Packard Enterprise website (http://www.hpe.com/info/ilo).

Powering on and selecting boot options

1. Connect the Ethernet cable.
2. Press the Power On/Standby button.
3. During the initial boot:
   - To modify the server configuration ROM default settings, press **F9** when prompted from the start up sequence to enter the RBSU. By default, RBSU runs in the English language.
   - If you do not need to modify the server configuration and are ready to install the system software, press **F10** to access Intelligent Provisioning.

NOTE: If an HPE Smart Array controller has been added or is embedded in the system, the controller defaults to a RAID configuration based on the size and number of drives installed. For more information on modifying the controller default settings, see the documentation on the Documentation CD.

For more information on automatic configuration, see the HPE ROM-Based Setup Utility user guide on the Documentation CD or the iLO Management Engine Information Library (http://www.hpe.com/support/rbsu).

Register the product

To experience quicker service and more efficient support, register the product at the Hewlett Packard Enterprise Product Registration website (http://www.hpe.com/info/register).

Hardware options installation

Introduction

If more than one option is being installed, read the installation instructions for all the hardware options and identify similar steps to streamline the installation process.

⚠ **WARNING:** To reduce the risk of personal injury from hot surfaces, allow the drives and the internal system components to cool before touching them.

△ **CAUTION:** To prevent damage to electrical components, properly ground the server before beginning any installation procedure. Improper grounding can cause electrostatic discharge.

Drive options

The server supports up to four non-hot-plug or hot-plug LFF drives or up to eight hot-plug SFF drives.

The embedded storage controller supports SATA drive installation only. For SAS drive installation, install a Smart Array card and a Mini-SAS cable option kit. Optional Smart Array controllers support both SATA and SAS drives.

Drive installation guidelines

When adding drives to the server, observe the following general guidelines:

- The system automatically sets all device numbers.
- Populate drive bays, based on the drive numbering sequence. Start from the drive bay with the lowest device number ("Drive numbering" on page 12).
- When drives are grouped together into the same drive array, they must be of the same capacity to provide the greatest storage space efficiency.

Installing a non-hot-plug drive

△ **CAUTION:** To prevent improper cooling and thermal damage, do not operate the server unless all bays are populated with either a component or a blank.

To install the component:

1. Power down the server (on page 16).
2. Remove all power:
   a. Disconnect each power cord from the power source.
   b. Disconnect each power cord from the server.
3. Remove the tower bezel (on page 17).

4. Remove the drive carrier.

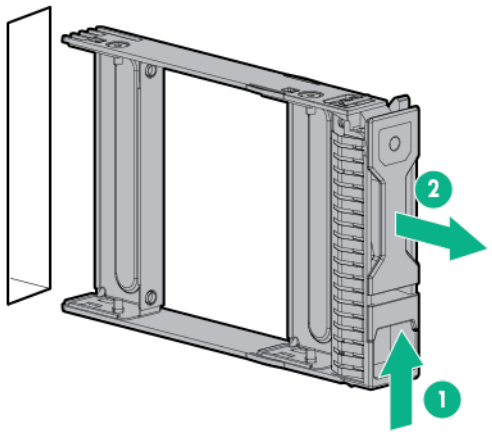

5. Remove the two metal brackets from the drive carrier.

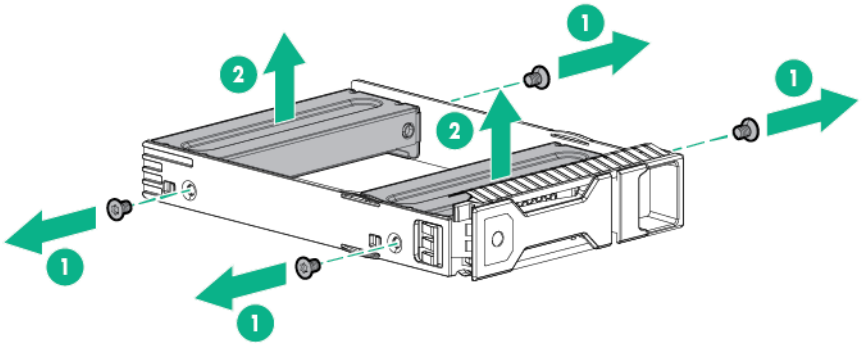

6. Install the drive in the carrier.

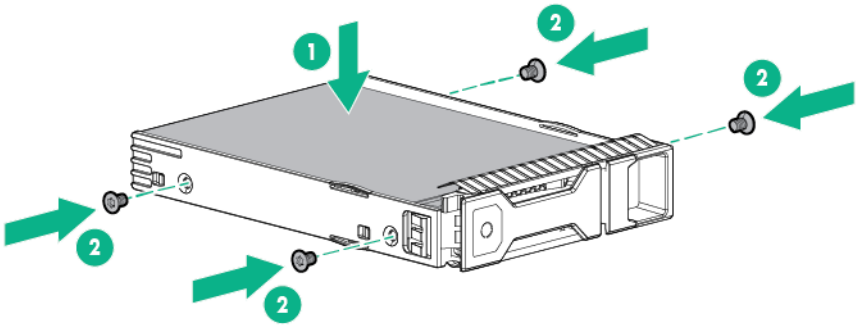

7. Install the drive.

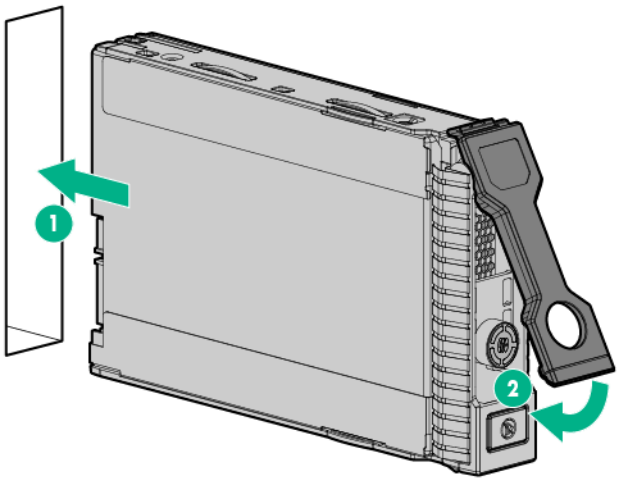

8. Close and lock the tower bezel.
9. Connect each power cord to the server.
10. Connect each power cord to the power source.
11. Power up the server (on page 16).

Installing a hot-plug drive

CAUTION: To prevent improper cooling and thermal damage, do not operate the server unless all bays are populated with either a component or a blank.

To install the component:

1. Remove the tower bezel (on page 17).
2. Remove the drive blank.

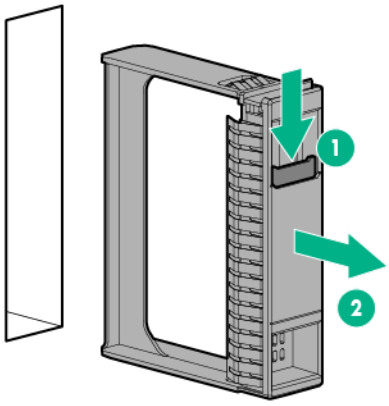

3. Retain the blank for future use.

4. Prepare the drive.

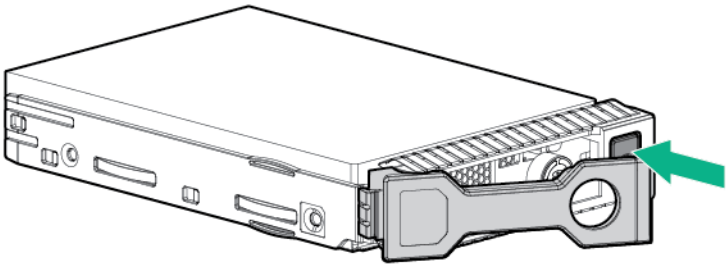

5. Install the drive.

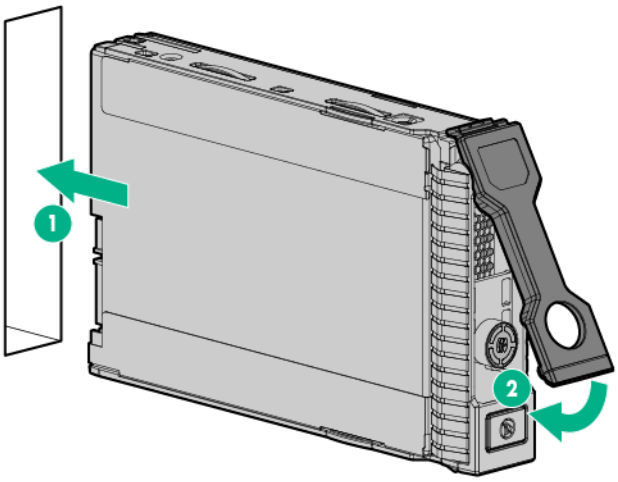

6. Determine the status of the drive from the drive LED definitions ("Hot-plug drive LED definitions" on page 13).
7. Close and lock the tower bezel.

Drive cage options

Four-bay LFF hot-plug drive backplane option

To install the component:

1. Power down the server (on page 16).
2. Remove all power:
   a. Disconnect each power cord from the power source.
   b. Disconnect each power cord from the server.
3. Remove the tower bezel (on page 17).

4. Remove the access panel (on page 18).

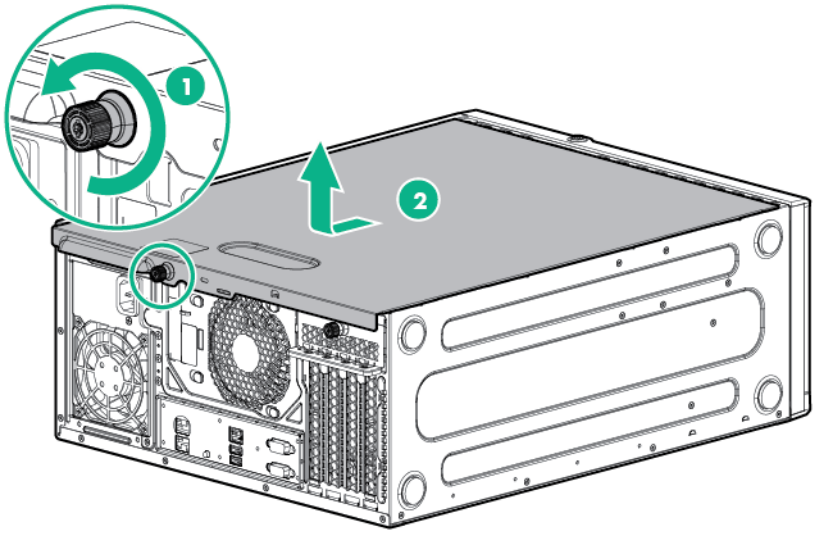

5. Install the drive cage assembly.

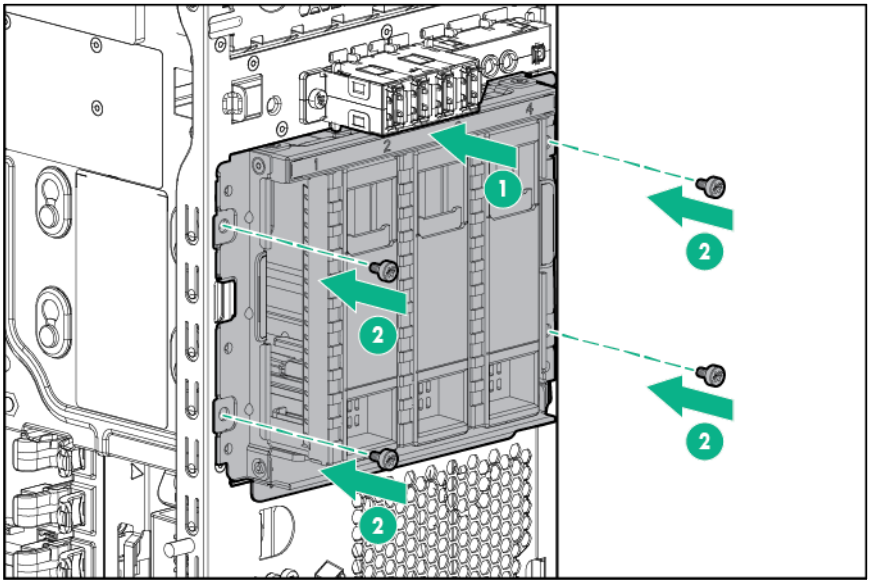

6. Connect the drive backplane cables:
   a. Connect the power cable to the backplane.
   b. Do one of the following:
      — Connect the Mini-SAS cable to the system board (SATA drive support only).

For cable routing information, see "Hot-plug, SATA drive support ("Hot-plug cage to system board, SATA drive support" on page 60)."

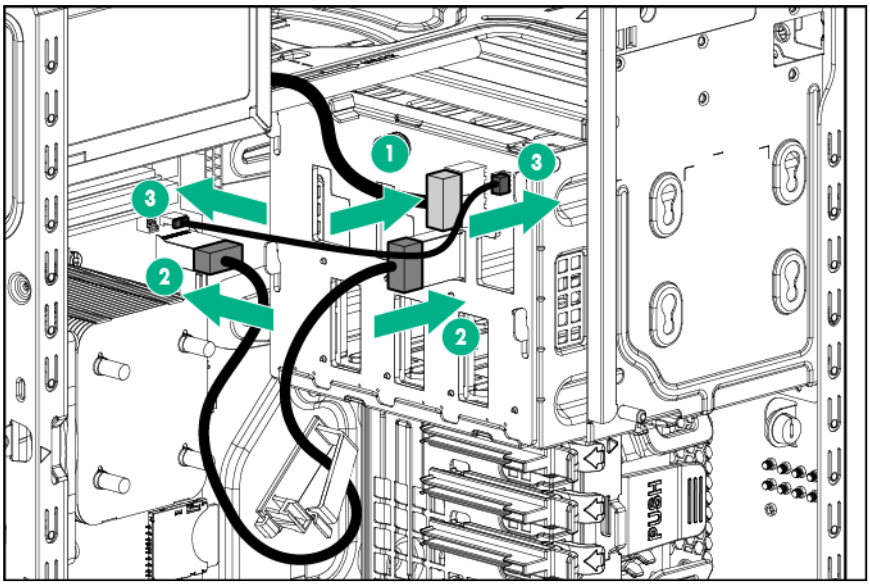

— Connect one end of the Mini-SAS cable to the backplane and the other end to an optional Smart Array controller (SATA and SAS drive support).

For cable routing information, see "Hot-plug SATA and SAS drive support ("Hot-plug cage to controller card, SATA and SAS drive support" on page 60)."

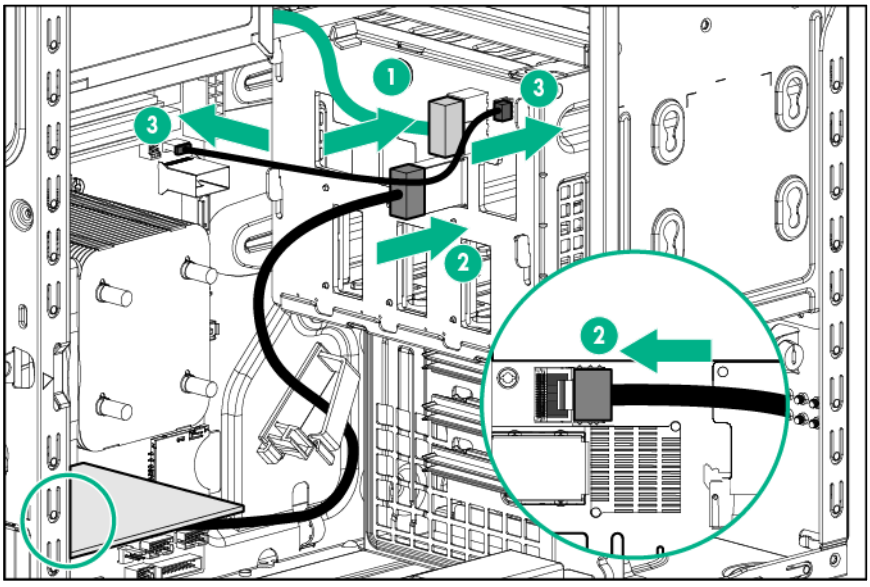

7. Install the drives ("Drive options" on page 27).

△ **CAUTION:** To prevent improper cooling and thermal damage, do not operate the server unless all bays are populated with either a component or a blank.

8. Install the air baffle.
9. Install the access panel (on page 19).
10. Install the tower bezel (on page 17).
11. Connect each power cord to the server.
12. Connect each power cord to the power source.

13. Power up the server (on page 16).

Eight-bay SFF hot-plug drive cage option

To install the component:

1. Power down the server (on page 16).
2. Remove all power:
   a. Disconnect each power cord from the power source.
   b. Disconnect each power cord from the server.
3. Remove the tower bezel (on page 17).
4. Remove the access panel (on page 18).
5. Remove the air baffle (on page 19).
6. Remove all installed drives.
7. Disconnect the drive cage cables:
   a. Disconnect the Mini-SAS cable from the system board.
   b. Disconnect the drive power cable from the 10-pin power supply connector.
8. Remove the LFF drive cage assembly.

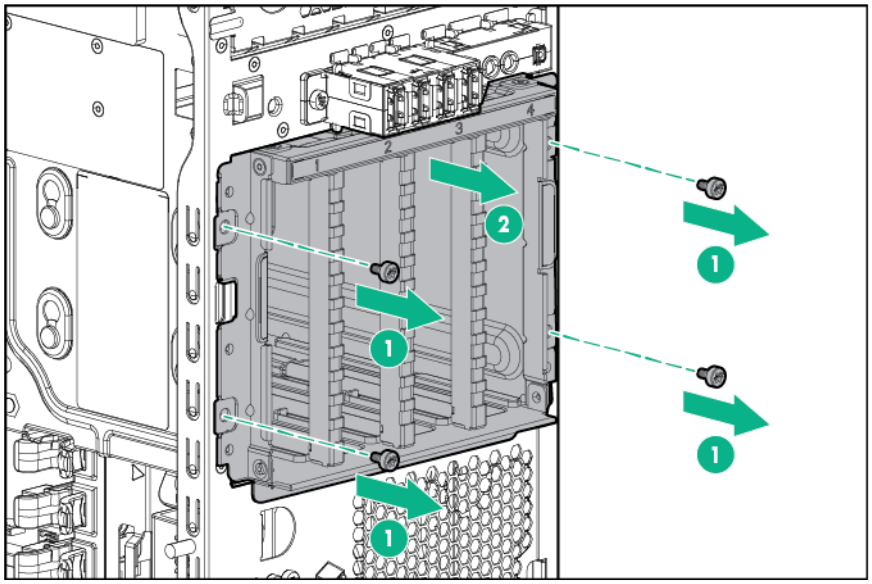

9. Install the SFF drive cage assembly.

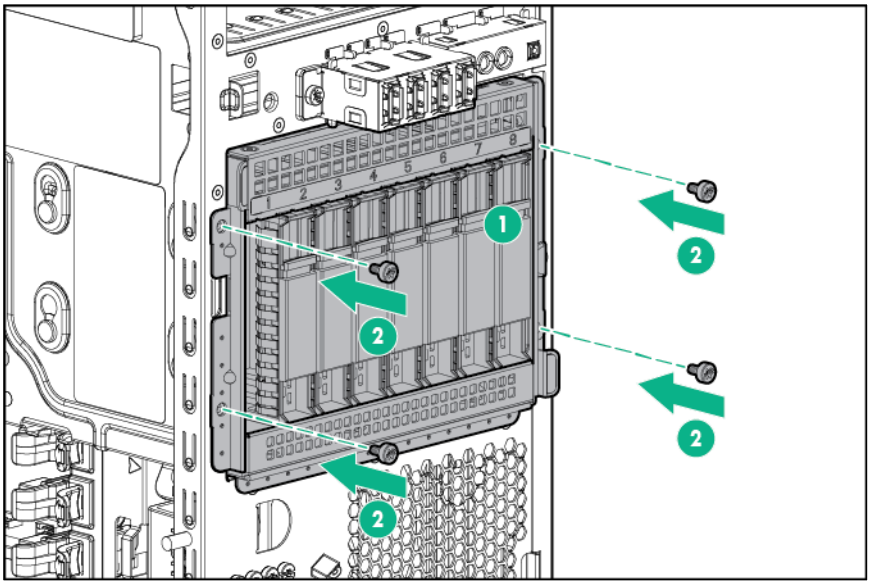

10. Connect the drive backplane cables:
    a. Connect the power cable to the backplane.
    b. Connect the Mini-SAS cables to the backplane and to an optional Smart Array controller.
    For cable routing information, see "Eight-bay SFF drive cabling (on page 61)."

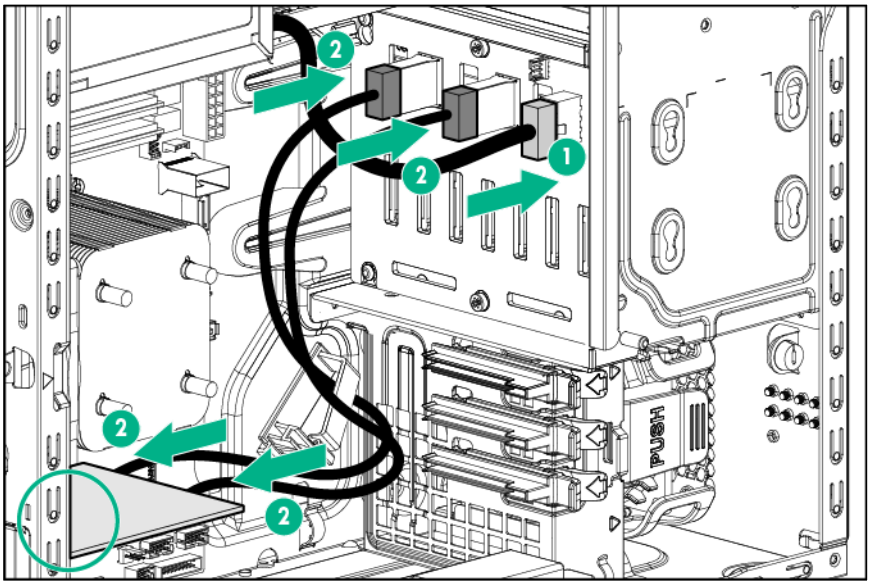

11. Install the drives ("Drive options" on page 27).

△ **CAUTION:** To prevent improper cooling and thermal damage, do not operate the server unless all bays are populated with either a component or a blank.

12. Install the air baffle.
13. Install the access panel (on page 19).
14. Install the tower bezel (on page 17).
15. Connect each power cord to the server.
16. Connect each power cord to the power source.

17. Power up the server (on page 16).

Controller options

The server includes an embedded Smart Array B120i controller. For more information about the controller and its features, see the *Dynamic Smart Array RAID Controller User Guide* on the Hewlett Packard Enterprise website. (http://www.hpe.com/support/DSA_RAID_UG_en)

To configure arrays, see the *HPE Smart Storage Administrator User Guide* on the Hewlett Packard Enterprise website (http://www.hpe.com/info/smartstorage/docs).

For more information about product features, specifications, options, configurations, and compatibility, see the product QuickSpecs on the Hewlett Packard Enterprise website (http://www.hpe.com/info/qs).

The server supports FBWC. FBWC consists of a cache module and a capacitor pack. The DDR cache module buffers and stores data being written by the controller. When the system is powered on, the capacitor pack fully charges in approximately 5 minutes. If a system power failure occurs, a fully charged capacitor pack provides power for up to 80 seconds. During that interval, the controller transfers the cached data from DDR memory to flash memory, where the data remains indefinitely or until a controller retrieves the data.

The data protection and the time limit also apply if a power outage occurs. When power is restored to the system, an initialization process writes the preserved data to the storage drives.

CAUTION: The cache module connector does not use the industry-standard DDR3 mini-DIMMs. Do not use the controller with cache modules designed for other controller models, because the controller can malfunction and you can lose data. Also, do not transfer this cache module to an unsupported controller model, because you can lose data.

CAUTION: To prevent a server malfunction or damage to the equipment, do not add or remove the capacitor pack while an array capacity expansion, RAID level migration, or stripe size migration is in progress.

CAUTION: After the server is powered down, wait for 30 seconds, and then check the amber LED before unplugging the cable from the cache module. If the amber LED flashes after 30 seconds, do not remove the cable from the cache module. The cache module is backing up data. Data will be lost if the cable is detached when the amber LED is still flashing.

IMPORTANT: The capacitor pack might have a low charge when installed. If the pack does have low charge a POST error message appears when the server is powered up, indicating that the capacitor pack is temporarily disabled. No action is necessary. The internal circuitry automatically recharges the capacitors and enables the capacitor pack. This process might take up to 4 hours. During this time, the cache module functions properly but without the performance advantage of the capacitor pack.

Installing a storage controller

IMPORTANT: For additional installation and configuration information, see the documentation that ships with the option.

To install the component:

1. Power down the server (on page 16).
2. Remove all power:
   a. Disconnect each power cord from the power source.
   b. Disconnect each power cord from the server.
3. Unlock the tower bezel (on page 17).

4. Remove the access panel (on page 18).
5. Remove the air baffle (on page 19).
6. If necessary, disconnect the Mini-SAS cable from the system board.
7. Install the storage controller.
8. Connect all necessary internal and external cabling to the option. For more information on these cabling requirements, see the documentation that ships with the option. For internal cable routing information in different drive configurations, see "Storage cabling (on page 59)."
9. Install the air baffle.
10. Install the access panel (on page 19).
11. Install the drives ("Drive options" on page 27).

> **CAUTION:** To prevent improper cooling and thermal damage, do not operate the server unless all bays are populated with either a component or a blank.

12. Lock the tower bezel.
13. Connect each power cord to the server.
14. Connect each power cord to the power source.
15. Power up the server (on page 16).

For more information about the storage controller and its features, select the relevant controller user documentation on the Hewlett Packard Enterprise website (http://www.hpe.com/support/SAC_UG_ProLiantServers_en).

To configure arrays, see the user guide for Smart Array Controllers on the Hewlett Packard Enterprise website (http://www.hpe.com/support/CASAC_RG_en).Upgrade options exist for the integrated array controller. For a list of supported options, see the QuickSpecs on the Hewlett Packard Enterprise website (http://www.hpe.com/support/hpesc).

Installing the FBWC module and capacitor pack

> **CAUTION:** In systems that use external data storage, be sure that the server is the first unit to be powered down and the last to be powered back up. Taking this precaution ensures that the system does not erroneously mark the external drives as failed when the server is powered up.

To install the component:

1. Power down the server (on page 16).
2. Remove all power:
   a. Disconnect each power cord from the power source.
   b. Disconnect each power cord from the server.
3. Unlock the tower bezel (on page 17).
4. Remove the access panel (on page 18).
5. Remove the air baffle (on page 19).

6. Install the cache module on the storage controller.

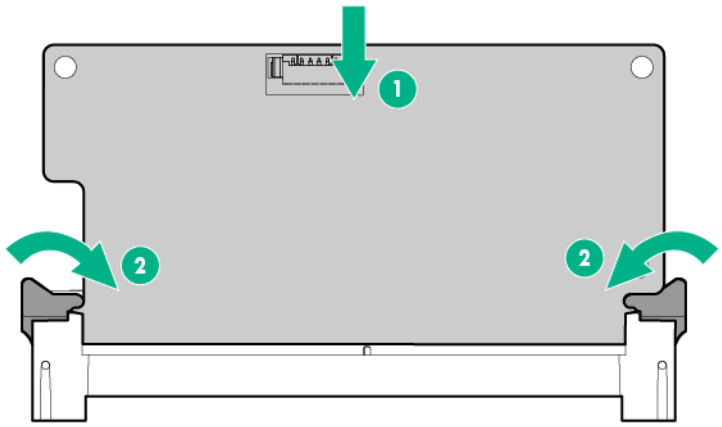

7. Connect the capacitor pack cable to the cache module.

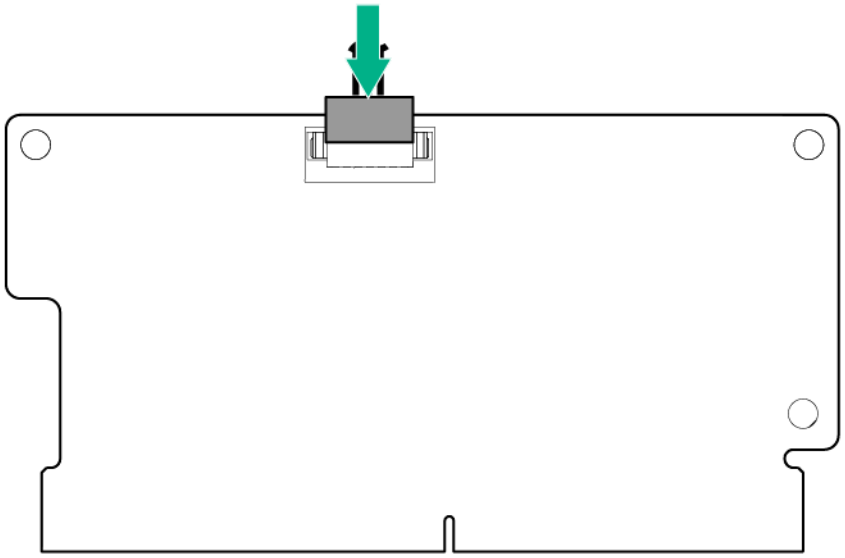

8. Install the storage controller.

9. Install the capacitor pack. For cable routing, see capacitor pack cabling.

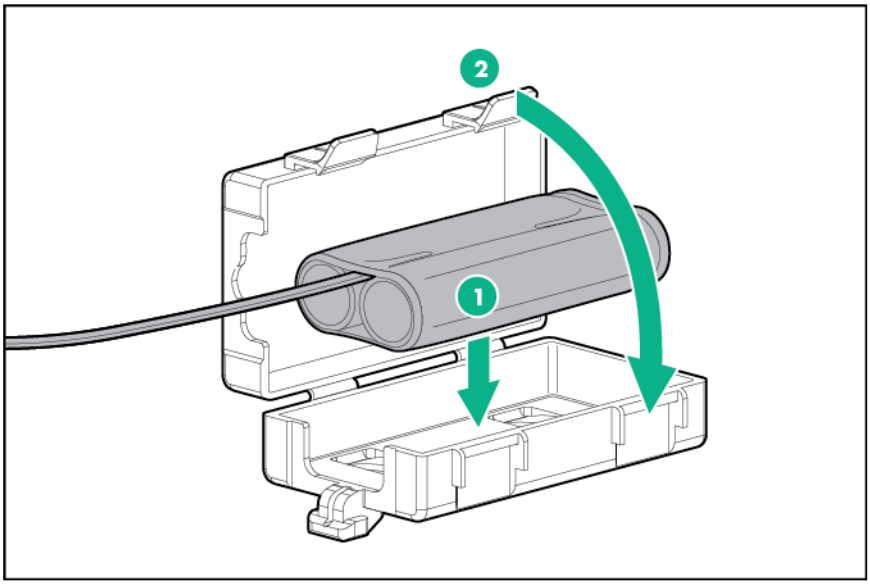

10. Install the air baffle.
11. Install the access panel (on page 19).
12. Lock the tower bezel.
13. Connect each power cord to the server.
14. Connect each power cord to the power source.
15. Power up the server (on page 16).

Optical drive option

To install the component:

1. Power down the server (on page 16).
2. Remove all power:
   a. Disconnect each power cord from the power source.
   b. Disconnect each power cord from the server.
3. Remove the tower bezel (on page 17).
4. Remove the access panel (on page 18).

5. Remove the media bay blank.

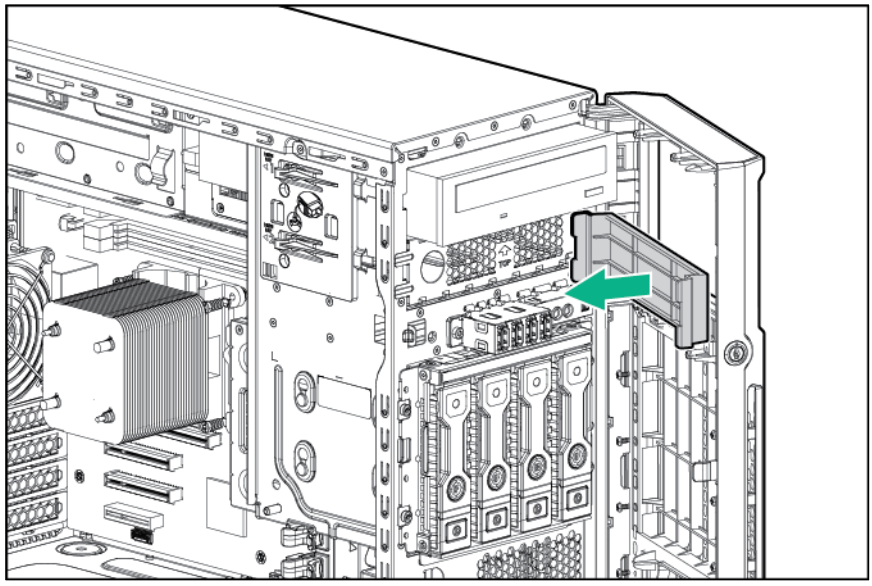

6. Remove the EMI shield.

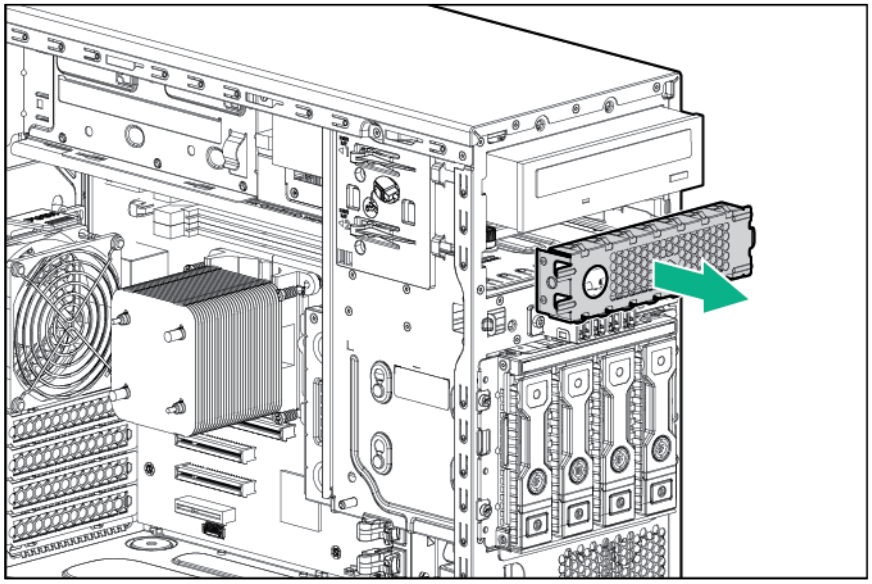

7. Attach the screws to the optical drive.

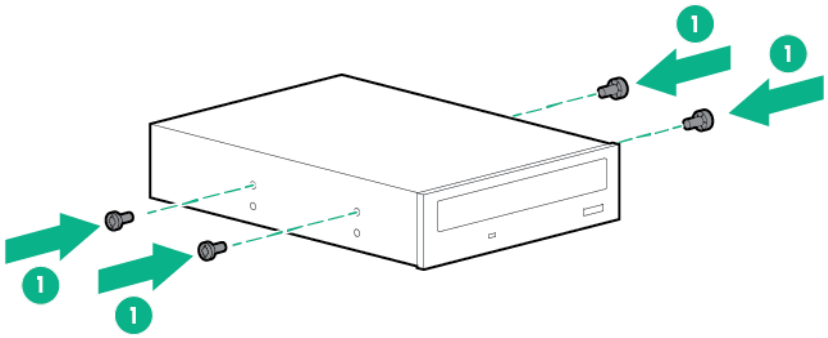

8. Install the optical drive into the media drive bay.

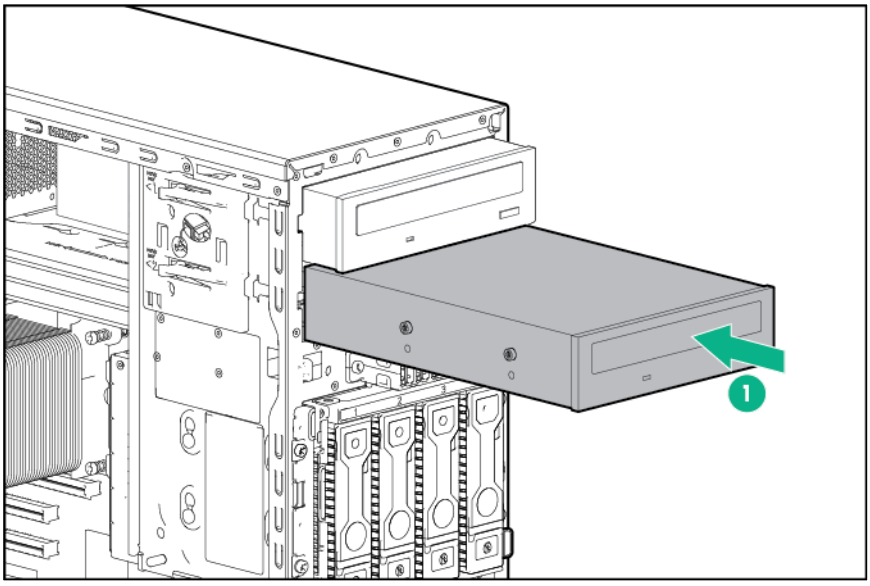

9. Connect the drive cables:
   a. Connect the power cable to the drive.
   b. Connect one end of the SATA cable to the drive and the other end to the system board. For cable routing information, see "Optical drive cabling."

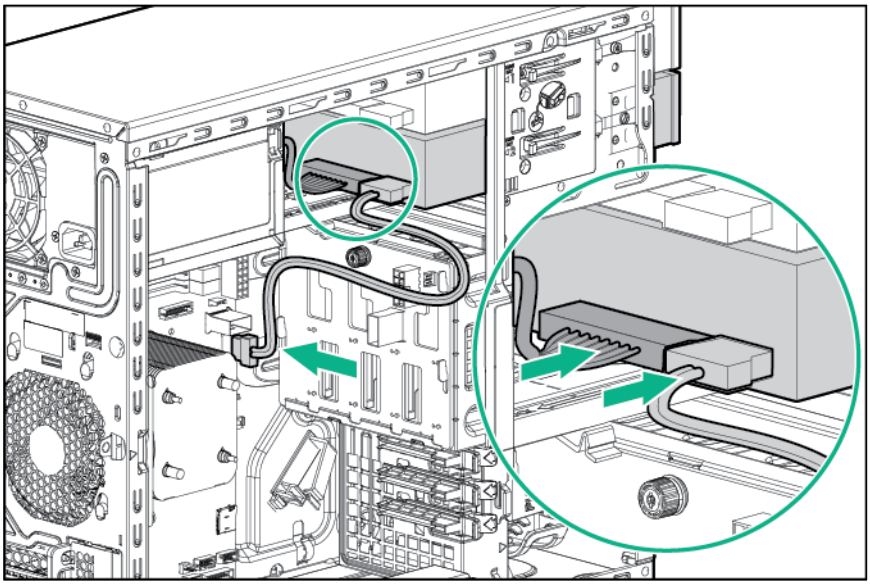

10. Install the access panel (on page 19).
11. Install the tower bezel (on page 17).
12. Connect each power cord to the server.
13. Connect each power cord to the power source.
14. Power up the server (on page 16).

Memory options

IMPORTANT: This server does not support mixing LRDIMMs, RDIMMs, or UDIMMs. Attempting to mix any combination of these DIMMs can cause the server to halt during BIOS initialization.

The server supports single- and dual-rank UDIMMs operating at a speed of up to 1600 MHz. Depending on the processor model and the number of DIMMs installed, the memory clock speed might be reduced to 1333 or 1066 MHz. The server supports a maximum system memory of 32 GB, using 2-GB, 4-GB, and 8-GB UDIMMs.

HPE SmartMemory

HPE SmartMemory, introduced for Gen8 servers, authenticates and unlocks certain features available only on Hewlett Packard Enterprise Qualified memory and verifies whether installed memory has passed Hewlett Packard Enterprise qualification and test processes. Qualified memory is performance-tuned for ProLiant and BladeSystem servers and provides future enhanced support through manageability software.

Certain performance features are unique with SmartMemory. The industry supports UDIMM at 2 DIMMs per channel at 1066 MT/s. SmartMemory supports 2 DIMMs per channel at 1600 MT/s, or 25% greater bandwidth.

DIMM identification

To determine DIMM characteristics, use the label attached to the DIMM and the following illustration and table.

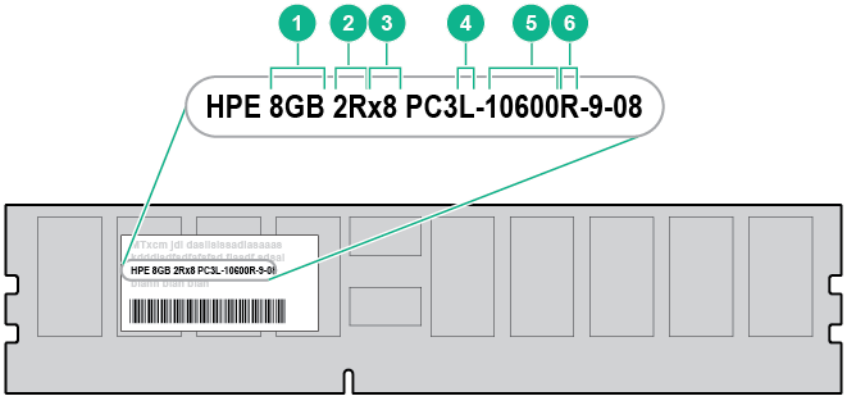

Item	Description	Definition
1	Size	—
2	Rank	1R = Single-rank 2R = Dual-rank 3R = Three-rank 4R = Quad-rank
3	Data width	x4 = 4-bit x8 = 8-bit
4	Voltage rating	L = Low voltage (1.35V) U = Ultra low voltage (1.25V) Blank or omitted = Standard

Item	Description	Definition
5	Memory speed	12800 = 1600-MT/s 10600 = 1333-MT/s 8500 = 1066-MT/s
6	DIMM type	R = RDIMM (registered) E = UDIMM (unbuffered with ECC) L = LRDIMM (load reduced)

For the latest supported memory information, see the QuickSpecs on the Hewlett Packard Enterprise website (http://www.hpe.com/info/qs). At the website, choose the geographic region, and then locate the product by name or product category.

Single-rank and dual-rank DIMMs

DIMM configuration requirements are based on these classifications:

- Single-rank DIMM—One set of memory chips that is accessed while writing to or reading from the memory.
- Dual-rank DIMM—Two single-rank DIMMs on the same module, with only one rank accessible at a time.

The server memory control subsystem selects the proper rank within the DIMM when writing to or reading from the DIMM.

Dual-rank DIMMs provide the greatest capacity with the existing memory technology. For example, if current DRAM technology supports 2-GB single-rank DIMMs, a dual-rank DIMM would be 4 GB.

Memory subsystem architecture

The memory subsystem in this server is divided into two channels. Each channel supports two DIMM slots.

Channel	Population order	Slot number
1	C A	1 2
2	D B	3 4

DIMM slots are identified by number and by letter. Letters identify the population order. Slot numbers are reported by ROM messages during boot and are used for error reporting.

For the DIMM slot locations, see "DIMM slot locations (on page 11)."

ECC memory

The server supports the standard ECC memory correction mode. Standard ECC can correct single-bit memory errors and detect multibit memory errors. When multibit errors are detected, the error is signaled to the server and causes the server to halt.

General DIMM slot population guidelines

- The server has four DIMM slots.
- The server supports two channels with two DIMM slots per channel.
  - Memory channel 1 consists of the two DIMMs that are closest to the processor.
  - Memory channel 2 consists of the two DIMMs that are farthest from the processor.

- A white DIMM slot indicates the first slot of a channel (2-A, 4-B).
- Memory speed support depends on the type of processor installed. For more information, see the technical specification of the installed processor.
- The server supports up to 2133 MT/s ECC UDIMMs.
- The server supports up to 64 GB (4x16 GB) UDIMMs.
- The server does not support:
  - RDIMMs
  - Non-ECC UDIMMs
- When installing DIMMs:
  - Populate the DIMM slots in this sequence: 2-A, 4-B, 1-C, 3-D.
  - Use HPE-qualified UDIMMs.

Installing a DIMM

1. Power down the server (on page 16).
2. Remove all power:
   a. Disconnect each power cord from the power source.
   b. Disconnect each power cord from the server.
3. Unlock the tower bezel (on page 17).
4. Remove the access panel (on page 18).
5. Remove the air baffle (on page 19).
6. Open the DIMM slot latches.
7. Install the DIMM.

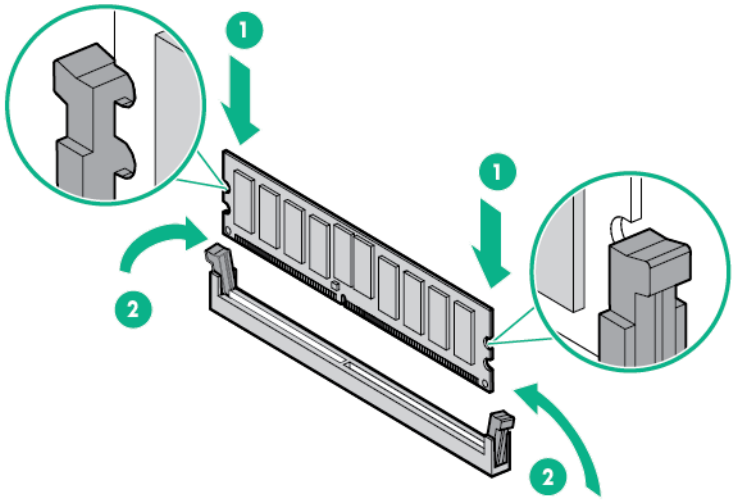

8. Install the air baffle.
9. Install the access panel (on page 19).
10. Lock the tower bezel.
11. Connect each power cord to the server.
12. Connect each power cord to the power source.
13. Power up the server (on page 16).

After installing the DIMMs, to configure memory protection mode, use RBSU ("HPE ROM-Based Setup Utility" on page 70).

Expansion board options

The server has both full-height and low-profile expansion slots.

> **CAUTION:** To prevent damage to the server or expansion boards, power down the server and remove all AC power cords before removing or installing the PCI riser cage.

To install the component:

1. Power down the server (on page 16).
2. Remove all power:
   a. Disconnect each power cord from the power source.
   b. Disconnect each power cord from the server.
3. Unlock the tower bezel (on page 17).
4. Remove the access panel (on page 18).
5. Remove the air baffle (on page 19).
6. Remove the expansion slot cover retainer.

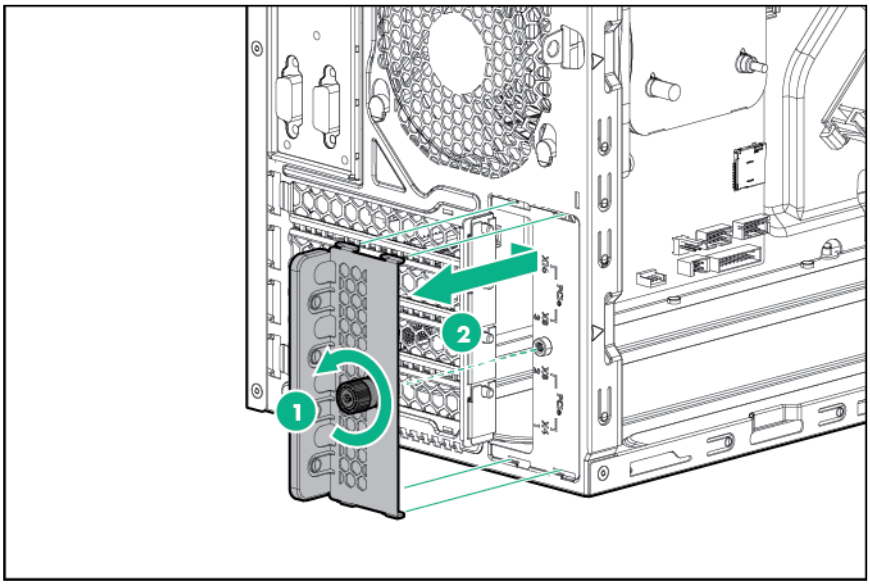

7. Identify the expansion slot compatible with the new option, and then remove the cover opposite that slot.

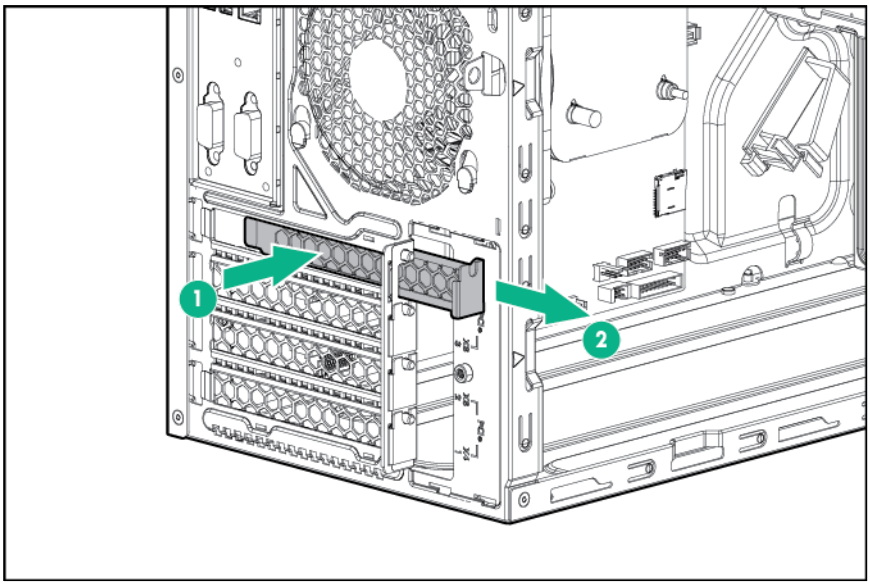

8. If installing a full-length expansion board, remove the board retainer.

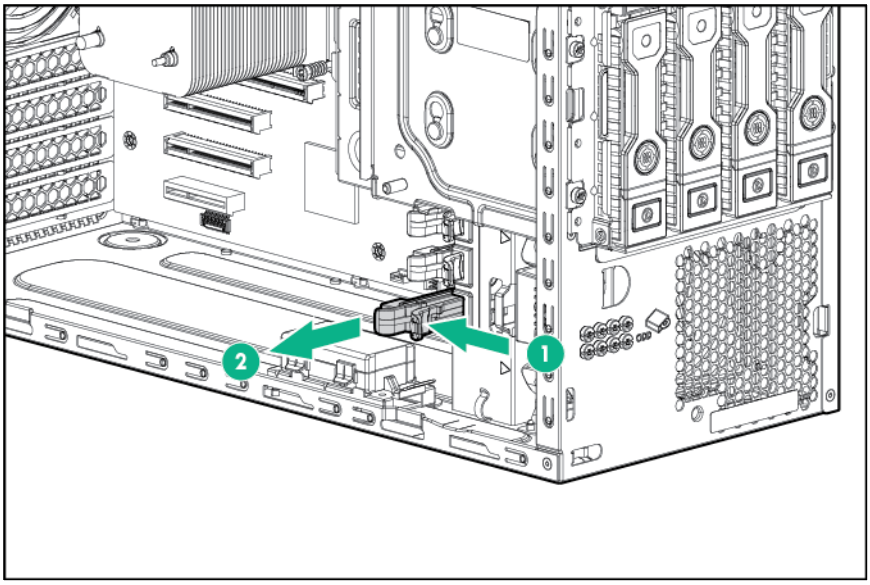

9. Install the expansion board.

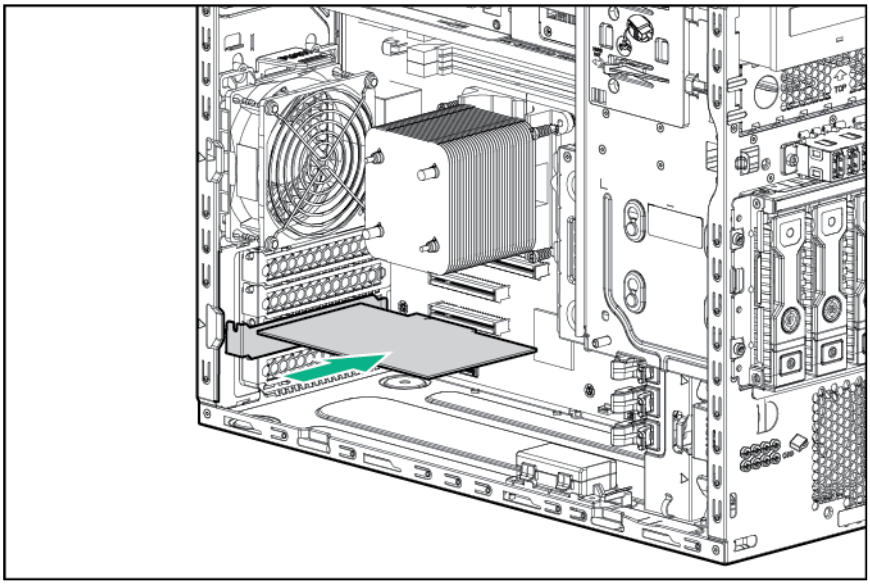

10. If installing a full-length expansion board, install the board retainer that was removed.

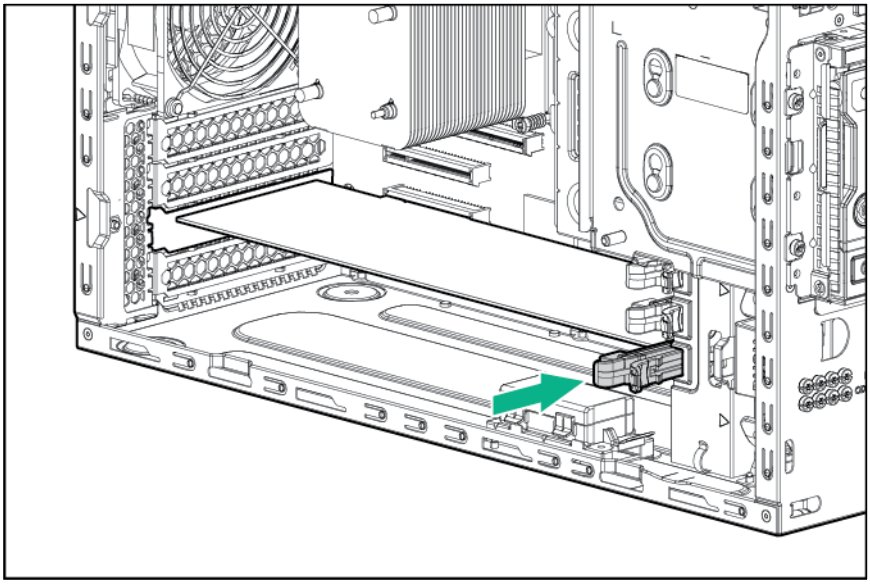

11. Install the expansion slot cover retainer.

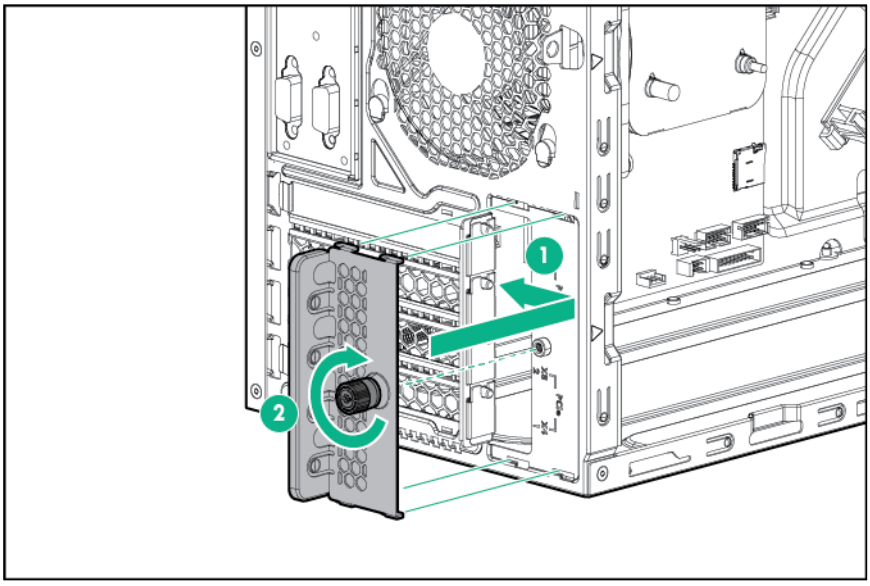

12. Connect all necessary internal and external cables to the expansion board. For more information on these cabling requirements, see the documentation that ships with the option.
13. Install the air baffle.
14. Install the access panel (on page 19).
15. Lock the tower bezel.
16. Connect each power cord to the server.
17. Connect each power cord to the power source.
18. Power up the server (on page 16).

HPE Trusted Platform Module option

For more information about product features, specifications, options, configurations, and compatibility, see the product QuickSpecs on the Hewlett Packard Enterprise website (http://www.hpe.com/info/qs).

Use these instructions to install and enable a TPM on a supported server. This procedure includes three sections:

1. Installing the Trusted Platform Module board.
2. Retaining the recovery key/password (on page 49).
3. Enabling the Trusted Platform Module (on page 50).

   Enabling the TPM requires accessing RBSU ("HPE ROM-Based Setup Utility" on page 70). For more information about RBSU, see the Hewlett Packard Enterprise website. (http://www.hpe.com/support/rbsu)

TPM installation requires the use of drive encryption technology, such as the Microsoft Windows BitLocker Drive Encryption feature. For more information on BitLocker, see the Microsoft website (http://www.microsoft.com).

△ **CAUTION:** Always observe the guidelines in this document. Failure to follow these guidelines can cause hardware damage or halt data access.

When installing or replacing a TPM, observe the following guidelines:

- Do not remove an installed TPM. Once installed, the TPM becomes a permanent part of the system board.

- When installing or replacing hardware, Hewlett Packard Enterprise service providers cannot enable the TPM or the encryption technology. For security reasons, only the customer can enable these features.
- When returning a system board for service replacement, do not remove the TPM from the system board. When requested, Hewlett Packard Enterprise Service provides a TPM with the spare system board.
- Any attempt to remove an installed TPM from the system board breaks or disfigures the TPM security rivet. Upon locating a broken or disfigured rivet on an installed TPM, administrators should consider the system compromised and take appropriate measures to ensure the integrity of the system data.
- When using BitLocker, always retain the recovery key/password. The recovery key/password is required to enter Recovery Mode after BitLocker detects a possible compromise of system integrity.
- Hewlett Packard Enterprise is not liable for blocked data access caused by improper TPM use. For operating instructions, see the encryption technology feature documentation provided by the operating system.

Installing the Trusted Platform Module board

WARNING: To reduce the risk of personal injury, electric shock, or damage to the equipment, remove the power cord to remove power from the server. The front panel Power On/Standby button does not completely shut off system power. Portions of the power supply and some internal circuitry remain active until AC power is removed.

WARNING: To reduce the risk of personal injury from hot surfaces, allow the drives and the internal system components to cool before touching them.

To install the component:

1. Power down the server (on page 16).
2. Unlock the tower bezel (on page 17).
3. Remove the access panel (on page 18).
4. Remove the air baffle (on page 19).

CAUTION: Any attempt to remove an installed TPM from the system board breaks or disfigures the TPM security rivet. Upon locating a broken or disfigured rivet on an installed TPM, administrators should consider the system compromised and take appropriate measures to ensure the integrity of the system data.

5. Install the TPM board. Press down on the connector to seat the board ("System board components" on page 10).

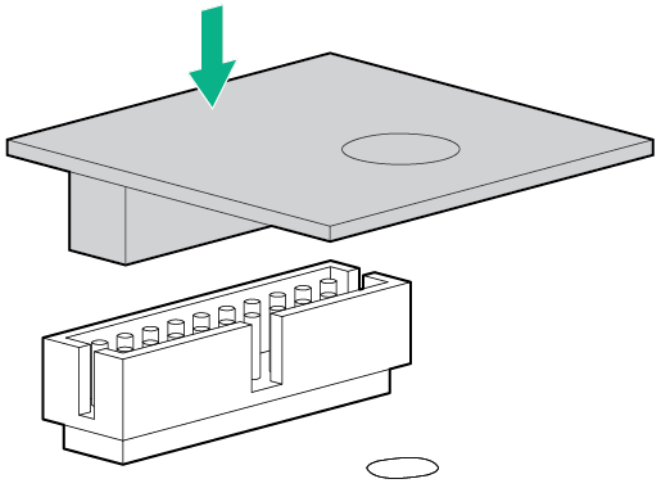

6. Install the TPM security rivet by pressing the rivet firmly into the system board.

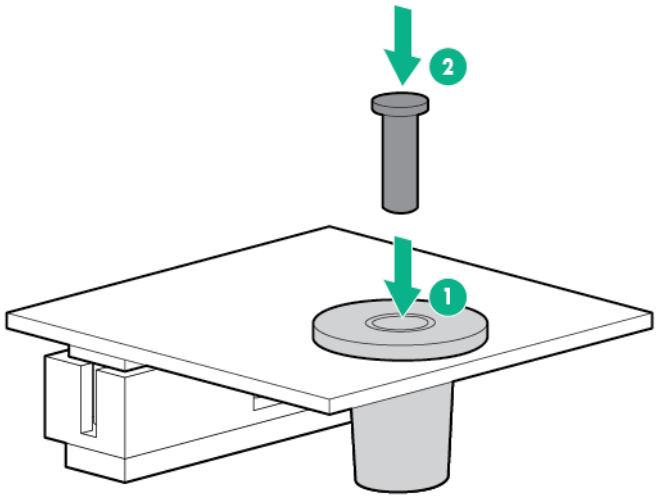

7. Install the air baffle.
8. Install the access panel (on page 19).
9. Lock the tower bezel.
10. Connect each power cord to the server.
11. Connect each power cord to the power source.
12. Power up the server (on page 16).

Retaining the recovery key/password

The recovery key/password is generated during BitLocker setup, and can be saved and printed after BitLocker is enabled. When using BitLocker, always retain the recovery key/password. The recovery key/password is required to enter Recovery Mode after BitLocker detects a possible compromise of system integrity.

To help ensure maximum security, observe the following guidelines when retaining the recovery key/password:

- Always store the recovery key/password in multiple locations.
- Always store copies of the recovery key/password away from the server.
- Do not save the recovery key/password on the encrypted hard drive.

Enabling the Trusted Platform Module

1. When prompted during the start-up sequence, access RBSU by pressing the **F9** key.
2. From the Main Menu, select **Server Security**.
3. From the Server Security Menu, select **Trusted Platform Module**.
4. From the Trusted Platform Module Menu, select **TPM Functionality**.
5. Select **Enable**, and then press the **Enter** key to modify the TPM Functionality setting.
6. Press the **Esc** key to exit the current menu, or press the **F10** key to exit RBSU.
7. Reboot the server.
8. Enable the TPM in the OS. For OS-specific instructions, see the OS documentation.

> △ **CAUTION:** When a TPM is installed and enabled on the server, data access is locked if you fail to follow the proper procedures for updating the system or option firmware, replacing the system board, replacing a hard drive, or modifying OS application TPM settings.

For more information on firmware updates and hardware procedures, see the *HP Trusted Platform Module Best Practices White Paper* on the Hewlett Packard Enterprise website (http://www.hpe.com/support/hpesc).

For more information on adjusting TPM usage in BitLocker™, see the Microsoft website (http://technet.microsoft.com/en-us/library/cc732774.aspx).

RPS enablement option

Install the RPS enablement option to improve power efficiency and enable power redundancy. Power redundancy requires the installation of two power supply modules. Power supply modules are separately purchased options and are not part of the RPS enablement kit. When the RPS enablement option is installed, no option can be installed in the lower media drive bay.

> △ **CAUTION:** To prevent improper cooling and thermal damage, do not operate the server unless all bays are populated with either a component or a blank.

To install the component:

1. Power down the server (on page 16).
2. Remove all power:
   a. Disconnect each power cord from the power source.
   b. Disconnect each power cord from the server.
3. Remove the tower bezel (on page 17).
4. Remove the access panel (on page 18).
5. Disconnect all power cables from the drives and system board.

6. Remove the power supply.

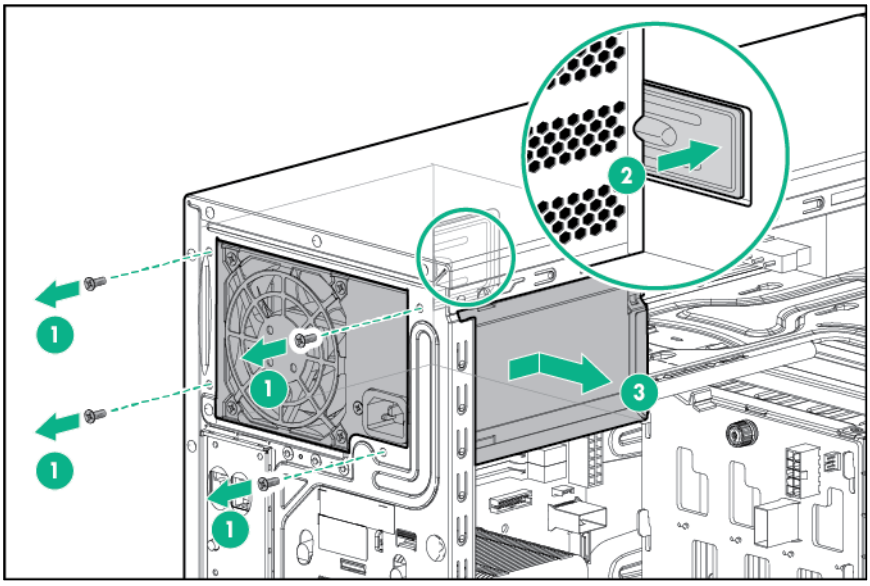

7. Disconnect all cables from installed media drives.
8. Remove all installed devices and any EMI shields from the media drive bays.

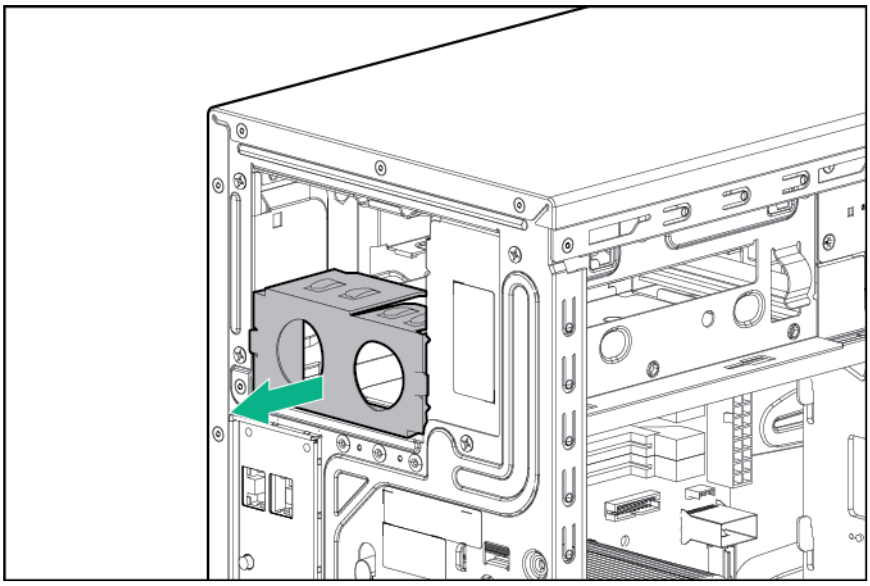

9. Install the RPS cage.

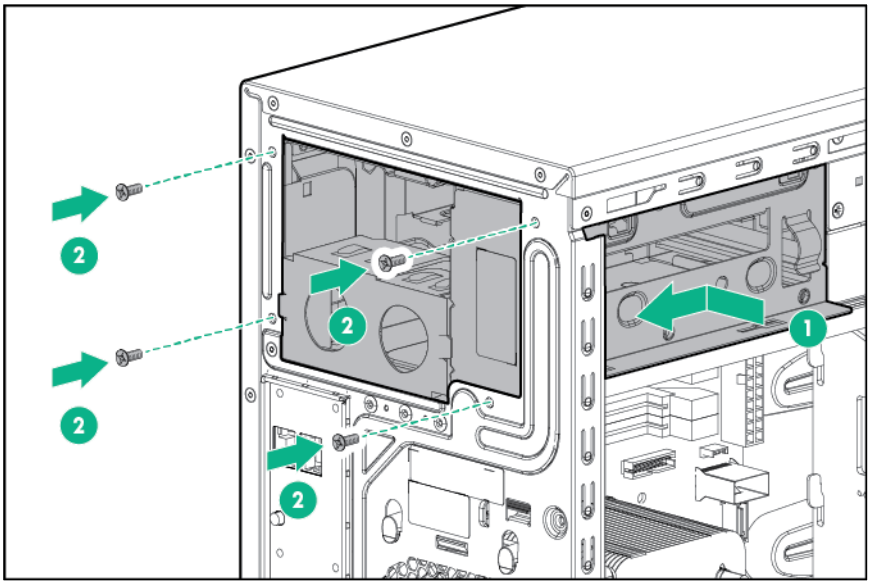

10. Insert the RPS backplane module cables into the media drive cage, and then slide the module into the lower media drive bay. Align the left edge of the module with the guide mark on the bay.

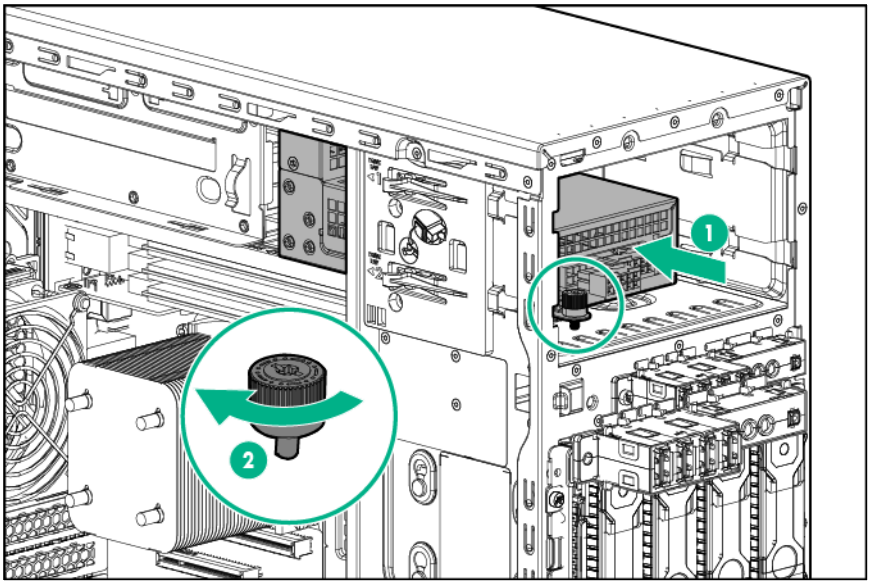

11. Connect the eight-pin to four-pin adapter cable to the eight-pin power supply connector of the RPS backplane module.
12. Connect the RPS cables to the system board. For detailed cabling information, see "Redundant power supply cabling (on page 63)."

    The RPS cable assembly contains one extra cable which is not utilized in this server. Ensure that the extra cable is out of the way of the connected RPS backplane module cables.

13. Install a common slot power supply in the upper bay of the RPS cage.

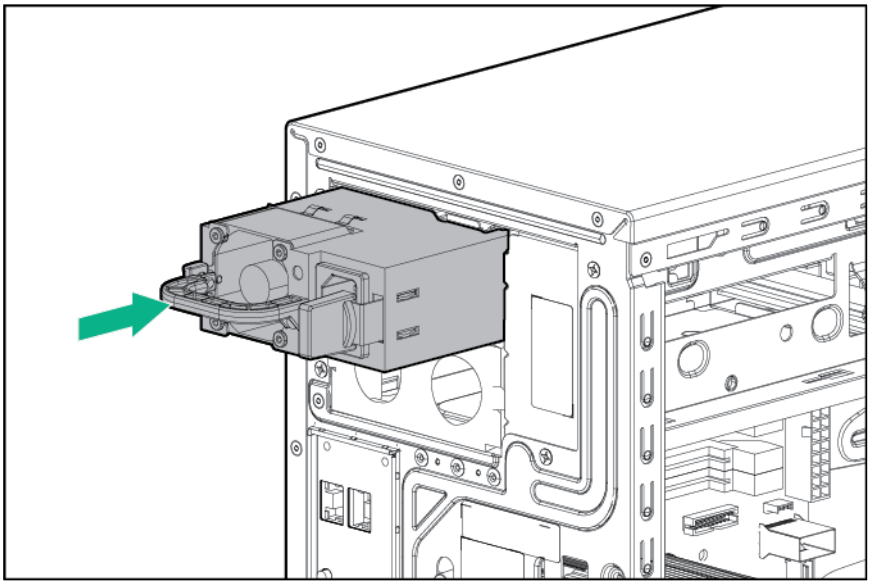

CAUTION: The default and redundant power supplies in the server must have the same output power capacity. Verify that all power supplies have the same part number and label color. The system becomes unstable and might shut down if it detects mismatched power supplies.

14. For improved power efficiency and redundancy, install two common slot power supplies:
    a. Remove the EMI shield.

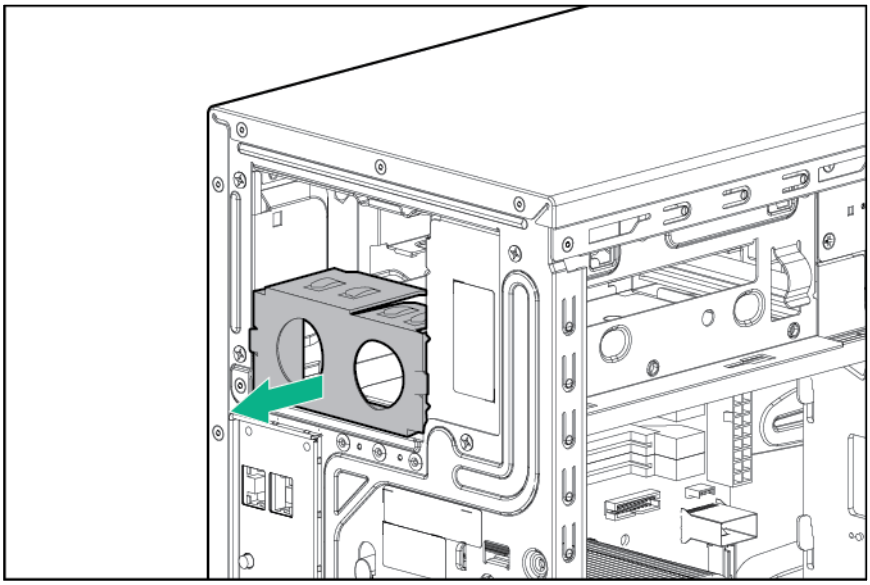

b. Install the common slot power supplies.

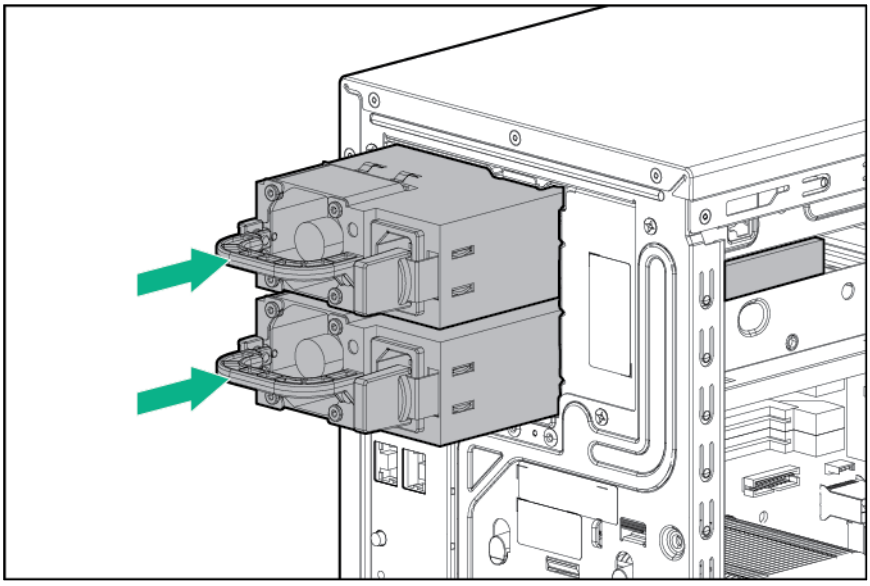

15. Install any device originally installed in the upper media drive bay.
16. Install the EMI shield in the lower media drive bay.
17. Install the access panel (on page 19).
18. If the lower media bay blank is not attached to the tower bezel, install it.
19. Lock the tower bezel.
20. Connect each power cord to the server.
21. Connect each power cord to the power source.
22. Power up the server (on page 16).

Setting up the HPE PS1810-24G Switch (optional)

If you intend to use the server with the companion HPE PS 1810-24G Switch, follow the procedures in this section.

For more information on switch-related settings and operational procedures, see the documentation for your switch model on the Hewlett Packard Enterprise website (http://www.hpe.com/networking/support).

Mounting the switch with the server

Mount the switch in a rack, on a wall, or on top of or under a horizontal surface. For detailed instructions, see the *HPE PS1810-24G Switch Quick Setup Guide*.

Connecting the server to the switch

You can connect the server to the switch through the following methods:

- A simple Ethernet connection with no iLO functionality
- An Ethernet connection with iLO functionality, using the dedicated iLO connector
- An Ethernet connection with iLO functionality, using the shared iLO connector

To establish a simple Ethernet connection:

1. Connect an Ethernet cable to the switch, and then connect the cable to a network jack.
2. Connect an Ethernet cable to the server NIC connector 1 or 2.

3. Connect the cable to any switch network port.

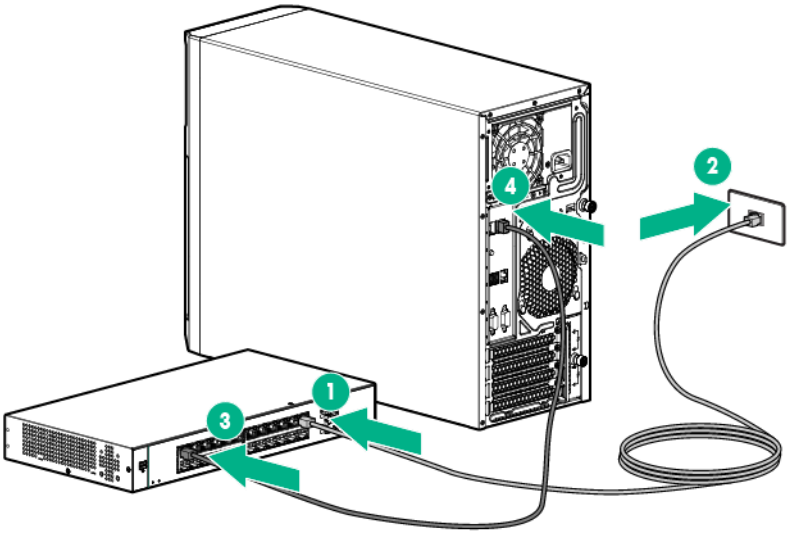

To establish an Ethernet connection with iLO functionality by using the dedicated iLO connector:

1. Connect an Ethernet cable to the switch, and then connect the cable to a network jack.
2. Connect an Ethernet cable to the server dedicated iLO connector, and then connect the cable to any switch network port.

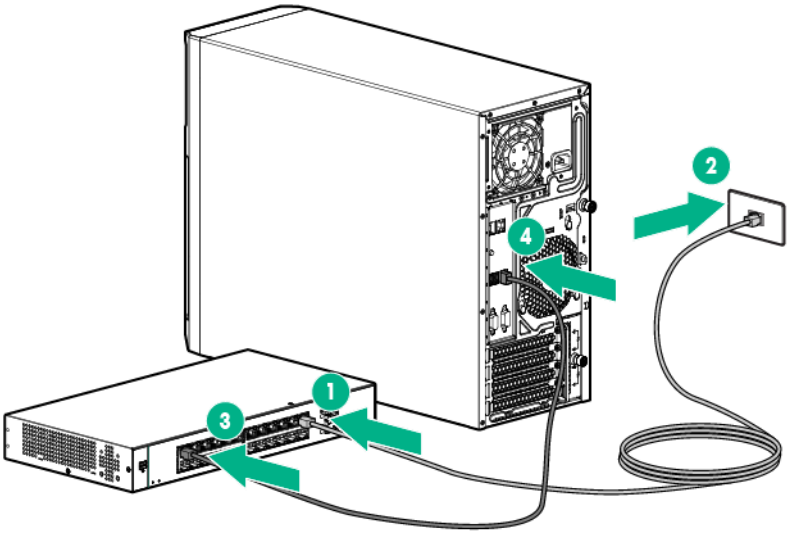

Completing the switch Self-Test

1. Connect the power adapter to the switch.
2. Connect the power adapter to the AC power source.
3. Check the status of the switch Power LED. This LED is solid green to indicate that the power connection is established.
4. Check the status of the following switch LEDs:
   - Link/Act LED on the switch network port that is being used—Initially, solid green to indicate successful connection, and then flashing green to indicate active communication with the network.

- Fault LED—Remains off to indicate successful Self-Test completion.

For more information on the location of the switch LEDs and their behavior during the Self-Test process, see the switch documentation.

Completing the switch setup

After the Ethernet cable connection is made, check the network LED status on both the server and the switch to confirm successful connection:

- In the server front panel, the NIC status LED —Solid green

In the switch, the Link/Act LED on the network connector used—Initially, solid green to indicate successful connection, and then flashing green to indicate active communication with the network.To establish an Ethernet connection with iLO functionality by using the shared iLO connector:

1. Access the iLO RBSU by rebooting the server, and then pressing **F8** during POST.
2. Under the **Network** menu, select the **NIC and TCP/IP** option.

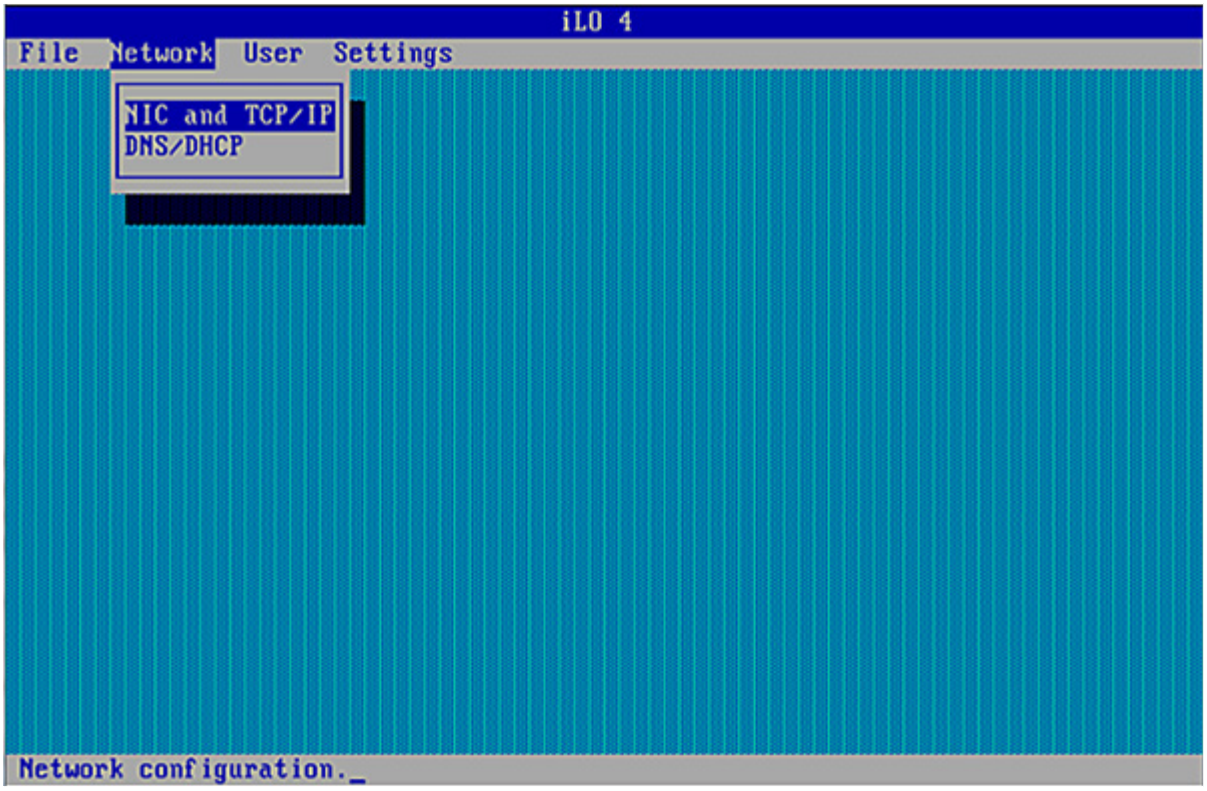

3. Set the **Network Interface Adapter** field to **Shared Network Port — LOM**.

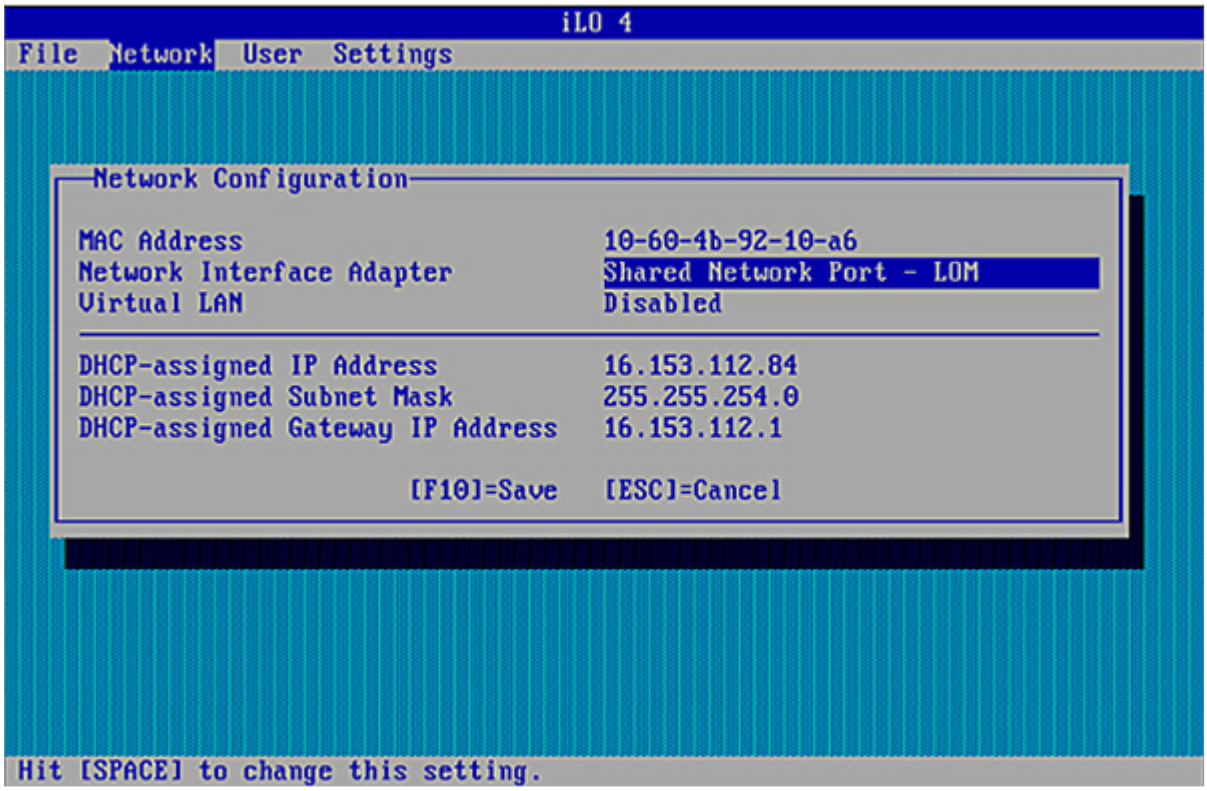

4. To save the change, press **F10**.
5. To close the iLO RBSU, under the **File** menu, select the **Exit** option.
6. Connect an Ethernet cable to the switch, and then connect the cable to a network jack.
7. Connect an Ethernet cable to the server NIC 1/shared iLO connector, and then connect the cable to any switch network port.

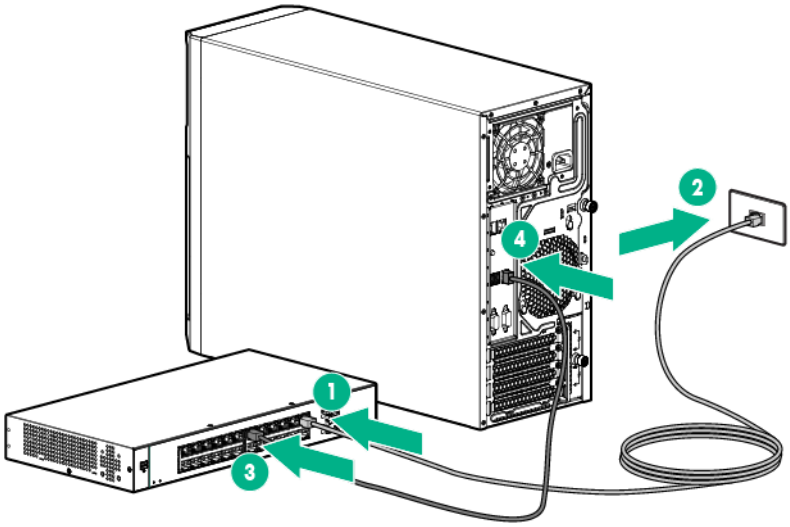

Cabling

Cabling overview

This section provides guidelines to help make informed decisions about cabling the server and hardware options to optimize performance.

For information on cabling peripheral components, see the white paper on high-density deployment at the Hewlett Packard Enterprise website. (http://www.hpe.com/products/servers/platforms)

△ **CAUTION:** When routing cables, always be sure that the cables are not in a position where they can be pinched or crimped.

System fan cabling

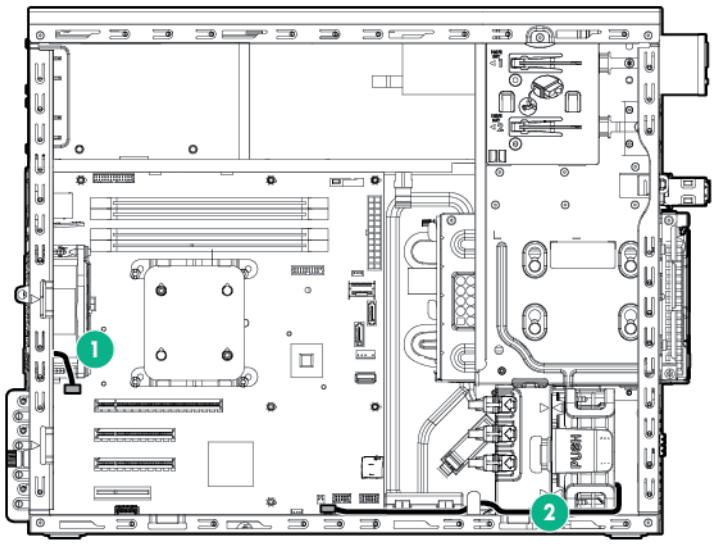

Item	Description
1	Rear system fan cable (fan 1)
2	Front system fan cable (fan 2)

Storage cabling

Four-bay LFF drive cabling

Non-hot-plug cage to system board, SATA drive support only

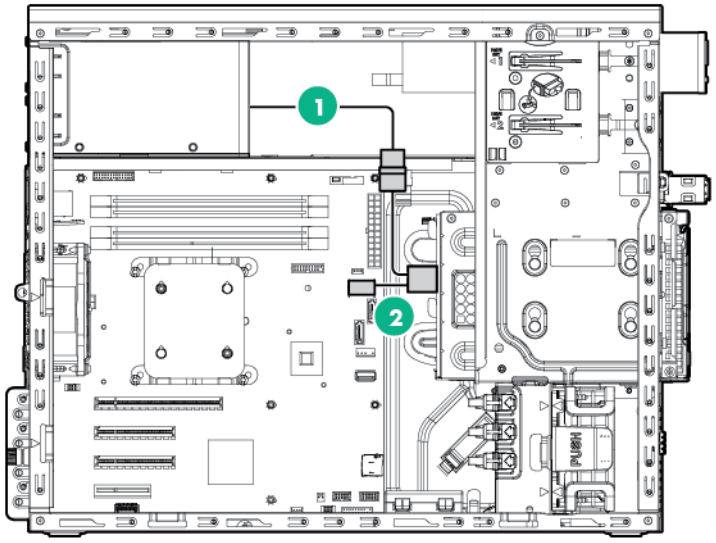

Item	Description
1	Drive cage power cable
2	Mini-SAS cable

Non-hot-plug cage to controller card, SATA and SAS drive support

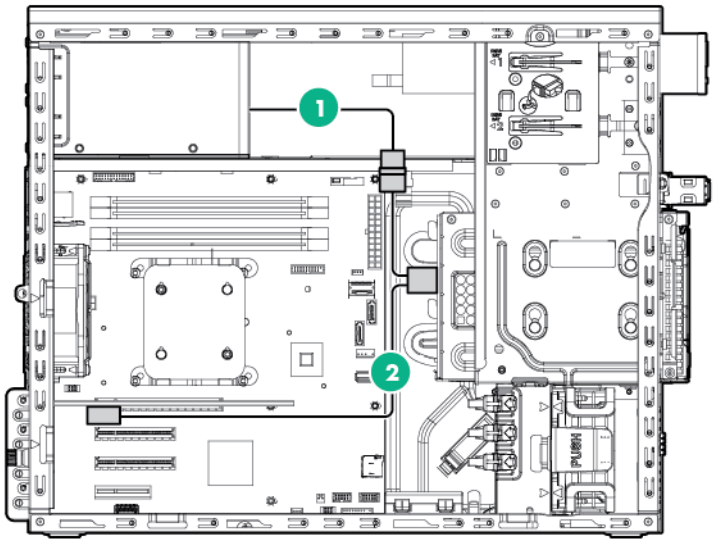

Item	Description
1	Drive cage power cable
2	Mini-SAS cable

Hot-plug cage to system board, SATA drive support

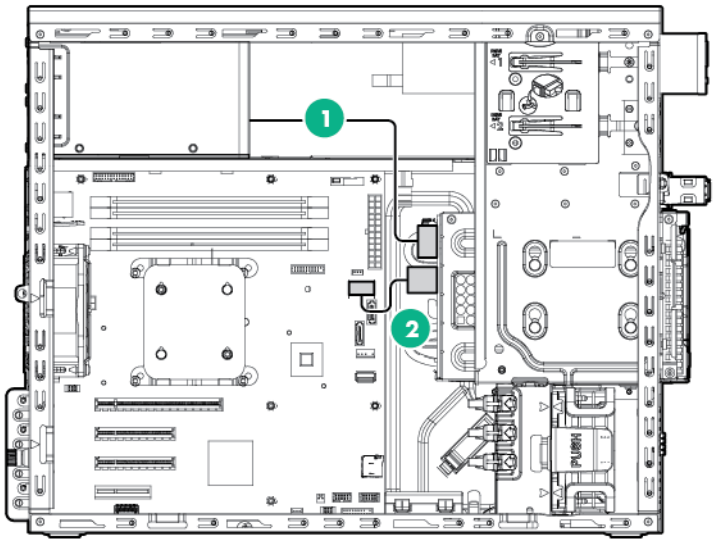

Item	Description
1	Drive cage power cable
2	Mini-SAS cable

Hot-plug cage to controller card, SATA and SAS drive support

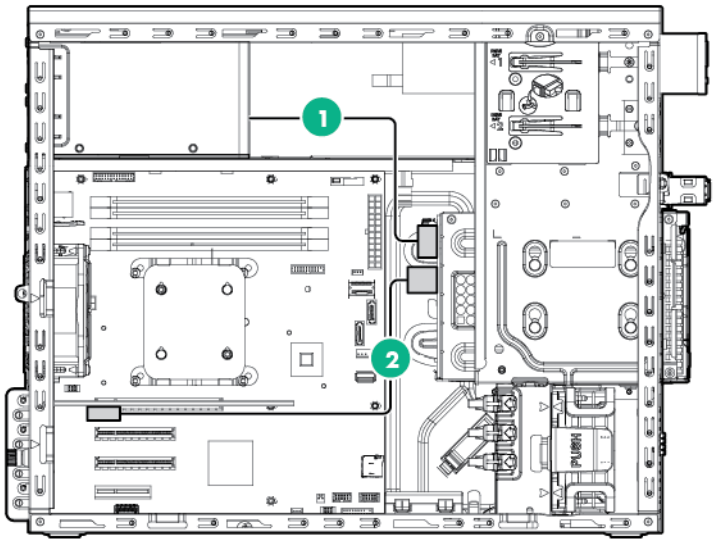

Item	Description
1	Drive cage power cable
2	Mini-SAS cable

Eight-bay SFF drive cabling

This drive configuration supports hot-plug SATA and SAS drives.

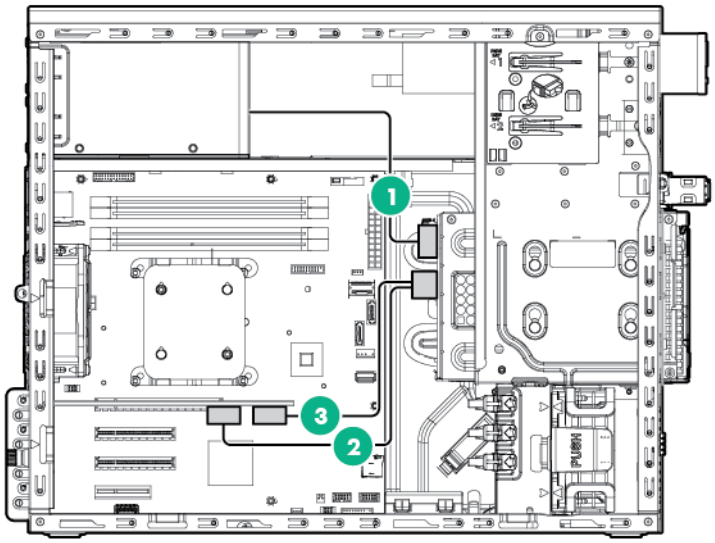

Item	Description
1	Drive cage power cable
2	Mini-SAS cable
3	Mini-SAS cable

Optical drive cabling

- Optical drive in a nonredundant power configuration

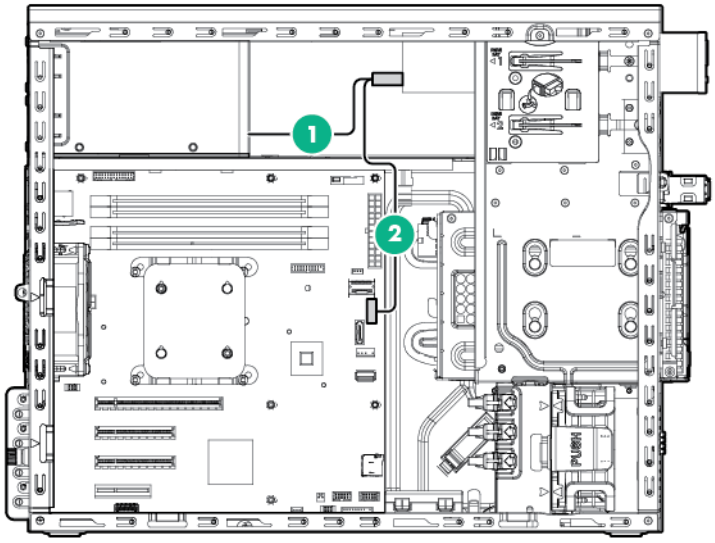

Item	Description
1	Optical drive power cable

Item	Description
2	SATA cable

- Optical drive in a redundant power configuration

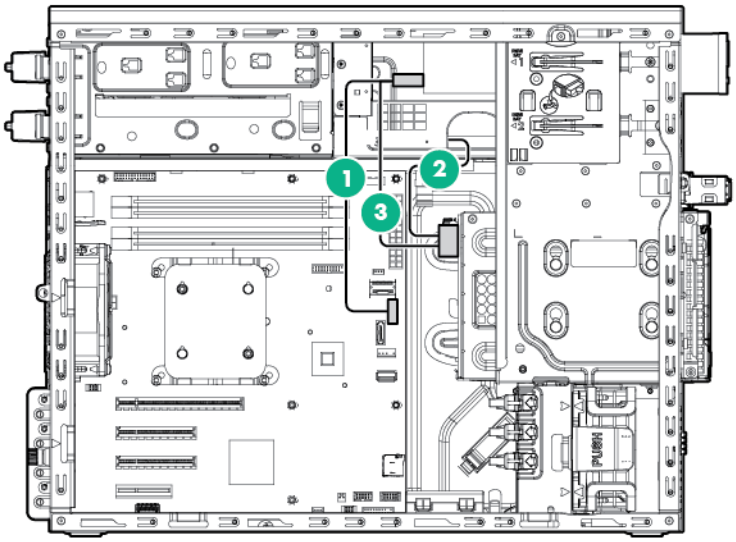

Item	Description
1	SATA cable
2	Drive cage power cable
3	Optical drive power cable

Power supply cabling

Integrated power supply cabling

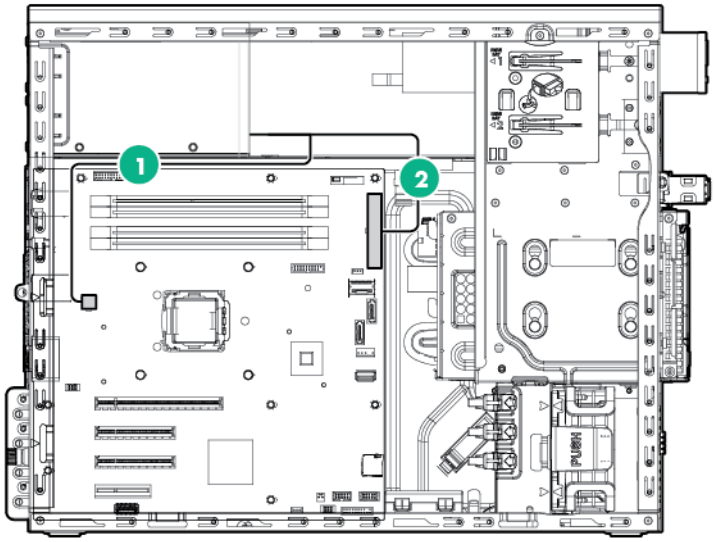

Item	Description
1	4-pin power supply cable
2	24-pin power supply cable

Redundant power supply cabling

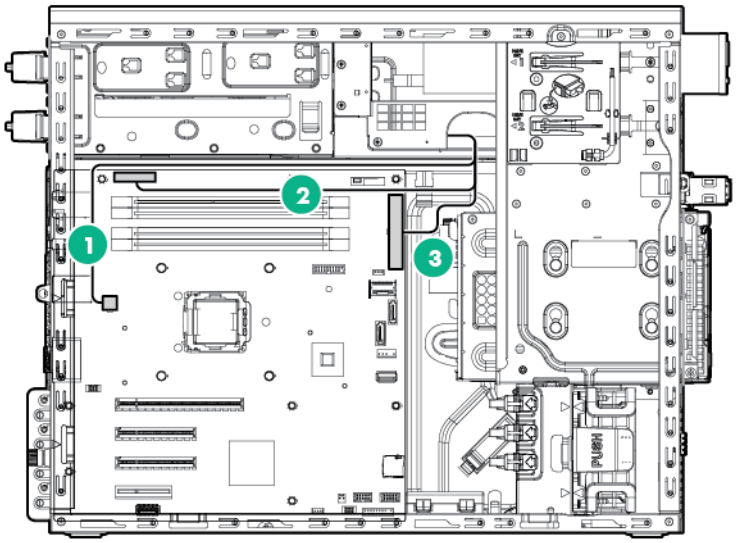

Item	Description
1	4-pin power supply cable (with the 8-pin to 4-pin adapter cable connected)
2	26-pin RPS cable
3	24-pin power supply cable

Capacitor pack cabling

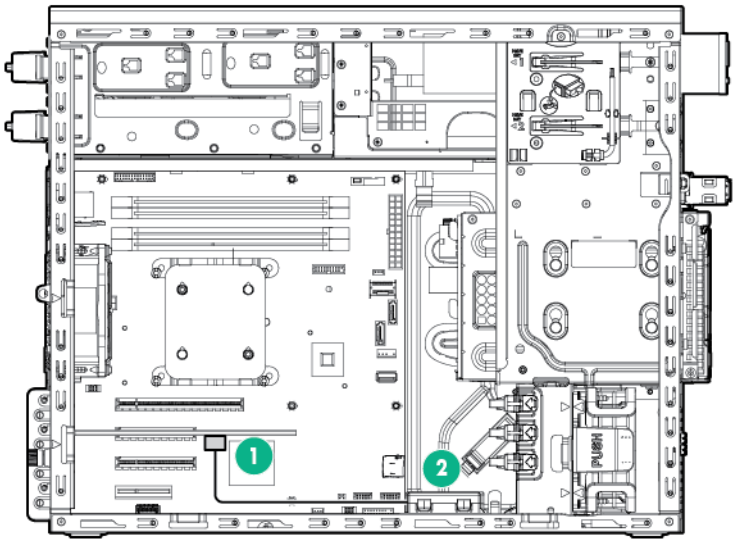

Item	Description
1	Cache module
2	FBWC capacitor pack

Software and configuration utilities

Server mode

The software and configuration utilities presented in this section operate in online mode, offline mode, or in both modes.

Software or configuration utility	Server mode
HPE iLO (on page 65)	Online and Offline
Active Health System (on page 66)	Online and Offline
Integrated Management Log (on page 67)	Online and Offline
Intelligent Provisioning (on page 67)	Offline
HPE Insight Diagnostics (on page 68)	Online and Offline
HPE Insight Remote Support software (on page 68)	Online
HPE Insight Online	Online
Erase Utility (on page 68)	Offline
Scripting Toolkit ("Scripting Toolkit for Windows and Linux" on page 69)	Online
Service Pack for ProLiant (on page 69)	Online and Offline
HP Smart Update Manager (on page 69)	Online and Offline
HPE ROM-Based Setup Utility (on page 70)	Offline
Array Configuration Utility (on page 71)	Online and Offline
Option ROM Configuration for Arrays (on page 72)	Offline
ROMPaq utility (on page 73)	Offline

Hewlett Packard Enterprise product QuickSpecs

For more information about product features, specifications, options, configurations, and compatibility, see the product QuickSpecs on the Hewlett Packard Enterprise website (http://www.hpe.com/info/qs).

HPE iLO Management

HPE iLO Management is a set of embedded management features supporting the complete lifecycle of the server, from initial deployment through ongoing management.

HPE iLO

The iLO subsystem is a standard component of ProLiant servers that simplifies initial server setup, server health monitoring, power and thermal optimization, and remote server administration. The iLO subsystem includes an intelligent microprocessor, secure memory, and a dedicated network interface. This design makes iLO independent of the host server and its operating system.

iLO enables and manages the Active Health System (on page 66) and also features Agentless Management. All key internal subsystems are monitored by iLO. If enabled, SNMP alerts are sent directly by iLO regardless of the host operating system or even if no host operating system is installed.

Embedded remote support software is available on ProLiant Gen8 and later servers with iLO 4, regardless of the operating system software and without installing OS agents on the server.

Using iLO, you can do the following:

- Access a high-performance and secure Integrated Remote Console to the server from anywhere in the world if you have a network connection to the server.
- Use the shared .NET Integrated Remote Console to collaborate with up to four server administrators.
- Remotely mount high-performance Virtual Media devices to the server.
- Securely and remotely control the power state of the managed server.
- Implement true Agentless Management with SNMP alerts from iLO, regardless of the state of the host server.
- Download the Active Health System log.
- Register for HPE Insight Remote Support.
- Use iLO Federation to manage multiple servers from one system running the iLO web interface.
- Use Virtual Power and Virtual Media from the GUI, the CLI, or the iLO scripting toolkit for many tasks, including the automation of deployment and provisioning.
- Control iLO by using a remote management tool.

For more information about iLO features, see the iLO documentation on the Hewlett Packard Enterprise website (http://www.hpe.com/info/ilo/docs).

Active Health System

The HPE Active Health System provides the following features:

- Combined diagnostics tools/scanners
- Always on, continuous monitoring for increased stability and shorter downtimes
- Rich configuration history
- Health and service alerts
- Easy export and upload to Service and Support

The Active Health System monitors and records changes in the server hardware and system configuration. The Active Health System assists in diagnosing problems and delivering rapid resolution if server failures occur.

The Active Health System collects the following types of data:

- Server model
- Serial number
- Processor model and speed
- Storage capacity and speed
- Memory capacity and speed
- Firmware/BIOS

Active Health System does not collect information about Active Health System users' operations, finances, customers, employees, partners, or data center, such as IP addresses, host names, user names, and passwords. Active Health System does not parse or change operating system data from third-party error event log activities, such as content created or passed through by the operating system.

The data that is collected is managed according to the Hewlett Packard Enterprise Data Privacy policy. For more information see the Hewlett Packard Enterprise website (http://www.hpe.com/info/privacy).

The Active Health System, in conjunction with the system monitoring provided by Agentless Management or SNMP Pass-thru, provides continuous monitoring of hardware and configuration changes, system status, and service alerts for various server components.

The Agentless Management Service is available in the SPP, which can be downloaded from the Hewlett Packard Enterprise website (http://www.hpe.com/servers/spp/download). The Active Health System log can be downloaded manually from iLO 4 or HPE Intelligent Provisioning and sent to Hewlett Packard Enterprise.

For more information, see the following documents:

- *iLO User Guide* on the Hewlett Packard Enterprise website (http://www.hpe.com/info/enterprise/docs)
- *Intelligent Provisioning User Guide* on the Hewlett Packard Enterprise website (http://www.hpe.com/info/enterprise/docs)

Integrated Management Log

The IML records hundreds of events and stores them in an easy-to-view form. The IML timestamps each event with 1-minute granularity.

You can view recorded events in the IML in several ways, including the following:

- From within HPE SIM
- From within operating system-specific IML viewers:
  - For Windows: IML Viewer
  - For Linux: IML Viewer Application
- From within the iLO web interface
- From within Insight Diagnostics ("HPE Insight Diagnostics" on page 68)

Intelligent Provisioning

Several packaging changes have taken place with ProLiant Gen8 servers: SmartStart CDs and the Smart Update Firmware DVD no longer ship with these new servers. Instead, the deployment capability is embedded in the server as part of Intelligent Provisioning.

Intelligent Provisioning is a single-server deployment tool embedded in ProLiant Gen8 and later servers that simplifies ProLiant server setup, providing a reliable and consistent way to deploy ProLiant server configurations:

- Intelligent Provisioning assists with the OS installation process by preparing the system for installing "off-the-shelf" and Hewlett Packard Enterprise branded versions of operating system software and integrating optimized ProLiant server support software.
- Intelligent Provisioning provides maintenance-related tasks using the Perform Maintenance window.
- Intelligent Provisioning provides installation help for Microsoft Windows, Red Hat and SUSE Linux, and VMware operating systems. For specific OS support, see the *Intelligent Provisioning Release Notes* on the Hewlett Packard Enterprise website (http://www.hpe.com/info/intelligentprovisioning/docs).

For more information about Intelligent Provisioning software, see the Hewlett Packard Enterprise website (http://www.hpe.com/info/intelligentprovisioning/docs). For Intelligent Provisioning recovery media downloads, see the Resources tab on the Hewlett Packard Enterprise website (http://www.hpe.com/info/ilo). For consolidated drive and firmware update packages, see the Smart Update: Server Firmware and Driver Updates page on the Hewlett Packard Enterprise website (http://www.hpe.com/info/SmartUpdate/docs).

HPE Insight Diagnostics

The Insight Diagnostics is a proactive server management tool, available in both offline and online versions, that provides diagnostics and troubleshooting capabilities to assist IT administrators who verify server installations, troubleshoot problems, and perform repair validation.

The Insight Diagnostics Offline Edition performs various in-depth system and component testing while the OS is not running. To run this utility, boot the server using Intelligent Provisioning (on page 67).

The Insight Diagnostics Online Edition is a web-based application that captures system configuration and other related data needed for effective server management. Available in Microsoft Windows and Linux versions, the utility helps to ensure proper system operation.

For more information or to download the utility, see the Hewlett Packard Enterprise website (http://www.hpe.com/servers/diags).The Insight Diagnostics Online Edition is also available in the SPP ("Service Pack for ProLiant" on page 69).

HPE Insight Diagnostics survey functionality

HPE Insight Diagnostics (on page 68) provides survey functionality that gathers critical hardware and software information on ProLiant servers.

This functionality supports operating systems that are supported by the server. For operating systems supported by the server, see the Hewlett Packard Enterprise website (http://www.hpe.com/info/supportos).

If a significant change occurs between data-gathering intervals, the survey function marks the previous information and overwrites the survey data files to reflect the latest changes in the configuration.

Survey functionality is installed with every Intelligent Provisioning-assisted Insight Diagnostics installation, or it can be installed through the SPP ("Service Pack for ProLiant" on page 69).

Erase Utility

△ **CAUTION:** Perform a backup before running the Erase Utility. The utility sets the system to its original factory state, deletes the current hardware configuration information, including array setup and disk partitioning, and erases all connected hard drives completely. Before using this utility, see the instructions in the *Intelligent Provisioning User Guide*.

Use the Erase Utility to erase drives and Active Health System logs, and to reset RBSU settings. Run the Erase Utility if you must erase the system for the following reasons:

- You want to install a new operating system on a server with an existing operating system.
- You encounter an error when completing the steps of a factory-installed operating system installation.

To access the Erase Utility, click the Perform Maintenance icon from the Intelligent Provisioning home screen, and then select **Erase**.

For more information about the Erase Utility, see the Intelligent Provisioning user guide on the Hewlett Packard Enterprise website (http://www.hpe.com/info/intelligentprovisioning/docs).

HPE Insight Remote Support software

Hewlett Packard Enterprise strongly recommends that you register your device for remote support to enable enhanced delivery of your Hewlett Packard Enterprise Warranty, HP Care Pack Service, or Hewlett Packard Enterprise contractual support agreement. HPE Insight Remote Support supplements your monitoring continuously to ensure maximum system availability by providing intelligent event diagnosis, and automatic, secure submission of hardware event notifications to Hewlett Packard Enterprise, which will initiate a fast and accurate resolution, based on your product's service level.

Notifications may be sent to your authorized Hewlett Packard Enterprise Channel Partner for onsite service, if configured and available in your country.

For more information, see the *Insight Remote Support and Insight Online Setup Guide for ProLiant Gen8 Servers and BladeSystem c-Class Enclosures* on the Hewlett Packard Enterprise website (http://www.hpe.com/info/enterprise/docs). Insight Remote Support is available as part of Hewlett Packard Enterprise Warranty, HP Care Pack Service, or Hewlett Packard Enterprise contractual support agreement.

Scripting Toolkit for Windows and Linux

The Scripting Toolkit for Windows and Linux is a server deployment product that delivers an unattended automated installation for high-volume server deployments. The Scripting Toolkit is designed to support ProLiant BL, ML, DL, and SL servers. The toolkit includes a modular set of utilities and important documentation that describes how to apply these tools to build an automated server deployment process.

The Scripting Toolkit provides a flexible way to create standard server configuration scripts. These scripts are used to automate many of the manual steps in the server configuration process. This automated server configuration process cuts time from each deployment, making it possible to scale rapid, high-volume server deployments.

For more information, and to download the Scripting Toolkit, see the Hewlett Packard Enterprise website (http://www.hpe.com/servers/proliant/stk).

Service Pack for ProLiant

The SPP is a comprehensive systems software (drivers and firmware) solution delivered as a single package with major server releases. This solution uses HP SUM as the deployment tool and is tested on all supported ProLiant servers including ProLiant Gen8 and later servers.

SPP can be used in an online mode on a Windows or Linux hosted operating system, or in an offline mode where the server is booted to an operating system included on the ISO file so that the server can be updated automatically with no user interaction or updated in interactive mode.

For more information or to download SPP, see one of the following pages on the Hewlett Packard Enterprise website:

- Service Pack for ProLiant download page (http://www.hpe.com/info/spp/docs)
- Smart Update: Server Firmware and Driver Updates page (http://www.hpe.com/info/SmartUpdate/docs)

HP Smart Update Manager

HP SUM is a product used to install and update firmware, drivers, and systems software on ProLiant servers. The HP SUM provides a GUI and a command-line scriptable interface for deployment of systems software for single or one-to-many ProLiant servers and network-based targets, such as iLOs, OAs, and VC Ethernet and Fibre Channel modules.

For more information about HP SUM, see the product page on the Hewlett Packard Enterprise website (http://www.hpe.com/info/hpsum).

To download HP SUM, see the Hewlett Packard Enterprise website (http://www.hpe.com/info/hpsum/download).

To access the *HP Smart Update Manager User Guide*, see the HP SUM Information Library (http://www.hpe.com/info/hpsum/documentation).

HPE ROM-Based Setup Utility

RBSU is a configuration utility embedded in HPE ProLiant servers that performs a wide range of configuration activities that can include the following:

- Configuring system devices and installed options
- Enabling and disabling system features
- Displaying system information
- Selecting the primary boot controller
- Configuring memory options
- Language selection

For more information on RBSU, see the *ROM-Based Setup Utility User Guide* on the Documentation CD or the RBSU Information Library (http://www.hpe.com/info/rbsu/docs).

Using RBSU

To use RBSU, use the following keys:

- To access RBSU, press the **F9** key during power-up when prompted.
- To navigate the menu system, use the arrow keys.
- To make selections, press the **Enter** key.
- To access Help for a highlighted configuration option, press the **F1** key.

IMPORTANT: RBSU automatically saves settings when you press the **Enter** key. The utility does not prompt you for confirmation of settings before you exit the utility. To change a selected setting, you must select a different setting and press the **Enter** key.

Default configuration settings are applied to the server at one of the following times:

- Upon the first system power-up
- After defaults have been restored

Default configuration settings are sufficient for proper typical server operation, but configuration settings can be modified using RBSU. The system will prompt you for access to RBSU with each power-up.

Auto-configuration process

The auto-configuration process automatically runs when you boot the server for the first time. During the power-up sequence, the system ROM automatically configures the entire system without needing any intervention. During this process, the ORCA utility, in most cases, automatically configures the array to a default setting based on the number of drives connected to the server.

NOTE: If the boot drive is not empty or has been written to in the past, ORCA does not automatically configure the array. You must run ORCA to configure the array settings.

NOTE: The server may not support all the following examples.

Drives installed	Drives used	RAID level
1	1	RAID 0
2	2	RAID 1

Drives installed	Drives used	RAID level
3, 4, 5, or 6	3, 4, 5, or 6	RAID 5
More than 6	0	None

To change any ORCA default settings and override the auto-configuration process, press the **F8** key when prompted.

For more information on RBSU, see the *ROM-Based Setup Utility User Guide* on the Documentation CD or the RBSU Information Library (http://www.hpe.com/info/rbsu/docs).

Boot options

Near the end of the boot process, the boot options screen is displayed. This screen is visible for several seconds before the system attempts to boot from a supported boot device. During this time, you can do the following:

- Access RBSU by pressing the **F9** key.
- Access Intelligent Provisioning Maintenance Menu by pressing the **F10** key.
- Access the boot menu by pressing the **F11** key.
- Force a PXE Network boot by pressing the **F12** key.

Re-entering the server serial number and product ID

After you replace the system board, you must re-enter the server serial number and the product ID.

1. During the server startup sequence, press the **F9** key to access RBSU.
2. Select the **Advanced Options** menu.
3. Select **Service Options**.
4. Select **Serial Number**. The following warning appears:

   ```
   Warning: The serial number should ONLY be modified by qualified service personnel. This value should always match the serial number located on the chassis.
   ```
5. Press the **Enter** key to clear the warning.
6. Enter the serial number and press the **Enter** key.
7. Select **Product ID**. The following warning appears:

   ```
   Warning: The Product ID should ONLY be modified by qualified service personnel. This value should always match the Product ID located on the chassis.
   ```
8. Enter the product ID and press the **Enter** key.
9. Press the **Esc** key to close the menu.
10. Press the **Esc** key to exit RBSU.
11. Press the **F10** key to confirm exiting RBSU. The server automatically reboots.

Utilities and features

Array Configuration Utility

ACU is a utility with the following features:

- Runs as a local application or remote service accessed through the HPE System Management Homepage

- Supports online array capacity expansion, logical drive extension, assignment of online spares, and RAID or stripe size migration
- Suggests the optimum configuration for an unconfigured system
- For supported controllers, provides access to licensed features, including:
  - Moving and deleting individual logical volumes
  - Advanced Capacity Expansion (SATA to SAS and SAS to SATA)
  - Offline Split Mirror
  - RAID 6 and RAID 60
  - RAID 1 (ADM) and RAID 10 (ADM)
  - HPE Drive Erase
  - Video-On-Demand Advanced Controller Settings
- Provides different operating modes, enabling faster configuration or greater control over the configuration options
- Remains available any time that the server is on
- Displays on-screen tips for individual steps of a configuration procedure
- Provides context-sensitive searchable help content
- Provides diagnostic and SmartSSD Wear Gauge functionality on the Diagnostics tab

ACU is now available as an embedded utility, starting with ProLiant Gen8 servers. To access ACU, use one of the following methods:

- If an optional controller is not installed, press **F10** during boot.
- If an optional controller is installed, when the system recognizes the controller during POST, press **F5**.

For optimum performance, the minimum display settings are 1024 × 768 resolution and 16-bit color. Servers running Microsoft® operating systems require one of the following supported browsers:

- Internet Explorer 6.0 or later
- Mozilla Firefox 2.0 or later

For Linux servers, see the README.TXT file for additional browser and support information.

For more information about the storage controller and its features, select the relevant controller user documentation on the Hewlett Packard Enterprise website (http://www.hpe.com/info/smartstorage/docs).

To configure arrays, see the *HPE Smart Storage Administrator User Guide* on the Hewlett Packard Enterprise website (http://www.hpe.com/info/smartstorage/docs).

Option ROM Configuration for Arrays

Before installing an operating system, you can use the ORCA utility to create the first logical drive, assign RAID levels, and establish online spare configurations.

The utility also provides support for the following functions:

- Reconfiguring one or more logical drives
- Viewing the current logical drive configuration
- Deleting a logical drive configuration
- Setting the controller to be the boot controller
- Selecting the boot volume

If you do not use the utility, ORCA will default to the standard configuration.

For more information regarding the default configurations that ORCA uses, see the *HPE ROM-Based Setup Utility User Guide* on the Documentation CD or the HPE RBSU Information Library (http://www.hpe.com/info/rbsu/docs).

For more information about the storage controller and its features, select the relevant controller user documentation on the Hewlett Packard Enterprise website (http://www.hpe.com/support/SAC_UG_ProLiantServers_en).

To configure arrays, see the user guide for Smart Array Controllers on the Hewlett Packard Enterprise website (http://www.hpe.com/support/CASAC_RG_en).

ROMPaq utility

The ROMPaq utility enables you to upgrade the system firmware (BIOS). To upgrade the firmware, insert a ROMPaq USB Key into an available USB port and boot the system. In addition to ROMPaq, Online Flash Components for Windows and Linux operating systems are available for updating the system firmware.

The ROMPaq utility checks the system and provides a choice (if more than one exists) of available firmware revisions.

To locate the drivers for a particular server, go to the Hewlett Packard Enterprise website (http://www.hpe.com/support/hpesc). Under **Select your HPE product**, enter the product name or number and click **Go**.

Automatic Server Recovery

ASR is a feature that causes the system to restart when a catastrophic operating system error occurs, such as a blue screen, ABEND (does not apply to HPE ProLiant DL980 Servers), or panic. A system fail-safe timer, the ASR timer, starts when the System Management driver, also known as the Health Driver, is loaded. When the operating system is functioning properly, the system periodically resets the timer. However, when the operating system fails, the timer expires and restarts the server.

ASR increases server availability by restarting the server within a specified time after a system hang. At the same time, the SIM console notifies you by sending a message to a designated pager number that ASR has restarted the system. You can disable ASR from the System Management Homepage or through RBSU.

USB support

Hewlett Packard Enterprise provides standard USB 2.0 support, standard USB 3.0 support, and legacy USB support. Standard support is provided by the OS through the appropriate USB device drivers.

Before the OS loads, Hewlett Packard Enterprise provides support for USB 2.0 devices through legacy USB support, which is enabled by default in the system ROM. USB 3.0 ports are not functional before the OS loads. The native OS provides USB 3.0 support through appropriate xHCI drivers.

Legacy USB support provides USB functionality in environments where USB support is not available normally. Specifically, Hewlett Packard Enterprise provides legacy USB functionality for the following:

- POST
- RBSU
- Diagnostics
- DOS
- Operating environments which do not provide native USB support

For Windows Server 2008 R2 SP1, you must download the USB 3.0 driver from the Hewlett Packard Enterprise website (http://www.hpe.com/info/hpesc).

Redundant ROM support

The server enables you to upgrade or configure the ROM safely with redundant ROM support. The server has a single ROM that acts as two separate ROM images. In the standard implementation, one side of the ROM contains the current ROM program version, while the other side of the ROM contains a backup version.

NOTE: The server ships with the same version programmed on each side of the ROM.

Safety and security benefits

When you flash the system ROM, ROMPaq writes over the backup ROM and saves the current ROM as a backup, enabling you to switch easily to the alternate ROM version if the new ROM becomes corrupted for any reason. This feature protects the existing ROM version, even if you experience a power failure while flashing the ROM.

Keeping the system current

Drivers

IMPORTANT: Always perform a backup before installing or updating device drivers.

The server includes new hardware that may not have driver support on all OS installation media.

If you are installing an Intelligent Provisioning-supported OS, use Intelligent Provisioning (on page 67) and its Configure and Install feature to install the OS and latest supported drivers.

If you do not use Intelligent Provisioning to install an OS, drivers for some of the new hardware are required. These drivers, as well as other option drivers, ROM images, and value-add software can be downloaded as part of an SPP.

If you are installing drivers from SPP, be sure that you are using the latest SPP version that your server supports. To verify that your server is using the latest supported version and for more information about SPP, see the Hewlett Packard Enterprise website (http://www.hpe.com/servers/spp/download).

To locate the drivers for a particular server, go to the Hewlett Packard Enterprise Support Center website (http://www.hpe.com/support/hpesc). Under **Select your HPE product**, enter the product name or number and click **Go**.

Software and firmware

Software and firmware should be updated before using the server for the first time, unless any installed software or components require an older version.

For system software and firmware updates, use one of the following sources:

- Download the SPP ("Service Pack for ProLiant" on page 69) from the Service Pack for ProLiant download page (http://www.hpe.com/info/spp/docs).
- Download individual drivers, firmware, or other systems software components from the server product page in the Hewlett Packard Enterprise Support Center website (http://www.hpe.com/support/hpesc).

Version control

The VCRM and VCA are web-enabled Insight Management Agents tools that SIM uses to schedule software update tasks to the entire enterprise.

- VCRM manages the repository for SPP. Administrators can view the SPP contents or configure VCRM to automatically update the repository with internet downloads of the latest software and firmware from Hewlett Packard Enterprise.
- VCA compares installed software versions on the node with updates available in the VCRM managed repository. Administrators configure VCA to point to a repository managed by VCRM.

For more information about version control tools, see the *Systems Insight Manager User Guide,* the *Version Control Agent User Guide*, and the *Version Control Repository Manager User Guide* on the Hewlett Packard Enterprise website (http://www.hpe.com/info/enterprise/docs).

1. Select **HP Insight Management** from the available options in Products and Solutions.
2. Select **HP Version Control** from the available options in Insight Management.
3. Download the latest document.

Operating systems and virtualization software support for ProLiant servers

For information about specific versions of a supported operating system, see the Hewlett Packard Enterprise website (http://www.hpe.com/info/ossupport).

HPE Technology Service Portfolio

HPE Technology Services offers a targeted set of consultancy, deployment, and service solutions to meet the support needs of most business and IT environments.

Foundation Care services—Delivers scalable hardware and software support packages for ProLiant server and industry-standard software. You can choose the type and level of service that is most suitable for your business needs.

HPE Collaborative Support—With a single call, Hewlett Packard Enterprise addresses initial hardware and software support needs and helps to quickly identify if a problem is related to hardware or software. If the problem is related to hardware, Hewlett Packard Enterprise resolves the problem according to service level commitments. If the reported incident is related to a Hewlett Packard Enterprise software product or a supported third-party software product and cannot be resolved by applying known fixes, Hewlett Packard Enterprise contacts the third-party vendor and creates a problem incident on your behalf.

HPE Proactive Care—For customers running business critical environments where downtime is not an option, HPE Proactive Care helps to deliver high levels of availability. Key to these service options is the delivery of proactive service management tools to help you avoid the causes of downtime. If a problem arises, then Hewlett Packard Enterprise offers advanced technical response from critical system support specialists for problem identification and resolution.

Hewlett Packard Enterprise Support Center—For all service options, the Hewlett Packard Enterprise Support Center delivers the information, tools, and experts required to support Hewlett Packard Enterprise business products.

HPE Insight Remote Support—Provides 24x7 secure remote monitoring, diagnosis, and problem resolution.

For more information, see one of the following websites:

- ProLiant Server Services website (http://www.hpe.com/services/proliant)
- BladeSystem Services website (http://www.hpe.com/services/bladesystem)

Change control and proactive notification

Hewlett Packard Enterprise offers Change Control and Proactive Notification to notify customers 30 to 60 days in advance of upcoming hardware and software changes on Hewlett Packard Enterprise commercial products.

For more information, refer to the Hewlett Packard Enterprise website (http://www.hpe.com/info/pcn).

Troubleshooting

Troubleshooting resources

The *ProLiant Gen8 Troubleshooting Guide, Volume I: Troubleshooting* provides procedures for resolving common problems and comprehensive courses of action for fault isolation and identification, issue resolution, and software maintenance on ProLiant servers and server blades. To view the guide, select a language:

- English (http://www.hpe.com/support/Gen9_TSG_en)
- French (http://www.hpe.com/support/Gen9_TSG_fr)
- Spanish (http://www.hpe.com/support/Gen9_TSG_es)
- German (http://www.hpe.com/support/Gen9_TSG_de)
- Japanese (http://www.hpe.com/support/Gen9_TSG_ja)
- Simplified Chinese (http://www.hpe.com/support/Gen9_TSG_zh_cn)

The *ProLiant Gen8 Troubleshooting Guide, Volume II: Error Messages* provides a list of error messages and information to assist with interpreting and resolving error messages on ProLiant servers and server blades. To view the guide, select a language:

- English (http://www.hpe.com/support/Gen9_EMG_en)
- French (http://www.hpe.com/support/Gen9_EMG_fr)
- Spanish (http://www.hpe.com/support/Gen9_EMG_es)
- German (http://www.hpe.com/support/Gen9_EMG_de)
- Japanese (http://www.hpe.com/support/Gen9_EMG_ja)
- Simplified Chinese (http://www.hpe.com/support/Gen9_EMG_zh_cn)

System battery replacement

If the server no longer automatically displays the correct date and time, then replace the battery that provides power to the real-time clock. Under normal use, battery life is 5 to 10 years.

WARNING: The computer contains an internal lithium manganese dioxide, a vanadium pentoxide, or an alkaline battery pack. A risk of fire and burns exists if the battery pack is not properly handled. To reduce the risk of personal injury:

- Do not attempt to recharge the battery.
- Do not expose the battery to temperatures higher than 60°C (140°F).
- Do not disassemble, crush, puncture, short external contacts, or dispose of in fire or water.
- Replace only with the spare designated for this product.

To remove the component:

1. Power down the server (on page 16).
2. Remove all power:
   a. Disconnect each power cord from the power source.
   b. Disconnect each power cord from the server.
3. Unlock the tower bezel (on page 17).
4. Remove the access panel (on page 18).
5. Locate the battery on the system board ("System board components" on page 10).
6. Remove the battery.

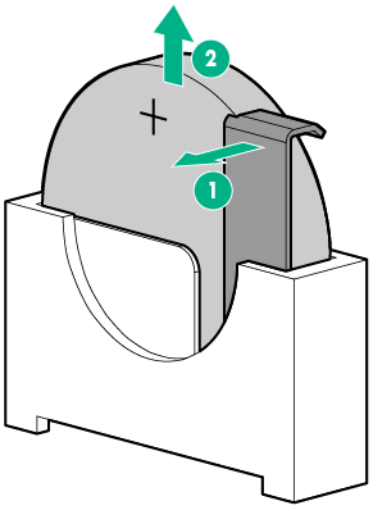

IMPORTANT: Replacing the system board battery resets the system ROM to its default configuration. After replacing the battery, reconfigure the system through RBSU.

To replace the component, reverse the removal procedure.

For more information about battery replacement or proper disposal, contact an authorized reseller or an authorized service provider.

Warranty and regulatory information

Warranty information

HPE ProLiant and x86 Servers and Options (http://www.hpe.com/support/ProLiantServers-Warranties)

HPE Enterprise Servers (http://www.hpe.com/support/EnterpriseServers-Warranties)

HPE Storage Products (http://www.hpe.com/support/Storage-Warranties)

HPE Networking Products (http://www.hpe.com/support/Networking-Warranties)

Regulatory information

Safety and regulatory compliance

For important safety, environmental, and regulatory information, see *Safety and Compliance Information for Server, Storage, Power, Networking, and Rack Products*, available at the Hewlett Packard Enterprise website (http://www.hpe.com/support/Safety-Compliance-EnterpriseProducts).

Belarus Kazakhstan Russia marking



Manufacturer and Local Representative Information

Manufacturer information:

Hewlett Packard Enterprise Company, 3000 Hanover Street, Palo Alto, CA 94304 U.S.

Local representative information Russian:

- **Russia:**

  ООО «Хьюлетт Паккард Энтерпрайз», Российская Федерация, 125171, г. Москва, Ленинградское шоссе, 16А, стр.3, Телефон/факс: +7 495 797 35 00

- **Belarus:**

  ИООО «Хьюлетт-Паккард Бел», Республика Беларусь, 220030, г. Минск, ул. Интернациональная, 36-1, Телефон/факс: +375 17 392 28 20

- **Kazakhstan:**

  ТОО «Хьюлетт-Паккард (К)», Республика Казахстан, 050040, г. Алматы, Бостандыкский район, проспект Аль-Фараби, 77/7, Телефон/факс: + 7 727 355 35 52

Local representative information Kazakh:

- **Russia:**

  ЖШС "Хьюлетт Паккард Энтерпрайз", Ресей Федерациясы, 125171,
  Мәскеу, Ленинград тас жолы, 16А блок 3, Телефон/факс: +7 495 797 35 00

- **Belarus:**

  «HEWLETT-PACKARD Bel» ЖШС, Беларусь Республикасы, 220030, Минск қ.,
  Интернациональная көшесі, 36/1, Телефон/факс: +375 17 392 28 20

- **Kazakhstan:**

  ЖШС «Хьюлетт-Паккард (К)», Қазақстан Республикасы, 050040, Алматы к.,
  Бостандық ауданы, Әл-Фараби даңғ ылы, 77/7, Телефон/факс: +7 727 355 35 52

Manufacturing date:

The manufacturing date is defined by the serial number.

CCSYWWZZZZ (serial number format for this product)

Valid date formats include:

- YWW, where Y indicates the year counting from within each new decade, with 2000 as the starting point; for example, 238: 2 for 2002 and 38 for the week of September 9. In addition, 2010 is indicated by 0, 2011 by 1, 2012 by 2, 2013 by 3, and so forth.
- YYWW, where YY indicates the year, using a base year of 2000; for example, 0238: 02 for 2002 and 38 for the week of September 9.

Turkey RoHS material content declaration

Türkiye Cumhuriyeti: EEE Yönetmeliğine Uygundur

Ukraine RoHS material content declaration

Обладнання відповідає вимогам Технічного регламенту щодо обмеження використання деяких небезпечних речовин в електричному та електронному обладнанні, затвердженого постановою Кабінету Міністрів України від 3 грудня 2008 № 1057

Electrostatic discharge

Preventing electrostatic discharge

To prevent damaging the system, be aware of the precautions you need to follow when setting up the system or handling parts. A discharge of static electricity from a finger or other conductor may damage system boards or other static-sensitive devices. This type of damage may reduce the life expectancy of the device.

To prevent electrostatic damage:

- Avoid hand contact by transporting and storing products in static-safe containers.
- Keep electrostatic-sensitive parts in their containers until they arrive at static-free workstations.
- Place parts on a grounded surface before removing them from their containers.
- Avoid touching pins, leads, or circuitry.
- Always be properly grounded when touching a static-sensitive component or assembly.

Grounding methods to prevent electrostatic discharge

Several methods are used for grounding. Use one or more of the following methods when handling or installing electrostatic-sensitive parts:

- Use a wrist strap connected by a ground cord to a grounded workstation or computer chassis. Wrist straps are flexible straps with a minimum of 1 megohm ±10 percent resistance in the ground cords. To provide proper ground, wear the strap snug against the skin.
- Use heel straps, toe straps, or boot straps at standing workstations. Wear the straps on both feet when standing on conductive floors or dissipating floor mats.
- Use conductive field service tools.
- Use a portable field service kit with a folding static-dissipating work mat.

If you do not have any of the suggested equipment for proper grounding, have an authorized reseller install the part.

For more information on static electricity or assistance with product installation, contact an authorized reseller.

Specifications

Environmental specifications

Specification	Value
Temperature range*	
Operating	10°C to 35°C (50°F to 95°F)
Non-operating	-30°C to 60°C (-22°F to 140°F)
Relative humidity (non-condensing)	
Operating, maximum wet bulb temperature of 28°C (82.4°F)	10% to 90%
Non-operating, maximum wet bulb temperature of 38.7°C (101.7°F)	5% to 95%

* All temperature ratings shown are for sea level. An altitude derating of 1°C per 304.8 m (1.8°F per 1,000 ft) to 3048 m (10,000 ft) is applicable. No direct sunlight allowed.

Server specifications

Specification	Tower model	Rack model
Height	36.82 cm (14.50 in)	17.50 cm (6.89 in)
Depth	47.52 cm (18.71 in)	47.52 cm (18.71 in)
Width	17.50 cm (6.89 in)	36.82 cm (14.50 in)
Weight, minimum for SFF drive cage	11.00 kg (24.22 lb)	11.00 kg (24.22 lb)
Weight, maximum for SFF drive cage	17.00 kg (37.44 lb)	17.00 kg (37.44 lb)
Weight, minimum for LFF drive cage	11.90 kg (26.21 lb)	11.90 kg (26.21 lb)
Weight, maximum for LFF drive cage	19.00 kg (41.85 lb)	19.00 kg (41.85 lb)

Power supply specifications

The server is configured with one of the following power supplies:

- HPE 350 W 4U Integrated Power Supply
- HPE 460 W CS Gold Hot-plug Power Supply (92% efficiency)

△ **CAUTION:** Check the system and power supply input ratings before powering up the server.

HPE 350 W 4U Integrated Power Supply

Specification	Value
Input requirements	—
Rated input voltage	100 V AC to 240 V AC

Rated input frequency	47 Hz to 63 Hz
Rated input current	6 A
Rated input power	440 W at 100 V AC input 440 W at 200 V AC input
Efficiency	No less than 82% at 100% load No less than 85% at 50% load No less than 82% at 20% load
Power supply output	—
Rated steady-state power	350 W at 100 V AC input 350 W at 200 V AC input
Maximum peak power	400 W at 100 V AC input 400 W at 200 V AC input
Rated output power	350 W

HPE 460 W CS Gold Hot-plug Power Supply

Specification	Value
Input requirements	—
Rated input voltage	100 V AC to 240 V AC
Rated input frequency	50 Hz to 60 Hz
Rated input current	6 A to 3 A
Rated input power	526 W at 115 V AC input 523 W at 230 V AC input
Efficiency	No less than 87.5% at 100% load No less than 89.5% at 50% load No less than 87.5% at 20% load
Power supply output	—
Rated steady-state power	460 W at 100 V to 120 V AC input 460 W at 200 V to 240 V AC input
Maximum peak power	460 W at 100 V to 120 V AC input 460 W at 200 V to 240 V AC input
Rated output power	460 W

Hot-plug power supply calculations

For hot-plug power supply specifications and calculators to determine electrical and heat loading for the server, see the Hewlett Packard Enterprise Power Advisor website (http://www.hpe.com/info/poweradvisor/online).

Support and other resources

Accessing Hewlett Packard Enterprise Support

- For live assistance, go to the Contact Hewlett Packard Enterprise Worldwide website (http://www.hpe.com/assistance).
- To access documentation and support services, go to the Hewlett Packard Enterprise Support Center website (http://www.hpe.com/support/hpesc).

Information to collect

- Technical support registration number (if applicable)
- Product name, model or version, and serial number
- Operating system name and version
- Firmware version
- Error messages
- Product-specific reports and logs
- Add-on products or components
- Third-party products or components

Accessing updates

- Some software products provide a mechanism for accessing software updates through the product interface. Review your product documentation to identify the recommended software update method.
- To download product updates, go to either of the following:
  - Hewlett Packard Enterprise Support Center **Get connected with updates** page (http://www.hpe.com/support/e-updates)
  - Software Depot website (http://www.hpe.com/support/softwaredepot)
- To view and update your entitlements, and to link your contracts and warranties with your profile, go to the Hewlett Packard Enterprise Support Center **More Information on Access to Support Materials** page (http://www.hpe.com/support/AccessToSupportMaterials).



IMPORTANT: Access to some updates might require product entitlement when accessed through the Hewlett Packard Enterprise Support Center. You must have an HP Passport set up with relevant entitlements.

Websites

- Hewlett Packard Enterprise Information Library (http://www.hpe.com/info/enterprise/docs)
- Hewlett Packard Enterprise Support Center (http://www.hpe.com/support/hpesc)
- Contact Hewlett Packard Enterprise Worldwide (http://www.hpe.com/assistance)

- Subscription Service/Support Alerts (http://www.hpe.com/support/e-updates)
- Software Depot (http://www.hpe.com/support/softwaredepot)
- Customer Self Repair (http://www.hpe.com/support/selfrepair)
- Insight Remote Support (http://www.hpe.com/info/insightremotesupport/docs)
- Serviceguard Solutions for HP-UX (http://www.hpe.com/info/hpux-serviceguard-docs)
- Single Point of Connectivity Knowledge (SPOCK) Storage compatibility matrix (http://www.hpe.com/storage/spock)
- Storage white papers and analyst reports (http://www.hpe.com/storage/whitepapers)

Customer Self Repair

Hewlett Packard Enterprise products are designed with many Customer Self Repair (CSR) parts to minimize repair time and allow for greater flexibility in performing defective parts replacement. If during the diagnosis period Hewlett Packard Enterprise (or Hewlett Packard Enterprise service providers or service partners) identifies that the repair can be accomplished by the use of a CSR part, Hewlett Packard Enterprise will ship that part directly to you for replacement. There are two categories of CSR parts:

- **Mandatory**—Parts for which customer self repair is mandatory. If you request Hewlett Packard Enterprise to replace these parts, you will be charged for the travel and labor costs of this service.
- **Optional**—Parts for which customer self repair is optional. These parts are also designed for customer self repair. If, however, you require that Hewlett Packard Enterprise replace them for you, there may or may not be additional charges, depending on the type of warranty service designated for your product.

NOTE: Some Hewlett Packard Enterprise parts are not designed for customer self repair. In order to satisfy the customer warranty, Hewlett Packard Enterprise requires that an authorized service provider replace the part. These parts are identified as "No" in the Illustrated Parts Catalog.

Based on availability and where geography permits, CSR parts will be shipped for next business day delivery. Same day or four-hour delivery may be offered at an additional charge where geography permits. If assistance is required, you can call the Hewlett Packard Enterprise Support Center and a technician will help you over the telephone. Hewlett Packard Enterprise specifies in the materials shipped with a replacement CSR part whether a defective part must be returned to Hewlett Packard Enterprise. In cases where it is required to return the defective part to Hewlett Packard Enterprise, you must ship the defective part back to Hewlett Packard Enterprise within a defined period of time, normally five (5) business days. The defective part must be returned with the associated documentation in the provided shipping material. Failure to return the defective part may result in Hewlett Packard Enterprise billing you for the replacement. With a customer self repair, Hewlett Packard Enterprise will pay all shipping and part return costs and determine the courier/carrier to be used.

For more information about the Hewlett Packard Enterprise CSR program, contact your local service provider. For the North American program, go to the Hewlett Packard Enterprise CSR website (http://www.hpe.com/support/selfrepair).

Réparation par le client (CSR)

Les produits Hewlett Packard Enterprise comportent de nombreuses pièces CSR (Customer Self Repair = réparation par le client) afin de minimiser les délais de réparation et faciliter le remplacement des pièces défectueuses. Si pendant la période de diagnostic, Hewlett Packard Enterprise (ou ses partenaires ou mainteneurs agréés) détermine que la réparation peut être effectuée à l'aide d'une pièce CSR, Hewlett Packard Enterprise vous l'envoie directement. Il existe deux catégories de pièces CSR :

- **Obligatoire—**Pièces pour lesquelles la réparation par le client est obligatoire. Si vous demandez à Hewlett Packard Enterprise de remplacer ces pièces, les coûts de déplacement et main d'œuvre du service vous seront facturés.
- **Facultatif**—Pièces pour lesquelles la réparation par le client est facultative. Ces pièces sont également conçues pour permettre au client d'effectuer lui-même la réparation. Toutefois, si vous demandez à Hewlett Packard Enterprise de remplacer ces pièces, l'intervention peut ou non vous être facturée, selon le type de garantie applicable à votre produit.

REMARQUE: Certaines pièces Hewlett Packard Enterprise ne sont pas conçues pour permettre au client d'effectuer lui-même la réparation. Pour que la garantie puisse s'appliquer, Hewlett Packard Enterprise exige que le remplacement de la pièce soit effectué par un Mainteneur Agréé. Ces pièces sont identifiées par la mention "Non" dans le Catalogue illustré.

Les pièces CSR sont livrées le jour ouvré suivant, dans la limite des stocks disponibles et selon votre situation géographique. Si votre situation géographique le permet et que vous demandez une livraison le jour même ou dans les 4 heures, celle-ci vous sera facturée. Pour toute assistance, appelez le Centre d'assistance Hewlett Packard Enterprise pour qu'un technicien vous aide au téléphone. Dans les documents envoyés avec la pièce de rechange CSR, Hewlett Packard Enterprise précise s'il est nécessaire de lui retourner la pièce défectueuse. Si c'est le cas, vous devez le faire dans le délai indiqué, généralement cinq (5) jours ouvrés. La pièce et sa documentation doivent être retournées dans l'emballage fourni. Si vous ne retournez pas la pièce défectueuse, Hewlett Packard Enterprise se réserve le droit de vous facturer les coûts de remplacement. Dans le cas d'une pièce CSR, Hewlett Packard Enterprise supporte l'ensemble des frais d'expédition et de retour, et détermine la société de courses ou le transporteur à utiliser.

Pour plus d'informations sur le programme CSR de Hewlett Packard Enterprise, contactez votre Mainteneur Agrée local. Pour plus d'informations sur ce programme en Amérique du Nord, consultez le site Web Hewlett Packard Enterprise (http://www.hpe.com/support/selfrepair).

Riparazione da parte del cliente

Per abbreviare i tempi di riparazione e garantire una maggiore flessibilità nella sostituzione di parti difettose, i prodotti Hewlett Packard Enterprise sono realizzati con numerosi componenti che possono essere riparati direttamente dal cliente (CSR, Customer Self Repair). Se in fase di diagnostica Hewlett Packard Enterprise (o un centro di servizi o di assistenza Hewlett Packard Enterprise) identifica il guasto come riparabile mediante un ricambio CSR, Hewlett Packard Enterprise lo spedirà direttamente al cliente per la sostituzione. Vi sono due categorie di parti CSR:

- **Obbligatorie—**Parti che devono essere necessariamente riparate dal cliente. Se il cliente ne affida la riparazione ad Hewlett Packard Enterprise, deve sostenere le spese di spedizione e di manodopera per il servizio.
- **Opzionali—**Parti la cui riparazione da parte del cliente è facoltativa. Si tratta comunque di componenti progettati per questo scopo. Se tuttavia il cliente ne richiede la sostituzione ad Hewlett Packard Enterprise, potrebbe dover sostenere spese addizionali a seconda del tipo di garanzia previsto per il prodotto.

NOTA: alcuni componenti Hewlett Packard Enterprise non sono progettati per la riparazione da parte del cliente. Per rispettare la garanzia, Hewlett Packard Enterprise richiede che queste parti siano sostituite da un centro di assistenza autorizzato. Tali parti sono identificate da un "No" nel Catalogo illustrato dei componenti.

In base alla disponibilità e alla località geografica, le parti CSR vengono spedite con consegna entro il giorno lavorativo seguente. La consegna nel giorno stesso o entro quattro ore è offerta con un supplemento di costo solo in alcune zone. In caso di necessità si può richiedere l'assistenza telefonica di un addetto del centro di supporto tecnico Hewlett Packard Enterprise. Nel materiale fornito con una parte di ricambio CSR, Hewlett Packard Enterprise specifica se il cliente deve restituire dei component. Qualora sia richiesta la resa ad Hewlett Packard Enterprise del componente difettoso, lo si deve spedire ad Hewlett Packard Enterprise entro un determinato periodo di tempo, generalmente cinque (5) giorni lavorativi. Il componente difettoso deve essere restituito con la documentazione associata nell'imballo di

spedizione fornito. La mancata restituzione del componente può comportare la fatturazione del ricambio da parte di Hewlett Packard Enterprise. Nel caso di riparazione da parte del cliente, Hewlett Packard Enterprise sostiene tutte le spese di spedizione e resa e sceglie il corriere/vettore da utilizzare.

Per ulteriori informazioni sul programma CSR di Hewlett Packard Enterprise, contattare il centro di assistenza di zona. Per il programma in Nord America fare riferimento al sito Web (http://www.hpe.com/support/selfrepair).

Customer Self Repair

Hewlett Packard Enterprise Produkte enthalten viele CSR-Teile (Customer Self Repair), um Reparaturzeiten zu minimieren und höhere Flexibilität beim Austausch defekter Bauteile zu ermöglichen. Wenn Hewlett Packard Enterprise (oder ein Hewlett Packard Enterprise Servicepartner) bei der Diagnose feststellt, dass das Produkt mithilfe eines CSR-Teils repariert werden kann, sendet Ihnen Hewlett Packard Enterprise dieses Bauteil zum Austausch direkt zu. CSR-Teile werden in zwei Kategorien unterteilt:

- **Zwingend—**Teile, für die das Customer Self Repair-Verfahren zwingend vorgegeben ist. Wenn Sie den Austausch dieser Teile von Hewlett Packard Enterprise vornehmen lassen, werden Ihnen die Anfahrt- und Arbeitskosten für diesen Service berechnet.
- **Optional—**Teile, für die das Customer Self Repair-Verfahren optional ist. Diese Teile sind auch für Customer Self Repair ausgelegt. Wenn Sie jedoch den Austausch dieser Teile von Hewlett Packard Enterprise vornehmen lassen möchten, können bei diesem Service je nach den für Ihr Produkt vorgesehenen Garantiebedingungen zusätzliche Kosten anfallen.

HINWEIS: Einige Hewlett Packard Enterprise Teile sind nicht für Customer Self Repair ausgelegt. Um den Garantieanspruch des Kunden zu erfüllen, muss das Teil von einem Hewlett Packard Enterprise Servicepartner ersetzt werden. Im illustrierten Teilekatalog sind diese Teile mit „No“ bzw. „Nein“ gekennzeichnet.

CSR-Teile werden abhängig von der Verfügbarkeit und vom Lieferziel am folgenden Geschäftstag geliefert. Für bestimmte Standorte ist eine Lieferung am selben Tag oder innerhalb von vier Stunden gegen einen Aufpreis verfügbar. Wenn Sie Hilfe benötigen, können Sie das Hewlett Packard Enterprise Support Center anrufen und sich von einem Mitarbeiter per Telefon helfen lassen. Den Materialien von Hewlett Packard Enterprise, die mit einem CSR-Ersatzteil geliefert werden, können Sie entnehmen, ob das defekte Teil an Hewlett Packard Enterprise zurückgeschickt werden muss. Wenn es erforderlich ist, das defekte Teil an Hewlett Packard Enterprise zurückzuschicken, müssen Sie dies innerhalb eines vorgegebenen Zeitraums tun, in der Regel innerhalb von fünf (5) Geschäftstagen. Das defekte Teil muss mit der zugehörigen Dokumentation in der Verpackung zurückgeschickt werden, die im Lieferumfang enthalten ist. Wenn Sie das defekte Teil nicht zurückschicken, kann Hewlett Packard Enterprise Ihnen das Ersatzteil in Rechnung stellen. Im Falle von Customer Self Repair kommt Hewlett Packard Enterprise für alle Kosten für die Lieferung und Rücksendung auf und bestimmt den Kurier-/Frachtdienst.

Weitere Informationen über das Hewlett Packard Enterprise Customer Self Repair Programm erhalten Sie von Ihrem Servicepartner vor Ort. Informationen über das CSR-Programm in Nordamerika finden Sie auf der Hewlett Packard Enterprise Website unter (http://www.hpe.com/support/selfrepair).

Reparaciones del propio cliente

Los productos de Hewlett Packard Enterprise incluyen muchos componentes que el propio usuario puede reemplazar (Customer Self Repair, CSR) para minimizar el tiempo de reparación y ofrecer una mayor flexibilidad a la hora de realizar sustituciones de componentes defectuosos. Si, durante la fase de diagnóstico, Hewlett Packard Enterprise (o los proveedores o socios de servicio de Hewlett Packard Enterprise) identifica que una reparación puede llevarse a cabo mediante el uso de un componente CSR, Hewlett Packard Enterprise le enviará dicho componente directamente para que realice su sustitución. Los componentes CSR se clasifican en dos categorías:

- **Obligatorio—**componentes cuya reparación por parte del usuario es obligatoria. Si solicita a Hewlett Packard Enterprise que realice la sustitución de estos componentes, tendrá que hacerse cargo de los gastos de desplazamiento y de mano de obra de dicho servicio.
- **Opcional—**componentes cuya reparación por parte del usuario es opcional. Estos componentes también están diseñados para que puedan ser reparados por el usuario. Sin embargo, si precisa que Hewlett Packard Enterprise realice su sustitución, puede o no conllevar costes adicionales, dependiendo del tipo de servicio de garantía correspondiente al producto.

NOTA: Algunos componentes de Hewlett Packard Enterprise no están diseñados para que puedan ser reparados por el usuario. Para que el usuario haga valer su garantía, Hewlett Packard Enterprise pone como condición que un proveedor de servicios autorizado realice la sustitución de estos componentes. Dichos componentes se identifican con la palabra "No" en el catálogo ilustrado de componentes.

Según la disponibilidad y la situación geográfica, los componentes CSR se enviarán para que lleguen a su destino al siguiente día laborable. Si la situación geográfica lo permite, se puede solicitar la entrega en el mismo día o en cuatro horas con un coste adicional. Si precisa asistencia técnica, puede llamar al Centro de asistencia técnica de Hewlett Packard Enterprise y recibirá ayuda telefónica por parte de un técnico. Con el envío de materiales para la sustitución de componentes CSR, Hewlett Packard Enterprise especificará si los componentes defectuosos deberán devolverse a Hewlett Packard Enterprise. En aquellos casos en los que sea necesario devolver algún componente a Hewlett Packard Enterprise, deberá hacerlo en el periodo de tiempo especificado, normalmente cinco días laborables. Los componentes defectuosos deberán devolverse con toda la documentación relacionada y con el embalaje de envío. Si no enviara el componente defectuoso requerido, Hewlett Packard Enterprise podrá cobrarle por el de sustitución. En el caso de todas sustituciones que lleve a cabo el cliente, Hewlett Packard Enterprise se hará cargo de todos los gastos de envío y devolución de componentes y escogerá la empresa de transporte que se utilice para dicho servicio.

Para obtener más información acerca del programa de Reparaciones del propio cliente de Hewlett Packard Enterprise, póngase en contacto con su proveedor de servicios local. Si está interesado en el programa para Norteamérica, visite la página web de Hewlett Packard Enterprise CSR (http://www.hpe.com/support/selfrepair).

Customer Self Repair

Veel onderdelen in Hewlett Packard Enterprise producten zijn door de klant zelf te repareren, waardoor de reparatieduur tot een minimum beperkt kan blijven en de flexibiliteit in het vervangen van defecte onderdelen groter is. Deze onderdelen worden CSR-onderdelen (Customer Self Repair) genoemd. Als Hewlett Packard Enterprise (of een Hewlett Packard Enterprise Service Partner) bij de diagnose vaststelt dat de reparatie kan worden uitgevoerd met een CSR-onderdeel, verzendt Hewlett Packard Enterprise dat onderdeel rechtstreeks naar u, zodat u het defecte onderdeel daarmee kunt vervangen. Er zijn twee categorieën CSR-onderdelen:

- **Verplicht—**Onderdelen waarvoor reparatie door de klant verplicht is. Als u Hewlett Packard Enterprise verzoekt deze onderdelen voor u te vervangen, worden u voor deze service reiskosten en arbeidsloon in rekening gebracht.
- **Optioneel—**Onderdelen waarvoor reparatie door de klant optioneel is. Ook deze onderdelen zijn ontworpen voor reparatie door de klant. Als u echter Hewlett Packard Enterprise verzoekt deze onderdelen voor u te vervangen, kunnen daarvoor extra kosten in rekening worden gebracht, afhankelijk van het type garantieservice voor het product.

OPMERKING: Sommige Hewlett Packard Enterprise onderdelen zijn niet ontwikkeld voor reparatie door de klant. In verband met de garantievoorwaarden moet het onderdeel door een geautoriseerde Service Partner worden vervangen. Deze onderdelen worden in de geïllustreerde onderdelencatalogus aangemerkt met "Nee".

Afhankelijk van de leverbaarheid en de locatie worden CSR-onderdelen verzonden voor levering op de eerstvolgende werkdag. Levering op dezelfde dag of binnen vier uur kan tegen meerkosten worden aangeboden, indien dit mogelijk is gezien de locatie. Indien assistentie is gewenst, belt u het Hewlett Packard Enterprise Support Center om via de telefoon ondersteuning van een technicus te ontvangen.

Hewlett Packard Enterprise vermeldt in de documentatie bij het vervangende CSR-onderdeel of het defecte onderdeel aan Hewlett Packard Enterprise moet worden geretourneerd. Als het defecte onderdeel aan Hewlett Packard Enterprise moet worden teruggezonden, moet u het defecte onderdeel binnen een bepaalde periode, gewoonlijk vijf (5) werkdagen, retourneren aan Hewlett Packard Enterprise. Het defecte onderdeel moet met de bijbehorende documentatie worden geretourneerd in het meegeleverde verpakkingsmateriaal. Als u het defecte onderdeel niet terugzendt, kan Hewlett Packard Enterprise u voor het vervangende onderdeel kosten in rekening brengen. Bij reparatie door de klant betaalt Hewlett Packard Enterprise alle verzendkosten voor het vervangende en geretourneerde onderdeel en kiest Hewlett Packard Enterprise zelf welke koerier/transportonderneming hiervoor wordt gebruikt.

Neem contact op met een Service Partner voor meer informatie over het Customer Self Repair programma van Hewlett Packard Enterprise. Informatie over Service Partners vindt u op de Hewlett Packard Enterprise website (http://www.hpe.com/support/selfrepair).

Reparo feito pelo cliente

Os produtos da Hewlett Packard Enterprise são projetados com muitas peças para reparo feito pelo cliente (CSR) de modo a minimizar o tempo de reparo e permitir maior flexibilidade na substituição de peças com defeito. Se, durante o período de diagnóstico, a Hewlett Packard Enterprise (ou fornecedores/parceiros da Hewlett Packard Enterprise) concluir que o reparo pode ser efetuado pelo uso de uma peça CSR, a Hewlett Packard Enterprise enviará a peça diretamente ao cliente. Há duas categorias de peças CSR:

- **Obrigatória**—Peças cujo reparo feito pelo cliente é obrigatório. Se desejar que a Hewlett Packard Enterprise substitua essas peças, serão cobradas as despesas de transporte e mão-de-obra do serviço.
- **Opcional**—Peças cujo reparo feito pelo cliente é opcional. Essas peças também são projetadas para o reparo feito pelo cliente. No entanto, se desejar que a Hewlett Packard Enterprise as substitua, pode haver ou não a cobrança de taxa adicional, dependendo do tipo de serviço de garantia destinado ao produto.

OBSERVAÇÃO: Algumas peças da Hewlett Packard Enterprise não são projetadas para o reparo feito pelo cliente. A fim de cumprir a garantia do cliente, a Hewlett Packard Enterprise exige que um técnico autorizado substitua a peça. Essas peças estão identificadas com a marca "No" (Não), no catálogo de peças ilustrado.

Conforme a disponibilidade e o local geográfico, as peças CSR serão enviadas no primeiro dia útil após o pedido. Onde as condições geográficas permitirem, a entrega no mesmo dia ou em quatro horas pode ser feita mediante uma taxa adicional. Se precisar de auxílio, entre em contato com o Centro de suporte técnico da Hewlett Packard Enterprise para que um técnico o ajude por telefone. A Hewlett Packard Enterprise especifica nos materiais fornecidos com a peça CSR de reposição se a peça com defeito deve ser devolvida à Hewlett Packard Enterprise. Nos casos em que isso for necessário, é preciso enviar a peça com defeito à Hewlett Packard Enterprise, você deverá enviar a peça com defeito de volta para a Hewlett Packard Enterprise dentro do período de tempo definido, normalmente em 5 (cinco) dias úteis. A peça com defeito deve ser enviada com a documentação correspondente no material de transporte fornecido. Caso não o faça, a Hewlett Packard Enterprise poderá cobrar a reposição. Para as peças de reparo feito pelo cliente, a Hewlett Packard Enterprise paga todas as despesas de transporte e de devolução da peça e determina a transportadora/serviço postal a ser utilizado.

Para obter mais informações sobre o programa de reparo feito pelo cliente da Hewlett Packard Enterprise, entre em contato com o fornecedor de serviços local. Para o programa norte-americano, visite o site da Hewlett Packard Enterprise (http://www.hpe.com/support/selfrepair).

カスタマーセルフリペア

修理時間を短縮し、故障部品の交換における高い柔軟性を確保するために、Hewlett Packard Enterprise製品には多数のカスタマーセルフリペア（CSR）部品があります。診断の際に、CSR部品を使用すれば修理ができるとHewlett Packard Enterprise（Hewlett Packard EnterpriseまたはHewlett Packard Enterprise正規保守代理店）が判断した場合、Hewlett Packard Enterpriseはその部品を直接、お客様に発送し、お客様に交換していただきます。CSR部品には以下の2種類があります。

- **必須** - カスタマーセルフリペアが必須の部品。当該部品について、もしもお客様がHewlett Packard Enterpriseに交換作業を依頼される場合には、その修理サービスに関する交通費および人件費がお客様に請求されます。
- **任意** - カスタマーセルフリペアが任意である部品。この部品もカスタマーセルフリペア用です。当該部品について、もしもお客様がHewlett Packard Enterpriseに交換作業を依頼される場合には、お買い上げの製品に適用される保証サービス内容の範囲内においては、別途費用を負担していただくことなく保証サービスを受けることができます。

注：Hewlett Packard Enterprise製品の一部の部品は、カスタマーセルフリペアの対象外です。製品の保証を継続するためには、Hewlett Packard EnterpriseまたはHewlett Packard Enterprise正規保守代理店による交換作業が必須となります。部品カタログには、当該部品がカスタマーセルフリペア除外品である旨が記載されています。

部品供給が可能な場合、地域によっては、CSR部品を翌営業日に届くように発送します。また、地域によっては、追加費用を負担いただくことにより同日または4時間以内に届くように発送することも可能な場合があります。サポートが必要なときは、Hewlett Packard Enterpriseの修理受付窓口に電話していただければ、技術者が電話でアドバイスします。交換用のCSR部品または同梱物には、故障部品をHewlett Packard Enterpriseに返送する必要があるかどうかが表示されています。故障部品をHewlett Packard Enterpriseに返送する必要がある場合は、指定期限内（通常は5営業日以内）に故障部品をHewlett Packard Enterpriseに返送してください。故障部品を返送する場合は、届いた時の梱包箱に関連書類とともに入れてください。故障部品を返送しない場合、Hewlett Packard Enterpriseから部品費用が請求されます。カスタマーセルフリペアの際には、Hewlett Packard Enterpriseは送料および部品返送費を全額負担し、使用する宅配便会社や運送会社を指定します。

客户自行维修

Hewlett Packard Enterprise 产品提供许多客户自行维修 (CSR) 部件，以尽可能缩短维修时间和在更换缺陷部件方面提供更大的灵活性。如果在诊断期间 Hewlett Packard Enterprise（或Hewlett Packard Enterprise 服务提供商或服务合作伙伴）确定可以通过使用 CSR 部件完成维修，Hewlett Packard Enterprise 将直接把该部件发送给您进行更换。有两类 CSR 部件：

- **强制性的** — 要求客户必须自行维修的部件。如果您请求 Hewlett Packard Enterprise 更换这些部件，则必须为该服务支付差旅费和人工费用。
- **可选的** — 客户可以选择是否自行维修的部件。这些部件也是为客户自行维修设计的。不过，如果您要求 Hewlett Packard Enterprise 为您更换这些部件，则根据为您的产品指定的保修服务类型，Hewlett Packard Enterprise 可能收取或不再收取任何附加费用。

注：某些 Hewlett Packard Enterprise 部件的设计并未考虑客户自行维修。为了满足客户保修的需要，Hewlett Packard Enterprise 要求授权服务提供商更换相关部件。这些部件在部件图解目录中标记为“否”。

CSR 部件将在下一个工作日发运（取决于备货情况和允许的地理范围）。在允许的地理范围内，可在当天或四小时内发运，但要收取额外费用。如果需要帮助，您可以致电 Hewlett Packard Enterprise 技术支持中心，将会有技术人员通过电话为您提供帮助。Hewlett Packard Enterprise 会在随更换的 CSR 部件发运的材料中指明是否必须将有缺陷的部件返还给 Hewlett Packard Enterprise。如果要求您将有缺陷的部件返还给 Hewlett Packard Enterprise，那么您必须在规定的期限内（通常是五 (5) 个工作日）将缺陷部件发给 Hewlett Packard Enterprise。有缺陷的部件必须随所提供的发运材料中的相关文件一起返还。如果未能送还有缺陷的部件，Hewlett Packard Enterprise 可能会要求您支付更换费用。客户自行维修时，Hewlett Packard Enterprise 将承担所有相关运输和部件返回费用，并指定快递商/承运商。

有关 Hewlett Packard Enterprise 客户自行维修计划的详细信息，请与您当地的服务提供商联系。有关北美地区的计划，请访问 Hewlett Packard Enterprise 网站 (http://www.hpe.com/support/selfrepair)。

客戶自行維修

Hewlett Packard Enterprise 產品設計了許多「客戶自行維修」(CSR) 的零件以減少維修時間，並且使得更換瑕疵零件時能有更大的彈性。如果在診斷期間，Hewlett Packard Enterprise (或 Hewlett Packard Enterprise 服務供應商或維修夥伴) 辨認出此項維修工作可以藉由使用 CSR 零件來完成，則 Hewlett Packard Enterprise 將直接寄送該零件給您作更換。CSR 零件分為兩種類別：

- **強制的** — 客戶自行維修所使用的零件是強制性的。如果您要求 Hewlett Packard Enterprise 更換這些零件，Hewlett Packard Enterprise 將會向您收取此服務所需的外出費用與勞動成本。
- **選購的** — 客戶自行維修所使用的零件是選購的。這些零件也設計用於客戶自行維修之用。不過，如果您要求 Hewlett Packard Enterprise 為您更換，則可能需要也可能不需要負擔額外的費用，端視針對此產品指定的保固服務類型而定。

備註：某些 Hewlett Packard Enterprise 零件沒有消費者可自行維修的設計。為符合客戶保固，Hewlett Packard Enterprise 需要授權的服務供應商更換零件。這些零件在圖示的零件目錄中，被標示為「否」。

基於材料取得及環境允許的情況下，CSR 零件將於下一個工作日以快遞寄送。在環境的允許下當天或四小時內送達，則可能需要額外的費用。若您需要協助，可致電 Hewlett Packard Enterprise 支援中心，會有一位技術人員透過電話來協助您。不論損壞的零件是否必須退回，Hewlett Packard Enterprise 皆會在與 CSR 替換零件一起運送的材料中註明。若要將損壞的零件退回 Hewlett Packard Enterprise，您必須在指定的一段時間內 (通常為五 (5) 個工作天)，將損壞的零件寄回 Hewlett Packard Enterprise。損壞的零件必須與寄送資料中隨附的相關技術文件一併退還。如果無法退還損壞的零件，Hewlett Packard Enterprise 可能要向您收取替換費用。針對客戶自行維修情形，Hewlett Packard Enterprise 將負責所有運費及零件退還費用，並指定使用何家快遞/貨運公司。

如需 Hewlett Packard Enterprise 的 CSR 方案詳細資訊，請連絡您當地的服務供應商。至於北美方案，請參閱 Hewlett Packard Enterprise 的 CSR 網站frepair (http://www.hpe.com/support/selfrepair)。

고객 셀프 수리

Hewlett Packard Enterprise 제품은 수리 시간을 최소화하고 결함이 있는 부품 교체 시 더욱 융통성을 발휘할 수 있도록 하기 위해 고객 셀프 수리(CSR) 부품을 다량 사용하여 설계되었습니다. 진단 기간 동안 Hewlett Packard Enterprise(또는 Hewlett Packard Enterprise 서비스 공급업체 또는 서비스 협력업체)에서 CSR 부품을 사용하여 수리가 가능하다고 판단되면 Hewlett Packard Enterprise는 해당 부품을 바로 사용자에게 보내어 사용자가 교체할 수 있도록 합니다. CSR 부품에는 두 가지 종류가 있습니다.

- **필수** - 고객 셀프 수리가 의무 사항인 필수 부품. 사용자가 Hewlett Packard Enterprise에 이 부품의 교체를 요청할 경우 이 서비스에 대한 출장비 및 작업비가 청구됩니다.
- **선택 사항** - 고객 셀프 수리가 선택 사항인 부품. 이 부품들도 고객 셀프 수리가 가능하도록 설계되었습니다. 하지만 사용자가 Hewlett Packard Enterprise에 이 부품의 교체를 요청할 경우 사용자가 구입한 제품에 해당하는 보증 서비스 유형에 따라 추가 비용 없이 교체가 가능할 수 있습니다.

참고: 일부 Hewlett Packard Enterprise 부품은 고객 셀프 수리가 불가능하도록 설계되었습니다. Hewlett Packard Enterprise는 만족스러운 고객 보증을 위해 공인 서비스 제공업체를 통해 부품을 교체하도록 하고 있습니다. 이러한 부품들은 Illustrated Parts Catalog에 "No"라고 표시되어 있습니다.

CSR 부품은 재고 상태와 지리적 조건이 허용하는 경우 다음 영업일 납품이 가능하도록 배송이 이루어집니다. 지리적 조건이 허용하는 경우 추가 비용이 청구되는 조건으로 당일 또는 4시간 배송이 가능할 수도 있습니다. 도움이 필요하시면 Hewlett Packard Enterprise Support Center로 전화하십시오. 전문 기술자가 전화로 도움을 줄 것입니다. Hewlett Packard Enterprise는 결함이 발생한 부품을 Hewlett Packard Enterprise로 반환해야 하는지 여부를 CSR 교체 부품과 함께 배송된 자료에 지정합니다. 결함이 발생한 부품을 Hewlett Packard Enterprise로 반환해야 하는 경우에는 지정된 기간 내(통상 영업일 기준 5일)에 Hewlett Packard Enterprise로 반환해야 합니다. 이때 결함이 발생한 부품은 제공된 포장 재료에 넣어 관련 설명서와 함께 반환해야 합니다. 결함이 발생한 부품을 반환하지 않는 경우 Hewlett Packard Enterprise가 교체 부품에 대해 비용을 청구할 수 있습니다. 고객 셀프 수리의 경우, Hewlett Packard Enterprise는 모든 운송 및 부품 반환 비용을 부담하며 이용할 운송업체 및 택배 서비스를 결정합니다.

Hewlett Packard Enterprise CSR 프로그램에 대한 자세한 내용은 가까운 서비스 제공업체에 문의하십시오. 북미 지역의 프로그램에 대해서는 Hewlett Packard Enterprise CSR 웹 사이트(http://www.hpe.com/support/selfrepair)를 참조하십시오.

Remote support

Remote support is available with supported devices as part of your warranty or contractual support agreement. It provides intelligent event diagnosis, and automatic, secure submission of hardware event notifications to Hewlett Packard Enterprise, which will initiate a fast and accurate resolution based on your product's service level. Hewlett Packard Enterprise strongly recommends that you register your device for remote support.

For more information and device support details, go to the Insight Remote Support website (http://www.hpe.com/info/insightremotesupport/docs).

Acronyms and abbreviations

ABEND

abnormal end

ACU

Array Configuration Utility

AMP

Advanced Memory Protection

ASR

Automatic Server Recovery

BMC

baseboard management controller

BSMI

Bureau of Standards, Metrology and Inspection

CE

Conformité Européenne (European Conformity)

CSA

Canadian Standards Association

CSR

Customer Self Repair

DDR

double data rate

EMI

electromagnetic interference

FBWC

flash-backed write cache

FCC

Federal Communications Commission

HP SUM

HP Smart Update Manager

HPE SIM

HPE Systems Insight Manager

IEC

International Electrotechnical Commission

iLO

Integrated Lights-Out

IML

Integrated Management Log

ISO

International Organization for Standardization

LFF

large form factor

LRDIMM

load reduced dual in-line memory module

NMI

nonmaskable interrupt

NVRAM

nonvolatile memory

ORCA

Option ROM Configuration for Arrays

PCIe

Peripheral Component Interconnect Express

PDU

power distribution unit

POST

Power-On Self Test

PXE

preboot execution environment

RBSU

ROM-Based Setup Utility

RDIMM

registered dual in-line memory module

RDP

Rapid Deployment Pack

RF

radio frequency

RFI

radio frequency interference

RPS

redundant power supply

SAS

serial attached SCSI

SATA

serial ATA

SD

Secure Digital

SFF

small form factor

SPP

Service Pack for ProLiant

TMRA

recommended ambient operating temperature

TPM

Trusted Platform Module

UDIMM

unregistered dual in-line memory module

UID

unit identification

USB

universal serial bus

VCA

Version Control Agent

VCRM

Version Control Repository Manager

xHCI

Extensible Host Controller Interface

Documentation feedback

Hewlett Packard Enterprise is committed to providing documentation that meets your needs. To help us improve the documentation, send any errors, suggestions, or comments to Documentation Feedback (mailto:docsfeedback@hpe.com). When submitting your feedback, include the document title, part number, edition, and publication date located on the front cover of the document. For online help content, include the product name, product version, help edition, and publication date located on the legal notices page.

Index

A

access panel 18, 19
Array Configuration Utility (ACU) 70
ASR (Automatic Server Recovery) 72
authorized reseller 80, 83
auto-configuration process 69
Automatic Server Recovery (ASR) 72

B

bezel 17
BIOS upgrade 64, 72
boot options 70
BSMI notice 78
buttons 6
buttons, front panel 6

C

cables 58
cabling 58, 59, 61, 62, 63
cache module 14
Canadian notice 78
capacitor pack cabling 63
Care Pack 21, 67, 74, 83
cautions 80
Change Control 75
components 6
components, front panel 6
components, identification 6
configuration of system 64
connectors 6
contacting Hewlett Packard Enterprise 83
controller 35
CSR (customer self repair) 84
customer self repair (CSR) 84

D

device numbers 12
diagnostic tools 64, 67, 72
diagnostics utility 67
DIMM identification 41
DIMM slot locations 11
DIMMs 42
DIMMs, installing 43
DIMMs, single- and dual-rank 42
drive LEDs 13
drivers 73
drives 12, 13, 27, 30, 33
drives, installing 27

E

electrical grounding requirements 22
electrostatic discharge 80
enabling the Trusted Platform Module 50
environmental requirements 21, 22, 81
environmental specifications 81
Erase Utility 64, 67
error messages 76
European Union notice 78
expansion board options 44

F

fan module location 15
FBWC cabling 59
FBWC module 36
FBWC module LEDs 14
features 6, 70
Federal Communications Commission (FCC) notice 78
firmware 73
front panel components 6

G

grounding methods 80
grounding requirements 22, 80

H

hardware options installation 27
health driver 72
help resources 83
Hewlett Packard Enterprise contact information 83
Hewlett Packard Enterprise Support 83
Hewlett Packard Enterprise Technical Support 74, 83, 91
Hewlett Packard Enterprise website 83
Hewlett Packard Enterprise, contacting 83
Hot-plug SAS/SATA hard drive cabling 59
HP Smart Update Manager overview 64, 68
HPE Insight Diagnostics 67
HPE Insight Remote Support software 67, 74

I

iLO (Integrated Lights-Out) 64, 65, 66
IML (Integrated Management Log) 64, 66
Insight Diagnostics 67, 73
installation services 21, 24

installation, server options 24, 27
installing hardware 24, 27
installing the server into the rack 24
Integrated Lights-Out (iLO) 64, 66
Integrated Management Log (IML) 66
Intelligent Provisioning 64, 66, 67

J

Japanese notice 78

L

LEDs 13
LEDs, FBWC module 14
LEDs, front panel 13
LEDs, troubleshooting 76

M

media drive bay cabling 61
memory 41, 42
memory options 40
modes 64

N

NMI functionality 12
NMI header 12
notification actions 75
numbering, device bay 12

O

operating system installation 25, 74
operating systems 74
optical drive 38
optimum environment 21
Option ROM Configuration for Arrays (ORCA) 64, 71
options installation 21, 24, 27, 30, 40
ORCA (Option ROM Configuration for Arrays) 64, 71

P

PCI expansion slots 11
phone numbers 83
population guidelines 27
power distribution unit (PDU) 22
power requirements 22
power supply 82
power supply cabling 62
powering down 16
powering up 16
preparation procedures 16
problem diagnosis 76
Product ID 70

Q

QuickSpecs 47, 64

R

rack installation 21, 24
rack resources 21
rack warnings 23
RBSU (ROM-Based Setup Utility) 64, 69, 70
rear panel components 8
rear panel LEDs 9
recovering a lost password 49
redundant power supply cabling 63
redundant ROM 73
re-entering the server serial number 70
regulatory compliance notices 78, 79
retaining the recovery key/password 49
ROM redundancy 73
ROMPaq utility 64, 72, 73

S

safety considerations 73, 78, 80
SAS and SATA device numbers 12
scripted installation 68
scripting toolkit 64, 68
security 73
serial number 70
series number 78
server features and options 27
Server mode 64
server setup 21, 24, 25, 73
server specifications 81
server warnings and cautions 23
Service Packs 68
shipping carton contents 23
Smart Update Manager 64, 68
software 73, 74
space and airflow requirements 21
specifications 81, 82
specifications, environmental 81
specifications, server 81
static electricity 80
support 83
supported operating systems 74
switch, system maintenance 11
system board components 10
system components 6
system configuration settings 11, 73
system maintenance switch 11

T

Taiwan battery recycling notice 78
technical support 74, 83
telco racks 24
telephone numbers 83
temperature requirements 22, 81

tower bezel, installing 17
tower bezel, removing 17
TPM (Trusted Platform Module) 47, 48, 49, 50
troubleshooting 76

U

updating the system ROM 73
USB support 72
utilities 64, 70
utilities, deployment 64, 68, 69

V

ventilation 21
Version Control 74
Virtualization option 74

W

warnings 23
website, Hewlett Packard Enterprise 83