Hewlett Packard
Enterprise

HPE Proliant ML350p Gen8 Server
User Guide

Abstract

This document is for the person who installs, administers, and troubleshoots servers and storage systems. This document is intended for experienced IT professionals or end-users with no or prior hardware setup experience. Hewlett Packard Enterprise assumes you are qualified in the servicing of computer equipment and trained in recognizing hazards in products with hazardous energy levels.

Part Number: 661082-008R
January 2016
Edition: 9

© Copyright 2012, 2016 Hewlett Packard Enterprise Development LP

The information contained herein is subject to change without notice. The only warranties for Hewlett Packard Enterprise products and services are set forth in the express warranty statements accompanying such products and services. Nothing herein should be construed as constituting an additional warranty. Hewlett Packard Enterprise shall not be liable for technical or editorial errors or omissions contained herein.

Links to third-party websites take you outside the Hewlett Packard Enterprise website. Hewlett Packard Enterprise has no control over and is not responsible for information outside the Hewlett Packard Enterprise website.

Microsoft® and Windows® are U.S. are either registered trademarks or trademarks of Microsoft Corporation in the United States and/or other countries.

Contents

Component identification 6
Front panel components 6
Front panel LEDs and buttons 7
Rear panel components 8
Rear panel LEDs 9
System board components 10
DIMM slots 11
System maintenance switch 11
NMI functionality 12
Systems Insight Display LEDs 13
Systems Insight Display LED combinations 13
SAS and SATA device numbers 14
Hot-plug drive LED definitions 15
Fans 16
RPS riser board connectors 17
Operations 18
Power up the server 18
Power down the server 18
Remove the security bezel 19
Install the security bezel 19
Remove the tower bezel 19
Remove the rack bezel 20
Install the rack bezel 21
Remove the access panel 21
Install the access panel 22
Extend the server from the rack 22
Remove the air baffle 23
Install the air baffle 24
Remove the fan 24
Remove the fan cage 25
Remove the optical drive 26
Remove the component drive cage blank 27
Setup 28
Optional services 28
Rack planning resources 28
Optimum environment 28
Space and airflow requirements 28
Temperature requirements 29
Power requirements 29
Electrical grounding requirements 30
Rack warnings 30
Server warnings and cautions 31
Identifying tower server shipping carton contents 31
Installing hardware options 32
Setting up a tower server 32
Installing the server into the rack 33
Powering up and configuring the server 39
Installing the operating system 40
Registering the server 40
Hardware options installation 41
Introduction 41
Mini-SAS cable option 41

Second processor option....43
Processor upgrade....49
Memory options....55
HPE SmartMemory....56
Memory subsystem architecture....56
Population order....57
Installing a DIMM....57
Single-, dual-, and quad-rank DIMMs....58
DIMM identification....59
Memory configurations....59
General DIMM slot population guidelines....60
Optical drive cage option....62
Optical drive option....64
Redundant power supply option....66
Hot-plug SAS drive options....68
Removing the drive blank....68
Installing a hot-plug drive....68
Expansion board option....69
Graphic card option....72
Installing a graphic card adapter option....72
Controller option....76
Installing a storage controller....76
Installing the cache module and FBWC capacitor pack....78
Redundant fans option....80
Redundant fan guidelines....80
Installing a hot-plug redundant fan....80
Eight-bay SFF drive cage option....83
Installing the optional SFF hot-plug drive cage....83
Six-bay LFF drive cage....86
Installing the optional LFF hot-plug drive cage....86
Drive backplane expander option....89
Installing the 6 bay LFF drive backplane expander....89
Installing the 8 bay SFF drive backplane expander....94
HP Trusted Platform Module option....99
Installing the Trusted Platform Module board....99
Retaining the recovery key/password....101
Enabling the Trusted Platform Module....101

Cabling....103
Server data cabling....103
Media device data cabling....104
Optical drive cabling....104

Software and configuration utilities....105
Server mode....105
Hewlett Packard Enterprise product QuickSpecs....105
HPE iLO Management....105
HPE iLO....105
Intelligent Provisioning....107
HPE Insight Remote Support....108
Scripting Toolkit for Windows and Linux....108
Service Pack for ProLiant....109
HP Smart Update Manager....109
HPE ROM-Based Setup Utility....109
Using RBSU....109
Auto-configuration process....110
Boot options....110
Configuring AMP modes....111
Re-entering the server serial number and product ID....111
Utilities and features....111
HPE Smart Storage Administrator....111
Option ROM Configuration for Arrays....112

ROMPaq utility....112
Automatic Server Recovery....112
USB support....113
Redundant ROM support....113
Keeping the system current....113
Drivers....113
Software and firmware....114
Version control....114
Operating systems and virtualization software support for ProLiant servers....114
Change control and proactive notification....114
Troubleshooting....115
Troubleshooting resources....115
Battery replacement....116
Warranty and regulatory information....118
Warranty information....118
Regulatory information....118
Safety and regulatory compliance....118
Belarus Kazakhstan Russia marking....118
Turkey RoHS material content declaration....119
Ukraine RoHS material content declaration....119
Electrostatic discharge....120
Preventing electrostatic discharge....120
Grounding methods to prevent electrostatic discharge....120
Specifications....121
Environmental specifications....121
Server specifications....121
Power supply specifications....121
HPE 460 W Gold Power Supply (92% efficiency)....122
HPE 460 W Platinum Plus Power Supply (94% efficiency)....122
HPE 750 W Gold Power Supply (92% efficiency)....122
HPE 750 W Platinum Plus Power Supply (94% efficiency)....123
HPE 1200 W Platinum Plus Power Supply (94% efficiency)....123
Support and other resources....124
Accessing Hewlett Packard Enterprise Support....124
Information to collect....124
Accessing updates....124
Websites....124
Customer Self Repair....125
Remote support....132
Acronyms and abbreviations....133
Documentation feedback....136
Index....137

Component identification

Front panel components

- SFF

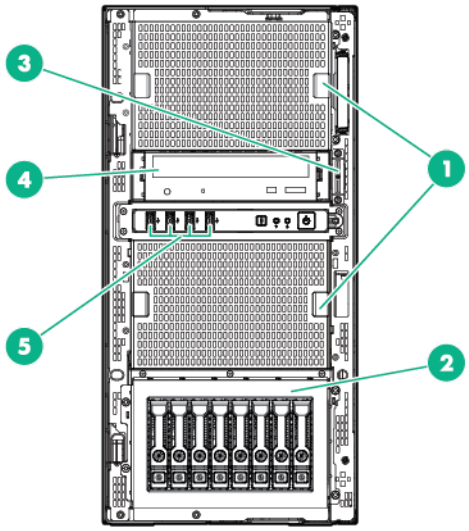

Item	Description
1	Media/Drive cage bay
2	SAS/SATA drives (8)
3	Serial number/iLO information pull tab*
4	Optical drive
5	USB connectors (4)

*The serial number/iLO information pull tab is double-sided. The top side shows the server serial number, and the reverse side shows the default iLO account information. The same information is printed on a label attached to the chassis.

- LFF

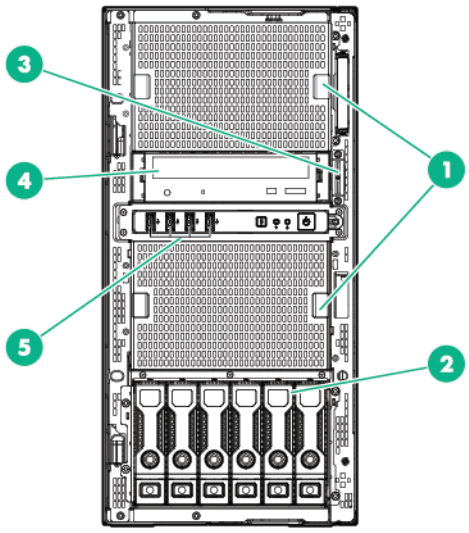

Item	Description
1	Media/Drive cage bay
2	SAS/SATA drive (6)
3	Serial number/iLO information pull tab*
4	Optical drive
5	USB connectors (4)

*The serial number/iLO information pull tab is double-sided. The top side shows the server serial number, and the reverse side shows the default iLO account information. The same information is printed on a label attached to the chassis.

Front panel LEDs and buttons

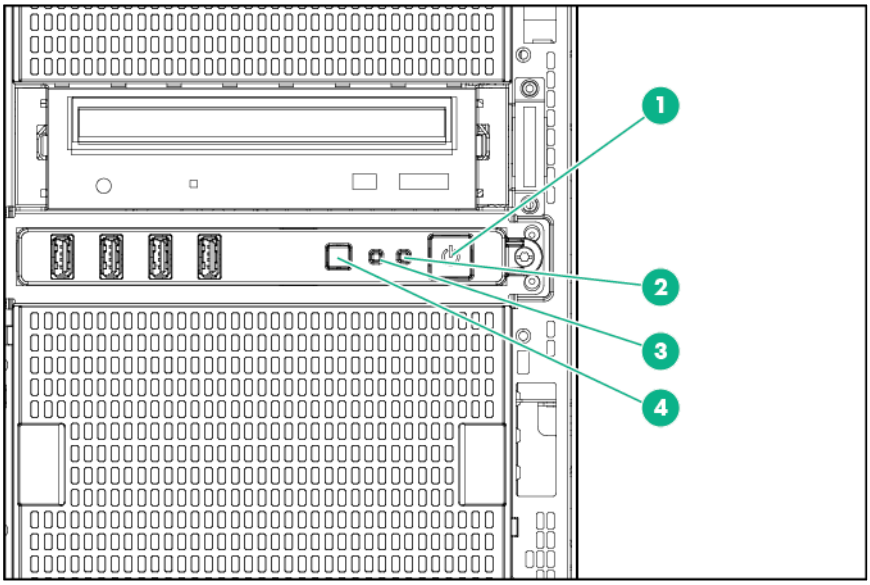

Item	Description	Status
1	Power On/Standby button and system power LED	Solid green = System on Flashing green (1 Hz/cycle per sec) = Performing power on sequence Solid amber = System in standby Off = No power present*
2	NIC status LED	Solid green = Link to network Flashing green (1 Hz/cycle per sec) = Network active Off = No network activity
3	Health LED	Solid green = Normal Flashing amber = System degraded Flashing red (1 Hz/cycle per sec) = System critical Fast-flashing red (4 Hz/cycles per sec) = Power fault**
4	UID button/LED	Solid blue = Activated Flashing blue (1 Hz/cycle per sec) = Remote management or firmware upgrade in progress Off = Deactivated

*Facility power is not present, power cord is not attached, no power supplies are installed, power supply failure has occurred, or the power button cable is disconnected.
**To identify components in a degraded or critical state, see the Systems Insight Display LEDs, check iLO/BIOS logs, and reference the server troubleshooting guide.

Rear panel components

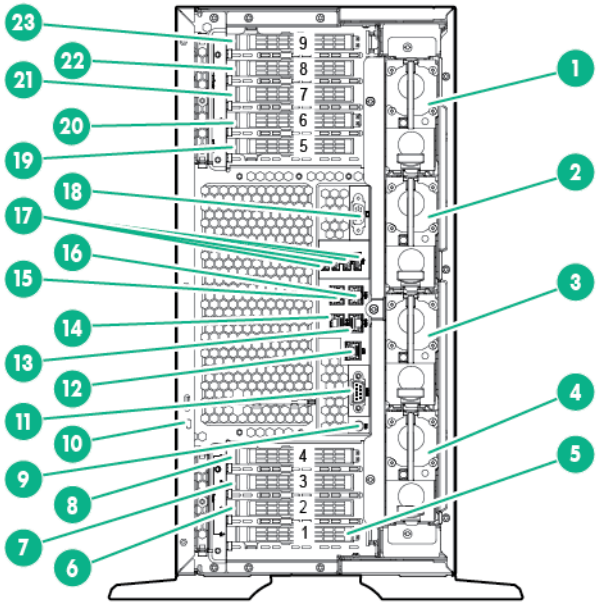

Item	Description
1	Power supply 4
2	Power supply 3
3	Power supply 2
4	Power supply 1
5	PCIe slot 1 (Processor 1)
6	PCIe slot 2 (Processor 1)

Item	Description
7	PCIe slot 3 (Processor 1)
8	PCIe slot 4 (Processor 1)
9	UID button/LED
10	Kensington security lock
11	Serial connector
12	iLO connector
13	NIC connector 3
14	NIC connector 4
15	NIC connector 2
16	NIC connector 1
17	USB connectors (4)
18	Video connector
19	PCIe slot 5 (Processor 2)
20	PCIe slot 6 (Processor 2)
21	PCIe slot 7 (Processor 2)
22	PCIe slot 8 (Processor 2)
23	PCIe slot 9 (Processor 2)

Rear panel LEDs

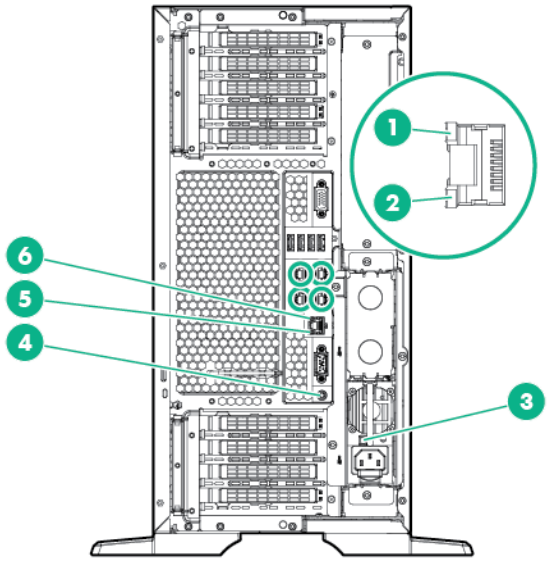

Item	Description	Status
1	NIC activity LED	Green or flashing green = Network activity Off = No network activity
2	NIC link LED	Green = Linked to network Off = No network connection

Item	Description	Status
3	Power supply LED	Green = Normal Off = One or more of the following conditions exists: • Power is unavailable. • Power supply failed. • Power supply is in standby mode. • Power supply exceeded current limit.
4	UID LED	Blue = Activated Flashing blue = System is being managed remotely Off = Deactivated
5	iLO 4 link LED	Green = Linked to network Off = No network connection
6	iLO 4 activity LED	Green or flashing green = Network activity Off = No network activity

System board components

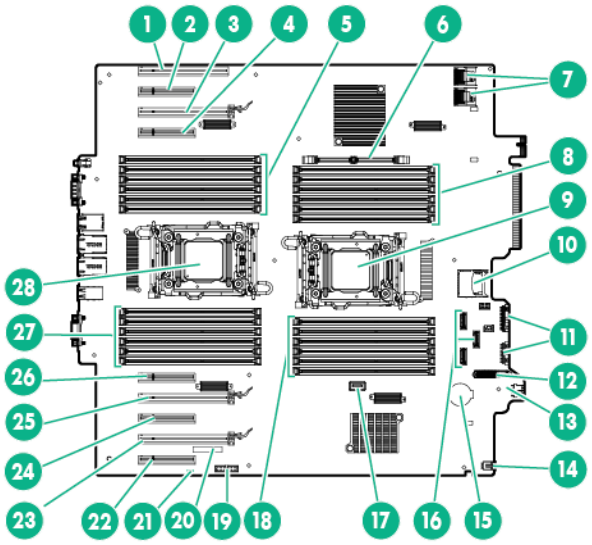

Item	Description
1	Slot 1 PCIe3 x16 (8, 4, 1)
2	Slot 2 PCIe3 x8 (4, 1)
3	Slot 3 PCIe3 x16 (16, 8, 4, 1)
4	Slot 4 PCIe3 x8 (4, 1)
5	Processor 1 DIMM slots
6	Smart Array P420i memory cache module
7	Mini-SAS connectors (2)
8	Processor 2 DIMM slots
9	Processor socket 2
10	SD card slot
11	Front panel connectors (2)
12	Fan cage connector
13	Internal USB tape connector
14	Discovery service cable connector

Item	Description
15	System battery
16	SATA connectors
17	Internal USB connector
18	Processor 2 DIMM slots
19	TPM connector
20	System maintenance switch
21	NMI header
22	Slot 9 PCIe3 x8 (4, 1)
23	Slot 8 PCIe3 x16 (16, 8, 4, 1)
24	Slot 7 PCIe3 x8 (4, 1)
25	Slot 6 PCIe3 x16 (16, 8, 4, 1)
26	Slot 5 PCIe2 x8 (4, 1)
27	Processor 1 DIMM slots
28	Processor socket 1 (populated)

DIMM slots

DIMM slots are numbered sequentially (1 through 12) for each processor. The supported AMP modes use the letter assignments for population guidelines.

NOTE: For proper orientation, the arrow indicates the front of the server.

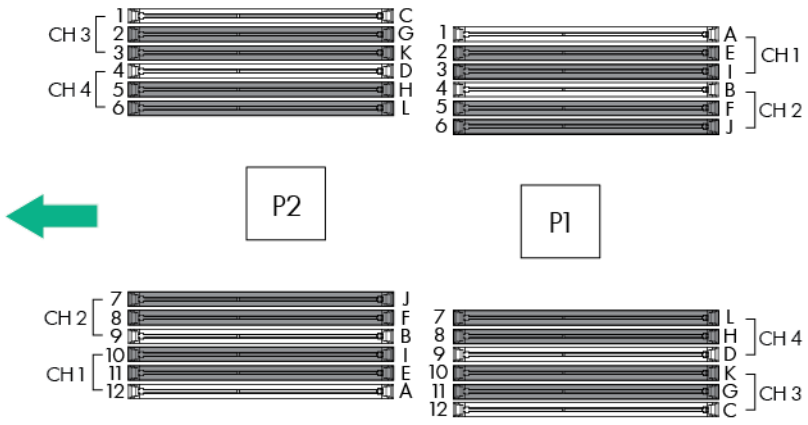

System maintenance switch

Position	Default	Function
S1	Off	Off = iLO 4 security is enabled. On = iLO 4 security is disabled.
S2	Off	Off = System configuration can be changed. On = System configuration is locked.

Position	Default	Function
S3	Off	Reserved
S4	Off	Reserved
S5	Off	Off = Power-on password is enabled. On = Power-on password is disabled.
S6	Off	Off = No function On = ROM reads system configuration as invalid.
S7	—	Reserved
S8	—	Reserved
S9	—	Reserved
S10	—	Reserved
S11	—	Reserved
S12	—	Reserved

To access the redundant ROM, set S1, S5, and S6 to On.

When the system maintenance switch position 6 is set to the On position, the system is prepared to erase all system configuration settings from both CMOS and NVRAM.

△ **CAUTION:** Clearing CMOS and/or NVRAM deletes configuration information. Be sure to properly configure the server or data loss could occur.

NMI functionality

An NMI crash dump creates a crash dump log before resetting a system which is not responding.

Crash dump log analysis is an essential part of diagnosing reliability problems, such as failures of operating systems, device drivers, and applications. Many crashes freeze a system, and the only available action for administrators is to restart the system. Resetting the system erases any information which could support problem analysis, but the NMI feature preserves that information by performing a memory dump before a system reset.

To force the system to invoke the NMI handler and generate a crash dump log, do one of the following:

- Use the iLO Virtual NMI feature.
- Short the NMI header ("System board components" on page 10).

For more information, see the Hewlett Packard Enterprise website (http://www.hpe.com/support/NMI-CrashDump).

Systems Insight Display LEDs

The Systems Insight Display LEDs represent the system board layout.

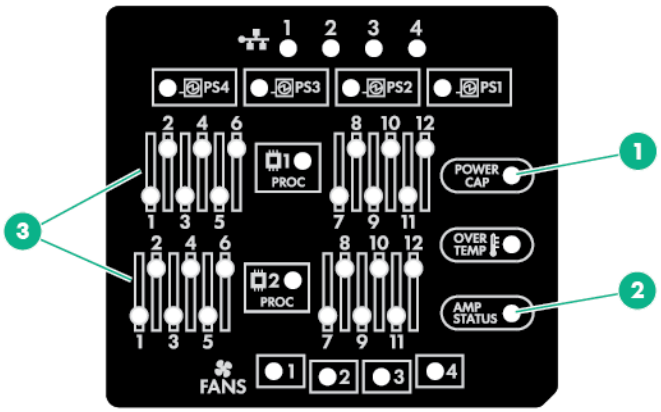

Item	Description	Status
1	Power cap	To determine Power cap status, see "Systems Insight Display LED combinations (on page 13)."
2	AMP Status	Green = AMP mode enabled Amber = Failover Off = AMP mode disabled
3	DIMM LEDs	Amber = DIMM error Off = Normal
	All other LEDs	Amber = Failure Off = Normal

IMPORTANT: If more than one DIMM slot LED is illuminated, further troubleshooting is required. Test each bank of DIMMs by removing all other DIMMs. Isolate the failed DIMM by replacing each DIMM in a bank with a known working DIMM.

Systems Insight Display LED combinations

When the health LED on the front panel illuminates either amber or red, the server is experiencing a health event. Combinations of illuminated Systems Insight Display LEDs, the system power LED, and the health LED indicate system status.

Systems Insight Display LED and color	Health LED	System power LED	Status
Processor (amber)	Red	Amber	One or more of the following conditions might exist: • Processor in socket *X* has failed. • Processor *X* is not installed in the socket. • Processor *X* is unsupported. • ROM detects a failed processor during POST
Processor (amber)	Amber	Green	Processor in socket *X* is in a pre-failure condition.
DIMM (amber)	Red	Green	One or more DIMMs have failed.
DIMM (amber)	Amber	Green	DIMM in slot *X* is in a pre-failure condition.
Overtemperature (amber)	Amber	Green	The Health Driver has detected a cautionary temperature level.
Overtemperature (amber)	Red	Amber	The server has detected a hardware critical temperature level.
Fan (amber)	Amber	Green	Fan has failed or is missing, but still meets the minimum fan requirements.
Fan (amber)	Red	Green	Fan has failed or is missing and no longer meets the minimum fan requirements.
Power supply (amber)	Red	Amber	• Only one power supply installed and in standby mode. • Power supply fault • System board fault
Power supply (amber)	Amber	Green	• Redundant power supply is installed and only one power supply is functional. • AC power cord is not plugged into redundant power supply. • Redundant power supply fault • Power supply mismatch at POST or through hot-plug addition.
Power cap (off)	—	Amber	Standby
Power cap (green)	—	Flashing green	Waiting for power
Power cap (flashing amber)	—	Amber	Power cap has been exceeded
Power cap (green)	—	Green	Power is available

IMPORTANT: If more than one DIMM slot LED is illuminated, further troubleshooting is required. Test each bank of DIMMs by removing all other DIMMs. Isolate the failed DIMM by replacing each DIMM in a bank with a known working DIMM.

SAS and SATA device numbers

With optional drive cages installed, the server supports up to 24 SFF drives or up to 18 LFF drives. The server does not support mixing SFF and LFF drives.

Hewlett Packard Enterprise recommends that you populate drive bays starting with the lowest SAS or SATA device number. Drives are numbered from left to right in each component box. Component boxes are numbered 1 through 3, from bottom to top.

- SFF drives

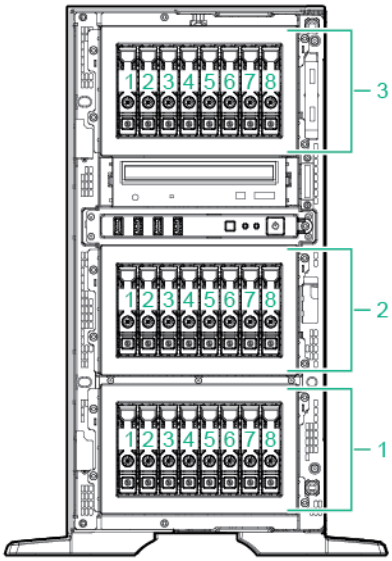

- LFF drives

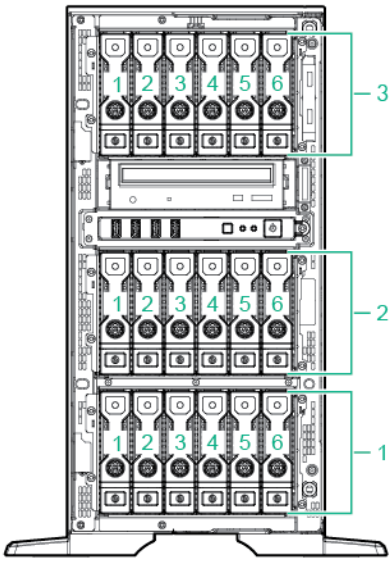

Hot-plug drive LED definitions

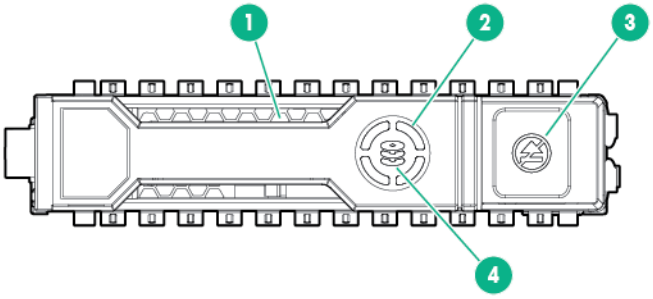

Item	LED	Status	Definition
1	Locate	Solid blue	The drive is being identified by a host application.
		Flashing blue	The drive carrier firmware is being updated or requires an update.
2	Activity ring	Rotating green	Drive activity
		Off	No drive activity
3	Do not remove	Solid white	Do not remove the drive. Removing the drive causes one or more of the logical drives to fail.
		Off	Removing the drive does not cause a logical drive to fail.
4	Drive status	Solid green	The drive is a member of one or more logical drives.
		Flashing green	The drive is rebuilding or performing a RAID migration, strip size migration, capacity expansion, or logical drive extension, or is erasing.
		Flashing amber/green	The drive is a member of one or more logical drives and predicts the drive will fail.
		Flashing amber	The drive is not configured and predicts the drive will fail.
		Solid amber	The drive has failed.
		Off	The drive is not configured by a RAID controller.

Fans

IMPORTANT: Fan louvers must be present for the redundant configuration. Without the louvers, all four fans are nonredundant.

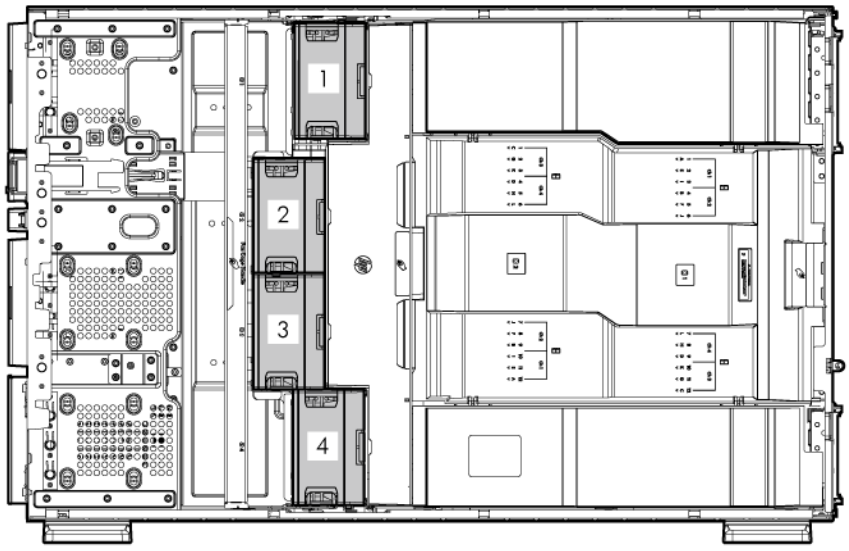

Item	Description	Configuration
1	Fan 1	Redundant (primary fan when processor 2 is installed)
2	Fan 2	Primary
3	Fan 3	Primary
4	Fan 4	Primary

RPS riser board connectors

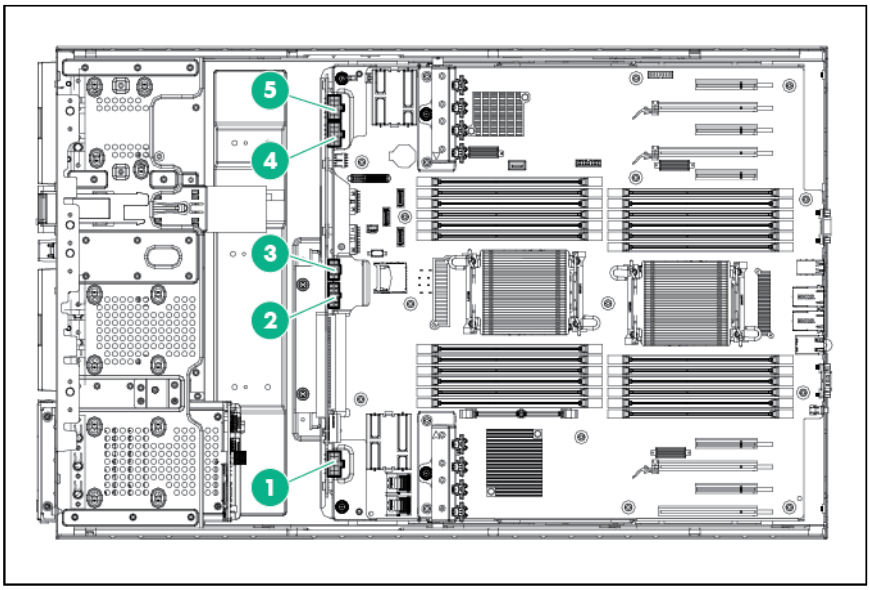

Item	Connector	Description
1	J7	Graphic card power connector
2	J9	Drive backplane bay 1/optical drive power connector
3	J5	Drive backplane bay 2 power connector
4	J6	Drive backplane bay 3 power connector
5	J8	Graphic card power connector

Operations

Power up the server

To power up the server:

1. Connect each power cord to the server.
2. Connect each power cord to the power source.
3. Press the Power On/Standby button.

   The server exits standby mode and applies full power to the system. The system power LED changes from amber to green.

Power down the server

Before powering down the server for any upgrade or maintenance procedures, perform a backup of critical server data and programs.



IMPORTANT: When the server is in standby mode, auxiliary power is still being provided to the system.

To power down the server, use one of the following methods:

- Press and release the Power On/Standby button.

  This method initiates a controlled shutdown of applications and the OS before the server enters standby mode.
- Press and hold the Power On/Standby button for more than 4 seconds to force the server to enter standby mode.

  This method forces the server to enter standby mode without properly exiting applications and the OS. If an application stops responding, you can use this method to force a shutdown.
- Use a virtual power button selection through iLO 4.

  This method initiates a controlled remote shutdown of applications and the OS before the server enters standby mode.

Before proceeding, verify the server is in standby mode by observing that the system power LED is amber.

Remove the security bezel

Unlock the security bezel, press the latch on the security bezel, and then remove the security bezel.

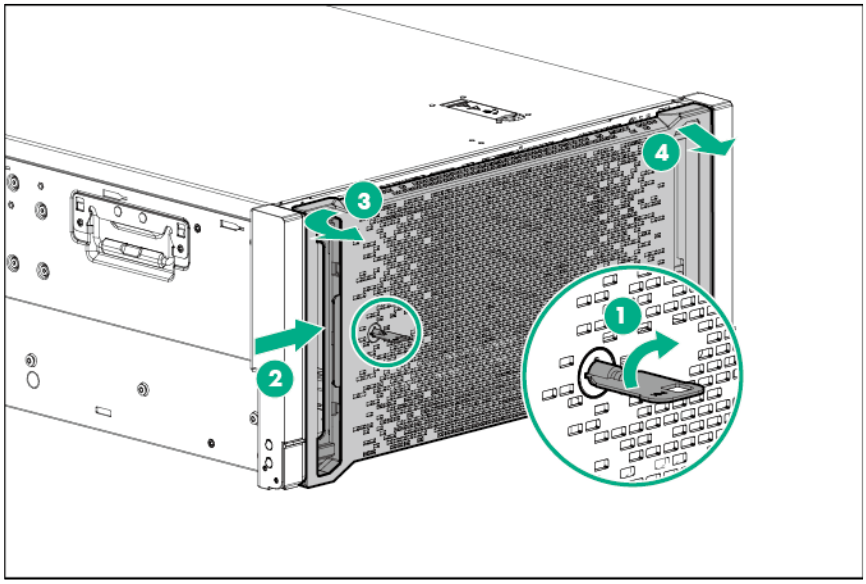

Install the security bezel

Install the security bezel into the chassis, and then lock the security bezel with the key.

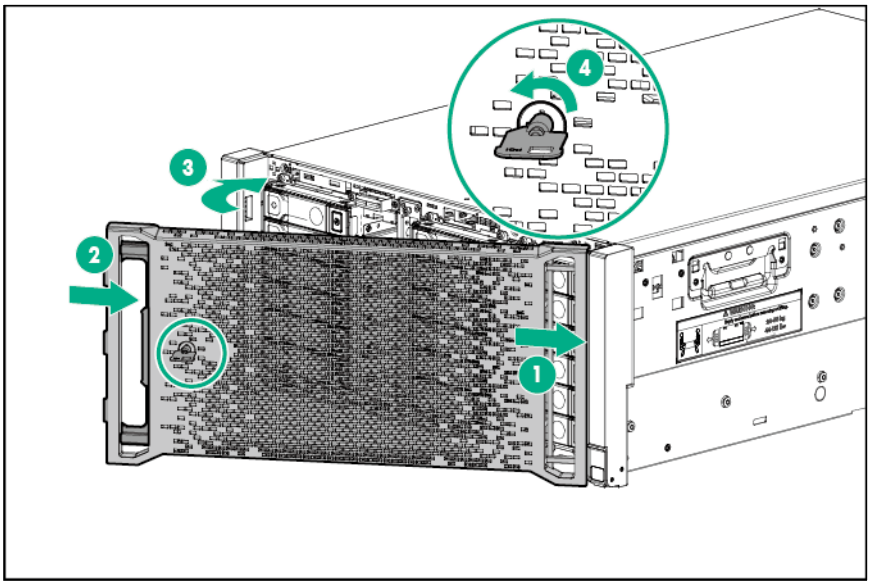

Remove the tower bezel

This server has a removable bezel that must be unlocked and opened before accessing the drives. The bezel must be kept closed during normal server operations.

1. Using the key provided with the server, unlock the bezel with a clockwise turn.

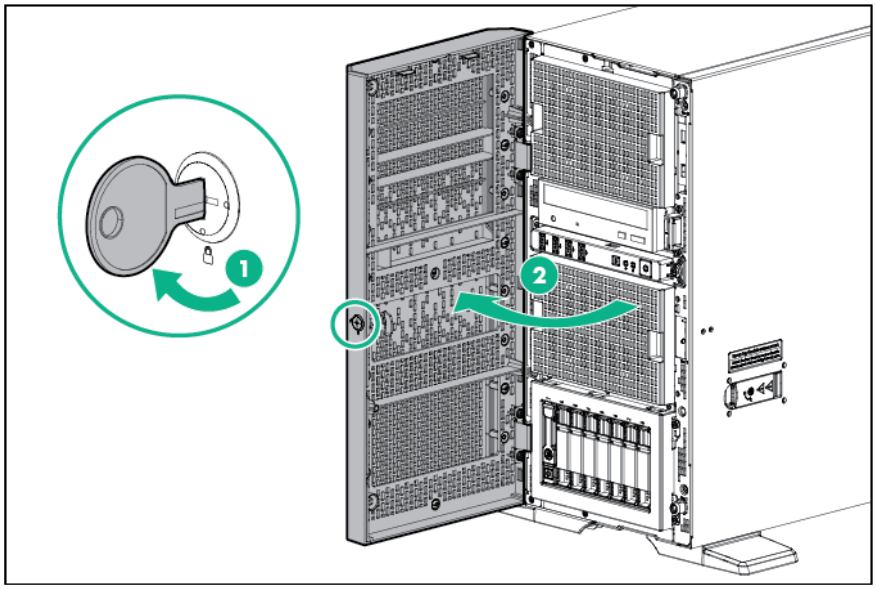

2. Remove the tower bezel.

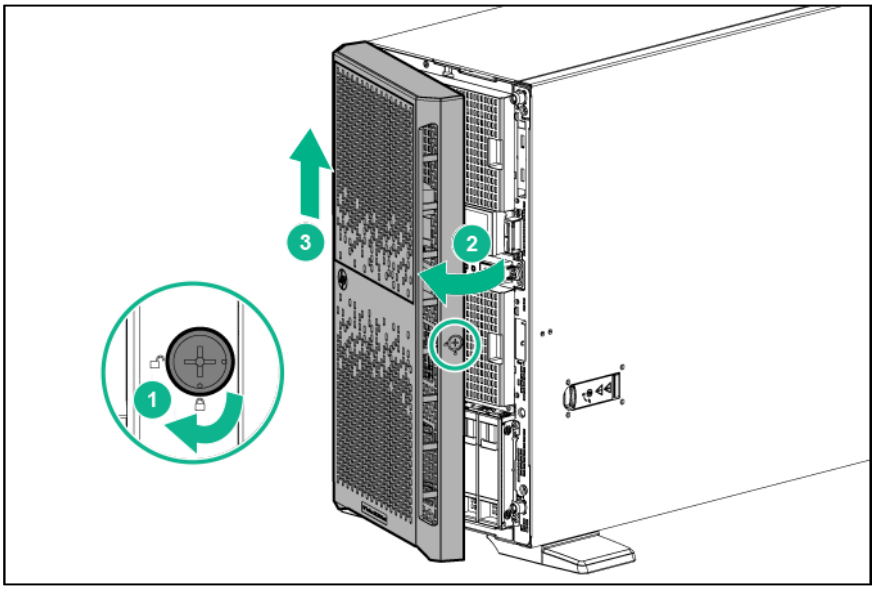

Remove the rack bezel

1. If installed, remove the security bezel (on page 19).
2. Power down the server (on page 18).
3. Remove all power:
   a. Disconnect each power cord from the power source.
   b. Disconnect each power cord from the server.
4. Extend the server from the rack (on page 22).
5. Remove the access panel (on page 21).
6. Loosen the rack bezel thumbscrews located inside the chassis.

7. Remove the rack bezel.

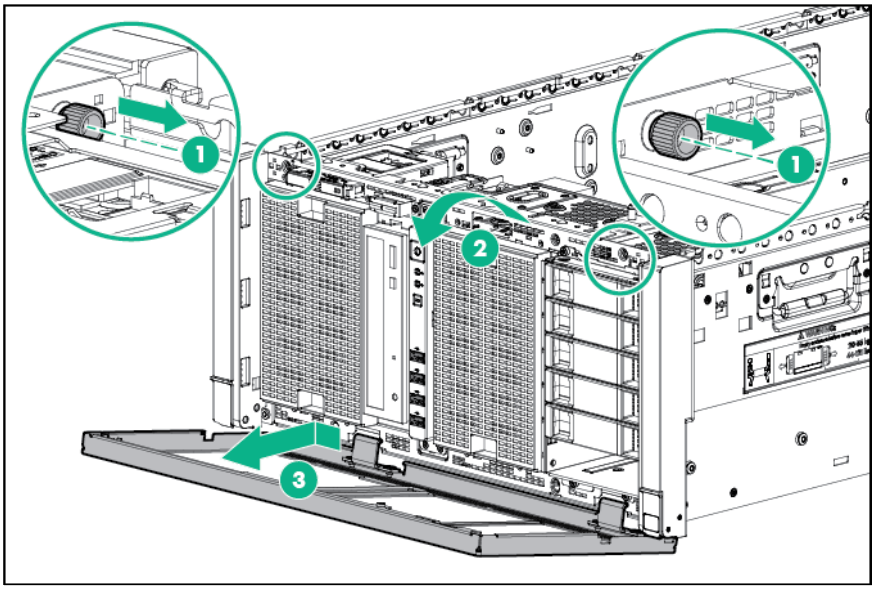

Install the rack bezel

1. Install the rack bezel.
2. Tighten the rack bezel thumbscrews.

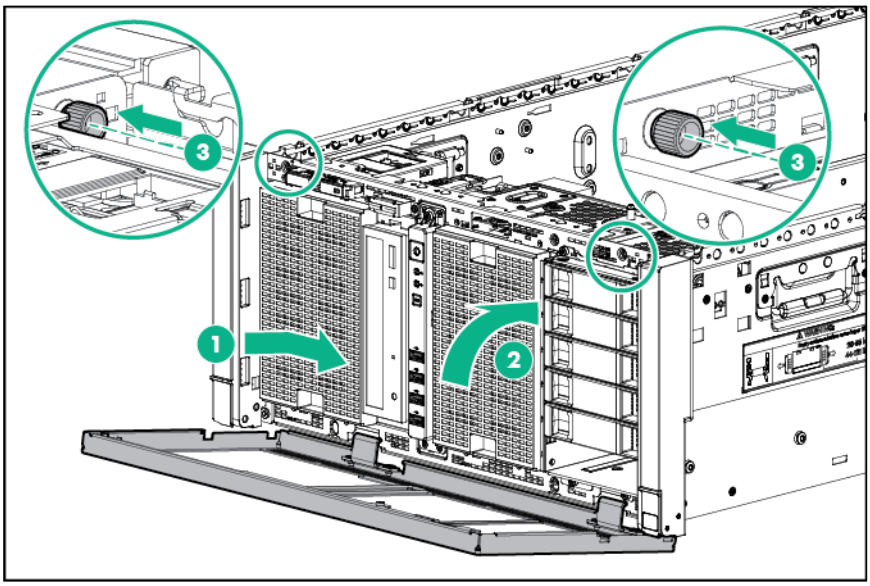

3. Install the access panel (on page 22).
4. Slide the server back into the rack.

Remove the access panel

WARNING: To reduce the risk of personal injury from hot surfaces, allow the drives and the internal system components to cool before touching them.

CAUTION: Do not operate the server for long periods with the access panel open or removed. Operating the server in this manner results in improper airflow and improper cooling that can lead to thermal damage.

To remove the component:

1. Do one of the following:
   - For tower models, open and remove the bezel ("Remove the tower bezel" on page 19).
   - For rack models, if installed, remove the security bezel (on page 19).
2. Power down the server (on page 18).
3. Remove all power:
   a. Disconnect each power cord from the power source.
   b. Disconnect each power cord from the server.
4. Do one of the following:
   - For tower models, place the server on a flat, level surface with the access panel facing up.
   - For rack models, extend the server from the rack (on page 22).
5. Open the locking latch, slide the access panel to the rear of the chassis, and then remove the access panel.

   If the locking latch is locked, use a T-15 Torx screwdriver to unlock it.

Install the access panel

1. Place the access panel on top of the server with the hood latch open. Allow the panel to extend past the rear of the server approximately 1.25 cm (0.5 inch).
2. Push down on the hood latch. The access panel slides to a closed position.
3. Use a T-15 Torx screwdriver to tighten the security screw on the hood latch.
4. Do one of the following:
   - For tower models, return the server to an upright position.
   - For rack models, slide the server back into the rack.
5. Connect each power cord to the server.
6. Connect each power cord to the power source.
7. Press the Power On/Standby button.

   The server exits standby mode and applies full power to the system. The system power LED changes from amber to green.

Extend the server from the rack

IMPORTANT: If the server is installed in a telco rack, remove the server from the rack to access internal components.

1. Pull down the quick release levers on each side of the server.
2. Extend the server from the rack.

WARNING: To reduce the risk of personal injury or equipment damage, be sure that the rack is adequately stabilized before extending a component from the rack.

WARNING: To reduce the risk of personal injury, be careful when pressing the server rail-release latches and sliding the server into the rack. The sliding rails could pinch your fingers.

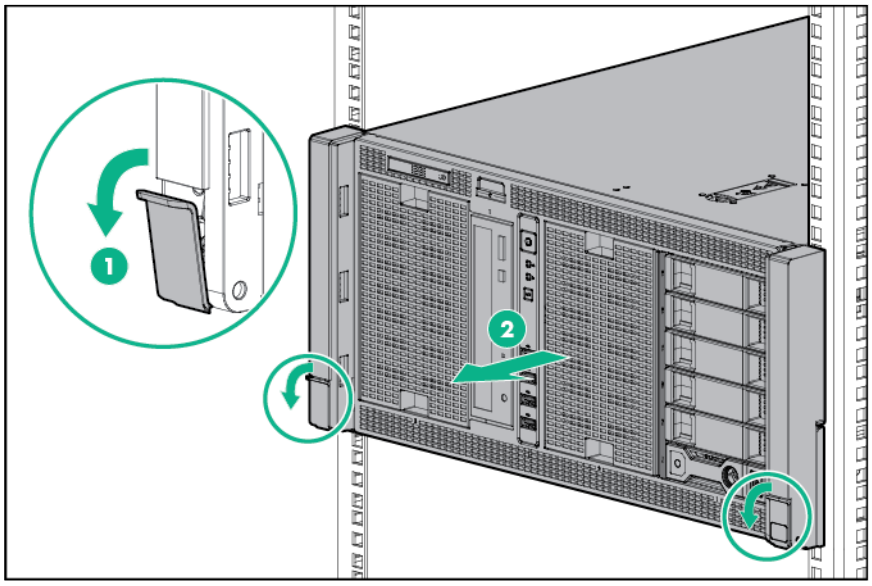

3. After performing the installation or maintenance procedure, slide the server back into the rack, and then press the server firmly into the rack to secure it in place.

> ⚠ **WARNING:** To reduce the risk of personal injury or equipment damage, be sure that the rack is adequately stabilized before extending a component from the rack.

Remove the air baffle

1. Do one of the following:
   - For tower models, open and remove the bezel ("Remove the tower bezel" on page 19).
   - For rack models, if installed, remove the security bezel (on page 19).
2. Power down the server (on page 18).
3. Remove all power:
   a. Disconnect each power cord from the power source.
   b. Disconnect each power cord from the server.
4. Do one of the following:
   - For tower models, place the server on a flat, level surface with the access panel facing up.
   - For rack models, extend the server from the rack (on page 22).
5. Remove the access panel (on page 21).

6. Remove the air baffle (on page 23).

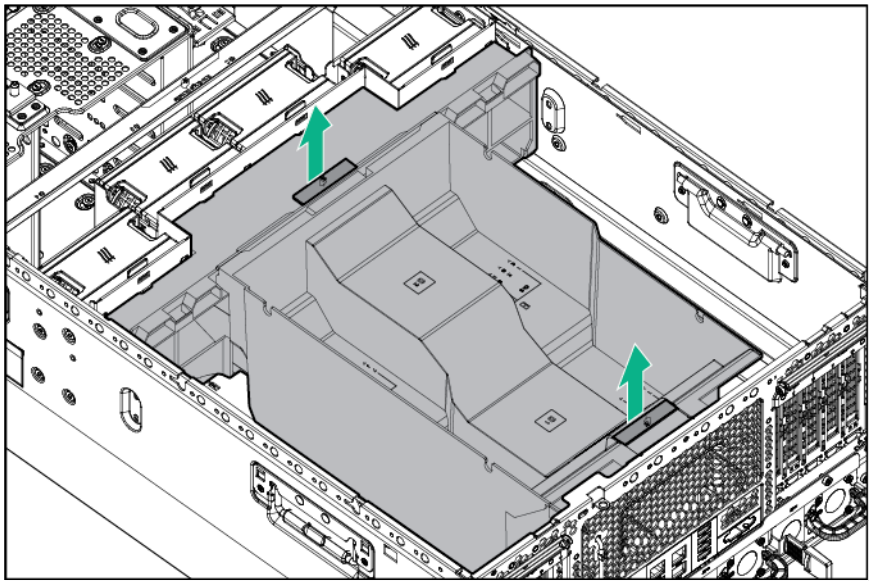

Install the air baffle

> **CAUTION:** For proper cooling, do not operate the server without the access panel, baffles, expansion slot covers, or blanks installed. If the server supports hot-plug components, minimize the amount of time the access panel is open.

1. Install the air baffle ("Remove the air baffle" on page 23).

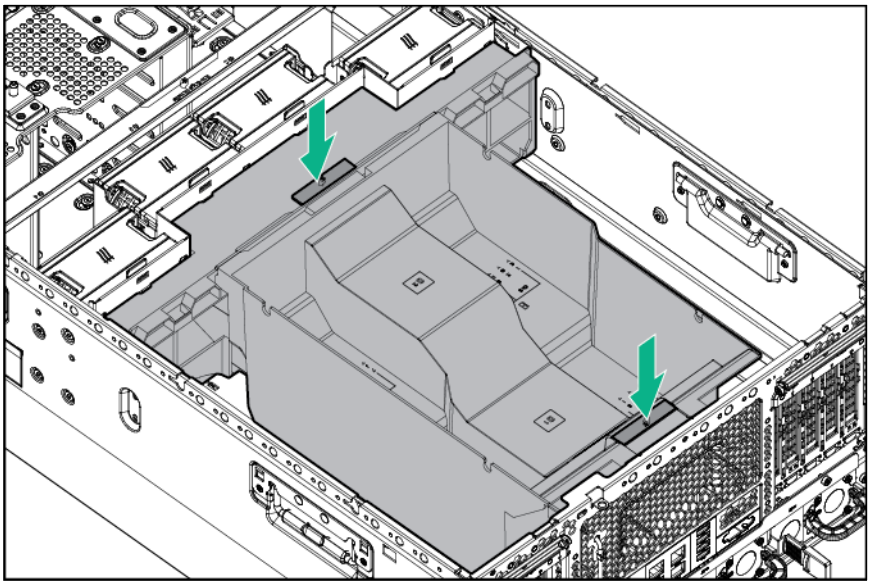

2. Install the access panel (on page 22).
3. Do one of the following:
   - For tower models, install the bezel.
   - For rack models, if removed, install the security bezel (on page 19).

Remove the fan

CAUTION: To prevent improper cooling and thermal damage, do not operate the server unless all bays are populated with either a component or a blank.

To remove the component:

1. Do one of the following:
   - For tower models, open and remove the bezel ("Remove the tower bezel" on page 19).
   - For rack models, if installed, remove the security bezel (on page 19).
2. Power down the server (on page 18).
3. Remove all power:
   a. Disconnect each power cord from the power source.
   b. Disconnect each power cord from the server.
4. Do one of the following:
   - For tower models, place the server on a flat, level surface with the access panel facing up.
   - For rack models, extend the server from the rack (on page 22).
   - Remove the access panel (on page 21).
5. Locate the fan to be removed.
6. Remove the fan.

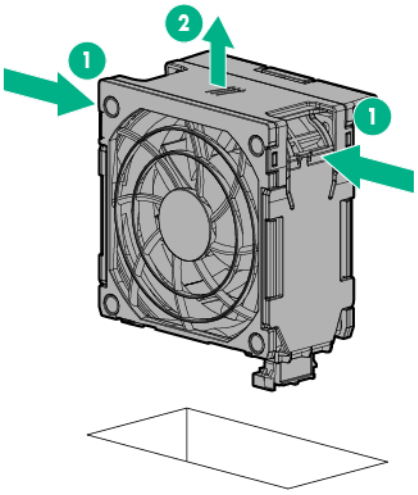

Remove the fan cage

IMPORTANT: When installing or replacing server components, one or more fans might need to be removed. To prevent an orderly or immediate server shutdown, Hewlett Packard Enterprise highly recommends powering down the server during these procedures. To determine if powering down is required, see the specific procedure.

To remove the component:

1. Do one of the following:
   - For tower models, open and remove the bezel ("Remove the tower bezel" on page 19).
   - For rack models, if installed, remove the security bezel (on page 19).
2. Power down the server (on page 18).
3. Remove all power:

a. Disconnect each power cord from the power source.
b. Disconnect each power cord from the server.

4. Do one of the following:
   - For tower models, place the server on a flat, level surface with the access panel facing up.
   - For rack models, extend the server from the rack (on page 22).
5. Remove the access panel (on page 21).
6. Remove the air baffle (on page 23).
7. Remove the fan cage.

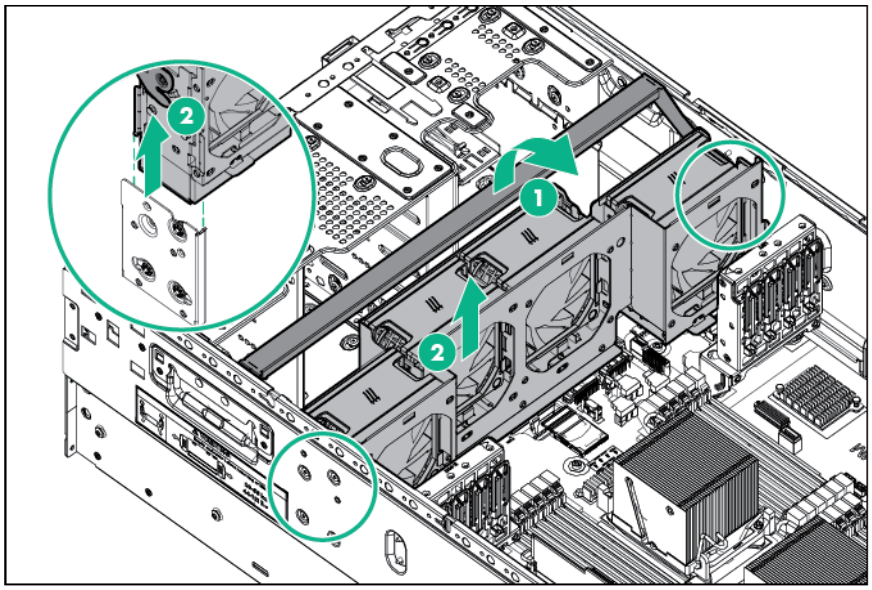

Remove the optical drive

The server supports both DVD-ROM and DVD-RW drives.

1. Do one of the following:
   - For tower models, open and remove the bezel ("Remove the tower bezel" on page 19).
   - For rack models, if installed, remove the security bezel (on page 19).
2. Power down the server (on page 18).
3. Remove all power:
   a. Disconnect each power cord from the power source.
   b. Disconnect each power cord from the server.
4. For tower models, do the following:
   a. Place the server on a flat, level surface with the access panel facing up.
   b. Remove the access panel (on page 21).
5. For rack models, do the following:
   a. Extend the server from the rack (on page 22).
   b. Remove the access panel (on page 21).
   c. Release thumbscrews and remove the rack bezel ("Remove the rack bezel" on page 20).
6. Remove the fan cage (on page 25).
7. Disconnect and remove the optical drive power and data cables.

8. Remove the optical drive.

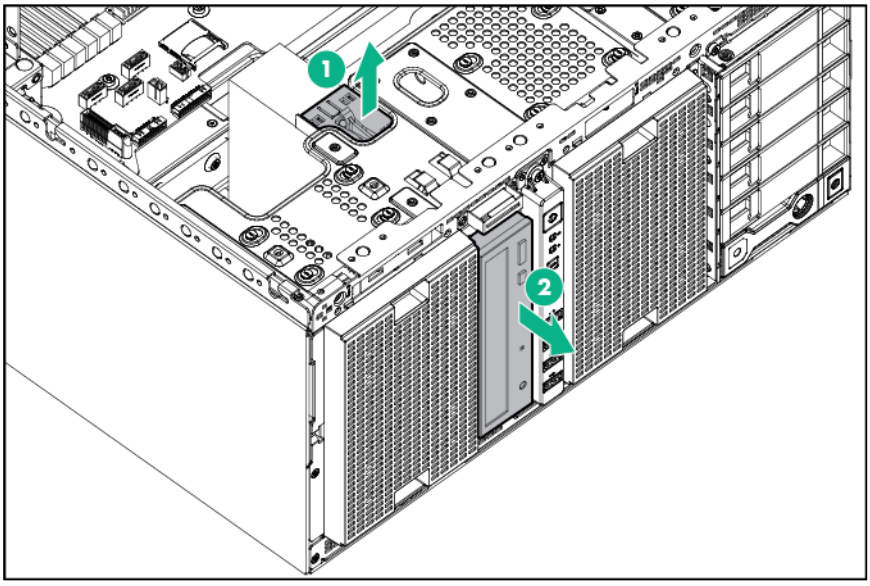

Remove the component drive cage blank

1. Do one of the following:
   - For tower models, open and remove the bezel ("Remove the tower bezel" on page 19).
   - For rack models, do the following:
   a. If installed, remove the security bezel (on page 19).
   b. Remove the access panel. ("Remove the access panel" on page 21)
   c. Release thumbscrews and remove the rack bezel. ("Remove the rack bezel" on page 20)
2. Remove the component drive cage blank.

⚠ **WARNING:** To reduce the risk of personal injury from an electrical hazard, do not remove more than one drive cage at a time.

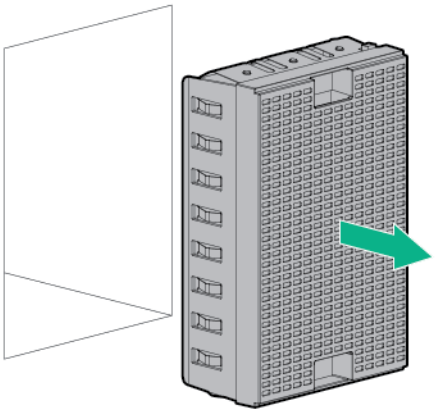

Setup

Optional services

Delivered by experienced, certified engineers, HPE support services help you keep your servers up and running with support packages tailored specifically for HPE ProLiant systems. HPE support services let you integrate both hardware and software support into a single package. A number of service level options are available to meet your business and IT needs.

HPE support services offer upgraded service levels to expand the standard product warranty with easy-to-buy, easy-to-use support packages that will help you make the most of your server investments. Some of the HPE support services for hardware, software or both are:

- Foundation Care – Keep systems running.
  - 6-Hour Call-to-Repair
  - 4-Hour 24x7
  - Next Business Day
- Proactive Care – Help prevent service incidents and get you to technical experts when there is one.
  - 6-Hour Call-to-Repair
  - 4-Hour 24x7
  - Next Business Day
- Startup and implementation services for both hardware and software
- HPE Education Services – Help train your IT staff.

For more information on HPE support services, see the Hewlett Packard Enterprise website (http://www.hpe.com/services).

Rack planning resources

The rack resource kit ships with all HPE Intelligent Series racks. For more information on the content of each resource, see the rack resource kit documentation.

Optimum environment

When installing the server, select a location that meets the environmental standards described in this section.

Space and airflow requirements

Tower server

In a tower configuration, leave at least a 7.6-cm (3-in) clearance space at the front and back of the server for proper ventilation.

Rack server

To allow for servicing and adequate airflow, observe the following space and airflow requirements when deciding where to install a rack:

- Leave a minimum clearance of 63.5 cm (25 in) in front of the rack.

- Leave a minimum clearance of 76.2 cm (30 in) behind the rack.
- Leave a minimum clearance of 121.9 cm (48 in) from the back of the rack to the back of another rack or row of racks.

Hewlett Packard Enterprise servers draw in cool air through the front door and expel warm air through the rear door. Therefore, the front and rear rack doors must be adequately ventilated to allow ambient room air to enter the cabinet, and the rear door must be adequately ventilated to allow the warm air to escape from the cabinet.

△ **CAUTION:** To prevent improper cooling and damage to the equipment, do not block the ventilation openings.

When vertical space in the rack is not filled by a server or rack component, the gaps between the components cause changes in airflow through the rack and across the servers. Cover all gaps with blanking panels to maintain proper airflow.

△ **CAUTION:** Always use blanking panels to fill empty vertical spaces in the rack. This arrangement ensures proper airflow. Using a rack without blanking panels results in improper cooling that can lead to thermal damage.

The 9000 and 10000 Series Racks provide proper server cooling from flow-through perforations in the front and rear doors that provide 64 percent open area for ventilation.

△ **CAUTION:** When using a Compaq branded 7000 series rack, install the high airflow rack door insert (PN 327281-B21 for 42U rack, PN 157847-B21 for 22U rack) to provide proper front-to-back airflow and cooling.

△ **CAUTION:** If a third-party rack is used, observe the following additional requirements to ensure adequate airflow and to prevent damage to the equipment:

- Front and rear doors—If the 42U rack includes closing front and rear doors, you must allow 5,350 sq cm (830 sq in) of holes evenly distributed from top to bottom to permit adequate airflow (equivalent to the required 64 percent open area for ventilation).
- Side—The clearance between the installed rack component and the side panels of the rack must be a minimum of 7 cm (2.75 in).

Temperature requirements

To ensure continued safe and reliable equipment operation, install or position the system in a well-ventilated, climate-controlled environment.

The maximum recommended ambient operating temperature (TMRA) for most server products is 35°C (95°F). The temperature in the room where the rack is located must not exceed 35°C (95°F).

△ **CAUTION:** To reduce the risk of damage to the equipment when installing third-party options:

- Do not permit optional equipment to impede airflow around the server or to increase the internal rack temperature beyond the maximum allowable limits.
- Do not exceed the manufacturer's TMRA.

Power requirements

Installation of this equipment must comply with local and regional electrical regulations governing the installation of information technology equipment by licensed electricians. This equipment is designed to operate in installations covered by NFPA 70, 1999 Edition (National Electric Code) and NFPA-75, 1992 (code for Protection of Electronic Computer/Data Processing Equipment). For electrical power ratings on options, refer to the product rating label or the user documentation supplied with that option.

⚠ **WARNING:** To reduce the risk of personal injury, fire, or damage to the equipment, do not overload the AC supply branch circuit that provides power to the rack. Consult the electrical authority having jurisdiction over wiring and installation requirements of your facility.

△ **CAUTION:** Protect the server from power fluctuations and temporary interruptions with a regulating uninterruptible power supply. This device protects the hardware from damage caused by power surges and voltage spikes and keeps the system in operation during a power failure.

When installing more than one server, you may need to use additional power distribution devices to safely provide power to all devices. Observe the following guidelines:

- Balance the server power load between available AC supply branch circuits.
- Do not allow the overall system AC current load to exceed 80% of the branch circuit AC current rating.
- Do not use common power outlet strips for this equipment.
- Provide a separate electrical circuit for the server.

Electrical grounding requirements

The server must be grounded properly for proper operation and safety. In the United States, you must install the equipment in accordance with NFPA 70, 1999 Edition (National Electric Code), Article 250, as well as any local and regional building codes. In Canada, you must install the equipment in accordance with Canadian Standards Association, CSA C22.1, Canadian Electrical Code. In all other countries, you must install the equipment in accordance with any regional or national electrical wiring codes, such as the International Electrotechnical Commission (IEC) Code 364, parts 1 through 7. Furthermore, you must be sure that all power distribution devices used in the installation, such as branch wiring and receptacles, are listed or certified grounding-type devices.

Because of the high ground-leakage currents associated with multiple servers connected to the same power source, Hewlett Packard Enterprise recommends the use of a PDU that is either permanently wired to the building's branch circuit or includes a nondetachable cord that is wired to an industrial-style plug. NEMA locking-style plugs or those complying with IEC 60309 are considered suitable for this purpose. Using common power outlet strips for the server is not recommended.

Rack warnings

⚠ **WARNING:** To reduce the risk of personal injury or damage to the equipment, be sure that:

- The leveling jacks are extended to the floor.
- The full weight of the rack rests on the leveling jacks.
- The stabilizing feet are attached to the rack if it is a single-rack installation.
- The racks are coupled together in multiple-rack installations.
- Only one component is extended at a time. A rack may become unstable if more than one component is extended for any reason.

⚠ **WARNING:** To reduce the risk of personal injury or equipment damage when unloading a rack:

- At least two people are needed to safely unload the rack from the pallet. An empty 42U rack can weigh as much as 115 kg (253 lb), can stand more than 2.1 m (7 ft) tall, and might become unstable when being moved on its casters.
- Never stand in front of the rack when it is rolling down the ramp from the pallet. Always handle the rack from both sides.

⚠ **WARNING:** When installing a server in a telco rack, be sure that the rack frame is adequately secured to the top and bottom of the building structure.

Server warnings and cautions

⚠ **WARNING:** This server is very heavy. To reduce the risk of personal injury or damage to the equipment:

- Observe local occupational health and safety requirements and guidelines for manual material handling.
- Get help to lift and stabilize the product during installation or removal, especially when the product is not fastened to the rails. Hewlett Packard Enterprise recommends that a minimum of two people are required for all rack server installations. A third person may be required to help align the server if the server is installed higher than chest level.
- Use caution when installing the server in or removing the server from the rack; it is unstable when not fastened to the rails.

⚠ **WARNING:** To reduce the risk of personal injury from hot surfaces, allow the drives and the internal system components to cool before touching them.

⚠ **WARNING:** To reduce the risk of personal injury, electric shock, or damage to the equipment, remove the power cord to remove power from the server. The front panel Power On/Standby button does not completely shut off system power. Portions of the power supply and some internal circuitry remain active until AC power is removed.

△ **CAUTION:** Protect the server from power fluctuations and temporary interruptions with a regulating uninterruptible power supply. This device protects the hardware from damage caused by power surges and voltage spikes and keeps the system in operation during a power failure.

△ **CAUTION:** Do not operate the server for long periods with the access panel open or removed. Operating the server in this manner results in improper airflow and improper cooling that can lead to thermal damage.

Identifying tower server shipping carton contents

Unpack the server shipping carton and locate the materials and documentation necessary for installing the server.

The contents of the server shipping carton include:

- Server
- Power cord
- Keyboard
- Mouse
- Tower feet
- Hardware documentation, Documentation CD, and software products

In addition to the supplied items, you might need:

- Hardware options
- Operating system or application software

- PDU

Installing hardware options

Install any hardware options before initializing the server. For options installation information, refer to the option documentation. For server-specific information, refer to "Hardware options installation (on page 41)."

Setting up a tower server

Follow the steps in this section to set up a tower model server. If you are going to install the server into a rack, see the rack installation section.

1. Lay the server on the side, and then install the feet.

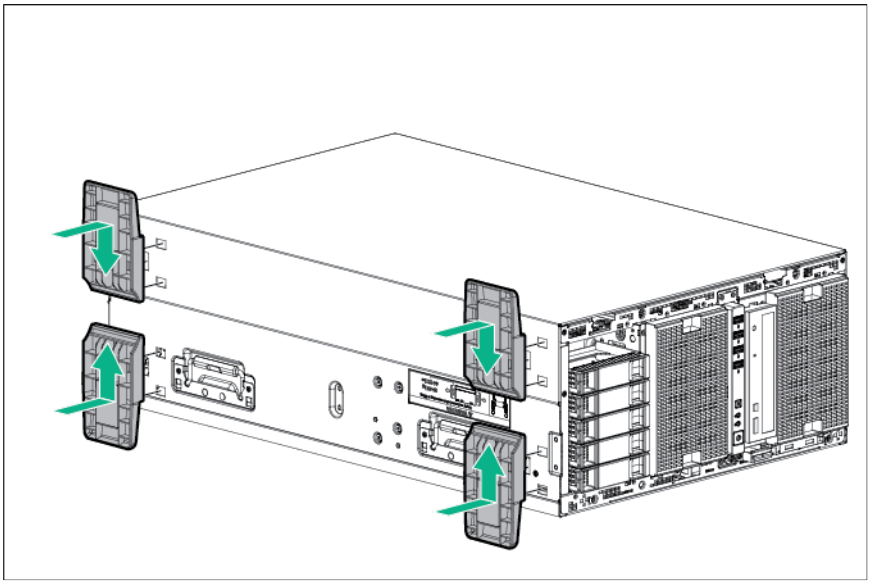

2. Return the server to an upright position.
3. Connect peripheral devices to the server.

> ⚠ **WARNING:** To reduce the risk of electric shock, fire, or damage to the equipment, do not plug telephone or telecommunications connectors into RJ-45 connectors.

4. Connect the power cord to the rear of the server.
5. Connect the power cord to the AC power source.

> ⚠ **WARNING:** To reduce the risk of electric shock or damage to the equipment:
> - Do not disable the power cord grounding plug. The grounding plug is an important safety feature.
> - Plug the power cord into a grounded (earthed) electrical outlet that is easily accessible at all times.
> - Unplug the power cord from the power supply to disconnect power to the equipment.
> - Do not route the power cord where it can be walked on or pinched by items placed against it. Pay particular attention to the plug, electrical outlet, and the point where the cord extends from the server.

Installing the server into the rack

1. Back up the server data, and then record configuration information.
2. Close all applications, and then shut down the OS, using the normal shutdown sequence.
3. If necessary, power off the server by pressing the power button on the front of the server.
4. Disconnect all AC power cords from the AC outlets, and then disconnect all AC power cords from the server.
5. Unlock and remove the tower bezel from the chassis, and then remove the standoffs.

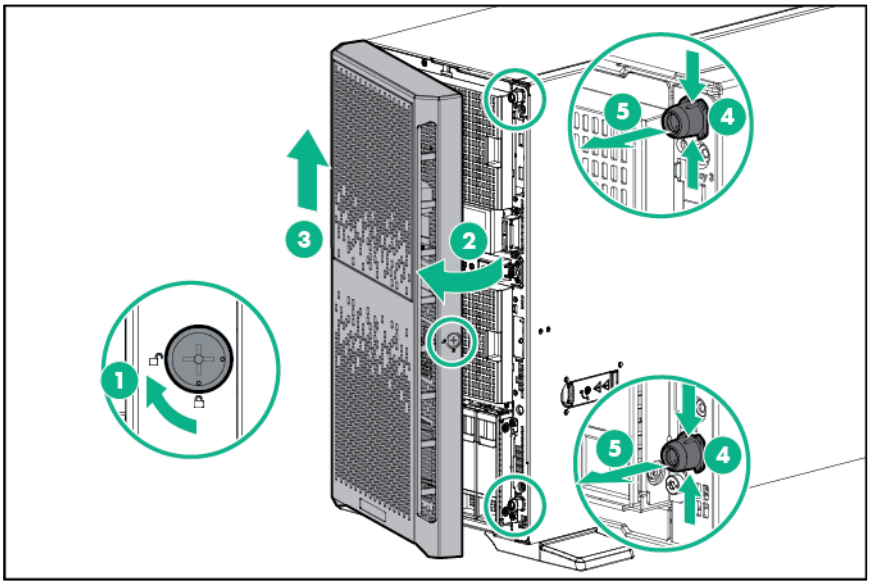

6. Place the server on a flat, level work surface.
7. Remove the server base feet.

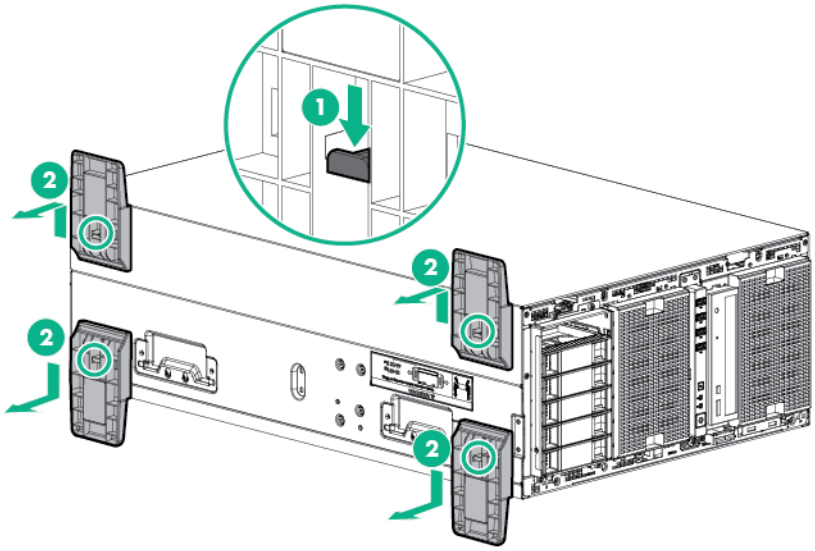

8. Remove all screws securing the base cover to the chassis.

9. Place two Torx screwdrivers in the bezel hinge holes to help slide the base cover towards the rear of the server, and then remove the base cover.

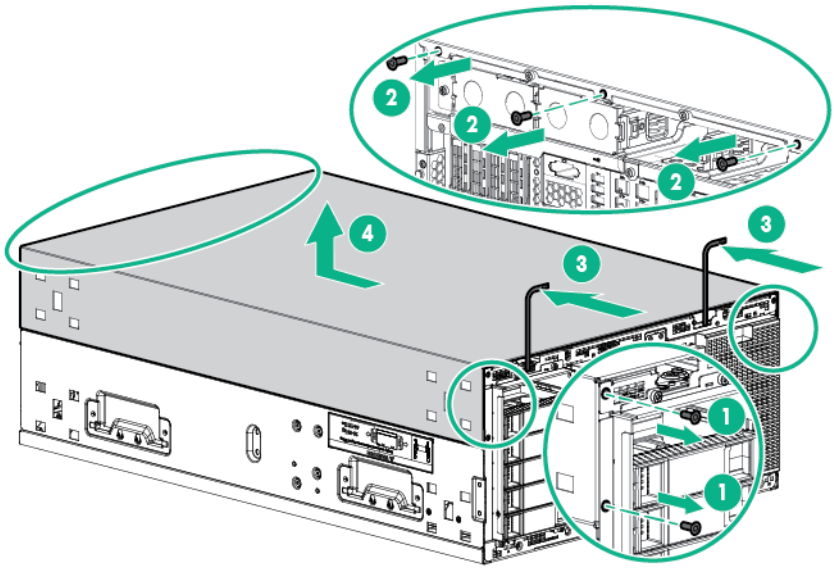

10. Install the server base blank covers over the server base feet holes.

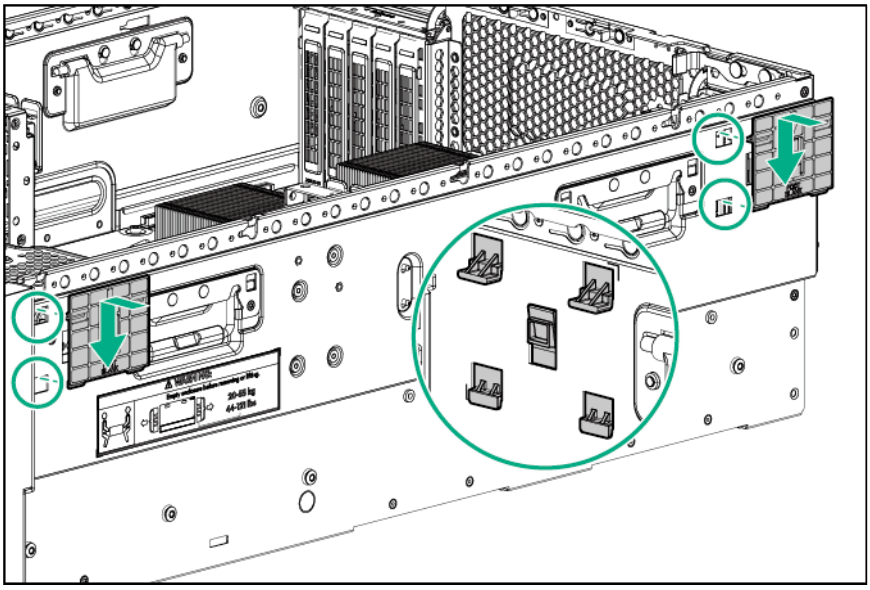

11. Turn the server over, and then remove the access panel ("Remove the access panel" on page 21).

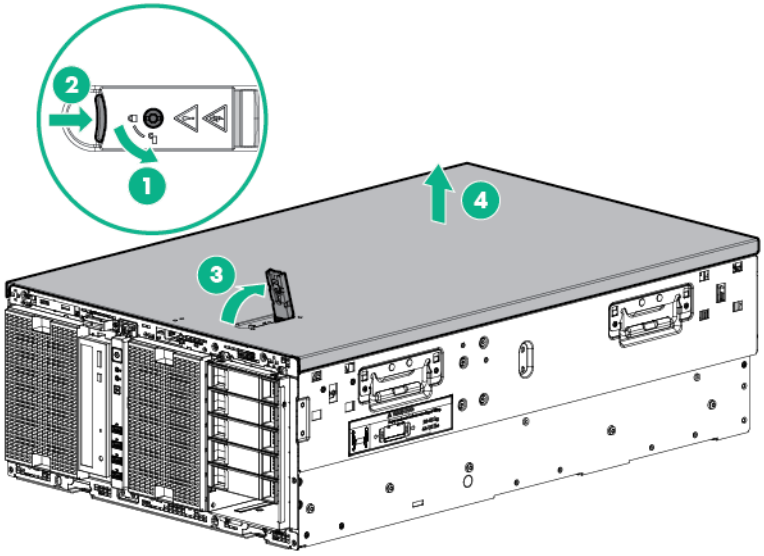

12. Remove the air baffle (on page 23).

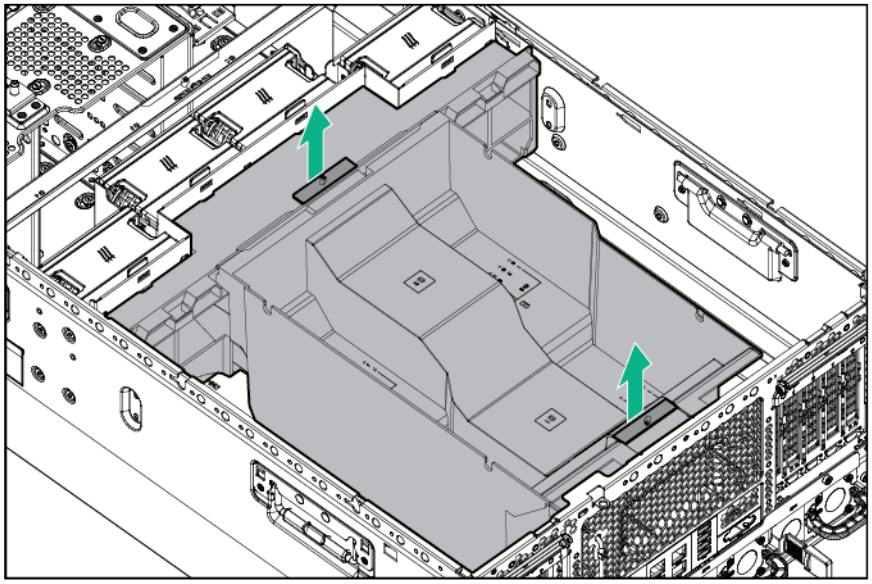

13. Remove the fan cage (on page 25).

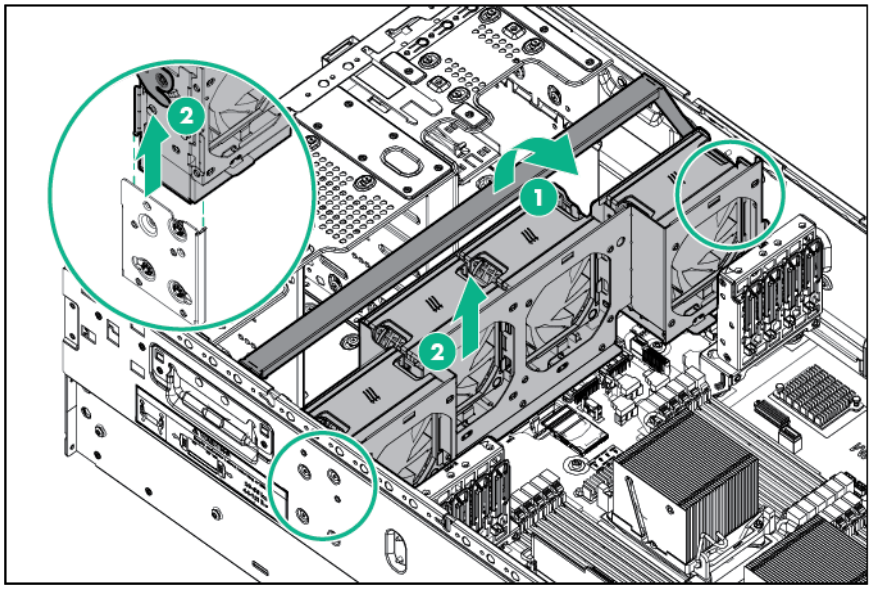

14. Remove the knock-out bracket, install the System Insight Display module, and then route the cable.

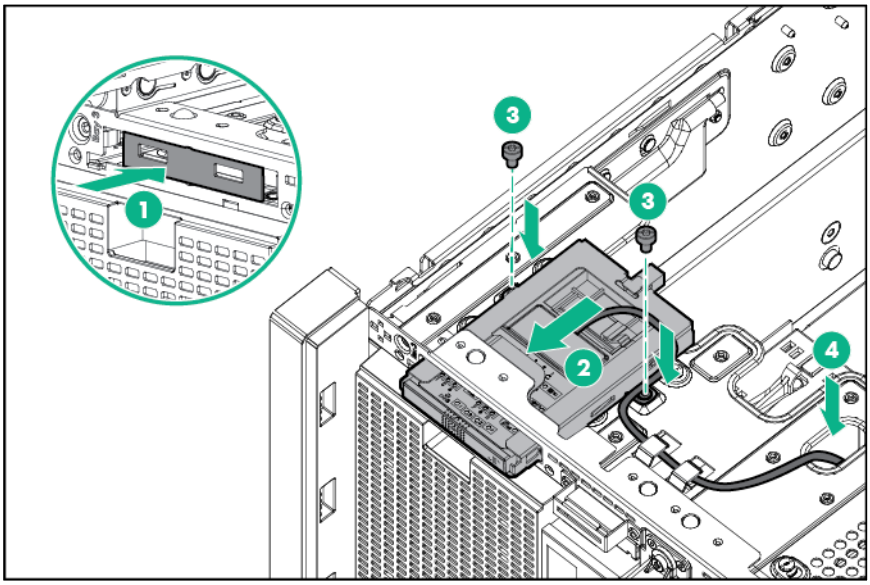

15. Connect the cable from the System Insight Display module to the front input/output cable.

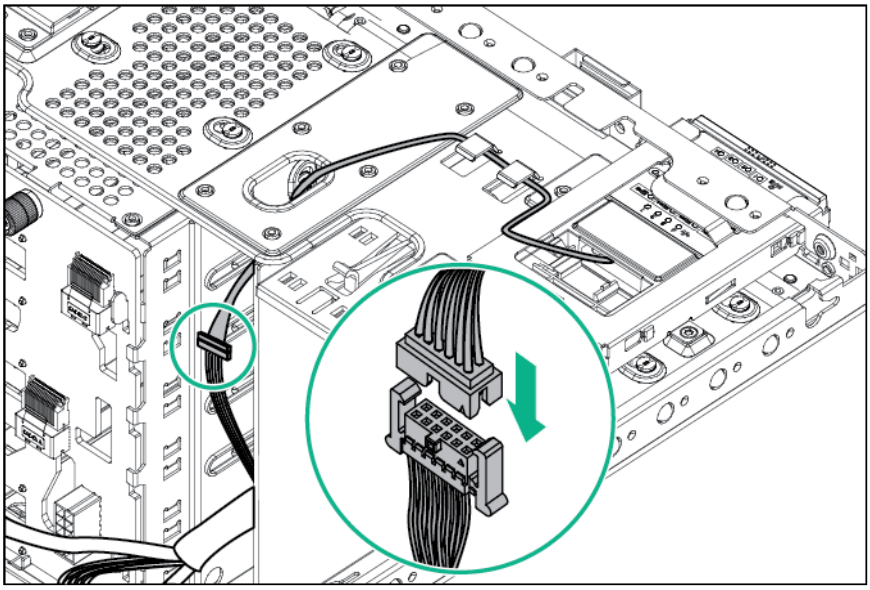

16. Remove the blank or cage installed in component box 3.
17. Install the left and right rack bezels ears with T-10 and T-15 screws.

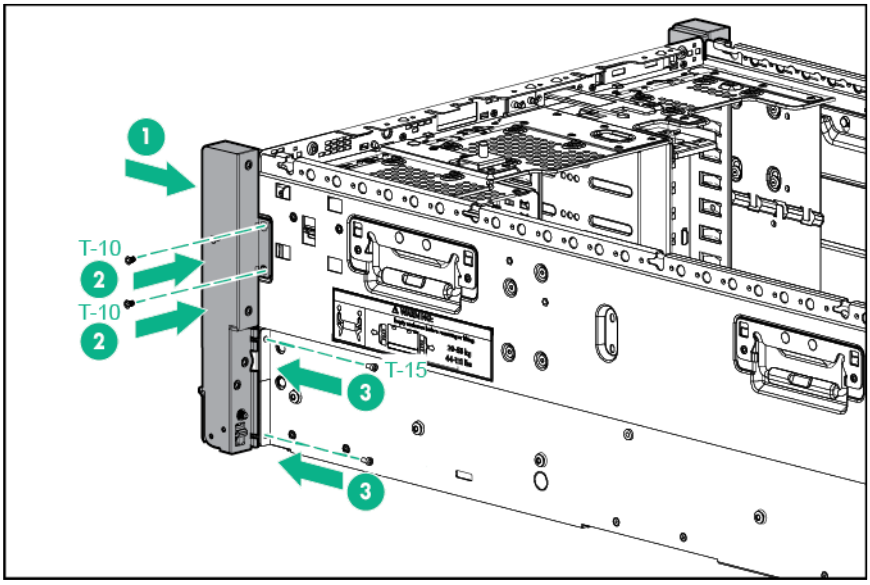

18. Route the discovery service cable from the left rack bezel ear through the chassis hooks.

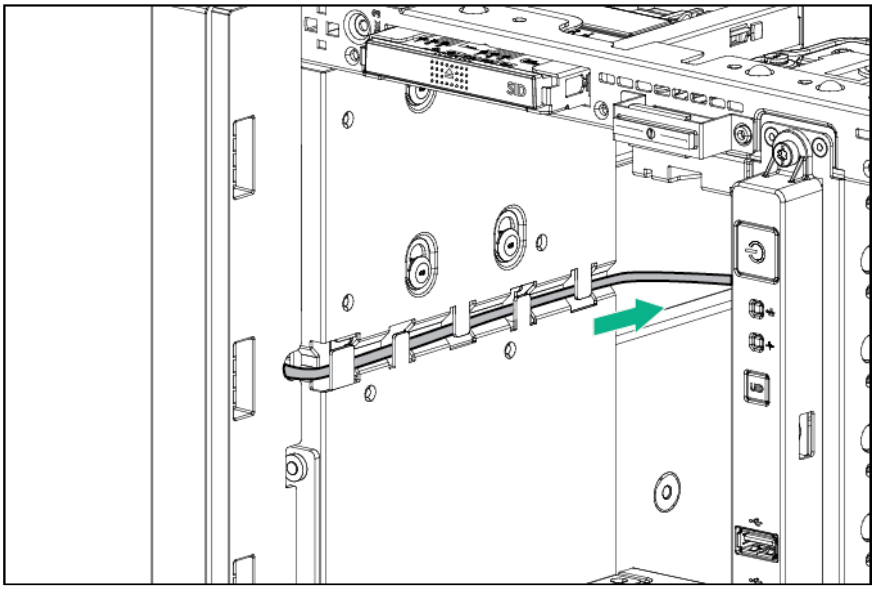

19. Connect the discovery service cable to the discovery service cable connector.

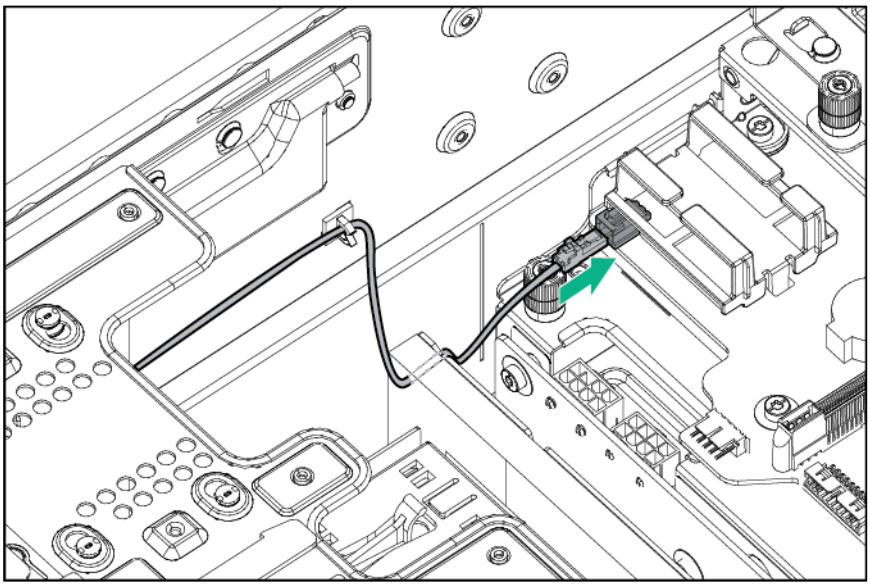

20. Install the blank or cage removed from component box 3.

21. Install and lock the rack bezel ("Install the rack bezel" on page 21).

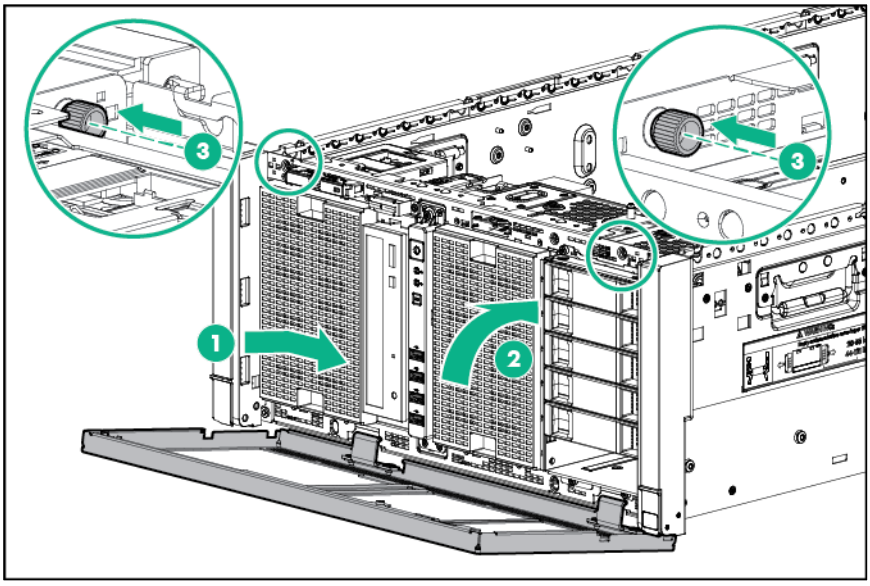

22. Install the fan cage.
23. Install the air baffle (on page 24).
24. Install the access panel (on page 22).

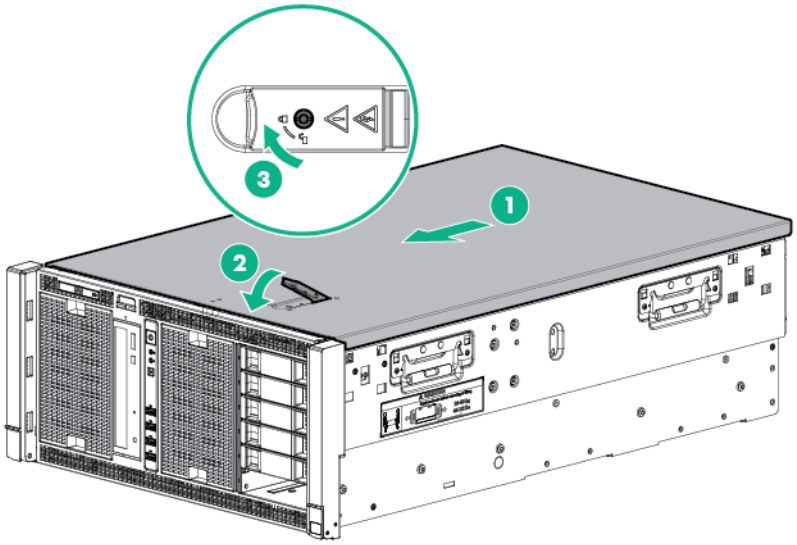

25. Install the server on the rack rail, and then slide the assembly into the rack.

NOTE: For detailed instructions on installing the server into the rack, see the Quick Deploy Rail System Installation Instructions included with the kit.

Powering up and configuring the server

To power up the server:

1. Connect each power cord to the server.
2. Connect each power cord to the power source.
3. Press the Power On/Standby button.

The server exits standby mode and applies full power to the system. The system power LED changes from amber to green.

While the server boots, ORCA utility and the RBSU are automatically configured to prepare the server for operating system installation.

To configure these utilities manually:

- To configure the array controller using ORCA, press the **F8** key when prompted during the array controller initialization.
- To change the server settings using RBSU, press the **F9** key when prompted during the boot process. The system is set up by default for the English language.

For more information on the automatic configuration, see the *ROM-Based Setup Utility User Guide* located on the Documentation CD.

Installing the operating system

This ProLiant server does not ship with provisioning media. Everything needed to manage and install the system software and firmware is preloaded on the server.

To operate properly, the server must have a supported operating system. For the latest information on operating system support, see the Hewlett Packard Enterprise website (http://www.hpe.com/info/supportos).

To install an operating system on the server, use one of the following methods:

- Intelligent Provisioning—The iLO Management Engine is a new feature on ProLiant servers that contains Intelligent Provisioning for embedded deployment, updating, and provisioning capabilities. Intelligent Provisioning can configure the server and install an operating system, eliminating the need for SmartStart CDs and Smart Update Firmware DVDs.

  To install an operating system on the server with Intelligent Provisioning (local or remote):

  a. Connect the Ethernet cable between the network connector on the server and a network jack.
  b. Press the Power On/Standby button.
  c. During server POST, press the **F10** key.
  d. Complete the initial Preferences and Registration portion of Intelligent Provisioning (on page 107).
  e. At the 1 Start screen, click the **Configure and Install** button.
  f. To finish the installation, follow the onscreen prompts. An Internet connection is required to update the firmware and systems software.
- Remote deployment installation—To deploy an operating system remotely, use Insight Control server deployment for an automated solution.

For additional system software and firmware updates, download the Service Pack for ProLiant from the Hewlett Packard Enterprise website (http://www.hpe.com/servers/spp/download). Software and firmware must be updated before using the server for the first time, unless any installed software or components require an older version. For more information, see "Keeping the system current (on page 113)."

For more information on using these installation methods, see the Hewlett Packard Enterprise website (http://www.hpe.com/info/ilo).

Registering the server

To register the server, contact the regional support center.

Hardware options installation

Introduction

If more than one option is being installed, read the installation instructions for all the hardware options and identify similar steps to streamline the installation process.

⚠ **WARNING:** To reduce the risk of personal injury from hot surfaces, allow the drives and the internal system components to cool before touching them.

△ **CAUTION:** To prevent damage to electrical components, properly ground the server before beginning any installation procedure. Improper grounding can cause electrostatic discharge.

Mini-SAS cable option

To install the component:

1. Do one of the following:
   - For tower models, open and remove the bezel ("Remove the tower bezel" on page 19).
   - For rack models, if installed, remove the security bezel (on page 19).
2. Power down the server (on page 18).
3. Remove all power:
   a. Disconnect each power cord from the power source.
   b. Disconnect each power cord from the server.
4. Do one of the following:
   - For tower models, place the server on a flat, level surface with the access panel facing up.
   - For rack models, extend the server from the rack (on page 22).
5. Remove the access panel.
6. Remove the air baffle (on page 23).
7. Remove the fan cage.
8. Install the Smart Array controller.
9. Connect the common end of the Mini-SAS Y-cable to the controller option.
10. Route the two ends of the Mini-SAS Y-cable through the cable management clips, and then connect them to the drive backplane.

- Cable routing to box 1

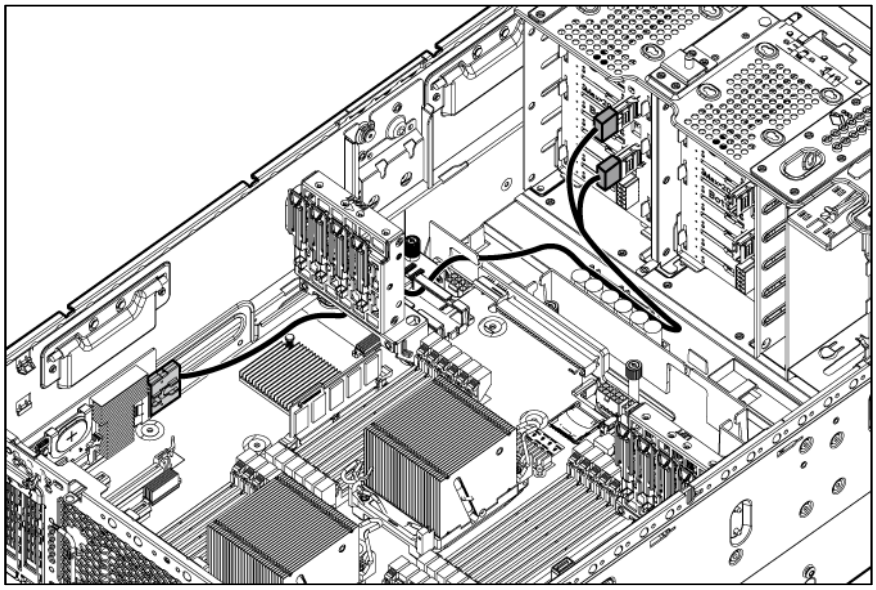

- Cable routing to box 2

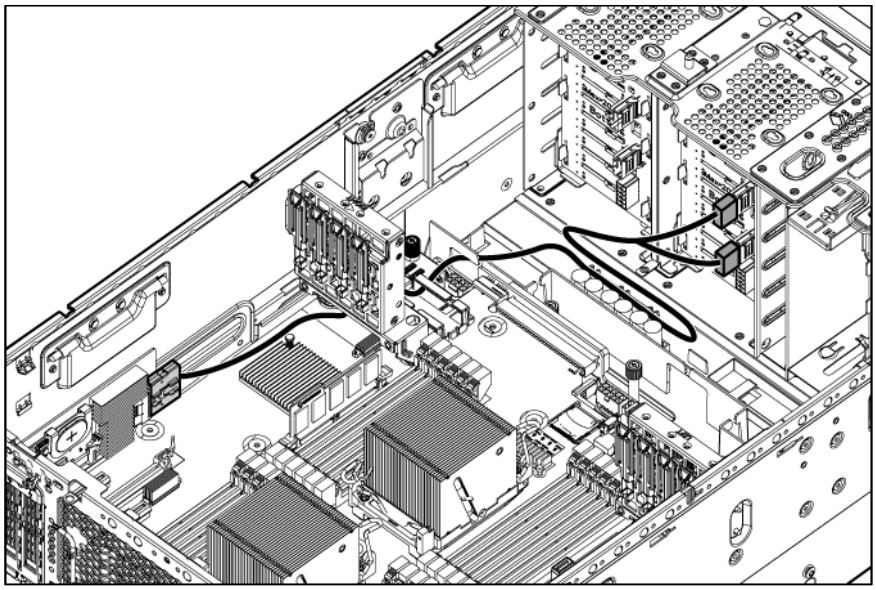

- Cable routing to box 3

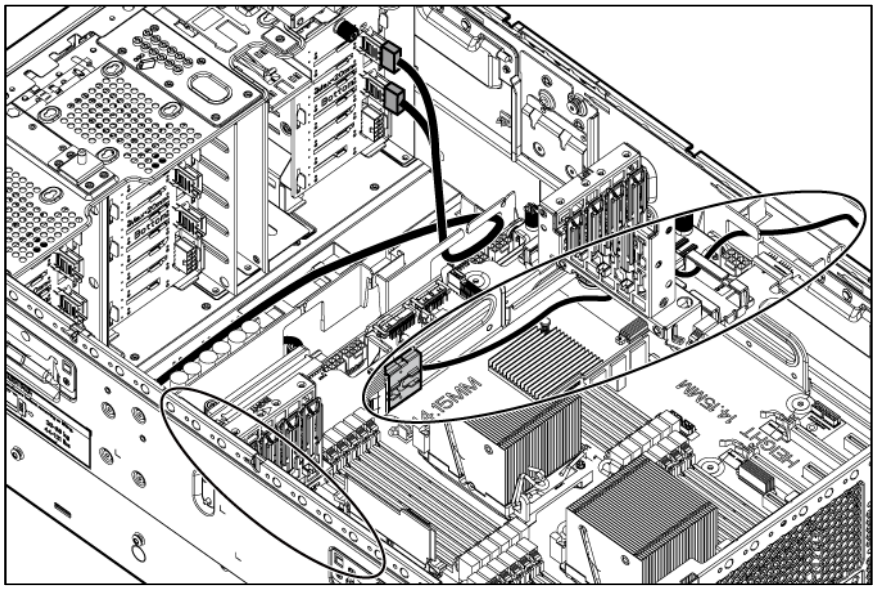

11. Install the fan cage.
12. Install the air baffle (on page 24).
13. For tower models, do the following:
    a. Install the access panel (on page 22).
    b. Return the server to an upright position.
14. For rack models, do the following:
    a. Install the access panel (on page 22).
    b. Slide the server into the rack.
15. Connect each power cord to the server.
16. Connect each power cord to the power source.
17. Press the Power On/Standby button.

    The server exits standby mode and applies full power to the system. The system power LED changes from amber to green.
18. Do one of the following:
    - For tower models, install the bezel.
    - For rack models, if removed, install the security bezel (on page 19).

Second processor option

The server supports single-processor and dual-processor operation.

When processor 2 is installed, fan 1 must also be installed.

CAUTION: To avoid damage to the processor and system board, only authorized personnel should attempt to replace or install the processor in this server.

CAUTION: To prevent possible server malfunction and damage to the equipment, multiprocessor configurations must contain processors with the same part number.

IMPORTANT: If installing a processor with a faster speed, update the system ROM before installing the processor.

To install a processor:

1. Do one of the following:
   - For tower models, open and remove the bezel ("Remove the tower bezel" on page 19).
   - For rack models, if installed, remove the security bezel (on page 19).
2. Power down the server (on page 18).
3. Remove all power:
   a. Disconnect each power cord from the power source.
   b. Disconnect each power cord from the server.
4. Do one of the following:
   - For tower models, place the server on a flat, level surface with the access panel facing up.
   - For rack models, extend the server from the rack (on page 22).
5. Remove the access panel (on page 21).
6. Remove the air baffle (on page 23).
7. Open each of the processor locking levers in the order indicated, and then open the processor retaining bracket.

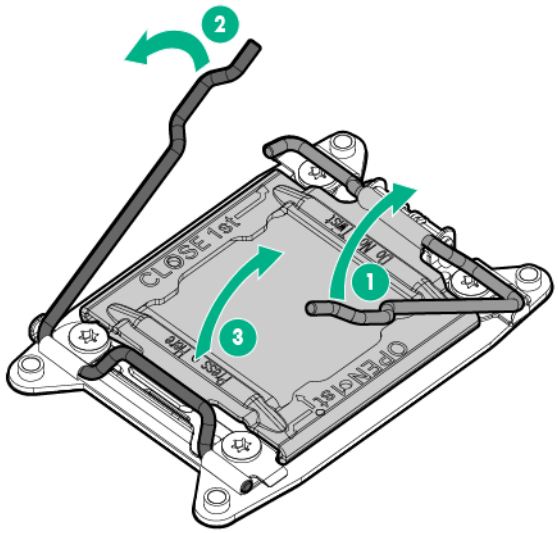

8. Remove the clear processor socket cover. Retain the processor socket cover for future use.

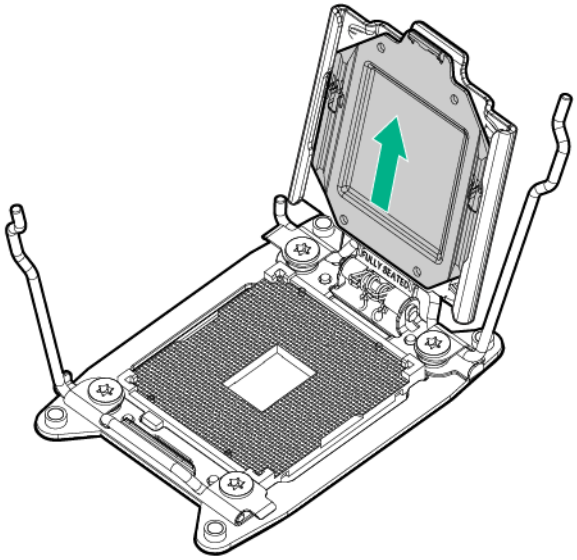

9. Install the processor. Verify that the processor is fully seated in the processor retaining bracket by visually inspecting the processor installation guides on either side of the processor. **THE PINS ON THE SYSTEM BOARD ARE VERY FRAGILE AND EASILY DAMAGED.**

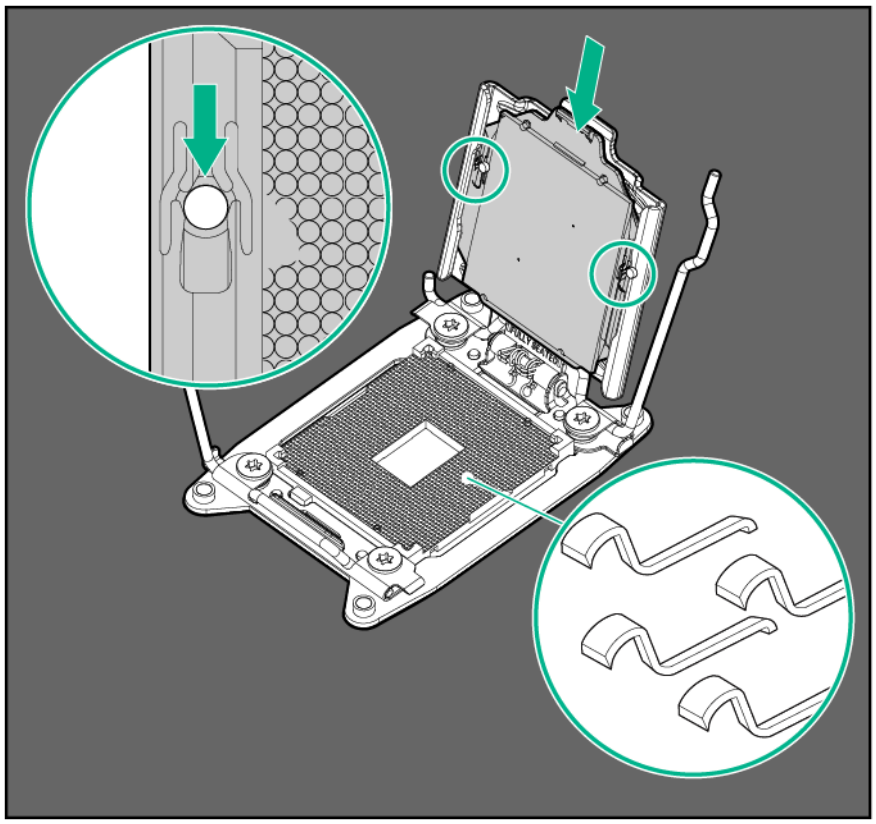

△ **CAUTION: THE PINS ON THE SYSTEM BOARD ARE VERY FRAGILE AND EASILY DAMAGED.** To avoid damage to the system board, do not touch the processor or the processor socket contacts.

10. Close the processor retaining bracket. When the processor is installed properly inside the processor retaining bracket, the processor retaining bracket clears the flange on the front of the socket.

△ **CAUTION:** Do not press down on the processor. Pressing down on the processor may cause damage to the processor socket and the system board. Press only in the area indicated on the processor retaining bracket.

11. Press and hold the processor retaining bracket in place, and then close each processor locking lever. Press only in the area indicated on the processor retaining bracket.

△ **CAUTION:** Close and hold down the processor cover socket while closing the processor locking levers. The levers should close without resistance. Forcing the levers closed can damage the processor and socket, requiring system board replacement.

12. Open the heatsink retaining levers.

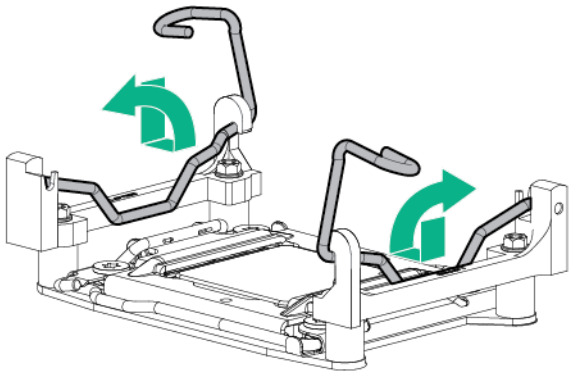

△ **CAUTION:** The pins on the processor socket are very fragile. Any damage to them may require replacing the system board.

△ **CAUTION:** Failure to completely open the processor locking lever prevents the processor from seating during installation, leading to hardware damage.

13. Remove the heatsink cover.

△ **CAUTION:** After the cover is removed, do not touch the thermal interface media.

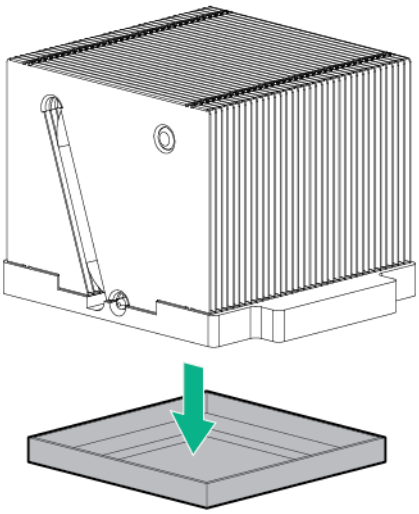

14. Install the heatsink, and then close the heatsink retaining levers.

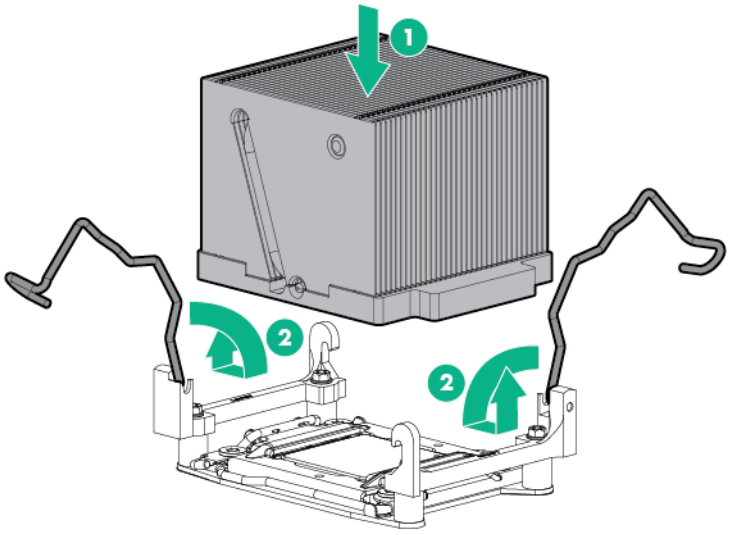

15. Install the air baffle (on page 24).

16. Remove the fan blank.

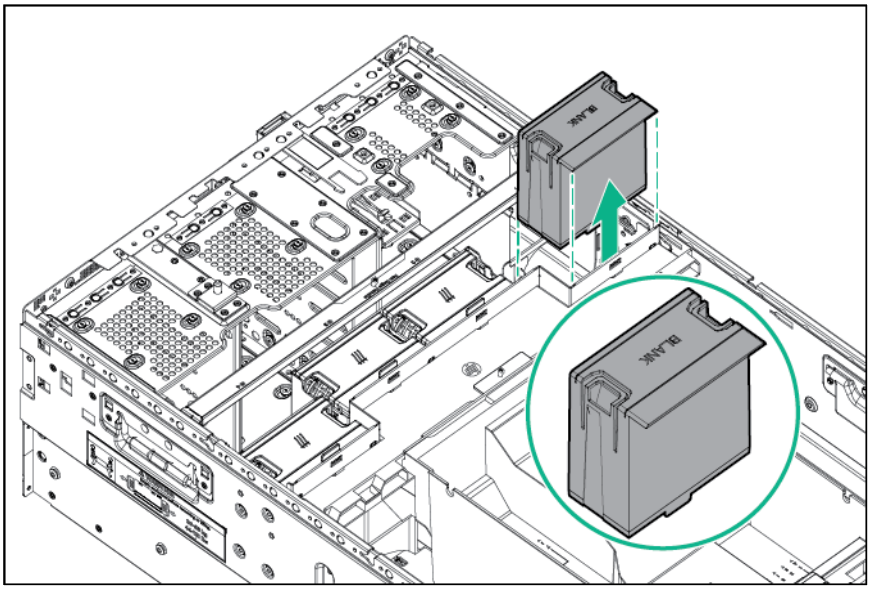

17. Install the fan, making sure that the fan clicks into place.

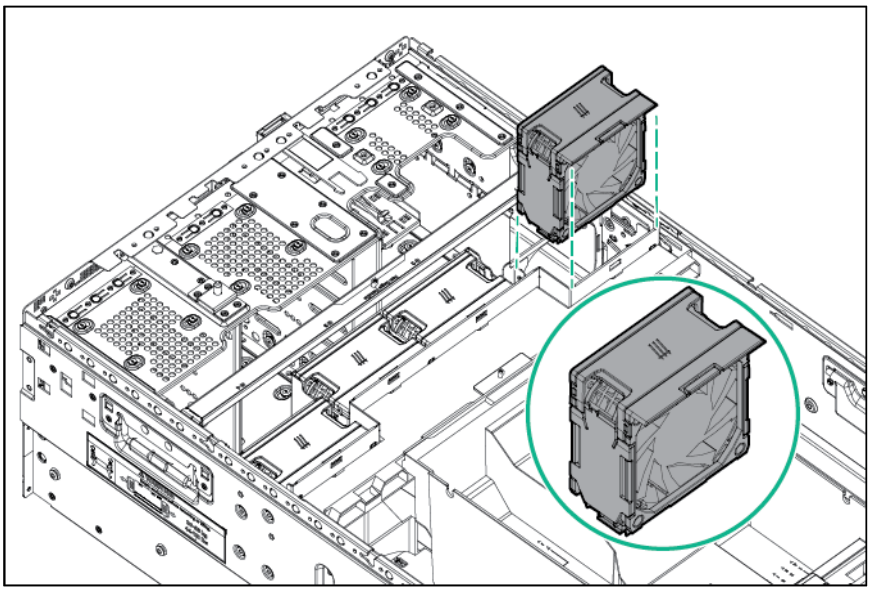

18. Install the access panel (on page 22).
19. Do one of the following:
    - For tower models, return the server to an upright position.
    - For rack models, slide the server back into the rack.
20. Connect each power cord to the server.
21. Connect each power cord to the power source.
22. Press the Power On/Standby button.

    The server exits standby mode and applies full power to the system. The system power LED changes from amber to green.
23. Do one of the following:
    - For tower models, install the bezel.
    - For rack models, if removed, install the security bezel (on page 19).

Processor upgrade

WARNING: To reduce the risk of personal injury from hot surfaces, allow the drives and the internal system components to cool before touching them.

CAUTION: To prevent possible server malfunction and damage to the equipment, multiprocessor configurations must contain processors with the same part number.

CAUTION: The heatsink thermal interface media is not reusable and must be replaced if the heatsink is removed from the processor after it has been installed.

IMPORTANT: Processor socket 1 must be populated at all times or the server does not function.

To remove the component:

1. Do one of the following:
   - For tower models, open and remove the bezel ("Remove the tower bezel" on page 19).
   - For rack models, if installed, remove the security bezel (on page 19).
2. Power down the server (on page 18).
3. Remove all power:
   a. Disconnect each power cord from the power source.
   b. Disconnect each power cord from the server.
4. Do one of the following:
   - For tower models, place the server on a flat, level surface with the access panel facing up.
   - For rack models, extend the server from the rack (on page 22).
5. Remove the access panel (on page 21).
6. Remove the air baffle (on page 23).
7. Open the heatsink retaining levers.

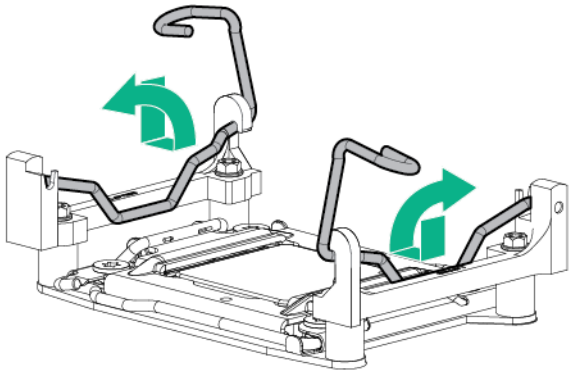

8. Remove the heatsink.

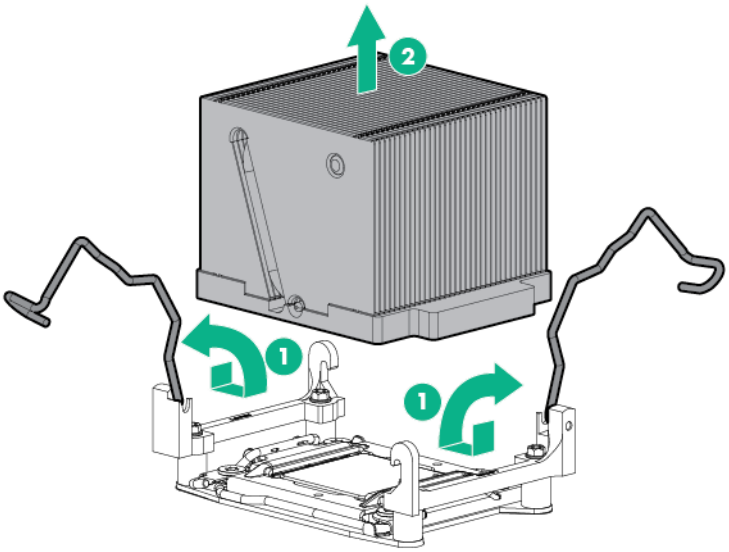

9. Remove the heatsink retaining levers.

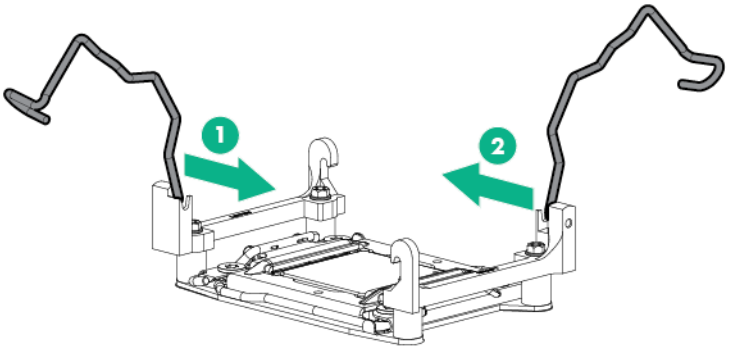

10. Open each of the processor locking levers in the order indicated, and then open the processor retaining bracket.

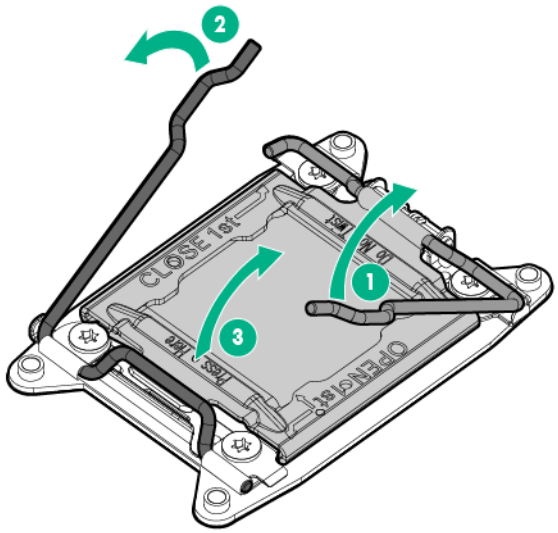

11. Remove the processor from the processor retaining bracket.

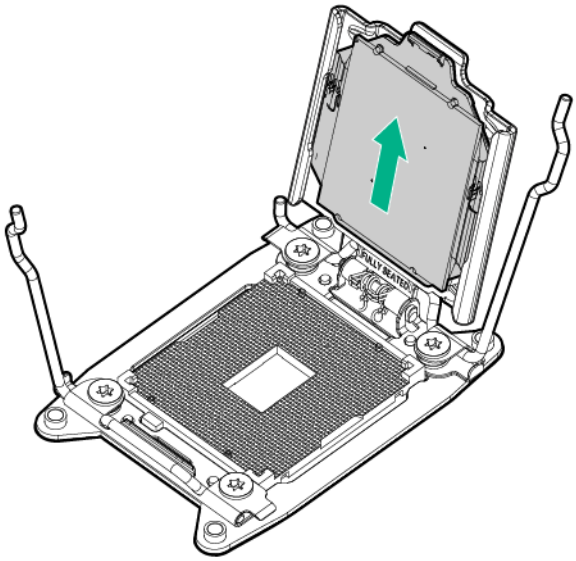

△ **CAUTION:** To avoid damage to the processor, do not touch the bottom of the processor, especially the contact area.

To install a processor:

1. Install the processor. Verify that the processor is fully seated in the processor retaining bracket by visually inspecting the processor installation guides on either side of the processor. **THE PINS ON THE SYSTEM BOARD ARE VERY FRAGILE AND EASILY DAMAGED**.

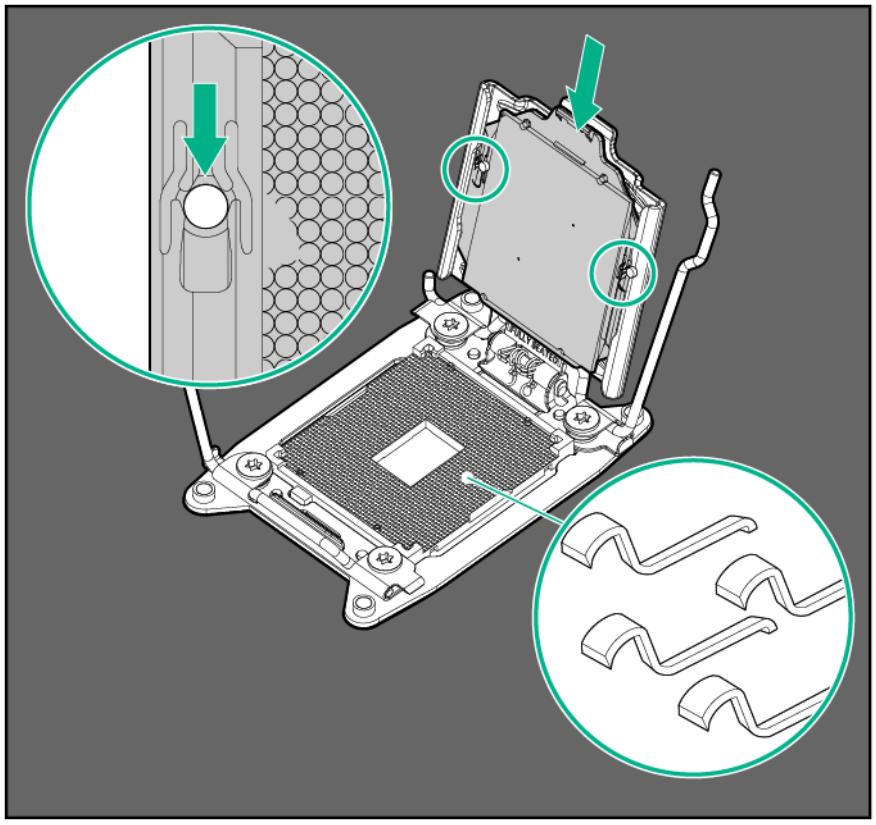

△ **CAUTION: THE PINS ON THE SYSTEM BOARD ARE VERY FRAGILE AND EASILY DAMAGED.** To avoid damage to the system board, do not touch the processor or the processor socket contacts.

2. Close the processor retaining bracket. When the processor is installed properly inside the processor retaining bracket, the processor retaining bracket clears the flange on the front of the socket.

△ **CAUTION:** Do not press down on the processor. Pressing down on the processor may cause damage to the processor socket and the system board. Press only in the area indicated on the processor retaining bracket.

3. Press and hold the processor retaining bracket in place, and then close each processor locking lever. Press only in the area indicated on the processor retaining bracket.

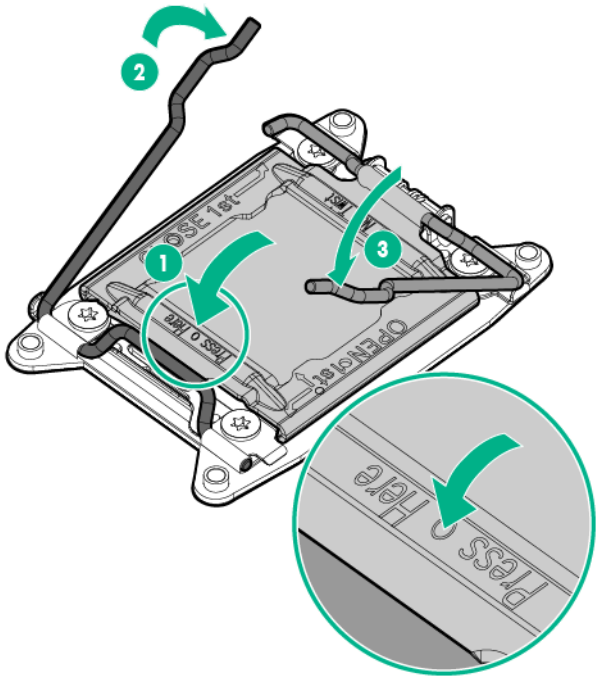

4. Install the heatsink retaining lever upgrade.

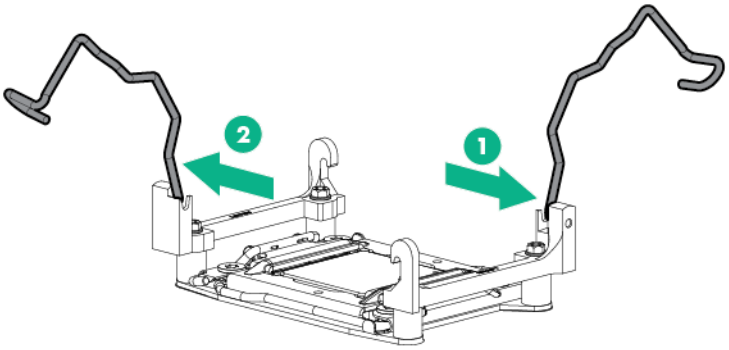

5. Use the alcohol swab to remove all the existing thermal grease from the heatsink. Allow the alcohol to evaporate before continuing.

6. Apply the thermal grease to the top of the processor in the following pattern.

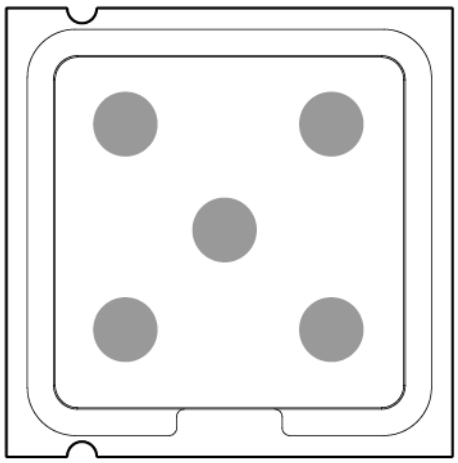

7. Install the heatsink, and then close the heatsink retaining levers.

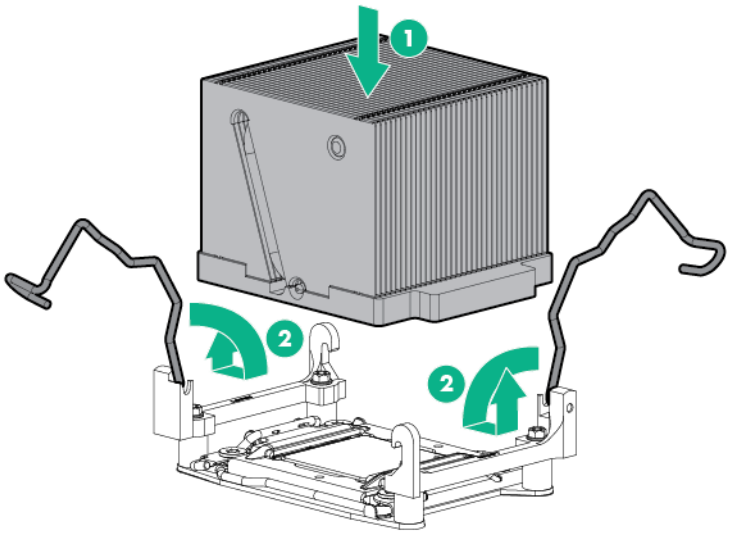

8. Install the air baffle.
9. Install the access panel (on page 22).
10. Do one of the following:
    - For tower models, return the server to an upright position.
    - For rack models, slide the server back into the rack.
11. Connect each power cord to the server.
12. Connect each power cord to the power source.
13. Press the Power On/Standby button.

    The server exits standby mode and applies full power to the system. The system power LED changes from amber to green.
14. Do one of the following:
    - For tower models, install the bezel.
    - For rack models, if removed, install the security bezel (on page 19).

Memory options

IMPORTANT: This server does not support mixing LRDIMMs, RDIMMs, or UDIMMs. Attempting to mix any combination of these DIMMs can cause the server to halt during BIOS initialization.

The memory subsystem in this server can support LRDIMMs, RDIMMs, or UDIMMs:

- UDIMMs represent the most basic type of memory module and offer lower latency in one DIMM per channel configurations and (relatively) low power consumption, but are limited in capacity.
- RDIMMs offer larger capacities than UDIMMs and include address parity protection.
- LRDIMMs support higher densities than single- and dual-rank RDIMMs, and higher speeds than quad-rank RDIMMs. This support enables you to install more high capacity DIMMs, resulting in higher system capacities and higher bandwidth.

All types are referred to as DIMMs when the information applies to all types. When specified as LRDIMM, RDIMM, or UDIMM, the information applies to that type only. All memory installed in the server must be the same type.

The server supports the following DIMM speeds:

- Single- and dual-rank PC3-12800 (DDR-1600) RDIMMs operating at up to 1600 MT/s
- Single- and dual-rank PC3-14900 (DDR-1866) RDIMMs operating at up to 1866 MT/s
- Single- and dual-rank PC3-14900 (DDR-1866) UDIMMs operating at up to 1866 MT/s
- Quad-rank PC3L-14900 (DDR3-1866) LRDIMMs, operating as dual-rank DIMMs, at up to 1866 MT/s

Speed, voltage, and capacity

DIMM type	DIMM rank	DIMM capacity	Native speed (MT/s)	Voltage
RDIMM	Single-rank	4 GB	1600	LV
RDIMM	Single-rank	4 GB	1866	STD
RDIMM	Dual-rank	8 GB	1600	LV
RDIMM	Single-rank	8 GB	1866	STD
RDIMM	Single-rank	8 GB	1600	LV
RDIMM	Dual-rank	16 GB	1600	LV
RDIMM	Dual-rank	8 GB	1866	LV
RDIMM	Dual-rank	16 GB	1866	STD
LRDIMM	Quad-rank	32 GB	1866	STD
UDIMM	Single-rank	2 GB	1600	LV
UDIMM	Dual-rank	4 GB	1600	LV
UDIMM	Dual-rank	8 GB	1600	LV
UDIMM	Single-rank	2 GB	1866	STD
UDIMM	Dual-rank	4 GB	1866	STD
UDIMM	Dual-rank	8 GB	1866	STD

Depending on the processor model, the number of DIMMs installed, and whether LRDIMMs, UDIMMs, or RDIMMs are installed, the memory clock speed can be reduced to 1866 or 1600 MT/s. Clock speed can also be reduced when using low voltage DIMMs.

Populated DIMM speed (MT/s)

DIMM type	DIMM rank	2 slots per channel				3 slots per channel	
		1 DPC		2 DPC		3 DPC	
—	—	1.35 V	1.50 V	1.35 V	1.50 V	1.35 V	1.50 V
RDIMM	Single-rank (4 GB)	1333, 1600	1600, 1866	1333, 1600	1600, 1866	800, 800*	1066, 1066
RDIMM	Single-rank (8 GB)	1333, 1600	1600, 1866	1333, 1600	1600, 1866	800, 800*	1066, 1066
RDIMM	Dual-rank (8 GB)	1333, 1600	1600, 1866	1333, 1600	1600, 1866	800, 800*	1066, 1066
RDIMM	Dual-rank (16 GB)	1333, 1600	1600, 1866	1333, 1600	1600, 1866	800, 800*	1066., 1066
LRDIMM	Quad-rank (32 GB)	—	1600, 1866**	—	1600	—	1066, 1333
UDIMM	Single-rank (2 GB)	1333, 1600	1600, 1866	1333, 1600†	1600, 1866	—	—
UDIMM	Dual-rank (4 GB)	1333, 1600	1600, 1866	1333, 1600†	1600, 1866	—	—
UDIMM	Dual-rank (8 GB)	1333, 1600	1600, 1866	1333, 1600†	1600, 1866	—	—

* RDIMMs support 1.35V 3DPC at 1066. Third-party memory supports 1.5V 3DPC at 1066.
** LRDIMMs enable 3 DIMMs per channel. SmartMemory supports up to 3DPC at 1066 at 1.35V. Third-party memory supports 1.5V only.
† UDIMMs are supported at 2DPC at 1333, using SmartMemory only. Third-party memory supports up to 2DPC at 1066.

RDIMM, LRDIMM, and UDIMM for 3 slots per channel (1DPC and 2 DPC) supports the same data rates as 2 slot per channel.

HPE SmartMemory

HPE SmartMemory, introduced for Gen8 servers, authenticates and unlocks certain features available only on HPE Qualified memory and verifies whether installed memory has passed Hewlett Packard Enterprise qualification and test processes. Qualified memory is performance-tuned for ProLiant and BladeSystem servers and provides future enhanced support through Active Health and manageability software.

Certain performance features are unique with SmartMemory. SmartMemory 1.35V DDR3-1333 Registered memory is engineered to achieve the same performance level as 1.5V memory. For example, while the industry supports DDR3-1333 RDIMM at 1.5V, this Gen8 server supports DDR3-1333 RDIMM up to 3 DIMMs per channel at 1066 MT/s running at 1.35V. This equates to up to 20% less power at the DIMM level with no performance penalty. In addition, the industry supports UDIMM at 2 DIMMs per channel at 1066 MT/s. SmartMemory supports 2 DIMMs per channel at 1333 MT/s, or 25% greater bandwidth.

Memory subsystem architecture

The memory subsystem in this server is divided into channels. Each processor supports four channels, and each channel supports three DIMM slots.

Memory subsystem channel	Population order	Slot number (Processor 2)	Slot number (Processor 1)
1	A E I	12 11 10	1 2 3
2	B F J	9 8 7	4 5 6
3	C G K	1 2 3	12 11 10
4	D H L	4 5 6	9 8 7

For the location of the slot numbers, see "DIMM slots (on page 11)."

This multi-channel architecture provides enhanced performance in Advanced ECC mode. This architecture also enables Lockstep and Online Spare Memory modes.

DIMM slots in this server are identified by number and by letter. Letters identify the population order. Slot numbers indicate the DIMM slot ID for spare replacement.

Population order

For memory configurations with a single processor or multiple processors, populate the DIMM slots in the following order:

- LRDIMM: Sequentially in alphabetical order (A through L)
- RDIMM: Sequentially in alphabetical order (A through L)
- UDIMM: A through H, sequentially in alphabetical order. Do not populate DIMM slots I through L.

After installing the DIMMs, use RBSU to configure Advanced ECC, online spare, or lockstep memory support.

Installing a DIMM

△ **CAUTION:** To avoid damage to the hard drives, memory, and other system components, the air baffle, drive blanks, and access panel must be installed when the server is powered up.

1. Do one of the following:
   - For tower models, open and remove the bezel ("Remove the tower bezel" on page 19).
   - For rack models, if installed, remove the security bezel (on page 19).
2. Power down the server (on page 18).
3. Remove all power:
   a. Disconnect each power cord from the power source.
   b. Disconnect each power cord from the server.
4. Do one of the following:
   - For tower models, place the server on a flat, level surface with the access panel facing up.
   - For rack models, extend the server from the rack (on page 22).
5. Remove the access panel (on page 21).

6. Remove the air baffle (on page 23).
7. Open the DIMM slot latches.
8. Install the DIMM.

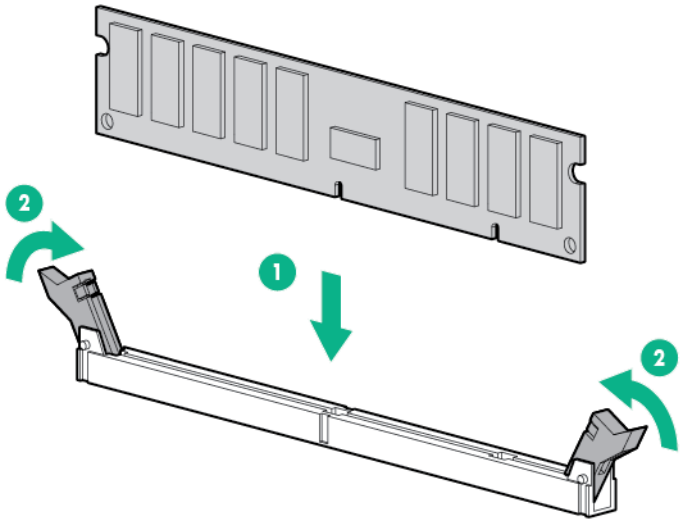

If you are installing DIMMs in lock-step configuration, configure this mode in RBSU ("HPE ROM-Based Setup Utility" on page 109).

For more information about LEDs and troubleshooting failed DIMMs, see Systems Insight Display LED combinations (on page 13).

Single-, dual-, and quad-rank DIMMs

To understand and configure memory protection modes properly, an understanding of single-, dual-, and quad-rank DIMMs is helpful. Some DIMM configuration requirements are based on these classifications.

A single-rank DIMM has one set of memory chips that is accessed while writing to or reading from the memory. A dual-rank DIMM is similar to having two single-rank DIMMs on the same module, with only one rank accessible at a time. A quad-rank DIMM is, effectively, two dual-rank DIMMs on the same module. Only one rank is accessible at a time. The server memory control subsystem selects the proper rank within the DIMM when writing to or reading from the DIMM.

Dual- and quad-rank DIMMs provide the greatest capacity with the existing memory technology. For example, if current DRAM technology supports 8-GB single-rank DIMMs, a dual-rank DIMM would be 16 GB, and a quad-rank DIMM would be 32 GB.

LRDIMMs are labeled as quad-rank DIMMs; however, they function more like dual-rank DIMMs. There are four ranks of DRAM on the DIMM, but the LRDIMM buffer creates an abstraction that allows the DIMM to appear as a dual-rank DIMM to the system. The LRDIMM buffer also isolates the electrical loading of the DRAM from the system to allow for faster operation. These two changes allow the system to support up to three LRDIMMs per memory channel, providing for up to 50% greater memory capacity and higher memory operating speed compared to quad-rank RDIMMs.

DIMM identification

To determine DIMM characteristics, use the label attached to the DIMM and the following illustration and table.

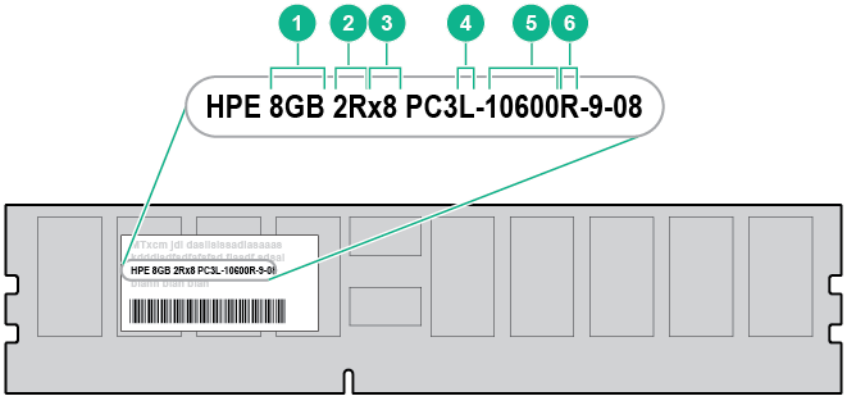

Item	Description	Definition
1	Size	—
2	Rank	1R = Single-rank 2R = Dual-rank 3R = Three-rank 4R = Quad-rank
3	Data width	x4 = 4-bit x8 = 8-bit
4	Voltage rating	L = Low voltage (1.35V) U = Ultra low voltage (1.25V) Blank or omitted = Standard
5	Memory speed	12800 = 1600-MT/s 10600 = 1333-MT/s 8500 = 1066-MT/s
6	DIMM type	R = RDIMM (registered) E = UDIMM (unbuffered with ECC) L = LRDIMM (load reduced) H = HDIMM (HyperCloud)

Memory configurations

To optimize server availability, the server supports the following AMP modes:

- Advanced ECC—provides up to 4-bit error correction and enhanced performance over Lockstep mode. This mode is the default option for this server.
- Online spare memory—provides protection against failing or degraded DIMMs. Certain memory is reserved as spare, and automatic failover to spare memory occurs when the system detects a DIMM that is degrading. This allows DIMMs that have a higher probability of receiving an uncorrectable memory error (which would result in system downtime) to be removed from operation.

Advanced Memory Protection options are configured in RBSU. If the requested AMP mode is not supported by the installed DIMM configuration, the server boots in Advanced ECC mode. For more information, see "HPE ROM-Based Setup Utility (on page 109)."

The server also can operate in independent channel mode or combined channel mode (lockstep). When running in lockstep mode, you gain reliability in one of two ways:

- If running with UDIMMs (built with x8 DRAM devices), the system can survive a complete DRAM failure (SDDC). In independent channel mode, this failure would be an uncorrectable error.
- If running with RDIMM (built with x4 DRAM devices), the system can survive the complete failure of two DRAM devices (DDDC). Running in independent mode, the server can only survive the complete failure of a single DRAM device (SDDC).

Maximum capacity

DIMM type	DIMM rank	One processor	Two processors
RDIMM	Single-rank	96 GB	192 GB
RDIMM	Dual-rank	192 GB	384 GB
LRDIMM	Quad-rank	384 GB	768 GB
UDIMM	Single-rank	16 GB	32 GB
UDIMM	Dual-rank	64 GB	128 GB

For the latest memory configuration information, see the QuickSpecs on the Hewlett Packard Enterprise website (http://www.hpe.com/info/qs).

Advanced ECC

Advanced ECC memory is the default memory protection mode for the server. Standard ECC can correct single-bit memory errors and detect multibit memory errors. When multibit errors are detected using Standard ECC, the error is signaled to the server and causes the server to halt.

Advanced ECC protects the server against some multibit memory errors. Advanced ECC can correct both single-bit memory errors and 4-bit memory errors if all failed bits are on the same DRAM device on the DIMM.

Advanced ECC provides additional protection over Standard ECC because it is possible to correct certain memory errors that would otherwise be uncorrected and result in a server failure. Using HPE Advanced Memory Error Detection technology, the server provides notification when a DIMM is degrading and has a higher probability of uncorrectable memory error.

Online Spare memory configuration

Online spare memory provides protection against degraded DIMMs by reducing the likelihood of uncorrected memory errors. This protection is available without any operating system support.

Online spare memory protection dedicates one rank of each memory channel for use as spare memory. The remaining ranks are available for OS and application use. If correctable memory errors occur at a rate higher than a specific threshold on any of the non-spare ranks, the server automatically copies the memory contents of the degraded rank to the online spare rank. The server then deactivates the failing rank and automatically switches over to the online spare rank.

Lockstep memory configuration

Lockstep mode provides protection against multi-bit memory errors that occur on the same DRAM device. Lockstep mode can correct any single DRAM device failure on x4 and x8 DIMM types. The DIMMs in each channel must have identical Hewlett Packard Enterprise part numbers.

General DIMM slot population guidelines

Observe the following guidelines for all AMP modes:

- Install DIMMs only if the corresponding processor is installed.

- When two processors are installed, balance the DIMMs across the two processors.
- White DIMM slots denote the first slot of a channel (Ch 1-A, Ch 2-B, Ch 3-C, Ch 4-D)
- Do not mix RDIMMs, UDIMMs, or LRDIMMs.
- When one processor is installed, install DIMMs in sequential alphabetic order: A, B, C, D, E, F, and so forth.
- When two processors are installed, install the DIMMs in sequential alphabetic order balanced between the two processors: P1-A, P2-A, P1-B, P2-B, P1-C, P2-C, and so forth.
- For DIMM spare replacement, install the DIMMs per slot number as instructed by the system software.

For detailed memory configuration rules and guidelines, use the Online DDR3 Memory Configuration Tool on the Hewlett Packard Enterprise website (http://www.hpe.com/info/ddr3memory-configurator).

The following DIMM speeds are supported in this server.

Populated slots (per channel)	Rank	Speeds supported (MHz)*	Speeds supported (MHz)**
1	Single or dual	1066, 1333, 1600	1333, 1600, 1866
2	Single or dual	1066, 1333, 1600	1333, 1600, 1866
1	Quad	-	1866
2	Quad	-	1866

*Intel Xeon Processor E5-2600 series
**Intel Xeon Processor E5-2600 v2 series

Advanced ECC population guidelines

For Advanced ECC mode configurations, observe the following guidelines:

- Observe the general DIMM slot population guidelines.
- DIMMs may be installed individually.

Online spare population

For Online Spare memory mode configurations, observe the following guidelines:

- Observe the general DIMM slot population guidelines.
- Each channel must have a valid online spare configuration.
- Each channel can have a different valid online spare configuration.
- Each populated channel must have a spare rank:
  - A single dual-rank DIMM is not a valid configuration.
  - LRDIMMs are treated as dual-rank DIMMs.

Lockstep Memory population guidelines

For Lockstep memory mode configurations, observe the following guidelines:

- Observe the general DIMM slot population guidelines.
- DIMM configuration on all channels of a processor must be identical.
- In multi-processor configurations, each processor must have a valid Lockstep Memory configuration.
- In multi-processor configurations, each processor might have a different valid Lockstep Memory configuration.

Optical drive cage option

1. Do one of the following:
   - For tower models, open and remove the bezel ("Remove the tower bezel" on page 19).
   - For rack models, if installed, remove the security bezel (on page 19).
2. Power down the server (on page 18).
3. Remove all power:
   a. Disconnect each power cord from the power source.
   b. Disconnect each power cord from the server.
4. For tower models, do the following:
   a. Place the server on a flat, level surface with the access panel facing up.
   b. Remove the access panel (on page 21).
5. For rack models, do the following:
   a. Extend the server from the rack (on page 22).
   b. Remove the access panel (on page 21).
   c. Release thumbscrews and remove the rack bezel ("Remove the rack bezel" on page 20).
6. Remove the blank from box 3.

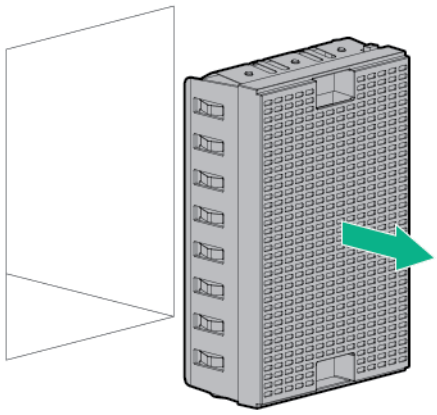

7. Install the optical drive cage.

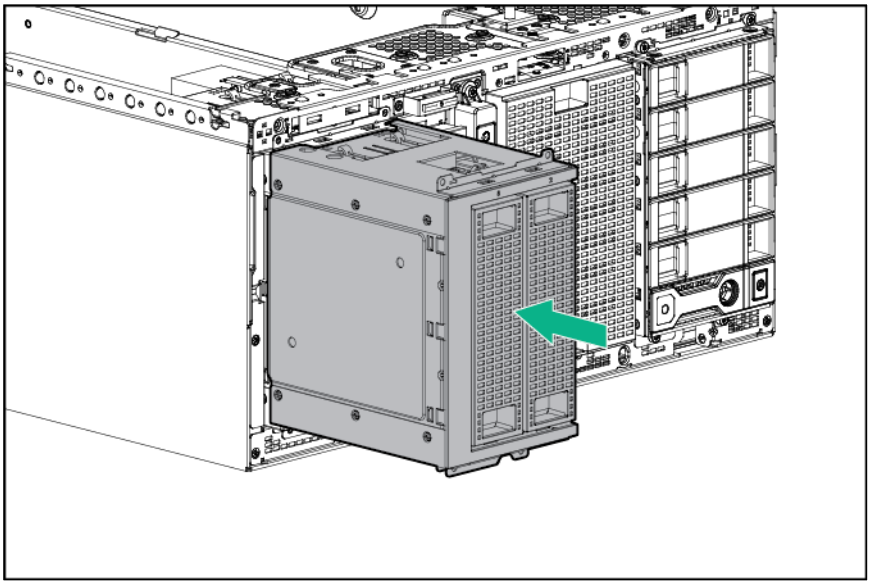

8. Using the T-15 screws, secure the optical drive cage.

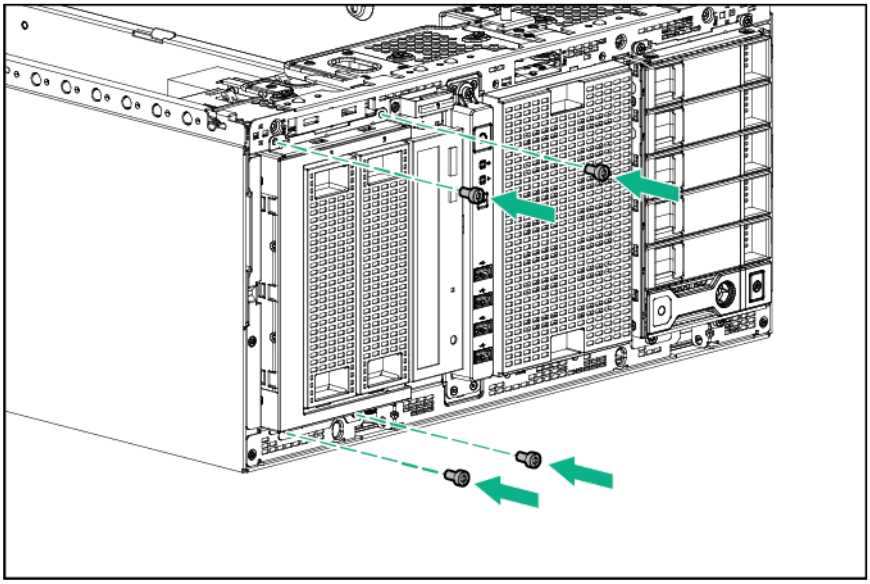

9. The Torx screws required to install optical drives are located on the chassis.

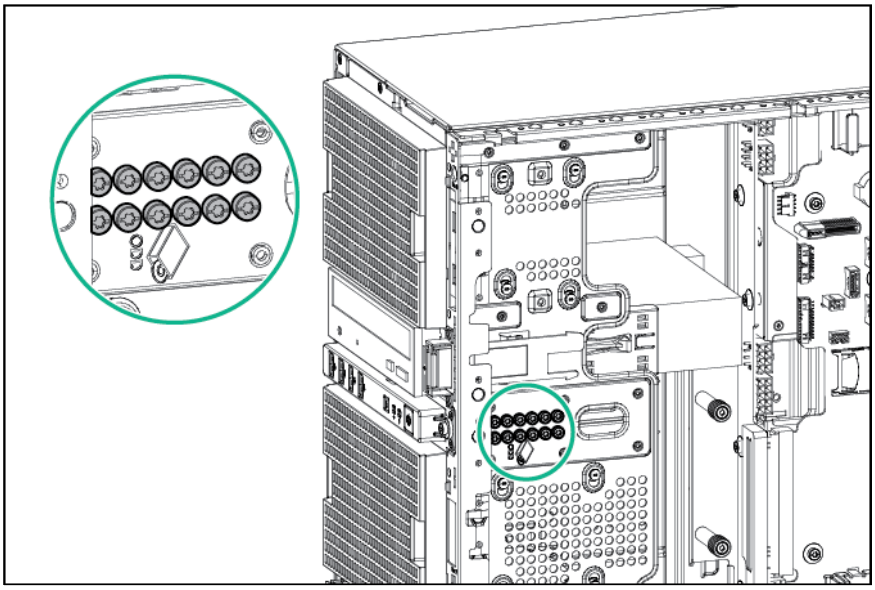

10. For tower models, do the following:
    a. Install the access panel (on page 22).
    b. Return the server to an upright position.
11. For rack models, do the following:
    a. Install the rack bezel (on page 21).
    b. Install the access panel (on page 22).
    c. Slide the server back into the rack.
12. Connect each power cord to the server.
13. Connect each power cord to the power source.
14. Press the Power On/Standby button.

    The server exits standby mode and applies full power to the system. The system power LED changes from amber to green.
15. Do one of the following:
    - For tower models, install the bezel.
    - For rack models, if removed, install the security bezel (on page 19).

Optical drive option

The server supports both DVD-ROM and DVD-RW drives.

1. Do one of the following:
    - For tower models, open and remove the bezel ("Remove the tower bezel" on page 19).
    - For rack models, if installed, remove the security bezel (on page 19).
2. Power down the server (on page 18).
3. Remove all power:
    a. Disconnect each power cord from the power source.
    b. Disconnect each power cord from the server.
4. For tower models, do the following:
    a. Place the server on a flat, level surface with the access panel facing up.

b. Remove the access panel (on page 21).

5. For rack models, do the following:
   a. Extend the server from the rack (on page 22).
   b. Remove the access panel (on page 21).
   c. Release thumbscrews and remove the rack bezel ("Remove the rack bezel" on page 20).
6. Remove the blank from the drive cage.

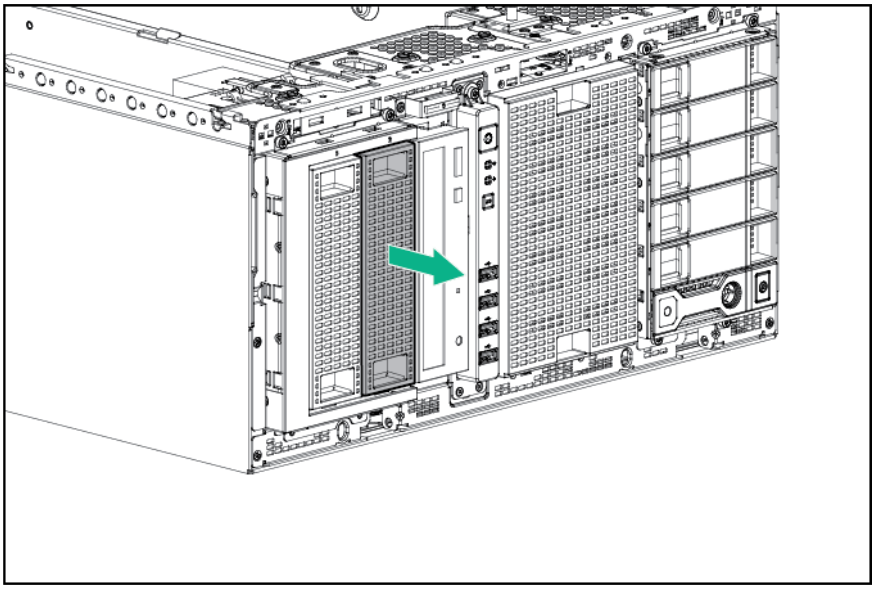

7. Install the optical drive into the drive cage.

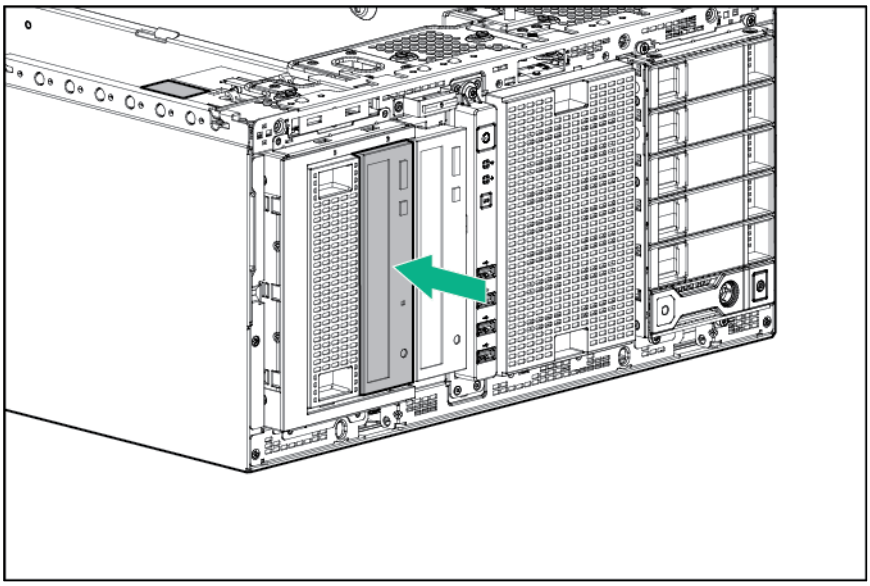

8. Remove the air baffle (on page 23).
9. Remove the fan cage (on page 25).
10. Connect the power cable from the drive to the system board.

11. Connect the SATA cable from the drive to the system board.

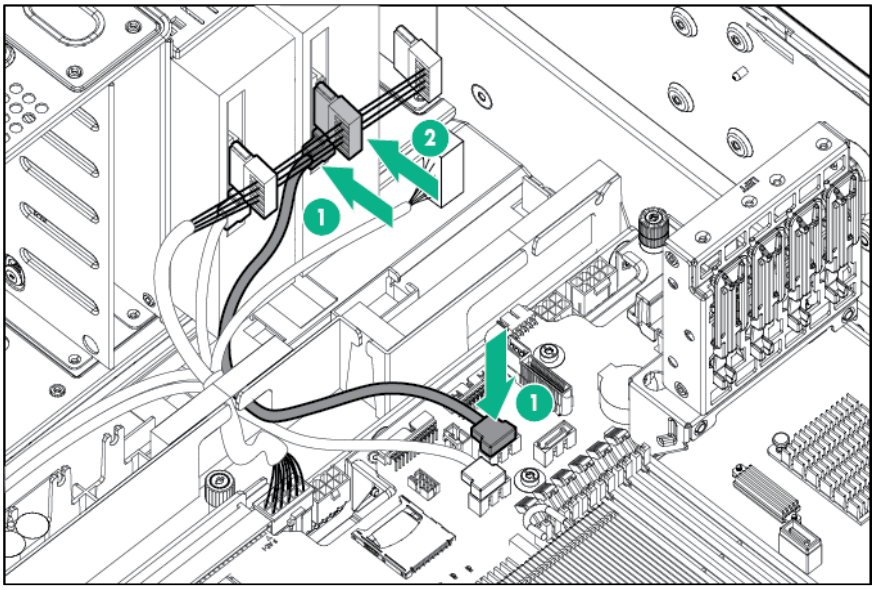

12. Install the fan cage.
13. Install the air baffle (on page 24).
14. For tower models, do the following:
    a. Install the access panel (on page 22).
    b. Return the server to an upright position.
15. For rack models, do the following:
    a. Install the rack bezel (on page 21).
    b. Install the access panel (on page 22).
    c. Slide the server back into the rack.
16. Connect each power cord to the server.
17. Connect each power cord to the power source.
18. Press the Power On/Standby button.

    The server exits standby mode and applies full power to the system. The system power LED changes from amber to green.
19. Do one of the following:
    - For tower models, install the bezel.
    - For rack models, if removed, install the security bezel (on page 19).

Redundant power supply option

IMPORTANT: The DC power supply unit must only be installed by a qualified technician.

- The 14 AWG green or yellow wire must be fastened to the metal enclosure with a screw and a spring or star washer.
- When installing the DC power supply unit, the ground wire must be connected before the positive or negative leads.

CAUTION: All power supplies installed in the server must have the same output power capacity. Verify that all power supplies have the same part number and label color. The system becomes unstable and may shut down when it detects mismatched power supplies.

Label color	Output
Blue	460W
Orange	750W
White	750W 48V DC
Green	1,200W

CAUTION: To prevent improper cooling and thermal damage, do not operate the server unless all bays are populated with either a component or a blank.

To install the component:

1. Access the product rear panel.
2. Remove the blank.

WARNING: To reduce the risk of personal injury from hot surfaces, allow the power supply or power supply blank to cool before touching it.

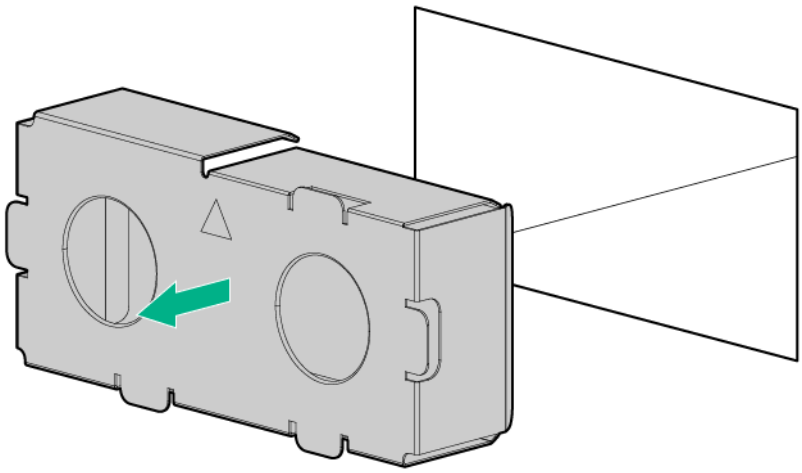

3. Insert the power supply into the power supply bay until it clicks into place.

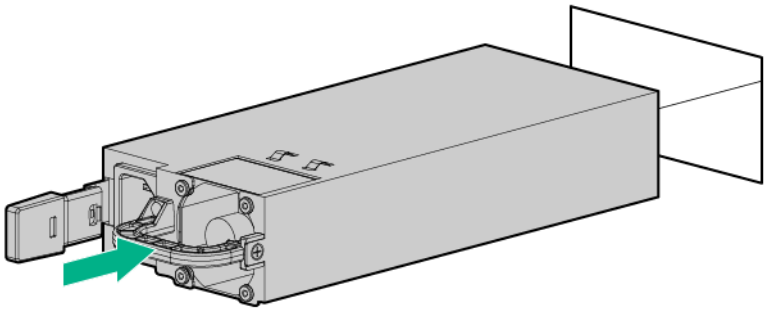

4. Connect the power cord to the power supply.
5. For rack servers, use the strain relief clip from the server hardware kit to secure the power cord.
6. Connect the power cord to the power source.
7. Be sure that the power supply LED is green.

Hot-plug SAS drive options

When adding drives to the server, observe the following general guidelines:

- The system automatically sets all device numbers.
- If only one drive is used, install it in the bay with the lowest device number ("SAS and SATA device numbers" on page 14).
- Drives should be the same capacity to provide the greatest storage space efficiency when drives are grouped together into the same drive array.

Removing the drive blank

1. Do one of the following:
   - For tower models, open and remove the bezel ("Remove the tower bezel" on page 19).
   - For rack models, if installed, remove the security bezel (on page 19).
2. Remove the drive blank.

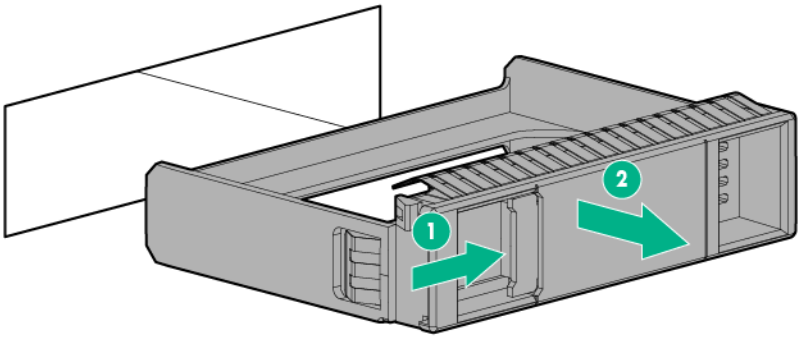

Installing a hot-plug drive

⚠ **WARNING:** To reduce the risk of injury from electric shock, do not install more than one drive carrier at a time.

The server can support six drives in a LFF configuration, or eight drives in a SFF configuration.

To install the component:

1. Do one of the following:
   - For tower models, open and remove the bezel ("Remove the tower bezel" on page 19).
   - For rack models, if installed, remove the security bezel (on page 19).

2. Remove the drive blank.

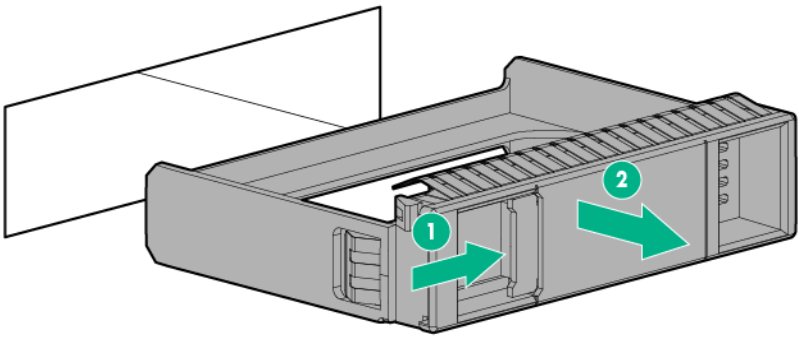

3. Prepare the drive.

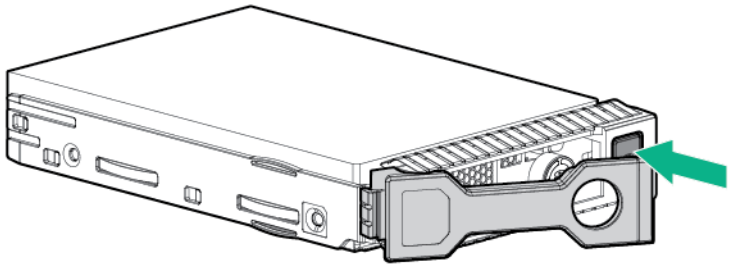

4. Install the drive.

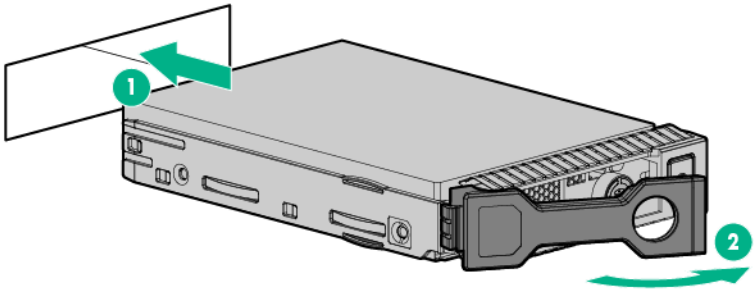

5. Determine the status of the drive from the drive LEDs ("Hot-plug drive LED definitions" on page 15).
6. Do one of the following:
   - For tower models, install the bezel.
   - For rack models, if removed, install the security bezel (on page 19).

Expansion board option

1. Do one of the following:
   - For tower models, open and remove the bezel ("Remove the tower bezel" on page 19).
   - For rack models, if installed, remove the security bezel (on page 19).
2. Power down the server (on page 18).
3. Remove all power:
   a. Disconnect each power cord from the power source.

b. Disconnect each power cord from the server.

4. Do one of the following:
   - For tower models, place the server on a flat, level surface with the access panel facing up.
   - For rack models, extend the server from the rack (on page 22).
5. Remove the access panel (on page 21).
6. Remove the air baffle (on page 23).
7. Open the PCIe retainer latch.

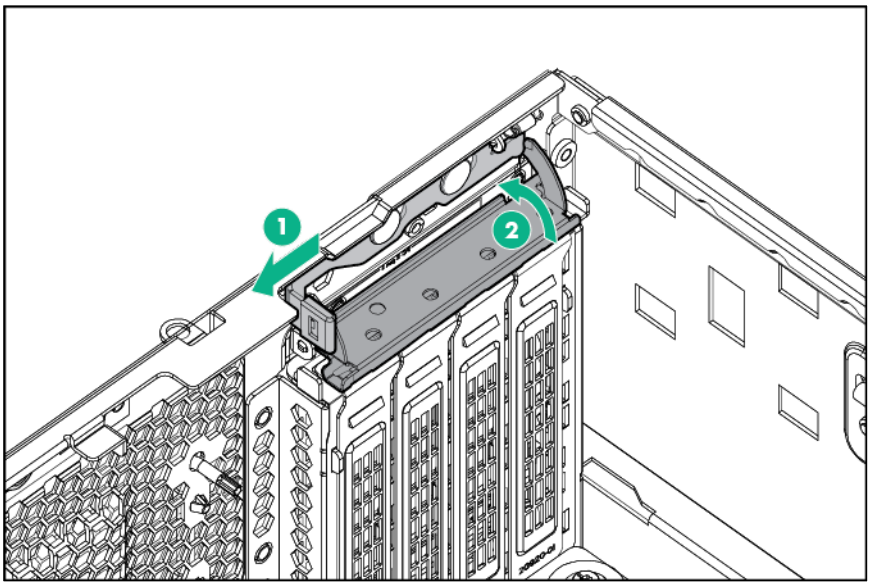

8. Do one of the following:
   a. If you are installing a single-width expansion card, remove one PCIe blank.
   b. If you are installing a double-width expansion card, remove two PCIe blanks.

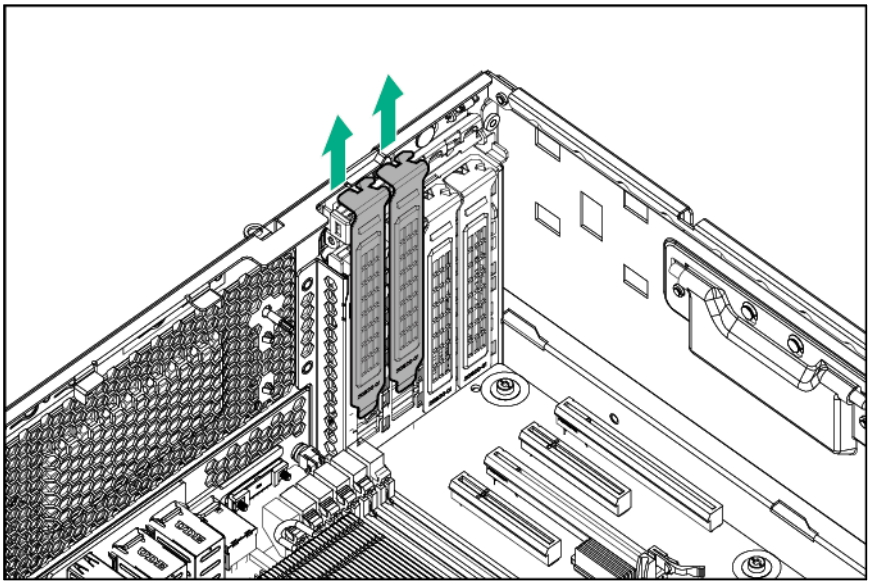

9. Install the expansion board.

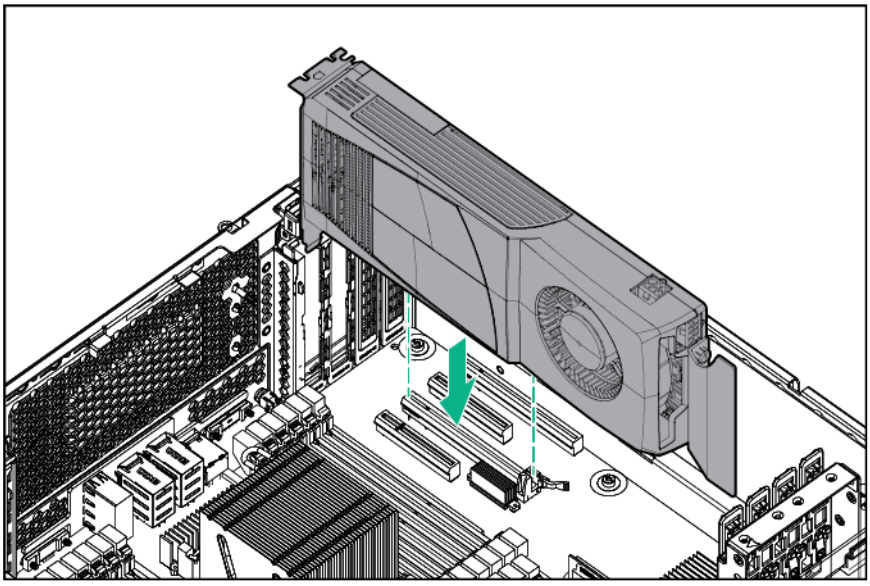

10. Close the PCIe retainer latch.

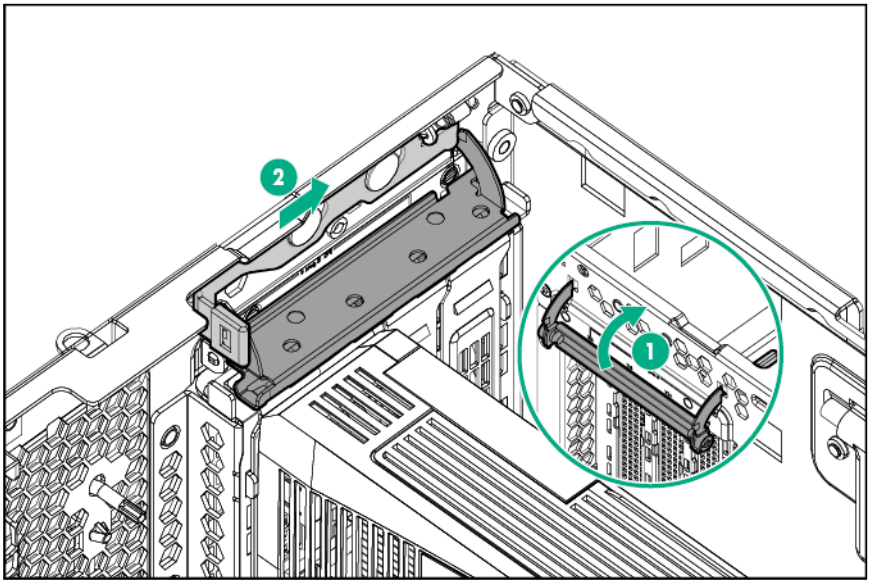

11. Install the air baffle (on page 24).
12. Install the access panel (on page 22).
13. Do one of the following:
    - For tower models, return the server to an upright position.
    - For rack models, slide the server back into the rack.
14. Connect each power cord to the server.
15. Connect each power cord to the power source.
16. Press the Power On/Standby button.

    The server exits standby mode and applies full power to the system. The system power LED changes from amber to green.
17. Do one of the following:
    - For tower models, install the bezel.

- For rack models, if removed, install the security bezel (on page 19).

Graphic card option

The server supports up to three graphic card options. The server supports up to two double-wide graphic cards.

For optimal performance, Hewlett Packard Enterprise recommends that you install graphic card options in PCI slots 3, 6, or 8.

Hewlett Packard Enterprise recommends the following:

- If the graphic card is populated in PCI slot 3, do not use PCI slot 2.
- If a single-wide graphic card is populated in PCI slot 8, do not use PCI slot 9.
- In a single-processor configuration, Hewlett Packard Enterprise recommends installing the graphic card in PCI slot 3.
- In a two-processor configuration, Hewlett Packard Enterprise recommends installing the graphic card in PCI slot 6.
- If a third graphic card is installed, Hewlett Packard Enterprise recommends installing the third graphic card in PCI slot 8.

Installing a graphic card adapter option

1. Do one of the following:
   - For tower models, open and remove the bezel ("Remove the tower bezel" on page 19).
   - For rack models, if installed, remove the security bezel (on page 19).
2. Power down the server (on page 18).
3. Remove all power:
   a. Disconnect each power cord from the power source.
   b. Disconnect each power cord from the server.
4. Do one of the following:
   - For tower models, place the server on a flat, level surface with the access panel facing up.
   - For rack models, extend the server from the rack (on page 22).
5. Remove the access panel (on page 21).
6. Remove the air baffle (on page 23).
7. Remove the fan cage (on page 25).
8. Select the appropriate PCIe slot to install the graphic card adapter.

9. Open the PCIe retainer latch.

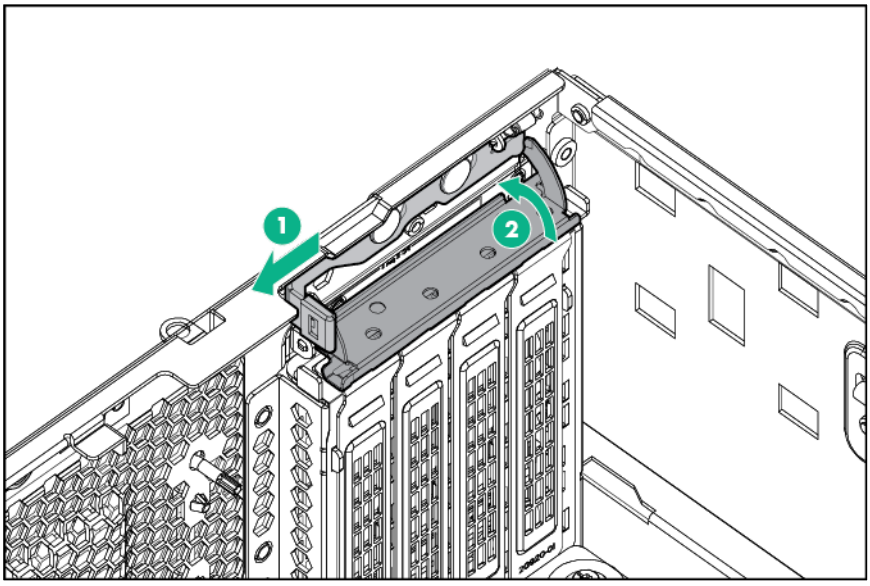

10. Do one of the following:
    - If you are installing a single-width graphic card adapter, remove one PCIe blank.
    - If you are installing a double-width graphic card adapter, remove two PCIe blanks.

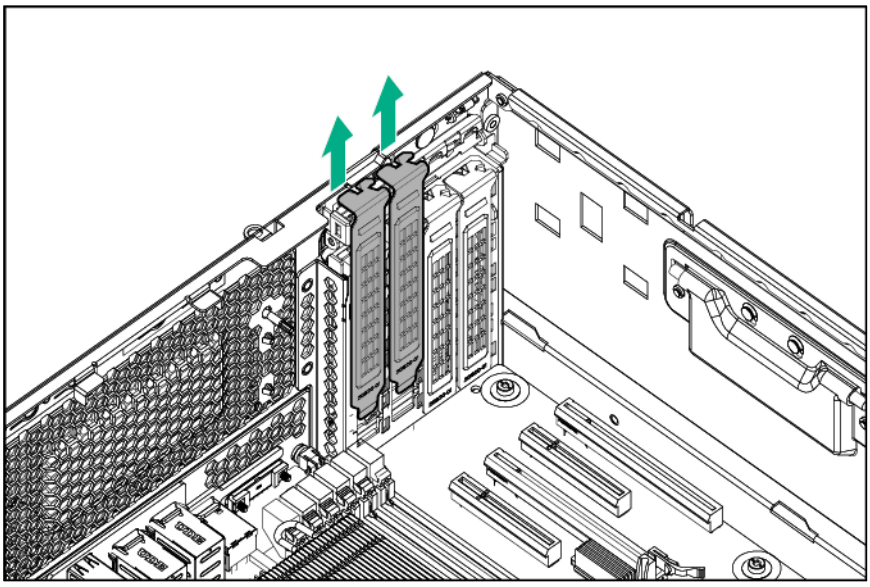

11. Install the graphic adapter in a x16 PCIe expansion slot.

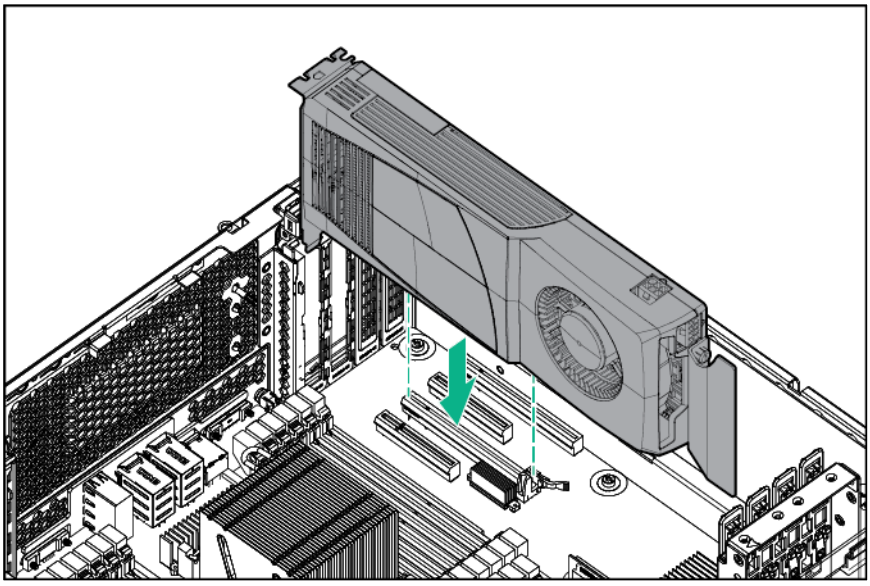

12. Connect the graphic card adapter cable to the appropriate graphic card connector.

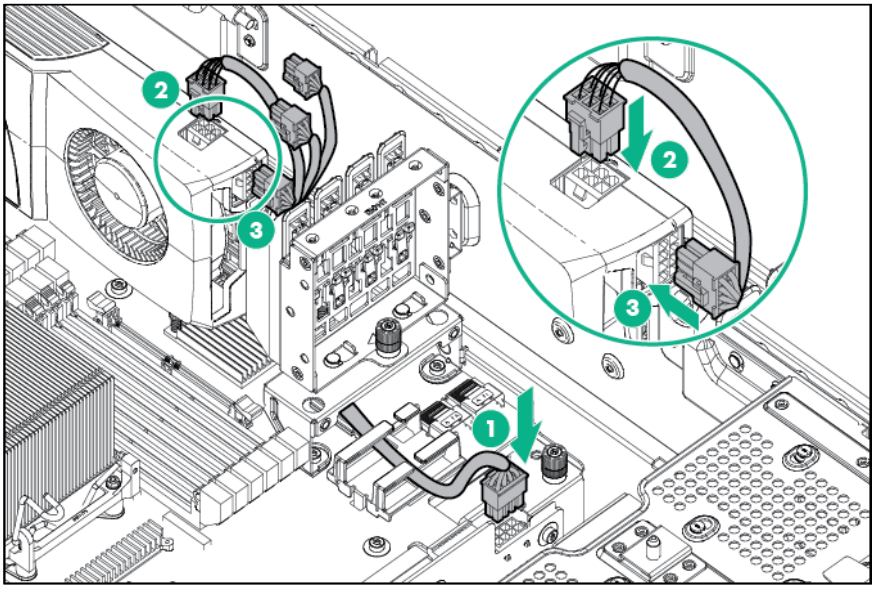

NOTE: For more information about installing a graphic card, see the documentation that ships with the graphic card option kit.

13. Close the PCIe retainer latch.

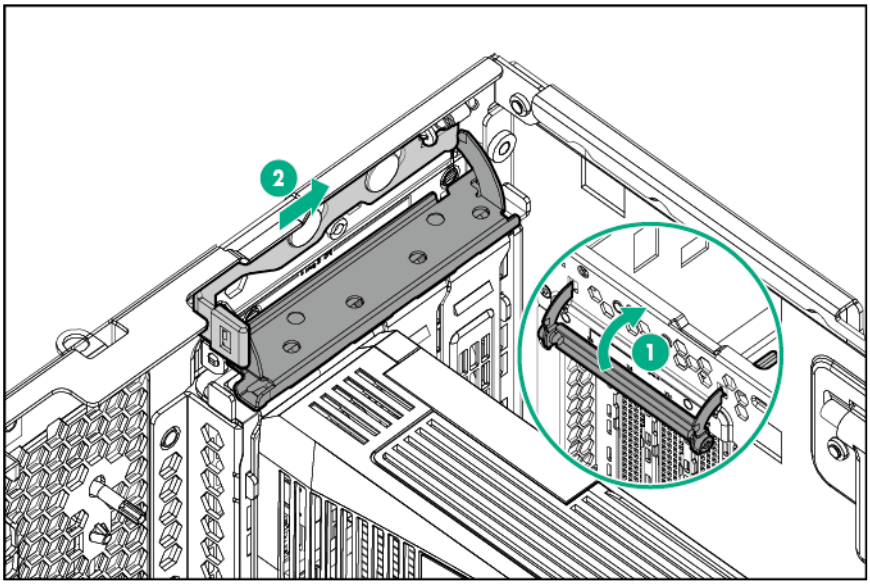

NOTE: Install the graphic card bracket only if you have installed a double-width graphic card.

14. Install the graphic card bracket, and then tighten the screws.

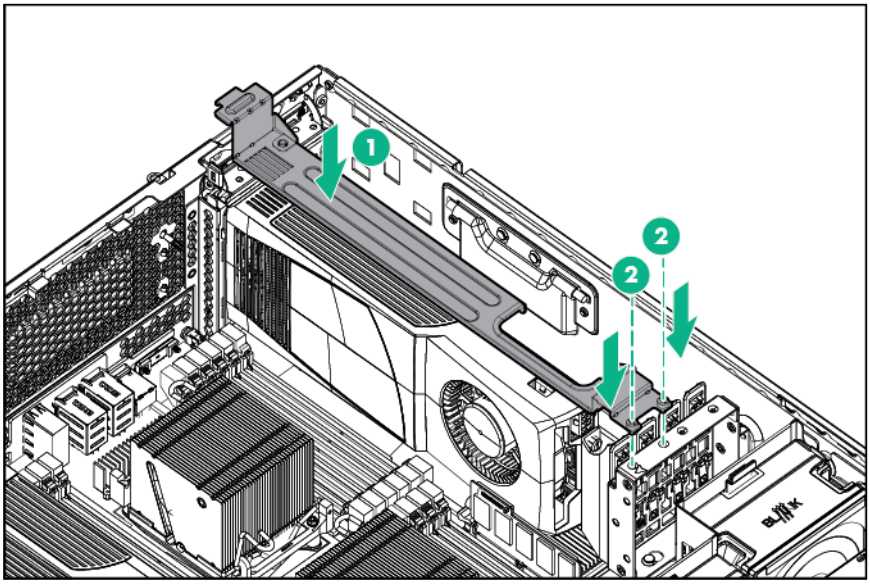

15. Install the fan cage.
16. Install the air baffle (on page 24).
17. Install the access panel (on page 22).
18. Do one of the following:
    - For tower models, return the server to an upright position.
    - For rack models, slide the server back into the rack.
19. Connect each power cord to the server.
20. Connect each power cord to the power source.
21. Press the Power On/Standby button.

The server exits standby mode and applies full power to the system. The system power LED changes from amber to green.

22. Do one of the following:
    - For tower models, install the bezel.
    - For rack models, if removed, install the security bezel (on page 19).

Controller option

The server ships with an embedded Smart Array P420i Controller.

For more information about the storage controller and its features, select the relevant controller user documentation on the Hewlett Packard Enterprise website (http://www.hpe.com/support/SAC_UG_ProLiantServers_en).

To configure arrays, see the user guide for Smart Array Controllers on the Hewlett Packard Enterprise website (http://www.hpe.com/support/CASAC_RG_en).

Upgrade options exist for the integrated array controller. For a list of supported options, see the QuickSpecs on the Hewlett Packard Enterprise website (http://www.hpe.com/info/qs).

The server supports the FBWC option:

The FBWC option consists of a cache module and a capacitor pack. The DDR cache module buffers and stores data being written by the controller. When the system is powered on, the capacitor pack charges fully in about 5 minutes. In the event of a system power failure, a fully charged capacitor pack provides power for up to 80 seconds. During that interval, the controller transfers the cached data from DDR memory to flash memory, where the data remains indefinitely or until a controller retrieves the data.

CAUTION: The cache module connector does not use the industry-standard DDR3 mini-DIMMs. Do not use the controller with cache modules designed for other controller models, because the controller can malfunction and you can lose data. Also, do not transfer this cache module to an unsupported controller model, because you can lose data.

CAUTION: To prevent a server malfunction or damage to the equipment, do not add or remove the capacitor pack while an array capacity expansion, RAID level migration, or stripe size migration is in progress.

CAUTION: After the server is powered down, wait 15 seconds and then check the amber LED before unplugging the cable from the cache module. If the amber LED blinks after 15 seconds, do not remove the cable from the cache module. The cache module is backing up data, and data is lost if the cable is detached.

IMPORTANT: The battery pack might have a low charge when installed. In this case, a POST error message is displayed when the server is powered up, indicating that the battery pack is temporarily disabled. No action is necessary on your part. The internal circuitry automatically recharges the batteries and enables the battery pack. This process might take up to four hours. During this time, the cache module functions properly, but without the performance advantage of the battery pack.

NOTE: The data protection and the time limit also apply if a power outage occurs. When power is restored to the system, an initialization process writes the preserved data to the hard drives.

Installing a storage controller

IMPORTANT: For additional installation and configuration information, see the documentation that ships with the option.

IMPORTANT: The P822 controller card is only supported in PCIe slots 3 and 4. If the controller card is configured in PCIe slot 3, slot 4 must remain empty.

IMPORTANT: The P420 controller card is not supported in PCIe slots 3 and 4.

IMPORTANT: The P222 controller card is only supported in two processor configuration. Hewlett Packard Enterprise recommends installing the controller card in slot 5 only. Ensure that slot 6 is empty to allow adequate airflow for proper cooling.

1. Do one of the following:
   - For tower models, open and remove the bezel ("Remove the tower bezel" on page 19).
   - For rack models, if installed, remove the security bezel (on page 19).
2. Power down the server (on page 18).
3. Remove all power:
   a. Disconnect each power cord from the power source.
   b. Disconnect each power cord from the server.
4. Do one of the following:
   - For tower models, place the server on a flat, level surface with the access panel facing up.
   - For rack models, extend the server from the rack (on page 22).
5. Remove the access panel (on page 21).
6. Remove the air baffle (on page 23).
7. Remove the fan cage (on page 25).
8. Remove the mini-SAS cable connected to the system board, if installed.
9. Install the storage controller.

   For more information, see the documentation that ships with the option.
10. Connect the mini-SAS cable from the drive backplane to the controller card.

    For controller-specific instructions, see the controller documentation provided with the storage controller.
11. Install the fan cage.
12. Install the air baffle (on page 24).
13. Install the access panel (on page 22).
14. Do one of the following:
    - For tower models, return the server to an upright position.
    - For rack models, slide the server back into the rack.
15. Connect each power cord to the server.
16. Connect each power cord to the power source.
17. Press the Power On/Standby button.

    The server exits standby mode and applies full power to the system. The system power LED changes from amber to green.
18. Do one of the following:
    - For tower models, install the bezel.
    - For rack models, if removed, install the security bezel (on page 19).

For more information about the storage controller and its features, select the relevant controller user documentation on the Hewlett Packard Enterprise website (http://www.hpe.com/support/SAC_UG_ProLiantServers_en).

To configure arrays, see the user guide for Smart Array Controllers on the Hewlett Packard Enterprise website (http://www.hpe.com/support/CASAC_RG_en).

Installing the cache module and FBWC capacitor pack

CAUTION: The cache module connector does not use the industry-standard DDR3 mini-DIMMs. Do not use the controller with cache modules designed for other controller models, because the controller can malfunction and you can lose data. Also, do not transfer this cache module to an unsupported controller model, because you can lose data.

To install the component:

1. Do one of the following:
   - For tower models, open and remove the bezel ("Remove the tower bezel" on page 19).
   - For rack models, if installed, remove the security bezel (on page 19).
2. Power down the server (on page 18).
3. Remove all power:
   a. Disconnect each power cord from the power source.
   b. Disconnect each power cord from the server.
4. Do one of the following:
   - For tower models, place the server on a flat, level surface with the access panel facing up.
   - For rack models, extend the server from the rack (on page 22).
5. Remove the access panel (on page 21).
6. Remove the air baffle (on page 23).
7. Remove the fan cage (on page 25).
8. Install the cache module.

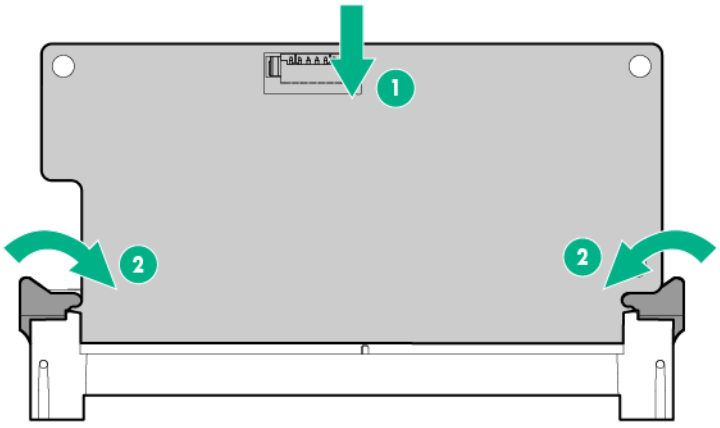

9. Install the capacitor pack into the server.
10. Store the extra cable near the capacitor pack.
11. Route the cable through the cable management clips, and then connect the cable using one of the following methods:

- Cache module on the system board

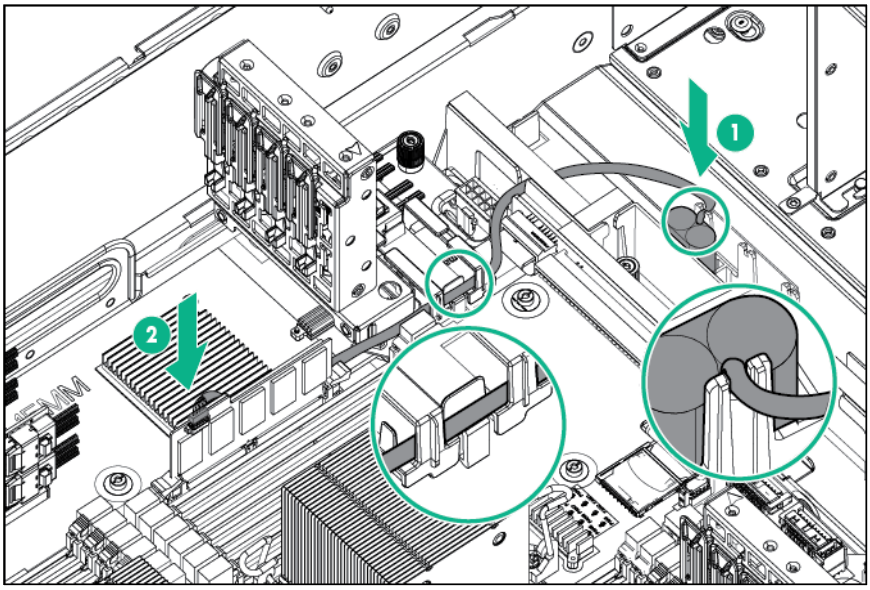

- Cache module on the Smart Array option

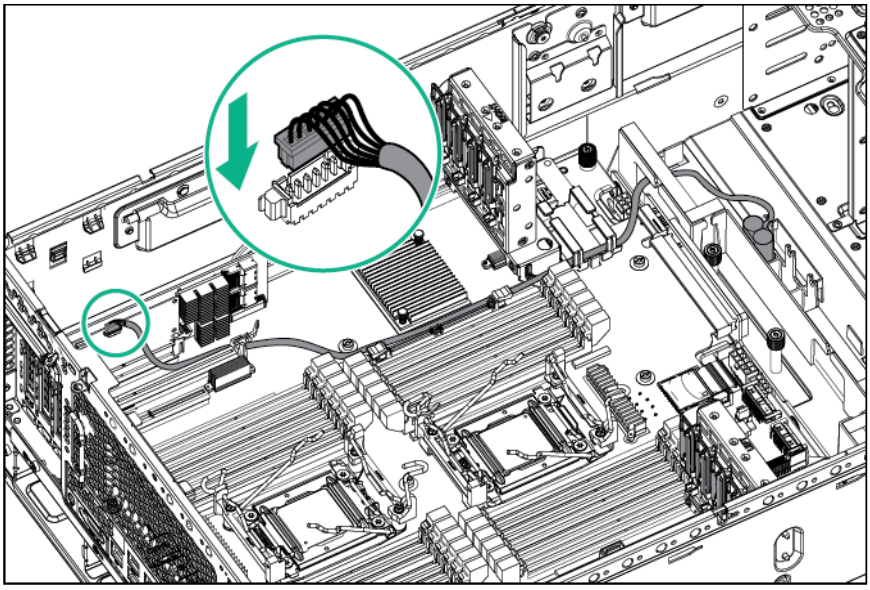

12. Install the fan cage.
13. Install the air baffle (on page 24).
14. Install the access panel (on page 22).
15. Do one of the following:
    - For tower models, return the server to an upright position.
    - For rack models, slide the server back into the rack.
16. Connect each power cord to the server.
17. Connect each power cord to the power source.
18. Press the Power On/Standby button.

    The server exits standby mode and applies full power to the system. The system power LED changes from amber to green.
19. Do one of the following:

- For tower models, install the bezel.
- For rack models, if removed, install the security bezel (on page 19).

Redundant fans option

Redundant fan guidelines

The server supports redundant fans to provide proper airflow to the system when a primary fan fails.

In the standard, nonredundant configuration, fans 2, 3, and 4 cool the server.

For the redundant configuration, fan 1 and four fan louvers are added to back up the primary fans. This configuration enables the server to continue operation in redundant mode, when a fan failure occurs. In a redundant fan configuration:

- If one fan fails, then the other three fans provide airflow.
- If two fans fail, then the server shuts down.

IMPORTANT: Fan louvers must be present for the redundant configuration. Without the louvers, all four fans are nonredundant.

NOTE: If your system is already installed with four fans, store the fan that is included in this kit as a spare.

Installing a hot-plug redundant fan

1. Press the Power On/Standby button.

   The server powers down and enters standby mode. The system power LED changes from green to amber. Power is still applied to the server.
2. Remove all power:
   a. Disconnect each power cord from the power source.
   b. Disconnect each power cord from the server.
3. If the server is in a tower configuration, do the following:
   a. Place the server on its side.

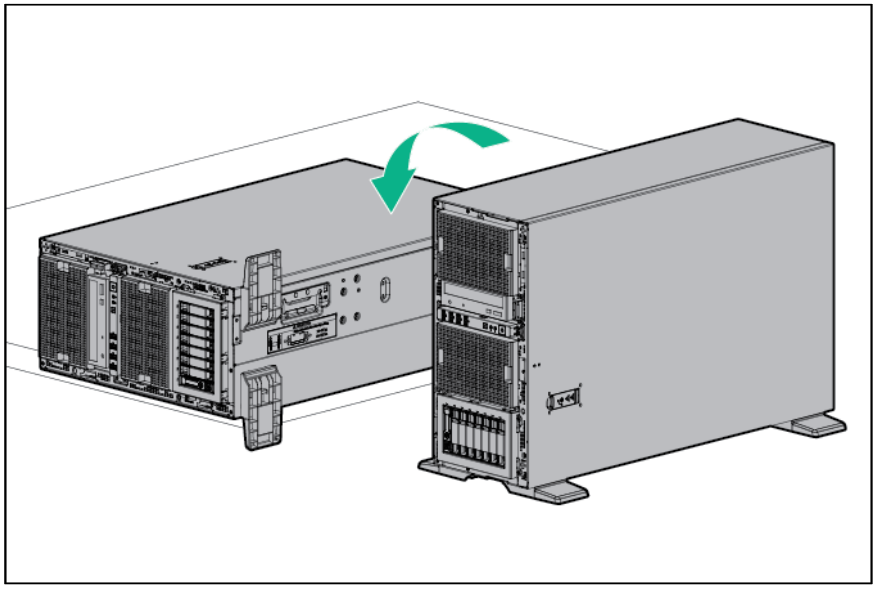

b. Open and remove the tower bezel.
c. Remove the access panel (on page 21).

4. If the server is in a rack configuration, do the following:
   a. Extend the server from the rack and place it on a flat, level work surface.
   b. Remove the access panel (on page 21).
5. Remove all the fans and fan blanks.

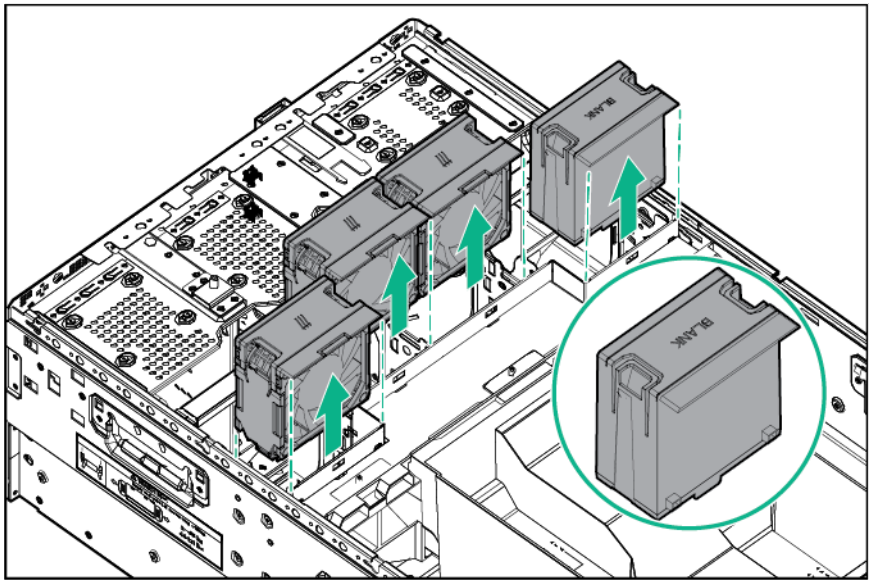

6. Install fan louvers.

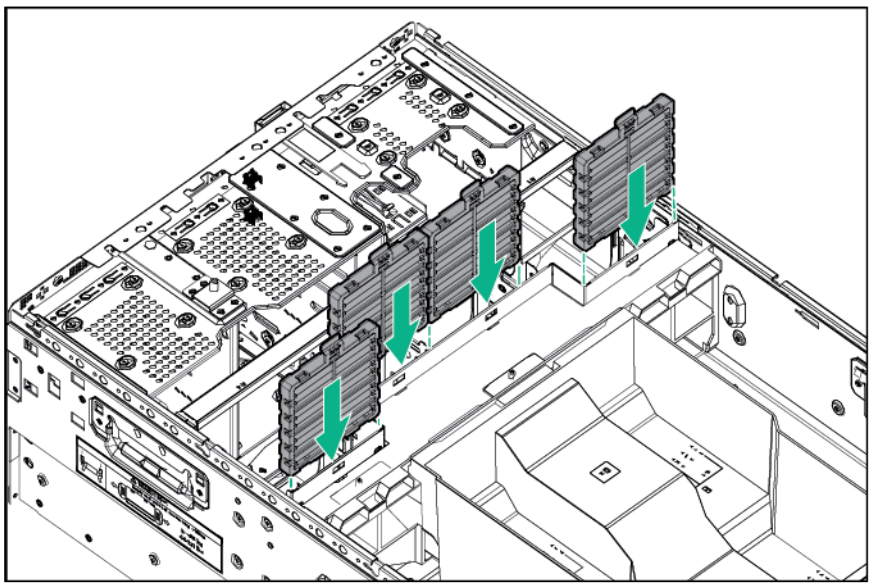

7. Remove the tab from each fan.

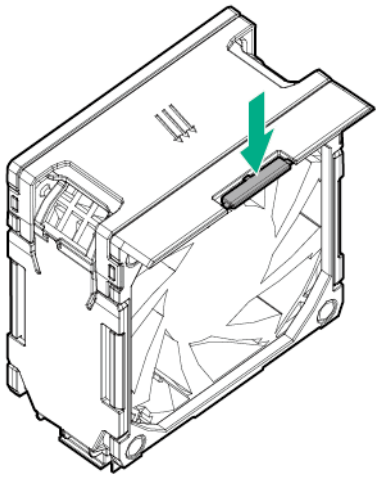

8. Install the fans, making sure the fans click into place.

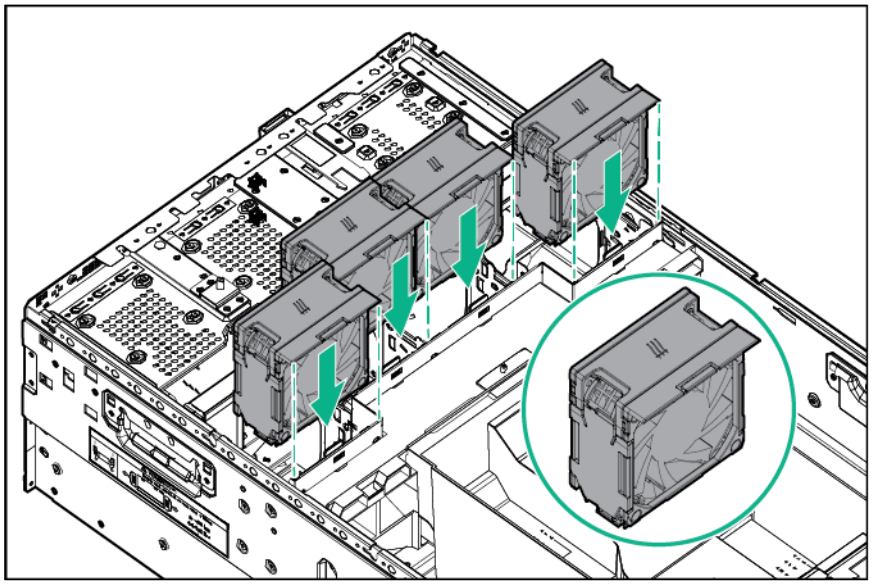

9. Install the PCIe air baffles.

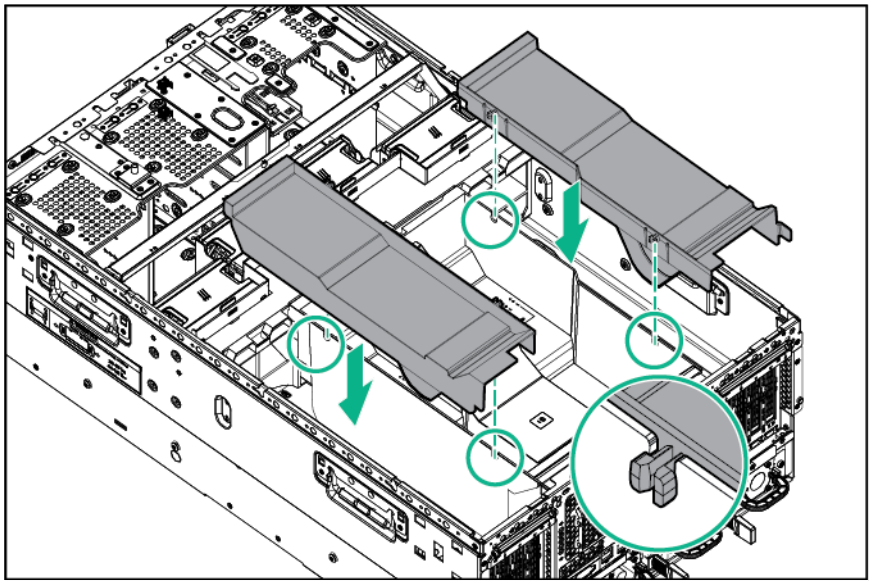

10. If the server is in a tower configuration, do the following:
    a. Install the access panel (on page 22).
    b. Install the bezel.
    c. Return the server to an upright position.
11. If the server is in a rack configuration, do the following:
    a. Install the access panel (on page 22).
    b. Install the server into the rack.
12. Connect each power cord to the server.
13. Connect each power cord to the power source.
14. Press the Power On/Standby button.
15. The server exits standby mode and applies full power to the system. The system power LED changes from amber to green.

Eight-bay SFF drive cage option

Install the optional eight-bay SFF drive cage in drive cage bay 2 or drive cage bay 3.

To install an additional eight-bay SFF drive cage, an optional SAS controller is required. To obtain the option, contact a Hewlett Packard Enterprise authorized reseller.

Installing the optional SFF hot-plug drive cage

1. Do one of the following:
    - For tower models, open and remove the bezel ("Remove the tower bezel" on page 19).
    - For rack models, if installed, remove the security bezel (on page 19).
2. Power down the server (on page 18).
3. Remove all power:
    a. Disconnect each power cord from the power source.
    b. Disconnect each power cord from the server.
4. For tower models, do the following:

a. Place the server on a flat, level surface with the access panel facing up.
b. Remove the access panel (on page 21).

5. For rack models, do the following:
   a. Extend the server from the rack (on page 22).
   b. Remove the access panel (on page 21).
   c. Release thumbscrews and remove the rack bezel ("Remove the rack bezel" on page 20).
6. Remove the blank from box 2 or box 3.

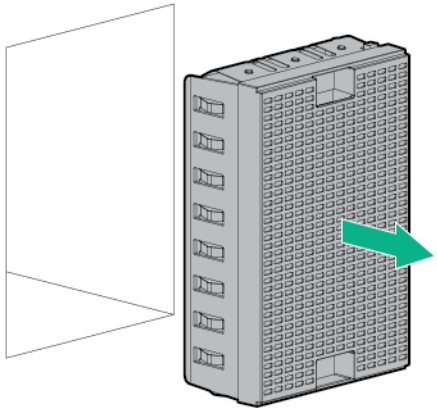

7. Install the optional SFF drive cage.

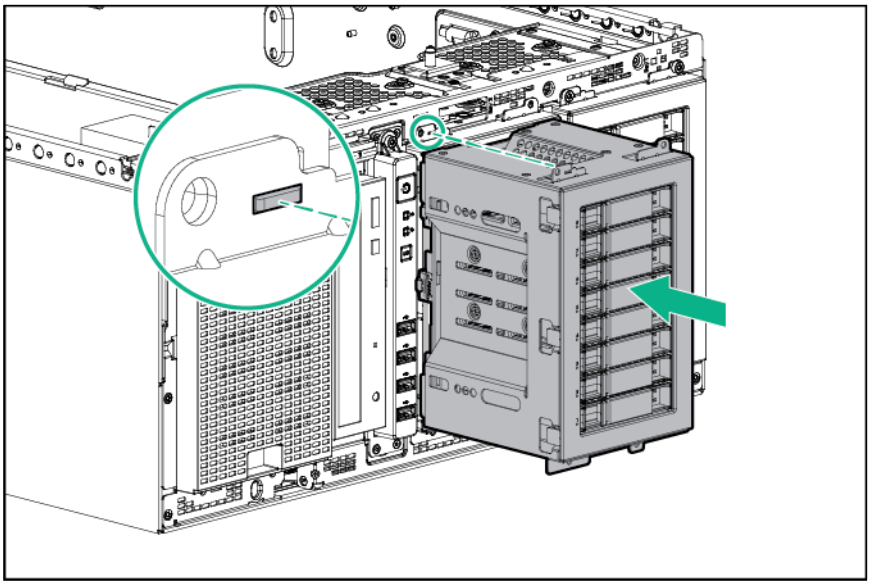

8. Using the T-15 screws, secure the optional SFF drive cage to the server.

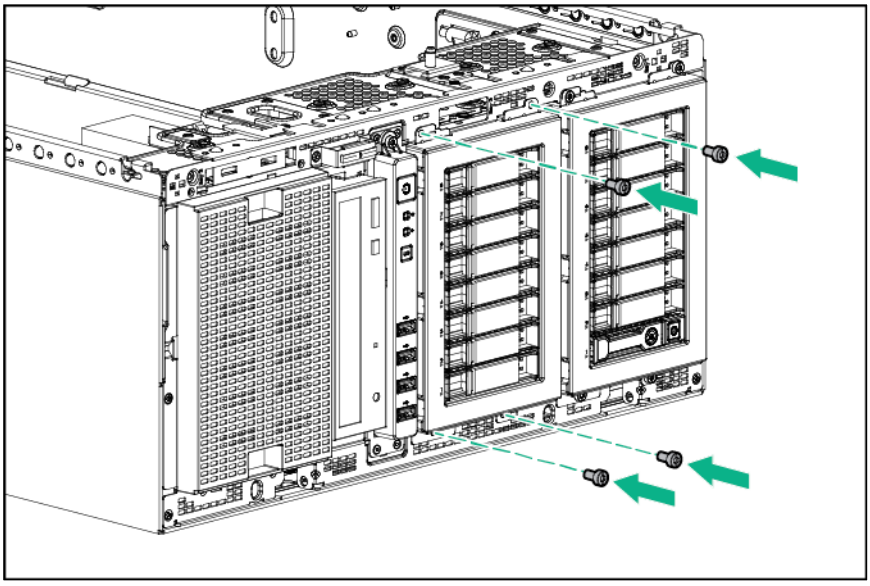

9. Remove the air baffle (on page 23).
10. Remove the fan cage (on page 25).
11. Connect the mini-SAS cables to the drive cage backplane option.

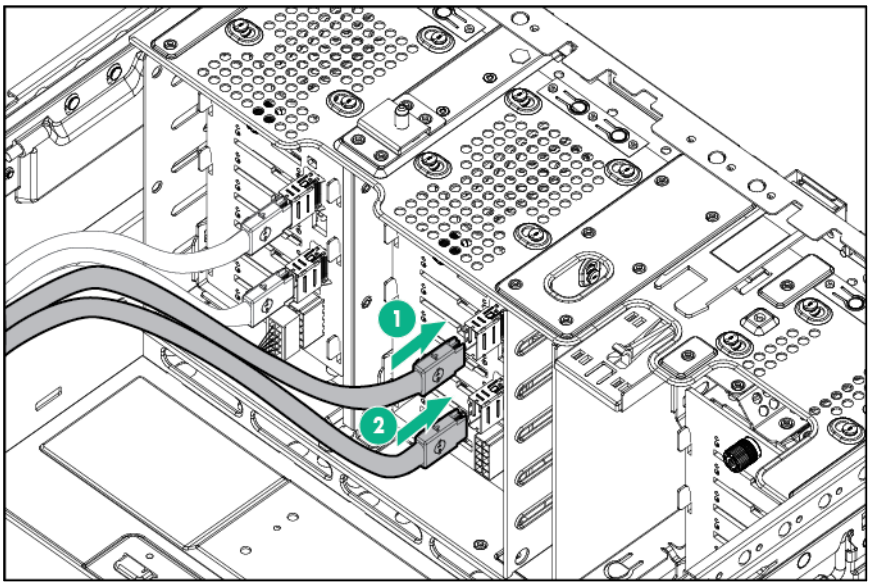

12. Connect the mini-SAS cables to the SAS controller option.

NOTE: For more information about connecting the cables to SAS controller option, see the documentation that ships with SAS controller option kit.

13. Connect the power cable to the system board connector appropriate for your configuration.

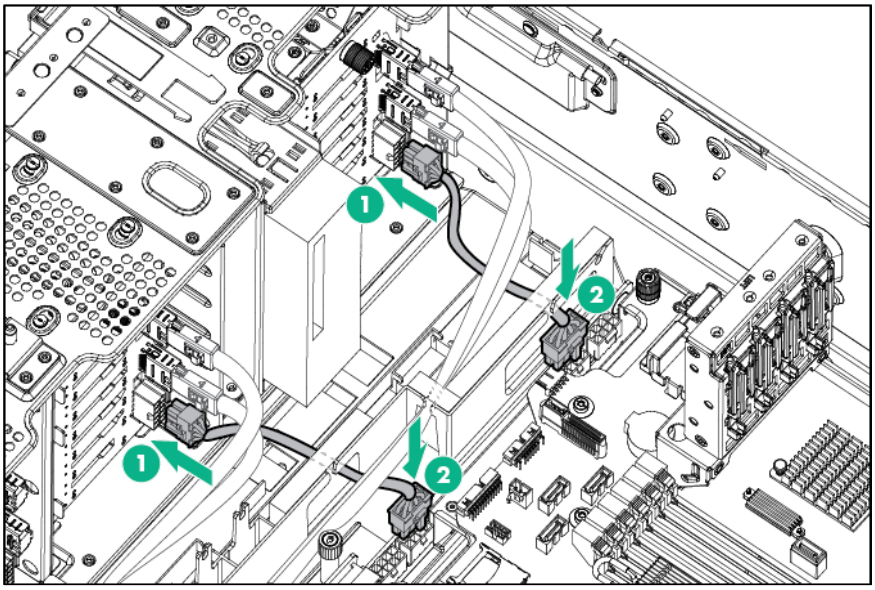

14. Install the fan cage.
15. Install the air baffle (on page 24).
16. For tower models, do the following:
    a. Install the access panel (on page 22).
    b. Return the server to an upright position.
17. For rack models, do the following:
    a. Install the rack bezel (on page 21).
    b. Install the access panel (on page 22).
    c. Slide the server back into the rack.
18. Connect each power cord to the server.
19. Connect each power cord to the power source.
20. Press the Power On/Standby button.

    The server exits standby mode and applies full power to the system. The system power LED changes from amber to green.
21. Do one of the following:
    - For tower models, install the bezel.
    - For rack models, if removed, install the security bezel (on page 19).

Six-bay LFF drive cage

To install a six-bay, LFF hot-plug drive cage in a server, a SAS controller option is required.

To obtain the SAS controller option, contact an authorized Hewlett Packard Enterprise reseller.

To install the SAS controller option, see the documentation that ships with SAS controller option kit.

Installing the optional LFF hot-plug drive cage

1. Do one of the following:
    - For tower models, open and remove the bezel ("Remove the tower bezel" on page 19).
    - For rack models, if installed, remove the security bezel (on page 19).

2. Power down the server (on page 18).
3. Remove all power:
   a. Disconnect each power cord from the power source.
   b. Disconnect each power cord from the server.
4. For tower models, do the following:
   a. Place the server on a flat, level surface with the access panel facing up.
   b. Remove the access panel (on page 21).
5. For rack models, do the following:
   a. Extend the server from the rack (on page 22).
   b. Remove the access panel (on page 21).
   c. Release thumbscrews and remove the rack bezel ("Remove the rack bezel" on page 20).
6. Remove the blank from box 2 or box 3.

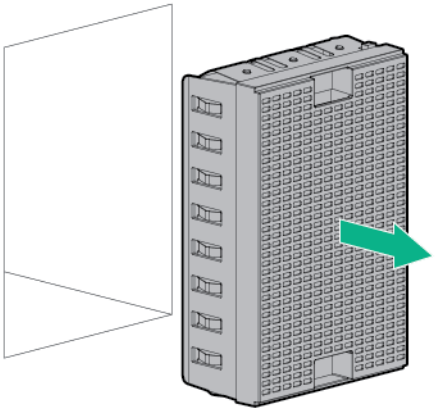

7. Install the optional LFF hot-plug drive cage.

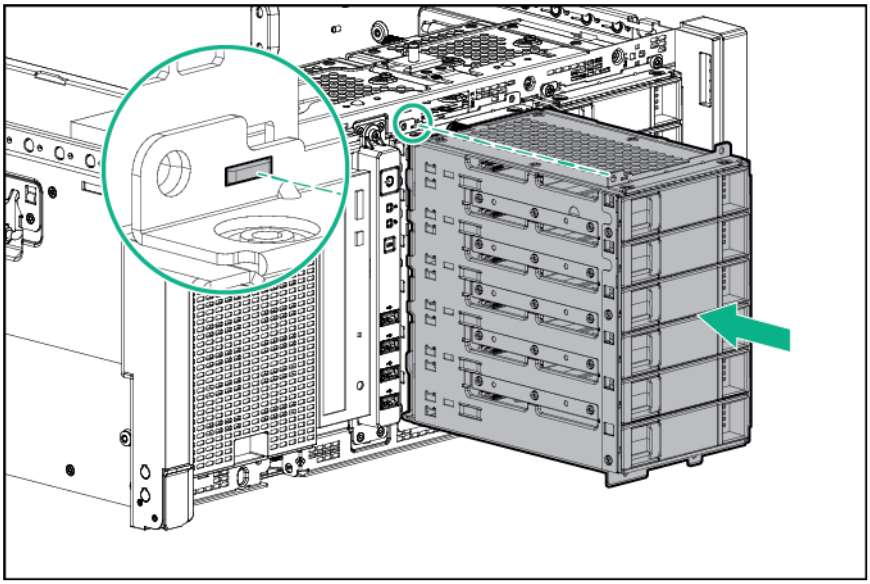

8. Using the T-15 screws, secure the optional LFF drive cage to the server.

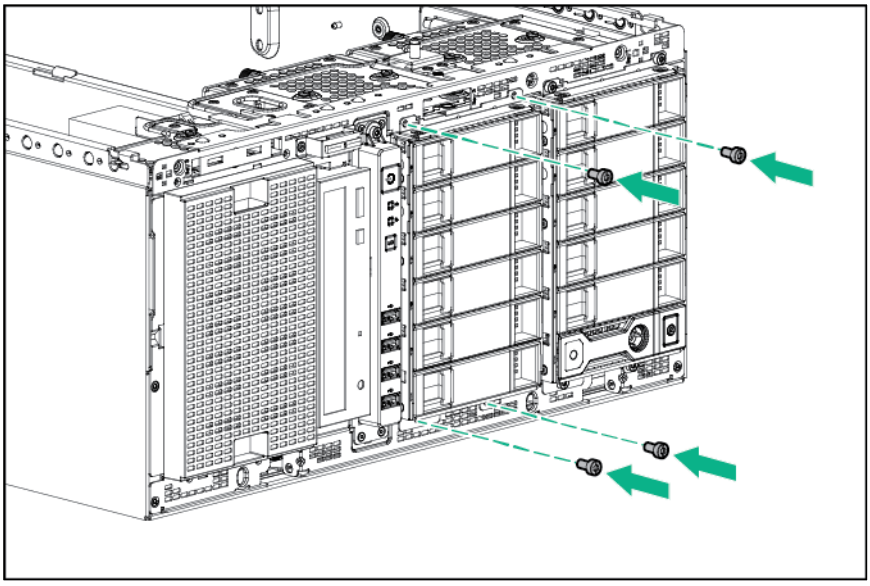

9. Remove the air baffle (on page 23).
10. Remove the fan cage (on page 25).
11. Connect the mini-SAS cables to the drive backplane option.

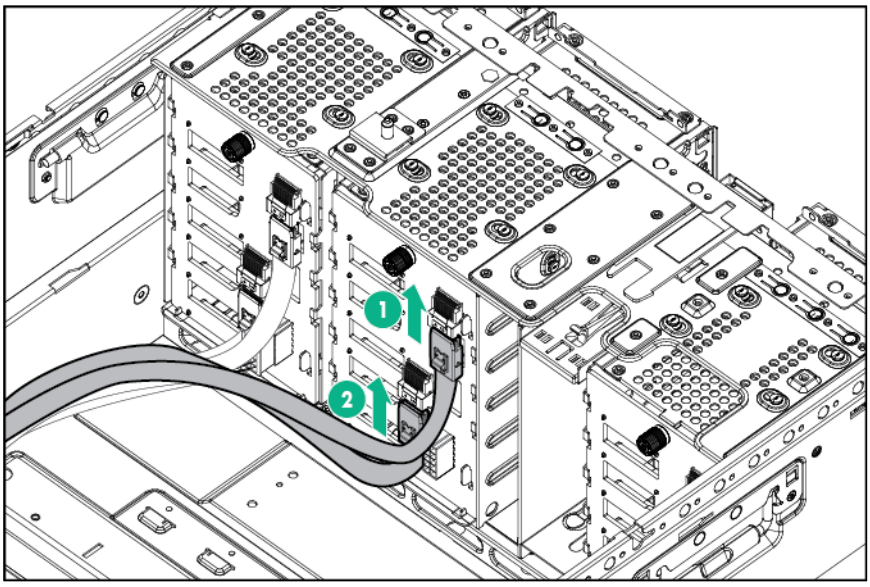

12. Connect the mini-SAS cables to the SAS controller option.

NOTE: For more information about connecting the cables to SAS controller option, see the documentation that ships with SAS controller option kit.

13. Connect the power cable to the appropriate connector on the system board for your configuration.

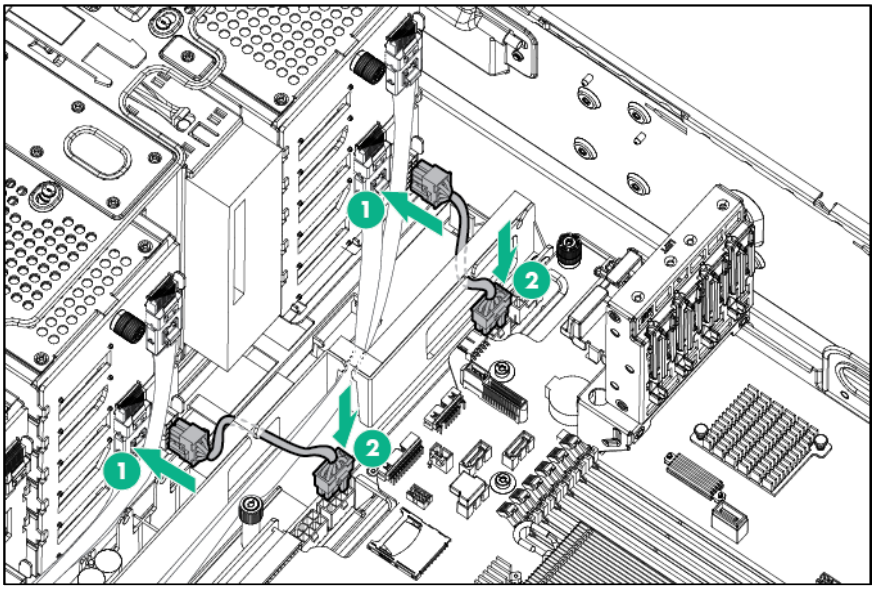

14. Install the fan cage.
15. Install the air baffle (on page 24).
16. For tower models, do the following:
    a. Install the access panel (on page 22).
    b. Return the server to an upright position.
17. For rack models, do the following:
    a. Install the rack bezel (on page 21).
    b. Install the access panel (on page 22).
    c. Slide the server back into the rack.
18. Connect each power cord to the server.
19. Connect each power cord to the power source.
20. Press the Power On/Standby button.

    The server exits standby mode and applies full power to the system. The system power LED changes from amber to green.
21. Do one of the following:
    - For tower models, install the bezel.
    - For rack models, if removed, install the security bezel (on page 19).

Drive backplane expander option

Before installing the backplane expander option kit, you must update the firmware on the HPE Smart Array P420 or P420i Controller to version 2.14 or higher. Download the latest firmware for the Smart Array P420 and P420i controllers from the Hewlett Packard Enterprise website (http://www.hpe.com/info/spp).

NOTE: The drive backplane expander options allow up to 18 LFF / 24 SFF drives to be managed under one single controller.

Installing the 6 bay LFF drive backplane expander

1. Do one of the following:

- For tower models, open and remove the bezel ("Remove the tower bezel" on page 19).
- For rack models, if installed, remove the security bezel (on page 19).

2. Power down the server (on page 18).
3. Remove all power:
   a. Disconnect each power cord from the power source.
   b. Disconnect each power cord from the server.
4. For tower models, do the following:
   a. Place the server on a flat, level surface with the access panel facing up.
   b. Remove the access panel (on page 21).
5. For rack models, do the following:
   a. Extend the server from the rack (on page 22).
   b. Remove the access panel (on page 21).
   c. Release thumbscrews and remove the rack bezel ("Remove the rack bezel" on page 20).
6. Remove the existing component cage cover for the LFF drive cage.

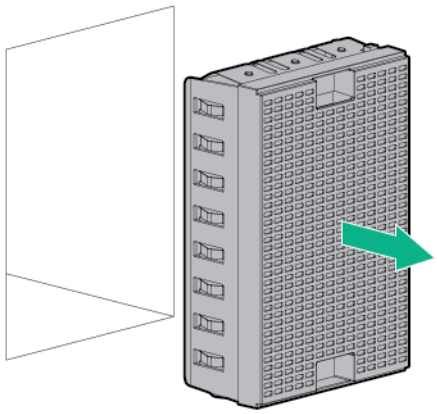

7. Install the LFF drive cage with backplane expander option halfway into the server.

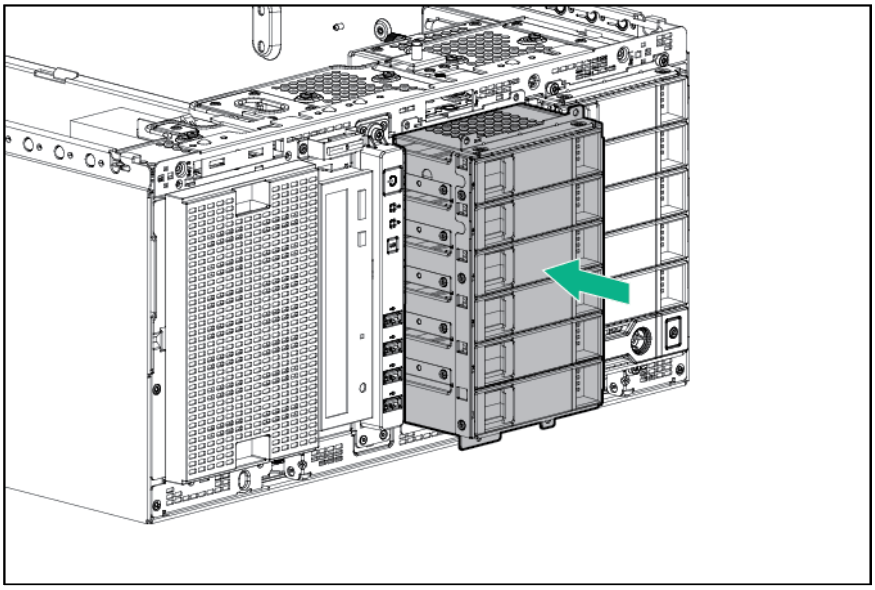

8. Remove the air baffle (on page 23).
9. Remove the fan cage (on page 25).
10. Connect the power cables from the backplane expander kit option to the power connectors on the system board.
    - Installing one backplane expander option

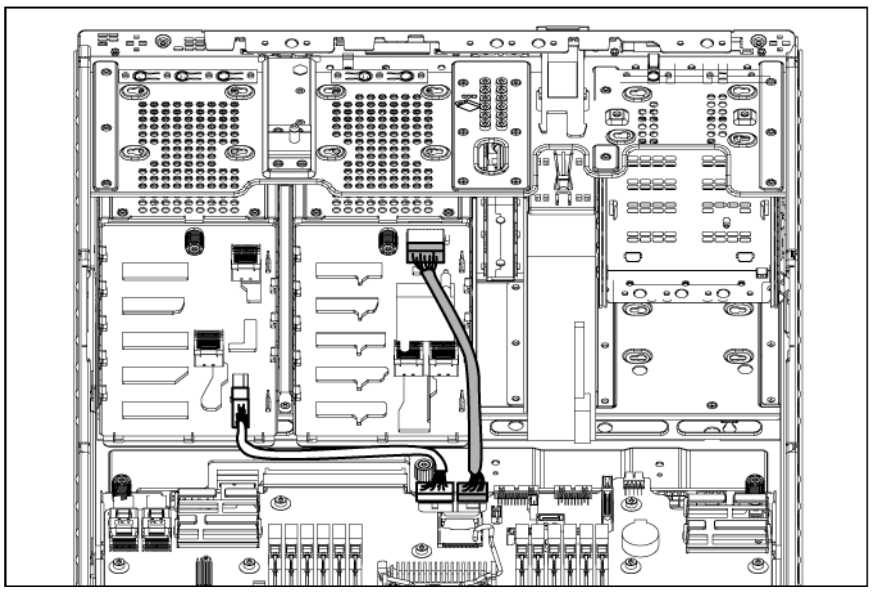

- Installing two backplanes with expander option

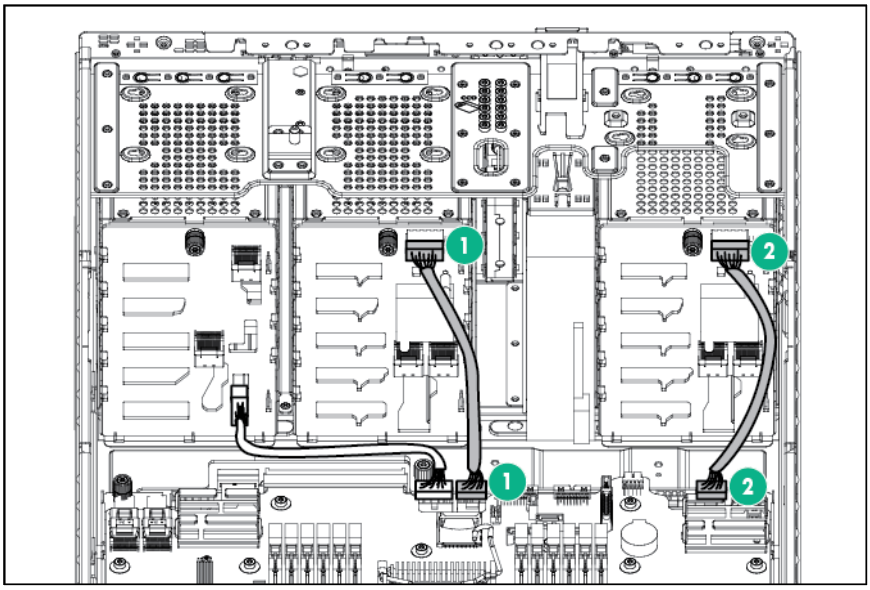

11. Disconnect all the existing mini-SAS cables from the server.
12. Connect the mini-SAS cables from the backplane expander option to the connectors on the system board.
    - Installing one backplane expander option

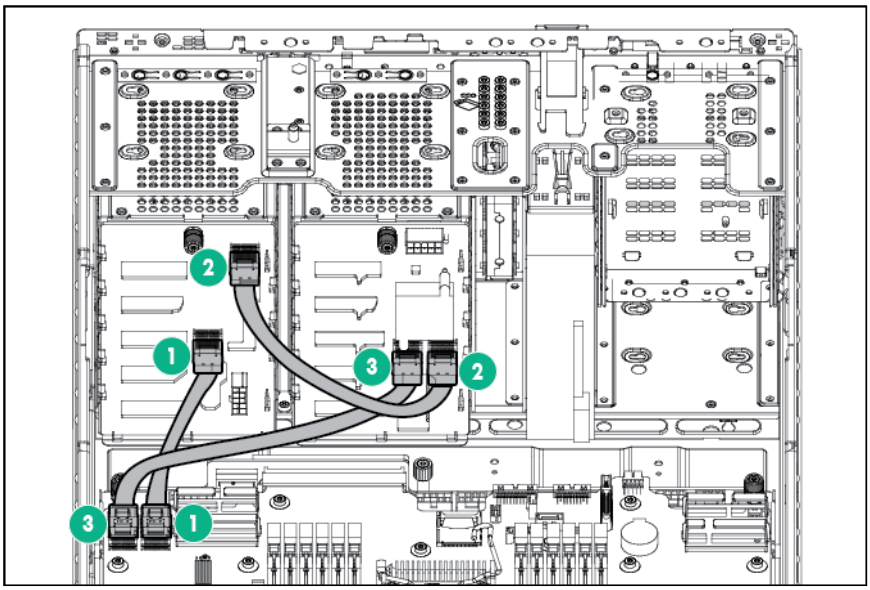

- Installing two backplanes with expander option

i. Connect the short mini-SAS cables.

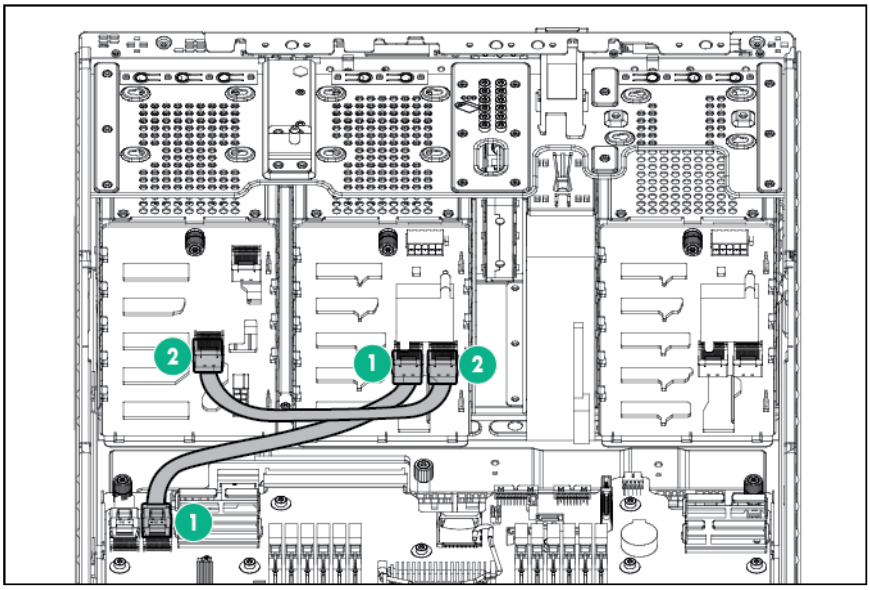

ii. Connect the long mini-SAS cables.

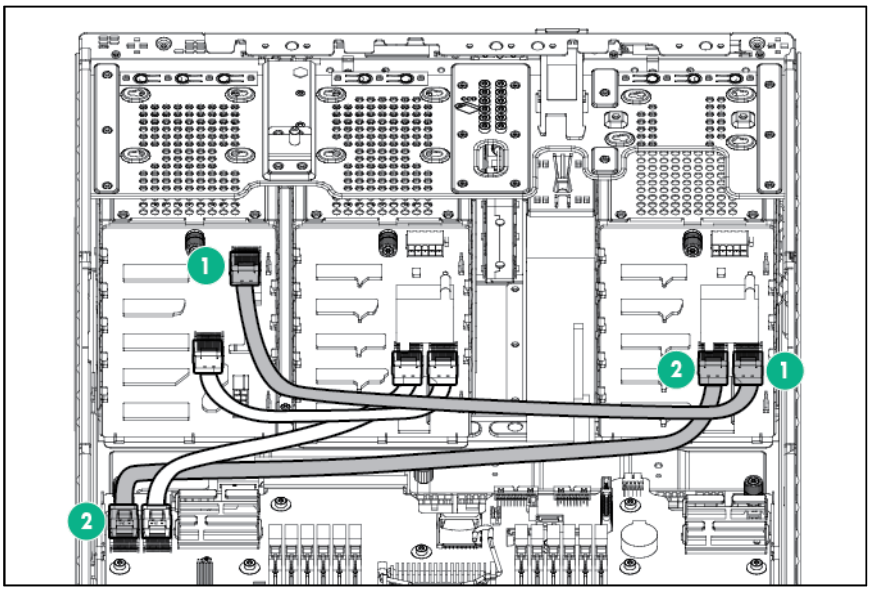

13. Fully install the LFF drive cage, and then secure it by tightening the T-15 screws.

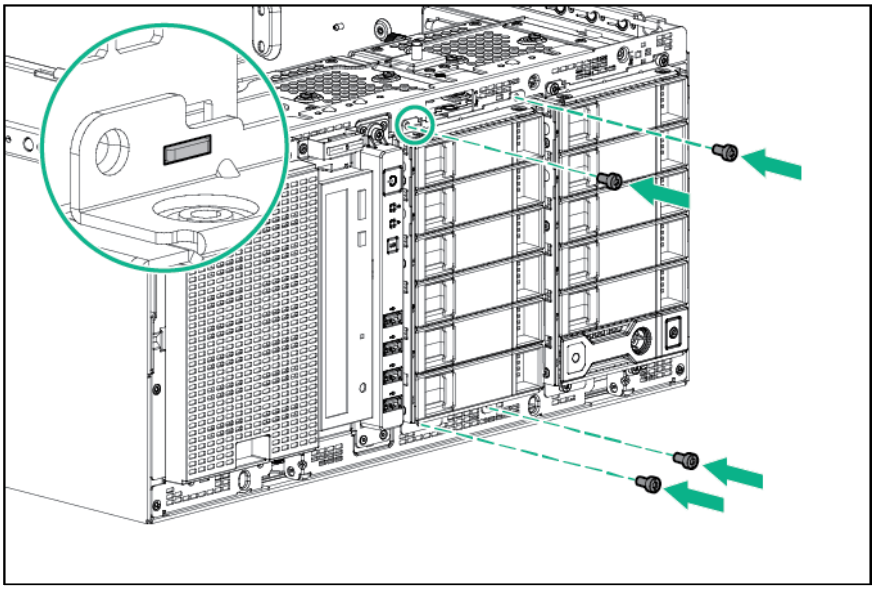

14. Install the fan cage.
15. Install the air baffle (on page 24).
16. For tower models, do the following:
    a. Install the access panel (on page 22).
    b. Return the server to an upright position.
17. For rack models, do the following:
    a. Install the rack bezel (on page 21).
    b. Install the access panel (on page 22).
    c. Slide the server back into the rack.
18. Connect each power cord to the server.
19. Connect each power cord to the power source.
20. Press the Power On/Standby button.

    The server exits standby mode and applies full power to the system. The system power LED changes from amber to green.
21. Do one of the following:
    - For tower models, install the bezel.
    - For rack models, if removed, install the security bezel (on page 19).

Installing the 8 bay SFF drive backplane expander

1. Do one of the following:
    - For tower models, open and remove the bezel ("Remove the tower bezel" on page 19).
    - For rack models, if installed, remove the security bezel (on page 19).
2. Power down the server (on page 18).
3. Remove all power:
    a. Disconnect each power cord from the power source.
    b. Disconnect each power cord from the server.
4. For tower models, do the following:

a. Place the server on a flat, level surface with the access panel facing up.
b. Remove the access panel (on page 21).

5. For rack models, do the following:
   a. Extend the server from the rack (on page 22).
   b. Remove the access panel (on page 21).
   c. Release thumbscrews and remove the rack bezel ("Remove the rack bezel" on page 20).
6. Remove the existing component cage cover for the SFF drive cage.

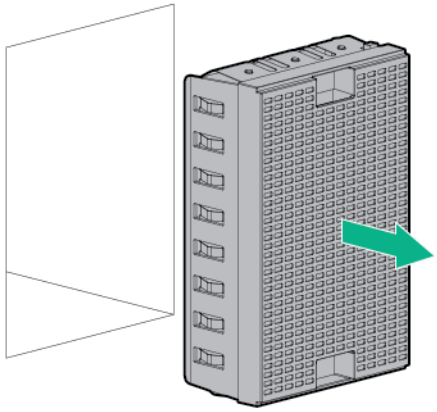

7. Install the SFF drive cage with backplane expander option halfway into the server.

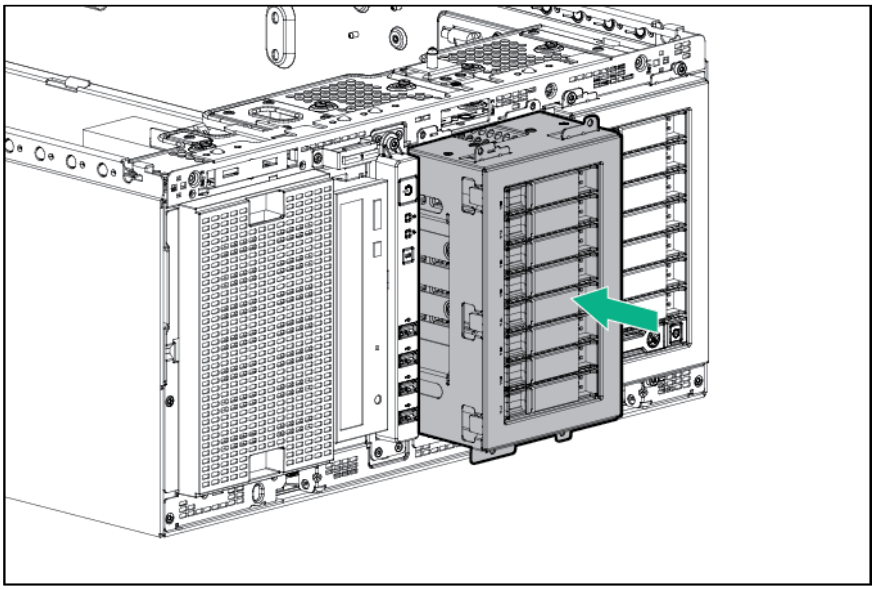

8. Remove the air baffle (on page 23).
9. Remove the fan cage (on page 25).
10. Connect the power cables from the backplane expander kit option to the power connectors on the system board.

- Installing one backplane expander option

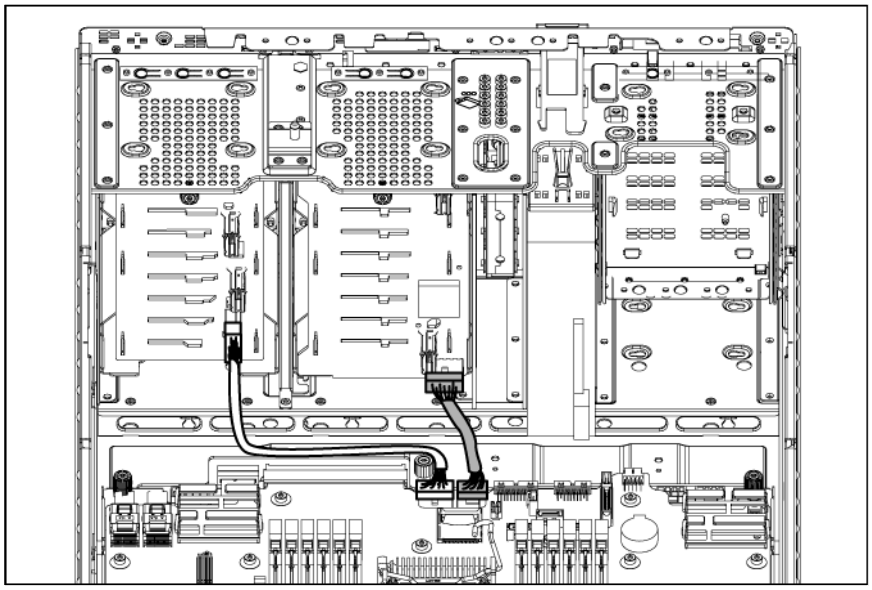

- Installing two backplanes with expander option

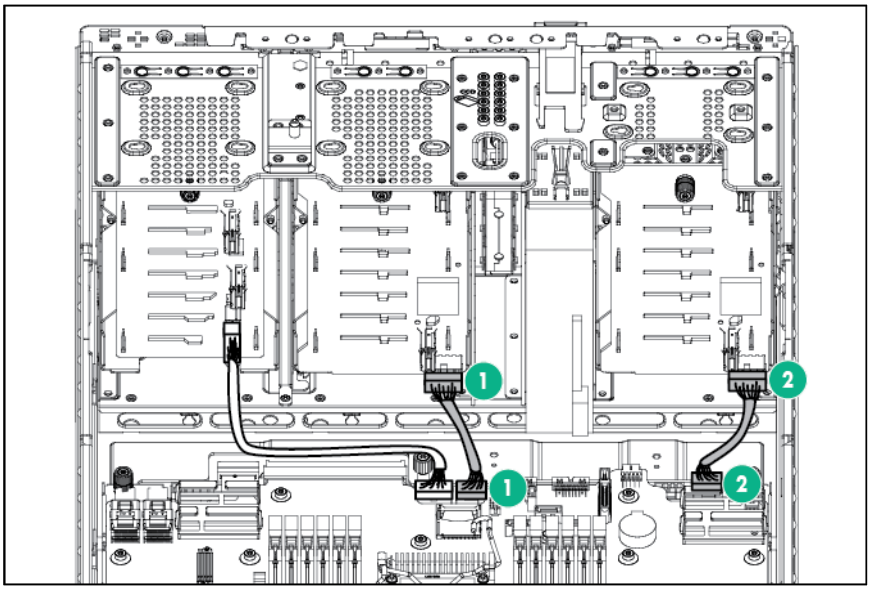

11. Disconnect all the existing mini-SAS cables from the server.
12. Connect the mini-SAS cables from the backplane expander option to the connectors on the system board.

- Installing one backplane expander option

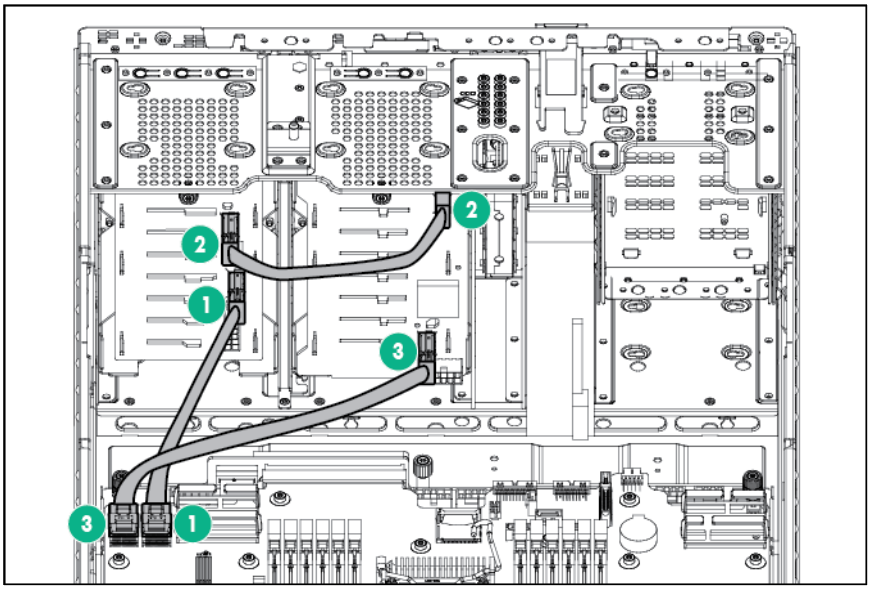

- Installing two backplanes with expander option
  i. Connect the short mini-SAS cables.

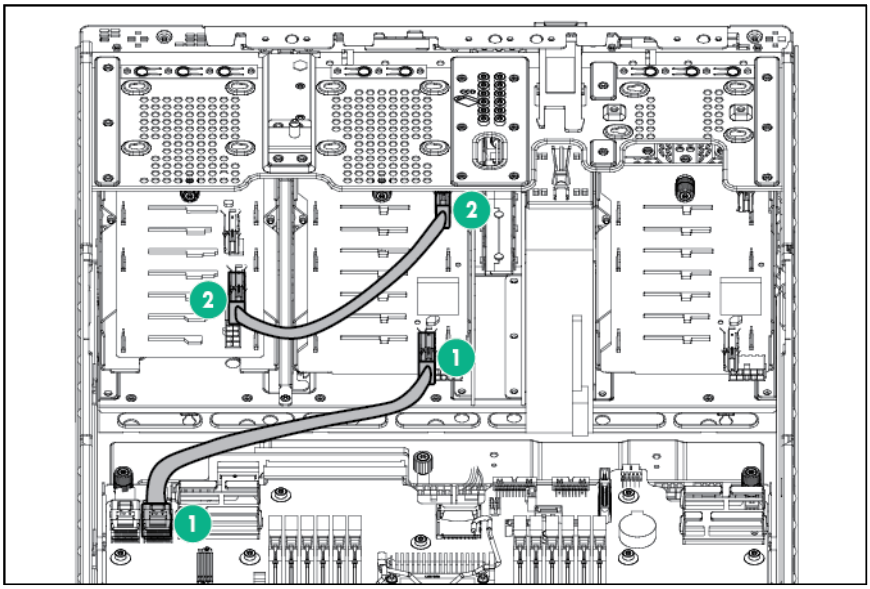

ii. Connect the long mini-SAS cables.

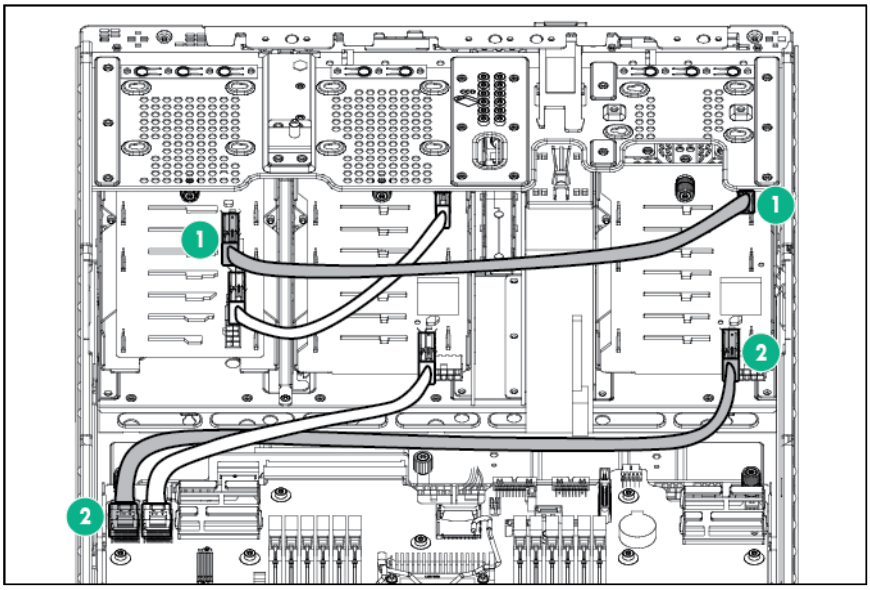

13. Fully install the SFF drive cage, and then secure it by tightening the T-15 screws.

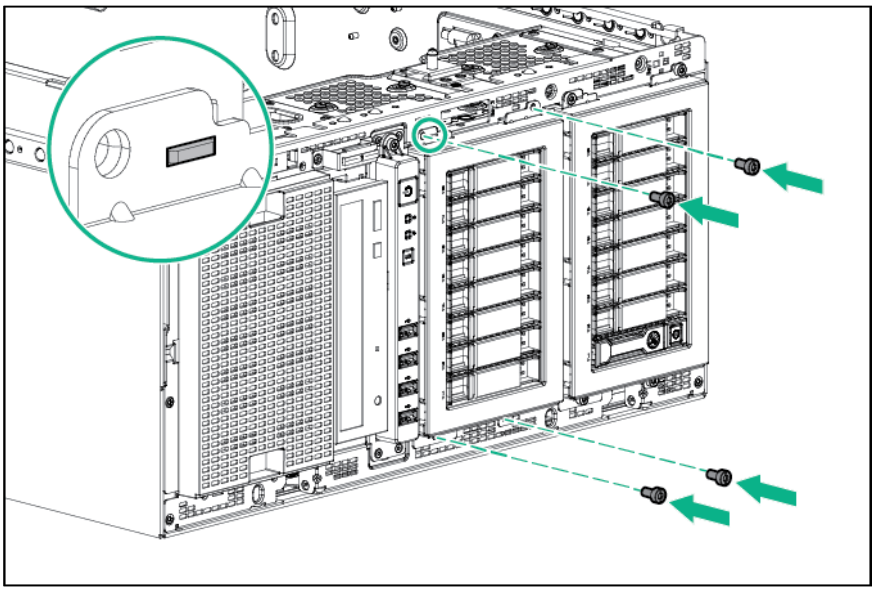

14. Install the fan cage.
15. Install the air baffle (on page 24).
16. For tower models, do the following:
    a. Install the access panel (on page 22).
    b. Return the server to an upright position.
17. For rack models, do the following:
    a. Install the rack bezel (on page 21).
    b. Install the access panel (on page 22).
    c. Slide the server back into the rack.
18. Connect each power cord to the server.
19. Connect each power cord to the power source.
20. Press the Power On/Standby button.

The server exits standby mode and applies full power to the system. The system power LED changes from amber to green.

21. Do one of the following:
    - For tower models, install the bezel.
    - For rack models, if removed, install the security bezel (on page 19).

HP Trusted Platform Module option

For more information about product features, specifications, options, configurations, and compatibility, see the product QuickSpecs on the Hewlett Packard Enterprise website (http://www.hpe.com/info/qs).

The TPM is not a customer-removable part.

CAUTION: Any attempt to remove an installed TPM from the system board breaks or disfigures the TPM security rivet. Upon locating a broken or disfigured rivet on an installed TPM, administrators should consider the system compromised and take appropriate measures to ensure the integrity of the system data.

If you suspect a TPM board failure, leave the TPM installed and remove the system board. Contact a Hewlett Packard Enterprise authorized service provider for a replacement system board and TPM board.

CAUTION: Always observe the guidelines in this document. Failure to follow these guidelines can cause hardware damage or halt data access.

When installing or replacing a TPM, observe the following guidelines:

- Do not remove an installed TPM. Once installed, the TPM becomes a permanent part of the system board.
- When installing or replacing hardware, Hewlett Packard Enterprise service providers cannot enable the TPM or the encryption technology. For security reasons, only the customer can enable these features.
- When returning a system board for service replacement, do not remove the TPM from the system board. When requested, Hewlett Packard Enterprise Service provides a TPM with the spare system board.
- Any attempt to remove an installed TPM from the system board breaks or disfigures the TPM security rivet. Upon locating a broken or disfigured rivet on an installed TPM, administrators should consider the system compromised and take appropriate measures to ensure the integrity of the system data.
- When using BitLocker, always retain the recovery key/password. The recovery key/password is required to enter Recovery Mode after BitLocker detects a possible compromise of system integrity.
- Hewlett Packard Enterprise is not liable for blocked data access caused by improper TPM use. For operating instructions, see the encryption technology feature documentation provided by the operating system.

Installing the Trusted Platform Module board

WARNING: To reduce the risk of personal injury, electric shock, or damage to the equipment, remove the power cord to remove power from the server. The front panel Power On/Standby button does not completely shut off system power. Portions of the power supply and some internal circuitry remain active until AC power is removed.

WARNING: To reduce the risk of personal injury from hot surfaces, allow the drives and the internal system components to cool before touching them.

1. Do one of the following:
   - For tower models, open and remove the bezel ("Remove the tower bezel" on page 19).
   - For rack models, if installed, remove the security bezel (on page 19).
2. Power down the server (on page 18).
3. Remove all power:
   a. Disconnect each power cord from the power source.
   b. Disconnect each power cord from the server.
4. Do one of the following:
   - For tower models, place the server on a flat, level surface with the access panel facing up.
   - For rack models, extend the server from the rack (on page 22).
5. Remove the access panel (on page 21).
6. Remove the air baffle (on page 23).
7. If installed, remove the PCI card from slot 9 ("System board components" on page 10).

CAUTION: Any attempt to remove an installed TPM from the system board breaks or disfigures the TPM security rivet. Upon locating a broken or disfigured rivet on an installed TPM, administrators should consider the system compromised and take appropriate measures to ensure the integrity of the system data.

8. Install the TPM board. Press down on the connector to seat the board ("System board components" on page 10).

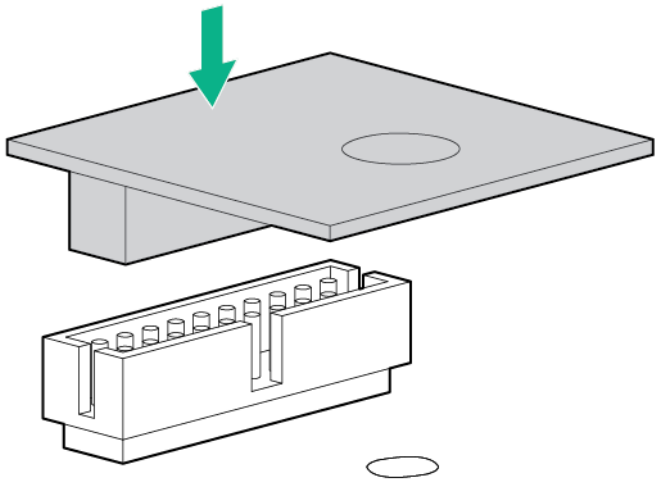

9. Install the TPM security rivet by pressing the rivet firmly into the system board.

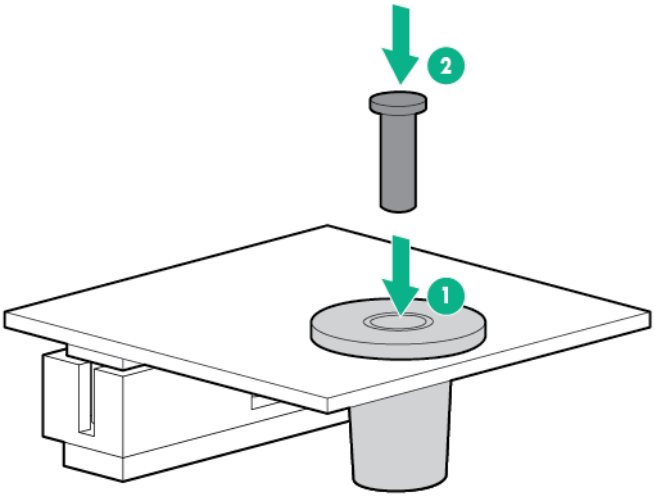

10. If removed, install the PCI card in slot 9.
11. Install the air baffle (on page 24).
12. Install the access panel (on page 22).
13. Do one of the following:
    - For tower models, return the server to an upright position.
    - For rack models, slide the server back into the rack.
14. Connect each power cord to the server.
15. Connect each power cord to the power source.
16. Press the Power On/Standby button.

    The server exits standby mode and applies full power to the system. The system power LED changes from amber to green.
17. Do one of the following:
    - For tower models, install the bezel.
    - For rack models, if removed, install the security bezel (on page 19).

Retaining the recovery key/password

The recovery key/password is generated during BitLocker setup, and can be saved and printed after BitLocker is enabled. When using BitLocker, always retain the recovery key/password. The recovery key/password is required to enter Recovery Mode after BitLocker detects a possible compromise of system integrity.

To help ensure maximum security, observe the following guidelines when retaining the recovery key/password:

- Always store the recovery key/password in multiple locations.
- Always store copies of the recovery key/password away from the server.
- Do not save the recovery key/password on the encrypted hard drive.

Enabling the Trusted Platform Module

1. When prompted during the start-up sequence, access RBSU by pressing the **F9** key.

2. From the Main Menu, select **Server Security**.
3. From the Server Security Menu, select **Trusted Platform Module**.
4. From the Trusted Platform Module Menu, select **TPM Functionality**.
5. Select **Enable**, and then press the **Enter** key to modify the TPM Functionality setting.
6. Press the **Esc** key to exit the current menu, or press the **F10** key to exit RBSU.
7. Reboot the server.
8. Enable the TPM in the OS. For OS-specific instructions, see the OS documentation.

△ **CAUTION:** When a TPM is installed and enabled on the server, data access is locked if you fail to follow the proper procedures for updating the system or option firmware, replacing the system board, replacing a hard drive, or modifying OS application TPM settings.

For more information on firmware updates and hardware procedures, see the *HP Trusted Platform Module Best Practices White Paper* on the Hewlett Packard Enterprise website (http://www.hpe.com/support/hpesc).

For more information on adjusting TPM usage in BitLocker™, see the Microsoft website (http://technet.microsoft.com/en-us/library/cc732774.aspx).

Cabling

Server data cabling

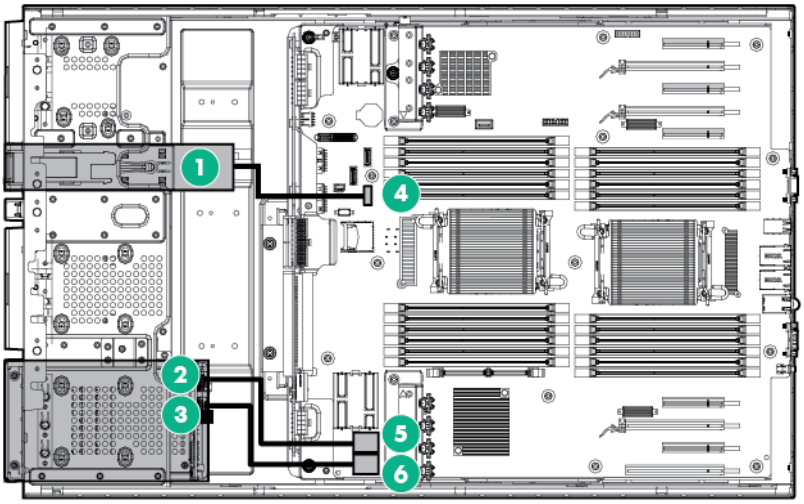

Item	Description
1	Optical drive connector
2	Drive cage 1, SAS connector 2
3	Drive cage 1, SAS connector 1
4	SATA connector
5	SAS connector
6	SAS connector

Media device data cabling

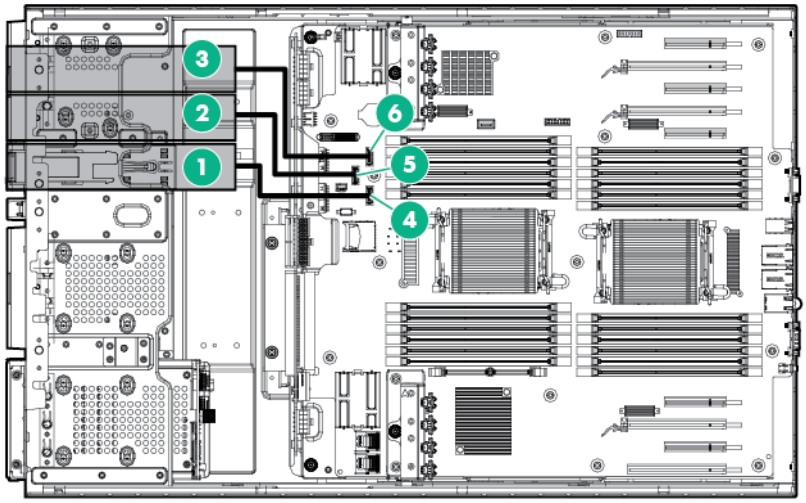

Item	Description
1	Optical drive connector
2	Optical drive connector
3	Optical drive connector
4	SATA connector
5	SATA connector
6	SATA connector

Optical drive cabling

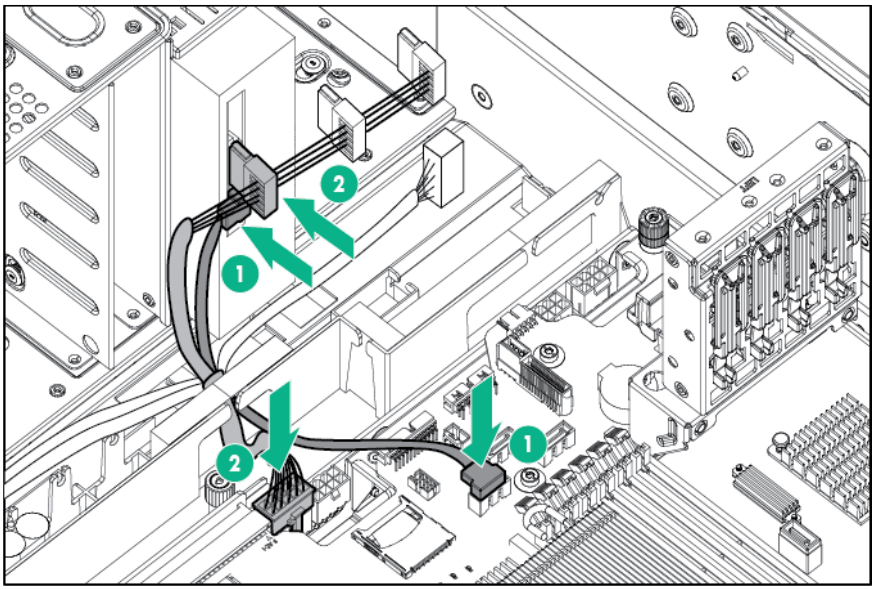

Software and configuration utilities

Server mode

The software and configuration utilities presented in this section operate in online mode, offline mode, or in both modes.

Software or configuration utility	Server mode
HPE iLO (on page 105)	Online and Offline
Active Health System (on page 106)	Online and Offline
Integrated Management Log (on page 107)	Online and Offline
Intelligent Provisioning (on page 107)	Offline
Insight Diagnostics ("HPE Insight Diagnostics" on page 108)	Online and Offline
Insight Remote Support software ("HPE Insight Remote Support" on page 108)	Online
Insight Online	Online
Erase Utility	Offline
Scripting Toolkit ("Scripting Toolkit for Windows and Linux" on page 108)	Online
Service Pack for ProLiant (on page 109)	Online and Offline
Smart Update Manager ("HP Smart Update Manager" on page 109)	Online and Offline
ROM-Based Setup Utility ("HPE ROM-Based Setup Utility" on page 109)	Offline
HPE Smart Storage Administrator (on page 111)	Online and Offline
Option ROM Configuration for Arrays (on page 112)	Offline
ROMPaq utility (on page 112)	Offline

Hewlett Packard Enterprise product QuickSpecs

For more information about product features, specifications, options, configurations, and compatibility, see the product QuickSpecs on the Hewlett Packard Enterprise website (http://www.hpe.com/info/qs).

HPE iLO Management

HPE iLO Management is a set of embedded management features supporting the complete lifecycle of the server, from initial deployment through ongoing management.

HPE iLO

The iLO 4 subsystem is a standard component of ProLiant servers that simplifies initial server setup, server health monitoring, power and thermal optimization, and remote server administration. The iLO 4 subsystem includes an intelligent microprocessor, secure memory, and a dedicated network interface. This design makes iLO 4 independent of the host server and its operating system.

iLO 4 enables and manages the Active Health System (on page 106) and also features Agentless Management. All key internal subsystems are monitored by iLO 4. If enabled, SNMP alerts are sent directly by iLO 4 regardless of the host operating system or even if no host operating system is installed.

Embedded remote support software is available on ProLiant Gen8 and later servers with iLO 4, regardless of the operating system software and without installing OS agents on the server.

Using iLO 4, you can do the following:

- Access a high-performance and secure Integrated Remote Console to the server from anywhere in the world if you have a network connection to the server.
- Use the shared .NET Integrated Remote Console to collaborate with up to four server administrators.
- Remotely mount high-performance Virtual Media devices to the server.
- Securely and remotely control the power state of the managed server.
- Implement true Agentless Management with SNMP alerts from iLO, regardless of the state of the host server.
- Download the Active Health System log.
- Register for HPE Insight Remote Support.
- Use iLO Federation to manage multiple servers from one system running the iLO web interface.
- Use Virtual Power and Virtual Media from the GUI, the CLI, or the iLO scripting toolkit for many tasks, including the automation of deployment and provisioning.
- Control iLO by using a remote management tool.

For more information about iLO 4 features, see the iLO 4 documentation on the Documentation CD or on the Hewlett Packard Enterprise website (http://www.hpe.com/info/ilo/docs).

Active Health System

The HPE Active Health System provides the following features:

- Combined diagnostics tools/scanners
- Always on, continuous monitoring for increased stability and shorter downtimes
- Rich configuration history
- Health and service alerts
- Easy export and upload to Service and Support

The Active Health System monitors and records changes in the server hardware and system configuration. The Active Health System assists in diagnosing problems and delivering rapid resolution if server failures occur.

The Active Health System collects the following types of data:

- Server model
- Serial number
- Processor model and speed
- Storage capacity and speed
- Memory capacity and speed
- Firmware/BIOS

Active Health System does not collect information about Active Health System users' operations, finances, customers, employees, partners, or data center, such as IP addresses, host names, user names, and passwords. Active Health System does not parse or change operating system data from third-party error event log activities, such as content created or passed through by the operating system.

The data that is collected is managed according to the Hewlett Packard Enterprise Data Privacy policy. For more information see the Hewlett Packard Enterprise website (http://www.hpe.com/info/privacy).

The Active Health System, in conjunction with the system monitoring provided by Agentless Management or SNMP Pass-thru, provides continuous monitoring of hardware and configuration changes, system status, and service alerts for various server components.

The Agentless Management Service is available in the SPP, which can be downloaded from the Hewlett Packard Enterprise website (http://www.hpe.com/servers/spp/download). The Active Health System log can be downloaded manually from iLO 4 or HPE Intelligent Provisioning and sent to Hewlett Packard Enterprise.

For more information, see the following documents:

- *iLO User Guide* on the Hewlett Packard Enterprise website (http://www.hpe.com/info/enterprise/docs)
- *Intelligent Provisioning User Guide* on the Hewlett Packard Enterprise website (http://www.hpe.com/info/enterprise/docs)

Integrated Management Log

The IML records hundreds of events and stores them in an easy-to-view form. The IML timestamps each event with 1-minute granularity.

You can view recorded events in the IML in several ways, including the following:

- From within HPE SIM
- From within operating system-specific IML viewers:
  - For Windows: IML Viewer
  - For Linux: IML Viewer Application
- From within the iLO 4 web interface
- From within Insight Diagnostics ("HPE Insight Diagnostics" on page 108)

Intelligent Provisioning

Several packaging changes have taken place with ProLiant Gen8 servers: SmartStart CDs and the Smart Update Firmware DVD no longer ship with these new servers. Instead, the deployment capability is embedded in the server as part of Intelligent Provisioning.

Intelligent Provisioning is a single-server deployment tool embedded in ProLiant Gen8 and later servers that simplifies ProLiant server setup, providing a reliable and consistent way to deploy ProLiant server configurations:

- Intelligent Provisioning assists with the OS installation process by preparing the system for installing "off-the-shelf" and Hewlett Packard Enterprise branded versions of operating system software and integrating optimized ProLiant server support software.
- Intelligent Provisioning provides maintenance-related tasks using the Perform Maintenance window.
- Intelligent Provisioning provides installation help for Microsoft Windows, Red Hat and SUSE Linux, and VMware operating systems. For specific OS support, see the *Intelligent Provisioning Release Notes* on the Hewlett Packard Enterprise website (http://www.hpe.com/info/intelligentprovisioning/docs).

For more information about Intelligent Provisioning software, see the Hewlett Packard Enterprise website (http://www.hpe.com/info/intelligentprovisioning/docs). For Intelligent Provisioning recovery media downloads, see the Resources tab on the Hewlett Packard Enterprise website (http://www.hpe.com/info/ilo). For consolidated drive and firmware update packages, see the Smart Update: Server Firmware and Driver Updates page on the Hewlett Packard Enterprise website (http://www.hpe.com/info/SmartUpdate/docs).

HPE Insight Diagnostics

The Insight Diagnostics is a proactive server management tool, available in both offline and online versions, that provides diagnostics and troubleshooting capabilities to assist IT administrators who verify server installations, troubleshoot problems, and perform repair validation.

The Insight Diagnostics Offline Edition performs various in-depth system and component testing while the OS is not running. To run this utility, boot the server using Intelligent Provisioning (on page 107).

The Insight Diagnostics Online Edition is a web-based application that captures system configuration and other related data needed for effective server management. Available in Microsoft Windows and Linux versions, the utility helps to ensure proper system operation.

For more information or to download the utility, see the Hewlett Packard Enterprise website (http://www.hpe.com/info/InsightDiagnostics). The Insight Diagnostics Online Edition is also available in the SPP ("Service Pack for ProLiant" on page 109).

HPE Insight Diagnostics survey functionality

HPE Insight Diagnostics (on page 108) provides survey functionality that gathers critical hardware and software information on ProLiant servers.

This functionality supports operating systems that are supported by the server. For operating systems supported by the server, see the Hewlett Packard Enterprise website (http://www.hpe.com/info/supportos).

If a significant change occurs between data-gathering intervals, the survey function marks the previous information and overwrites the survey data files to reflect the latest changes in the configuration.

Survey functionality is installed with every Intelligent Provisioning-assisted Insight Diagnostics installation, or it can be installed through the SPP ("Service Pack for ProLiant" on page 109).

HPE Insight Remote Support

Hewlett Packard Enterprise strongly recommends that you register your device for remote support to enable enhanced delivery of your Hewlett Packard Enterprise warranty, HPE support services, or Hewlett Packard Enterprise contractual support agreement. Insight Remote Support supplements your monitoring continuously to ensure maximum system availability by providing intelligent event diagnosis, and automatic, secure submission of hardware event notifications to Hewlett Packard Enterprise, which will initiate a fast and accurate resolution, based on your product's service level. Notifications can be sent to your authorized Hewlett Packard Enterprise Channel Partner for onsite service, if configured and available in your country.

For more information, see *Insight Remote Support and Insight Online Setup Guide for ProLiant Servers and BladeSystem c-Class Enclosures* on the Hewlett Packard Enterprise website (http://www.hpe.com/info/insightremotesupport/docs). Insight Remote Support is available as part of Hewlett Packard Enterprise Warranty, HPE support services, or Hewlett Packard Enterprise contractual support agreement.

Scripting Toolkit for Windows and Linux

The Scripting Toolkit for Windows and Linux is a server deployment product that delivers an unattended automated installation for high-volume server deployments. The Scripting Toolkit is designed to support ProLiant BL, ML, DL, SL, and XL servers. The toolkit includes a modular set of utilities and important documentation that describes how to apply these tools to build an automated server deployment process.

The Scripting Toolkit provides a flexible way to create standard server configuration scripts. These scripts are used to automate many of the manual steps in the server configuration process. This automated server configuration process cuts time from each deployment, making it possible to scale rapid, high-volume server deployments.

For more information, and to download the Scripting Toolkit, see the Hewlett Packard Enterprise website (http://www.hpe.com/support/STK).

Service Pack for ProLiant

The SPP is a comprehensive systems software (drivers and firmware) solution delivered as a single package with major server releases. This solution uses HP SUM as the deployment tool and is tested on all supported ProLiant servers including ProLiant Gen8 and later servers.

SPP can be used in an online mode on a Windows or Linux hosted operating system, or in an offline mode where the server is booted to an operating system included on the ISO file so that the server can be updated automatically with no user interaction or updated in interactive mode.

For more information or to download SPP, see one of the following pages on the Hewlett Packard Enterprise website:

- Service Pack for ProLiant download page (http://www.hpe.com/info/spp/docs)
- Smart Update: Server Firmware and Driver Updates page (http://www.hpe.com/info/SmartUpdate/docs)

HP Smart Update Manager

HP SUM is a product used to install and update firmware, drivers, and systems software on ProLiant servers. The HP SUM provides a GUI and a command-line scriptable interface for deployment of systems software for single or one-to-many ProLiant servers and network-based targets, such as iLOs, OAs, and VC Ethernet and Fibre Channel modules.

For more information about HP SUM, see the product page on the Hewlett Packard Enterprise website (http://www.hpe.com/info/hpsum).

To download HP SUM, see the Hewlett Packard Enterprise website (http://www.hpe.com/info/hpsum/download).

To access the *HP Smart Update Manager User Guide*, see the HP SUM Information Library (http://www.hpe.com/info/hpsum/documentation).

HPE ROM-Based Setup Utility

RBSU is a configuration utility embedded in HPE ProLiant servers that performs a wide range of configuration activities that can include the following:

- Configuring system devices and installed options
- Enabling and disabling system features
- Displaying system information
- Selecting the primary boot controller
- Configuring memory options
- Language selection

For more information on RBSU, see the *ROM-Based Setup Utility User Guide* on the Documentation CD or the RBSU Information Library (http://www.hpe.com/info/rbsu/docs).

Using RBSU

To use RBSU, use the following keys:

- To access RBSU, press the **F9** key during power-up when prompted.

- To navigate the menu system, use the arrow keys.
- To make selections, press the **Enter** key.
- To access Help for a highlighted configuration option, press the **F1** key.

IMPORTANT: RBSU automatically saves settings when you press the **Enter** key. The utility does not prompt you for confirmation of settings before you exit the utility. To change a selected setting, you must select a different setting and press the **Enter** key.

Default configuration settings are applied to the server at one of the following times:

- Upon the first system power-up
- After defaults have been restored

Default configuration settings are sufficient for proper typical server operation, but configuration settings can be modified using RBSU. The system will prompt you for access to RBSU with each power-up.

Auto-configuration process

The auto-configuration process automatically runs when you boot the server for the first time. During the power-up sequence, the system ROM automatically configures the entire system without needing any intervention. During this process, the ORCA utility, in most cases, automatically configures the array to a default setting based on the number of drives connected to the server.

NOTE: If the boot drive is not empty or has been written to in the past, ORCA does not automatically configure the array. You must run ORCA to configure the array settings.

NOTE: The server may not support all the following examples.

Drives installed	Drives used	RAID level
1	1	RAID 0
2	2	RAID 1
3, 4, 5, or 6	3, 4, 5, or 6	RAID 5
More than 6	0	None

To change any ORCA default settings and override the auto-configuration process, press the **F8** key when prompted.

For more information on RBSU, see the *ROM-Based Setup Utility User Guide* on the Documentation CD or the RBSU Information Library (http://www.hpe.com/info/rbsu/docs).

Boot options

Near the end of the boot process, the boot options screen is displayed. This screen is visible for several seconds before the system attempts to boot from a supported boot device. During this time, you can do the following:

- Access RBSU by pressing the **F9** key.
- Access Intelligent Provisioning Maintenance Menu by pressing the **F10** key.
- Access the boot menu by pressing the **F11** key.
- Force a PXE Network boot by pressing the **F12** key.

Configuring AMP modes

Not all ProLiant servers support all AMP modes. RBSU provides menu options only for the modes supported by the server. Advanced memory protection within RBSU enables the following advanced memory modes:

- Advanced ECC Mode—Provides memory protection beyond Standard ECC. All single-bit failures and some multi-bit failures can be corrected without resulting in system downtime.
- Online Spare Mode—Provides protection against failing or degraded DIMMs. Certain memory is set aside as spare, and automatic failover to spare memory occurs when the system detects a degraded DIMM. DIMMs that are likely to receive a fatal or uncorrectable memory error are removed from operation automatically, resulting in less system downtime.

For DIMM population requirements, see the server-specific user guide.

Re-entering the server serial number and product ID

After you replace the system board, you must re-enter the server serial number and the product ID.

1. During the server startup sequence, press the **F9** key to access RBSU.
2. Select the **Advanced Options** menu.
3. Select **Service Options**.
4. Select **Serial Number**. The following warning appears:

   ```
   Warning: The serial number should ONLY be modified by qualified service personnel. This value should always match the serial number located on the chassis.
   ```
5. Press the **Enter** key to clear the warning.
6. Enter the serial number and press the **Enter** key.
7. Select **Product ID**. The following warning appears:

   ```
   Warning: The Product ID should ONLY be modified by qualified service personnel. This value should always match the Product ID located on the chassis.
   ```
8. Enter the product ID and press the **Enter** key.
9. Press the **Esc** key to close the menu.
10. Press the **Esc** key to exit RBSU.
11. Press the **F10** key to confirm exiting RBSU. The server automatically reboots.

Utilities and features

HPE Smart Storage Administrator

The HPE SSA is a configuration and management tool for HPE Smart Array controllers. Starting with HPE ProLiant Gen8 servers, HPE SSA replaces ACU with an enhanced GUI and additional configuration features.

The HPE SSA exists in three interface formats: the HPE SSA GUI, the HPE SSA CLI, and HPE SSA Scripting. Although all formats provide support for configuration tasks, some of the advanced tasks are available in only one format.

Some HPE SSA features include the following:

- Supports online array capacity expansion, logical drive extension, assignment of online spares, and RAID or stripe size migration

- Provides diagnostic and SmartSSD Wear Gauge functionality on the Diagnostics tab
- For supported controllers, provides access to additional features.

For more information about HPE SSA, see the Hewlett Packard Enterprise website (http://www.hpe.com/servers/ssa).

Option ROM Configuration for Arrays

Before installing an operating system, you can use the ORCA utility to create the first logical drive, assign RAID levels, and establish online spare configurations.

The utility also provides support for the following functions:

- Reconfiguring one or more logical drives
- Viewing the current logical drive configuration
- Deleting a logical drive configuration
- Setting the controller to be the boot controller
- Selecting the boot volume

If you do not use the utility, ORCA will default to the standard configuration.

For more information regarding the default configurations that ORCA uses, see the *HPE ROM-Based Setup Utility User Guide* on the Documentation CD or the HPE RBSU Information Library (http://www.hpe.com/info/rbsu/docs).

For more information about the storage controller and its features, select the relevant controller user documentation on the Hewlett Packard Enterprise website (http://www.hpe.com/support/SAC_UG_ProLiantServers_en).

To configure arrays, see the user guide for Smart Array Controllers on the Hewlett Packard Enterprise website (http://www.hpe.com/support/CASAC_RG_en).

ROMPaq utility

The ROMPaq utility enables you to upgrade the system firmware (BIOS). To upgrade the firmware, insert a ROMPaq USB Key into an available USB port and boot the system. In addition to ROMPaq, Online Flash Components for Windows and Linux operating systems are available for updating the system firmware.

The ROMPaq utility checks the system and provides a choice (if more than one exists) of available firmware revisions.

To locate the drivers for a particular server, go to the Hewlett Packard Enterprise website (http://www.hpe.com/support/hpesc). Under **Select your HPE product**, enter the product name or number and click **Go**.

Automatic Server Recovery

ASR is a feature that causes the system to restart when a catastrophic operating system error occurs, such as a blue screen, ABEND (does not apply to HPE ProLiant DL980 Servers), or panic. A system fail-safe timer, the ASR timer, starts when the System Management driver, also known as the Health Driver, is loaded. When the operating system is functioning properly, the system periodically resets the timer. However, when the operating system fails, the timer expires and restarts the server.

ASR increases server availability by restarting the server within a specified time after a system hang. At the same time, the SIM console notifies you by sending a message to a designated pager number that ASR has restarted the system. You can disable ASR from the System Management Homepage or through RBSU.

USB support

Hewlett Packard Enterprise provides both standard USB 2.0 support and legacy USB 2.0 support. Standard support is provided by the OS through the appropriate USB device drivers. Before the OS loads, Hewlett Packard Enterprise provides support for USB devices through legacy USB support, which is enabled by default in the system ROM.

Legacy USB support provides USB functionality in environments where USB support is not available normally. Specifically, Hewlett Packard Enterprise provides legacy USB functionality for the following:

- POST
- RBSU
- Diagnostics
- DOS
- Operating environments which do not provide native USB support

Redundant ROM support

The server enables you to upgrade or configure the ROM safely with redundant ROM support. The server has a single ROM that acts as two separate ROM images. In the standard implementation, one side of the ROM contains the current ROM program version, while the other side of the ROM contains a backup version.

NOTE: The server ships with the same version programmed on each side of the ROM.

Safety and security benefits

When you flash the system ROM, ROMPaq writes over the backup ROM and saves the current ROM as a backup, enabling you to switch easily to the alternate ROM version if the new ROM becomes corrupted for any reason. This feature protects the existing ROM version, even if you experience a power failure while flashing the ROM.

Keeping the system current

Drivers

IMPORTANT: Always perform a backup before installing or updating device drivers.

The server includes new hardware that may not have driver support on all OS installation media.

If you are installing an Intelligent Provisioning-supported OS, use Intelligent Provisioning (on page 107) and its Configure and Install feature to install the OS and latest supported drivers.

If you do not use Intelligent Provisioning to install an OS, drivers for some of the new hardware are required. These drivers, as well as other option drivers, ROM images, and value-add software can be downloaded as part of an SPP.

If you are installing drivers from SPP, be sure that you are using the latest SPP version that your server supports. To verify that your server is using the latest supported version and for more information about SPP, see the Hewlett Packard Enterprise website (http://www.hpe.com/servers/spp/download).

To locate the drivers for a particular server, go to the Hewlett Packard Enterprise Support Center website (http://www.hpe.com/support/hpesc). Under **Select your HPE product**, enter the product name or number and click **Go**.

Software and firmware

Software and firmware should be updated before using the server for the first time, unless any installed software or components require an older version.

For system software and firmware updates, use one of the following sources:

- Download the SPP ("Service Pack for ProLiant" on page 109) from the Service Pack for ProLiant download page (http://www.hpe.com/info/spp/docs).
- Download individual drivers, firmware, or other systems software components from the server product page in the Hewlett Packard Enterprise Support Center website (http://www.hpe.com/support/hpesc).

Version control

The VCRM and VCA are web-enabled Insight Management Agents tools that SIM uses to schedule software update tasks to the entire enterprise.

- VCRM manages the repository for SPP. Administrators can view the SPP contents or configure VCRM to automatically update the repository with internet downloads of the latest software and firmware from Hewlett Packard Enterprise.
- VCA compares installed software versions on the node with updates available in the VCRM managed repository. Administrators configure VCA to point to a repository managed by VCRM.

For more information about version control tools, see the *Systems Insight Manager User Guide,* the *Version Control Agent User Guide*, and the *Version Control Repository Manager User Guide* on the Hewlett Packard Enterprise website (http://www.hpe.com/info/enterprise/docs).

1. Select **HP Insight Management** from the available options in Products and Solutions.
2. Select **HP Version Control** from the available options in Insight Management.
3. Download the latest document.

Operating systems and virtualization software support for ProLiant servers

For information about specific versions of a supported operating system, see the Hewlett Packard Enterprise website (http://www.hpe.com/info/ossupport).

Change control and proactive notification

Hewlett Packard Enterprise offers Change Control and Proactive Notification to notify customers 30 to 60 days in advance of upcoming hardware and software changes on Hewlett Packard Enterprise commercial products.

For more information, refer to the Hewlett Packard Enterprise website (http://www.hpe.com/info/pcn).

Troubleshooting

Troubleshooting resources

The *ProLiant Gen8 Troubleshooting Guide, Volume I: Troubleshooting* provides procedures for resolving common problems and comprehensive courses of action for fault isolation and identification, issue resolution, and software maintenance on ProLiant servers and server blades. To view the guide, select a language:

- English (http://www.hpe.com/support/Gen9_TSG_en)
- French (http://www.hpe.com/support/Gen9_TSG_fr)
- Spanish (http://www.hpe.com/support/Gen9_TSG_es)
- German (http://www.hpe.com/support/Gen9_TSG_de)
- Japanese (http://www.hpe.com/support/Gen9_TSG_ja)
- Simplified Chinese (http://www.hpe.com/support/Gen9_TSG_zh_cn)

The *ProLiant Gen8 Troubleshooting Guide, Volume II: Error Messages* provides a list of error messages and information to assist with interpreting and resolving error messages on ProLiant servers and server blades. To view the guide, select a language:

- English (http://www.hpe.com/support/Gen9_EMG_en)
- French (http://www.hpe.com/support/Gen9_EMG_fr)
- Spanish (http://www.hpe.com/support/Gen9_EMG_es)
- German (http://www.hpe.com/support/Gen9_EMG_de)
- Japanese (http://www.hpe.com/support/Gen9_EMG_ja)
- Simplified Chinese (http://www.hpe.com/support/Gen9_EMG_zh_cn)

Battery replacement

If the server no longer automatically displays the correct date and time, you might have to replace the battery that provides power to the real-time clock. Under normal use, battery life is 5 to 10 years.

⚠ **WARNING:** The computer contains an internal lithium manganese dioxide, a vanadium pentoxide, or an alkaline battery pack. A risk of fire and burns exists if the battery pack is not properly handled. To reduce the risk of personal injury:

- Do not attempt to recharge the battery.
- Do not expose the battery to temperatures higher than 60°C (140°F).
- Do not disassemble, crush, puncture, short external contacts, or dispose of in fire or water.
- Replace only with the spare designated for this product.

To remove the component:

1. Do one of the following:
   - For tower models, open and remove the bezel ("Remove the tower bezel" on page 19).
   - For rack models, if installed, remove the security bezel (on page 19).
2. Power down the server (on page 18).
3. Remove all power:
   a. Disconnect each power cord from the power source.
   b. Disconnect each power cord from the server.
4. Do one of the following:
   - For tower models, place the server on a flat, level surface with the access panel facing up.
   - For rack models, extend the server from the rack (on page 22).
5. Remove the access panel (on page 21).
6. Remove the air baffle (on page 23).
7. Remove the battery.

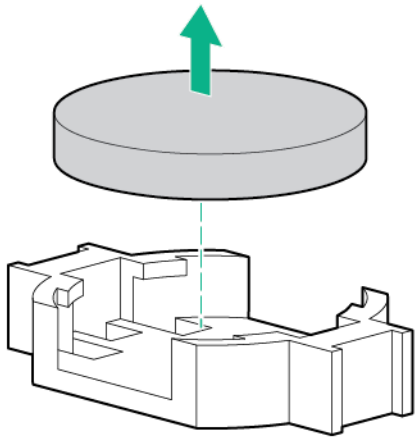

IMPORTANT: Replacing the system board battery resets the system ROM to its default configuration. After replacing the battery, reconfigure the system through RBSU.

For more information about battery replacement or proper disposal, contact an authorized reseller or an authorized service provider.

Warranty and regulatory information

Warranty information

HPE ProLiant and x86 Servers and Options (http://www.hpe.com/support/ProLiantServers-Warranties)

HPE Enterprise Servers (http://www.hpe.com/support/EnterpriseServers-Warranties)

HPE Storage Products (http://www.hpe.com/support/Storage-Warranties)

HPE Networking Products (http://www.hpe.com/support/Networking-Warranties)

Regulatory information

Safety and regulatory compliance

For important safety, environmental, and regulatory information, see *Safety and Compliance Information for Server, Storage, Power, Networking, and Rack Products*, available at the Hewlett Packard Enterprise website (http://www.hpe.com/support/Safety-Compliance-EnterpriseProducts).

Belarus Kazakhstan Russia marking



Manufacturer and Local Representative Information

Manufacturer information:

Hewlett Packard Enterprise Company, 3000 Hanover Street, Palo Alto, CA 94304 U.S.

Local representative information Russian:

- **Russia:**

  ООО «Хьюлетт Паккард Энтерпрайз», Российская Федерация, 125171, г. Москва, Ленинградское шоссе, 16А, стр.3, Телефон/факс: +7 495 797 35 00

- **Belarus:**

  ИООО «Хьюлетт-Паккард Бел», Республика Беларусь, 220030, г. Минск, ул. Интернациональная, 36-1, Телефон/факс: +375 17 392 28 20

- **Kazakhstan:**

  ТОО «Хьюлетт-Паккард (К)», Республика Казахстан, 050040, г. Алматы, Бостандыкский район, проспект Аль-Фараби, 77/7, Телефон/факс: + 7 727 355 35 52

Local representative information Kazakh:

- **Russia:**

  ЖШС "Хьюлетт Паккард Энтерпрайз", Ресей Федерациясы, 125171,
  Мәскеу, Ленинград тас жолы, 16А блок 3, Телефон/факс: +7 495 797 35 00

- **Belarus:**

  «HEWLETT-PACKARD Bel» ЖШС, Беларусь Республикасы, 220030, Минск қ.,
  Интернациональная көшесі, 36/1, Телефон/факс: +375 17 392 28 20

- **Kazakhstan:**

  ЖШС «Хьюлетт-Паккард (К)», Қазақстан Республикасы, 050040, Алматы к.,
  Бостандық ауданы, Әл-Фараби даңғ ылы, 77/7, Телефон/факс: +7 727 355 35 52

Manufacturing date:

The manufacturing date is defined by the serial number.

CCSYWWZZZZ (serial number format for this product)

Valid date formats include:

- YWW, where Y indicates the year counting from within each new decade, with 2000 as the starting point; for example, 238: 2 for 2002 and 38 for the week of September 9. In addition, 2010 is indicated by 0, 2011 by 1, 2012 by 2, 2013 by 3, and so forth.
- YYWW, where YY indicates the year, using a base year of 2000; for example, 0238: 02 for 2002 and 38 for the week of September 9.

Turkey RoHS material content declaration

Türkiye Cumhuriyeti: EEE Yönetmeliğine Uygundur

Ukraine RoHS material content declaration

Обладнання відповідає вимогам Технічного регламенту щодо обмеження використання деяких небезпечних речовин в електричному та електронному обладнанні, затвердженого постановою Кабінету Міністрів України від 3 грудня 2008 № 1057

Electrostatic discharge

Preventing electrostatic discharge

To prevent damaging the system, be aware of the precautions you need to follow when setting up the system or handling parts. A discharge of static electricity from a finger or other conductor may damage system boards or other static-sensitive devices. This type of damage may reduce the life expectancy of the device.

To prevent electrostatic damage:

- Avoid hand contact by transporting and storing products in static-safe containers.
- Keep electrostatic-sensitive parts in their containers until they arrive at static-free workstations.
- Place parts on a grounded surface before removing them from their containers.
- Avoid touching pins, leads, or circuitry.
- Always be properly grounded when touching a static-sensitive component or assembly.

Grounding methods to prevent electrostatic discharge

Several methods are used for grounding. Use one or more of the following methods when handling or installing electrostatic-sensitive parts:

- Use a wrist strap connected by a ground cord to a grounded workstation or computer chassis. Wrist straps are flexible straps with a minimum of 1 megohm ±10 percent resistance in the ground cords. To provide proper ground, wear the strap snug against the skin.
- Use heel straps, toe straps, or boot straps at standing workstations. Wear the straps on both feet when standing on conductive floors or dissipating floor mats.
- Use conductive field service tools.
- Use a portable field service kit with a folding static-dissipating work mat.

If you do not have any of the suggested equipment for proper grounding, have an authorized reseller install the part.

For more information on static electricity or assistance with product installation, contact an authorized reseller.

Specifications

Environmental specifications

Specification	Value
Temperature range*	
Operating	10°C to 35°C (50°F to 95°F)
Non-operating	-30°C to 60°C (-22°F to 140°F)
Relative humidity (non-condensing)	
Operating, maximum wet bulb temperature of 28°C (82.4°F)	10% to 90%
Non-operating, maximum wet bulb temperature of 38.7°C (101.7°F)	5% to 95%

* All temperature ratings shown are for sea level. An altitude derating of 1°C per 304.8 m (1.8°F per 1,000 ft) to 3048 m (10,000 ft) is applicable. No direct sunlight allowed.

Server specifications

Specification	Value
Dimensions	
Rack model	—
Height	21.8 cm (8.58 in)
Depth	73.22 cm (28.83 in)
Width	48.26 cm (19.00 in)
Tower model	—
Height	46.2 cm (18.19 in)
Depth	74.00 cm (29.13 in)
Width	21.8 cm (8.58 in)
Weight	
Rack model	—
Maximum	50.06 kg (110.36 lbs)
Minimum	27.63 kg (60.91 lbs)
Tower model	—
Maximum	52.09 kg (144.84 lbs)
Minimum	31.09 kg (70.33 lbs)

Power supply specifications

Depending on installed options, the server is configured with one of the following power supplies:

- HPE 460 W Gold Power Supply (92% efficiency)
- HPE 460 W Platinum Plus Power Supply (94% efficiency)

- HPE 750 W Gold Power Supply (92% efficiency)
- HPE 750 W Platinum Plus Power Supply (94% efficiency)
- HPE 1200 W Platinum Plus Power Supply (94% efficiency)

HPE 460 W Gold Power Supply (92% efficiency)

Specification	Value
Input requirements	—
Rated input voltage	100 to 120 VAC, 200 to 240 VAC
Rated input frequency	50 Hz to 60 Hz
Rated input current	5.5 A at 100 VAC 2.6 A at 200 VAC
Rated input power	526 W at 100V AC input 505 W at 200V AC input
Btus per hour	1794 at 100V AC input 1725 at 200V AC input
Power supply output	—
Rated steady-state power	460 W at 100V to 120V AC input 460 W at 200V to 240V AC input
Maximum peak power	460 W at 100V to 120V AC input 460 W at 200V to 240V AC input

HPE 460 W Platinum Plus Power Supply (94% efficiency)

Specification	Value
Input requirements	—
Rated input voltage	100 to 240 VAC
Rated input frequency	47 Hz to 63 Hz
Rated input current	8 A
Rated input power	509 W at 115V AC input 495 W at 230V AC input
Btus per hour	1764 at 100V AC input 1736 at 115V AC input 1694 at 200V AC input 1687 at 230V AC input
Power supply output	—
Rated steady-state power	460 W at 100V to 120V AC input 460 W at 200V to 240V AC input
Maximum peak power	460 W at 100V to 120V AC input 460 W at 200V to 240V AC input

HPE 750 W Gold Power Supply (92% efficiency)

Specification	Value
Input requirements	—
Rated input voltage	100 to 120 VAC, 200 to 240 VAC
Rated input frequency	50 Hz to 60 Hz
Rated input current	8.9 A at 100 VAC 4.3 A at 200 VAC

Rated input power	857 W at 100V AC input 824 W at 200V AC input
Btus per hour	2925 at 100V AC input 2812 at 200V AC input
Power supply output	—
Rated steady-state power	750 W at 100V to 120V AC input 750 W at 200V to 240V AC input
Maximum peak power	750 W at 100V to 120V AC input 750 W at 200V to 240V AC input

HPE 750 W Platinum Plus Power Supply (94% efficiency)

Specification	Value
Input requirements	—
Rated input voltage	100 to 120 VAC, 200 to 240 VAC
Rated input frequency	50 Hz to 60 Hz
Rated input current	8.5 A at 100 VAC 4.1 A at 200 VAC
Rated input power	831 W at 115V AC input 808 W at 230V AC input
Btus per hour	2878 at 100V AC input 2834 at 115V AC input 2769 at 200V AC input 2758 at 230V AC input
Power supply output	—
Rated steady-state power	750 W at 100V to 120V AC input 750 W at 200V to 240V AC input
Maximum peak power	750 W at 100V to 120V AC input 750 W at 200V to 240V AC input

HPE 1200 W Platinum Plus Power Supply (94% efficiency)

Specification	Value
Input requirements	—
Rated input voltage	100 to 120 VAC, 200 to 240 VAC
Rated input frequency	50 Hz to 60 Hz
Rated input current	10 A at 100 VAC 6.7 A at 200 VAC
Rated input power	990 W at 115V AC input 1315 W at 230V AC input
Btus per hour	3060 at 100V AC input 3380 at 115V AC input 4503 at 200V AC input 4485 at 230V AC input
Power supply output	—
Rated steady-state power	800 W at 100V AC input 900 W at 120V AC input 1200 W at 200V to 240V AC input
Maximum peak power	800 W at 100V AC input 900 W at 120V AC input 1200 W at 200V to 240V AC input

Support and other resources

Accessing Hewlett Packard Enterprise Support

- For live assistance, go to the Contact Hewlett Packard Enterprise Worldwide website (http://www.hpe.com/assistance).
- To access documentation and support services, go to the Hewlett Packard Enterprise Support Center website (http://www.hpe.com/support/hpesc).

Information to collect

- Technical support registration number (if applicable)
- Product name, model or version, and serial number
- Operating system name and version
- Firmware version
- Error messages
- Product-specific reports and logs
- Add-on products or components
- Third-party products or components

Accessing updates

- Some software products provide a mechanism for accessing software updates through the product interface. Review your product documentation to identify the recommended software update method.
- To download product updates, go to either of the following:
  - Hewlett Packard Enterprise Support Center **Get connected with updates** page (http://www.hpe.com/support/e-updates)
  - Software Depot website (http://www.hpe.com/support/softwaredepot)
- To view and update your entitlements, and to link your contracts and warranties with your profile, go to the Hewlett Packard Enterprise Support Center **More Information on Access to Support Materials** page (http://www.hpe.com/support/AccessToSupportMaterials).



IMPORTANT: Access to some updates might require product entitlement when accessed through the Hewlett Packard Enterprise Support Center. You must have an HP Passport set up with relevant entitlements.

Websites

- Hewlett Packard Enterprise Information Library (http://www.hpe.com/info/enterprise/docs)
- Hewlett Packard Enterprise Support Center (http://www.hpe.com/support/hpesc)
- Contact Hewlett Packard Enterprise Worldwide (http://www.hpe.com/assistance)

- Subscription Service/Support Alerts (http://www.hpe.com/support/e-updates)
- Software Depot (http://www.hpe.com/support/softwaredepot)
- Customer Self Repair (http://www.hpe.com/support/selfrepair)
- Insight Remote Support (http://www.hpe.com/info/insightremotesupport/docs)
- Serviceguard Solutions for HP-UX (http://www.hpe.com/info/hpux-serviceguard-docs)
- Single Point of Connectivity Knowledge (SPOCK) Storage compatibility matrix (http://www.hpe.com/storage/spock)
- Storage white papers and analyst reports (http://www.hpe.com/storage/whitepapers)

Customer Self Repair

Hewlett Packard Enterprise products are designed with many Customer Self Repair (CSR) parts to minimize repair time and allow for greater flexibility in performing defective parts replacement. If during the diagnosis period Hewlett Packard Enterprise (or Hewlett Packard Enterprise service providers or service partners) identifies that the repair can be accomplished by the use of a CSR part, Hewlett Packard Enterprise will ship that part directly to you for replacement. There are two categories of CSR parts:

- **Mandatory**—Parts for which customer self repair is mandatory. If you request Hewlett Packard Enterprise to replace these parts, you will be charged for the travel and labor costs of this service.
- **Optional**—Parts for which customer self repair is optional. These parts are also designed for customer self repair. If, however, you require that Hewlett Packard Enterprise replace them for you, there may or may not be additional charges, depending on the type of warranty service designated for your product.

NOTE: Some Hewlett Packard Enterprise parts are not designed for customer self repair. In order to satisfy the customer warranty, Hewlett Packard Enterprise requires that an authorized service provider replace the part. These parts are identified as "No" in the Illustrated Parts Catalog.

Based on availability and where geography permits, CSR parts will be shipped for next business day delivery. Same day or four-hour delivery may be offered at an additional charge where geography permits. If assistance is required, you can call the Hewlett Packard Enterprise Support Center and a technician will help you over the telephone. Hewlett Packard Enterprise specifies in the materials shipped with a replacement CSR part whether a defective part must be returned to Hewlett Packard Enterprise. In cases where it is required to return the defective part to Hewlett Packard Enterprise, you must ship the defective part back to Hewlett Packard Enterprise within a defined period of time, normally five (5) business days. The defective part must be returned with the associated documentation in the provided shipping material. Failure to return the defective part may result in Hewlett Packard Enterprise billing you for the replacement. With a customer self repair, Hewlett Packard Enterprise will pay all shipping and part return costs and determine the courier/carrier to be used.

For more information about the Hewlett Packard Enterprise CSR program, contact your local service provider. For the North American program, go to the Hewlett Packard Enterprise CSR website (http://www.hpe.com/support/selfrepair).

Réparation par le client (CSR)

Les produits Hewlett Packard Enterprise comportent de nombreuses pièces CSR (Customer Self Repair = réparation par le client) afin de minimiser les délais de réparation et faciliter le remplacement des pièces défectueuses. Si pendant la période de diagnostic, Hewlett Packard Enterprise (ou ses partenaires ou mainteneurs agréés) détermine que la réparation peut être effectuée à l'aide d'une pièce CSR, Hewlett Packard Enterprise vous l'envoie directement. Il existe deux catégories de pièces CSR :

- **Obligatoire—**Pièces pour lesquelles la réparation par le client est obligatoire. Si vous demandez à Hewlett Packard Enterprise de remplacer ces pièces, les coûts de déplacement et main d'œuvre du service vous seront facturés.
- **Facultatif**—Pièces pour lesquelles la réparation par le client est facultative. Ces pièces sont également conçues pour permettre au client d'effectuer lui-même la réparation. Toutefois, si vous demandez à Hewlett Packard Enterprise de remplacer ces pièces, l'intervention peut ou non vous être facturée, selon le type de garantie applicable à votre produit.

REMARQUE: Certaines pièces Hewlett Packard Enterprise ne sont pas conçues pour permettre au client d'effectuer lui-même la réparation. Pour que la garantie puisse s'appliquer, Hewlett Packard Enterprise exige que le remplacement de la pièce soit effectué par un Mainteneur Agréé. Ces pièces sont identifiées par la mention "Non" dans le Catalogue illustré.

Les pièces CSR sont livrées le jour ouvré suivant, dans la limite des stocks disponibles et selon votre situation géographique. Si votre situation géographique le permet et que vous demandez une livraison le jour même ou dans les 4 heures, celle-ci vous sera facturée. Pour toute assistance, appelez le Centre d'assistance Hewlett Packard Enterprise pour qu'un technicien vous aide au téléphone. Dans les documents envoyés avec la pièce de rechange CSR, Hewlett Packard Enterprise précise s'il est nécessaire de lui retourner la pièce défectueuse. Si c'est le cas, vous devez le faire dans le délai indiqué, généralement cinq (5) jours ouvrés. La pièce et sa documentation doivent être retournées dans l'emballage fourni. Si vous ne retournez pas la pièce défectueuse, Hewlett Packard Enterprise se réserve le droit de vous facturer les coûts de remplacement. Dans le cas d'une pièce CSR, Hewlett Packard Enterprise supporte l'ensemble des frais d'expédition et de retour, et détermine la société de courses ou le transporteur à utiliser.

Pour plus d'informations sur le programme CSR de Hewlett Packard Enterprise, contactez votre Mainteneur Agrée local. Pour plus d'informations sur ce programme en Amérique du Nord, consultez le site Web Hewlett Packard Enterprise (http://www.hpe.com/support/selfrepair).

Riparazione da parte del cliente

Per abbreviare i tempi di riparazione e garantire una maggiore flessibilità nella sostituzione di parti difettose, i prodotti Hewlett Packard Enterprise sono realizzati con numerosi componenti che possono essere riparati direttamente dal cliente (CSR, Customer Self Repair). Se in fase di diagnostica Hewlett Packard Enterprise (o un centro di servizi o di assistenza Hewlett Packard Enterprise) identifica il guasto come riparabile mediante un ricambio CSR, Hewlett Packard Enterprise lo spedirà direttamente al cliente per la sostituzione. Vi sono due categorie di parti CSR:

- **Obbligatorie—**Parti che devono essere necessariamente riparate dal cliente. Se il cliente ne affida la riparazione ad Hewlett Packard Enterprise, deve sostenere le spese di spedizione e di manodopera per il servizio.
- **Opzionali—**Parti la cui riparazione da parte del cliente è facoltativa. Si tratta comunque di componenti progettati per questo scopo. Se tuttavia il cliente ne richiede la sostituzione ad Hewlett Packard Enterprise, potrebbe dover sostenere spese addizionali a seconda del tipo di garanzia previsto per il prodotto.

NOTA: alcuni componenti Hewlett Packard Enterprise non sono progettati per la riparazione da parte del cliente. Per rispettare la garanzia, Hewlett Packard Enterprise richiede che queste parti siano sostituite da un centro di assistenza autorizzato. Tali parti sono identificate da un "No" nel Catalogo illustrato dei componenti.

In base alla disponibilità e alla località geografica, le parti CSR vengono spedite con consegna entro il giorno lavorativo seguente. La consegna nel giorno stesso o entro quattro ore è offerta con un supplemento di costo solo in alcune zone. In caso di necessità si può richiedere l'assistenza telefonica di un addetto del centro di supporto tecnico Hewlett Packard Enterprise. Nel materiale fornito con una parte di ricambio CSR, Hewlett Packard Enterprise specifica se il cliente deve restituire dei component. Qualora sia richiesta la resa ad Hewlett Packard Enterprise del componente difettoso, lo si deve spedire ad Hewlett Packard Enterprise entro un determinato periodo di tempo, generalmente cinque (5) giorni lavorativi. Il componente difettoso deve essere restituito con la documentazione associata nell'imballo di

spedizione fornito. La mancata restituzione del componente può comportare la fatturazione del ricambio da parte di Hewlett Packard Enterprise. Nel caso di riparazione da parte del cliente, Hewlett Packard Enterprise sostiene tutte le spese di spedizione e resa e sceglie il corriere/vettore da utilizzare.

Per ulteriori informazioni sul programma CSR di Hewlett Packard Enterprise, contattare il centro di assistenza di zona. Per il programma in Nord America fare riferimento al sito Web (http://www.hpe.com/support/selfrepair).

Customer Self Repair

Hewlett Packard Enterprise Produkte enthalten viele CSR-Teile (Customer Self Repair), um Reparaturzeiten zu minimieren und höhere Flexibilität beim Austausch defekter Bauteile zu ermöglichen. Wenn Hewlett Packard Enterprise (oder ein Hewlett Packard Enterprise Servicepartner) bei der Diagnose feststellt, dass das Produkt mithilfe eines CSR-Teils repariert werden kann, sendet Ihnen Hewlett Packard Enterprise dieses Bauteil zum Austausch direkt zu. CSR-Teile werden in zwei Kategorien unterteilt:

- **Zwingend—**Teile, für die das Customer Self Repair-Verfahren zwingend vorgegeben ist. Wenn Sie den Austausch dieser Teile von Hewlett Packard Enterprise vornehmen lassen, werden Ihnen die Anfahrt- und Arbeitskosten für diesen Service berechnet.
- **Optional—**Teile, für die das Customer Self Repair-Verfahren optional ist. Diese Teile sind auch für Customer Self Repair ausgelegt. Wenn Sie jedoch den Austausch dieser Teile von Hewlett Packard Enterprise vornehmen lassen möchten, können bei diesem Service je nach den für Ihr Produkt vorgesehenen Garantiebedingungen zusätzliche Kosten anfallen.

HINWEIS: Einige Hewlett Packard Enterprise Teile sind nicht für Customer Self Repair ausgelegt. Um den Garantieanspruch des Kunden zu erfüllen, muss das Teil von einem Hewlett Packard Enterprise Servicepartner ersetzt werden. Im illustrierten Teilekatalog sind diese Teile mit „No“ bzw. „Nein“ gekennzeichnet.

CSR-Teile werden abhängig von der Verfügbarkeit und vom Lieferziel am folgenden Geschäftstag geliefert. Für bestimmte Standorte ist eine Lieferung am selben Tag oder innerhalb von vier Stunden gegen einen Aufpreis verfügbar. Wenn Sie Hilfe benötigen, können Sie das Hewlett Packard Enterprise Support Center anrufen und sich von einem Mitarbeiter per Telefon helfen lassen. Den Materialien von Hewlett Packard Enterprise, die mit einem CSR-Ersatzteil geliefert werden, können Sie entnehmen, ob das defekte Teil an Hewlett Packard Enterprise zurückgeschickt werden muss. Wenn es erforderlich ist, das defekte Teil an Hewlett Packard Enterprise zurückzuschicken, müssen Sie dies innerhalb eines vorgegebenen Zeitraums tun, in der Regel innerhalb von fünf (5) Geschäftstagen. Das defekte Teil muss mit der zugehörigen Dokumentation in der Verpackung zurückgeschickt werden, die im Lieferumfang enthalten ist. Wenn Sie das defekte Teil nicht zurückschicken, kann Hewlett Packard Enterprise Ihnen das Ersatzteil in Rechnung stellen. Im Falle von Customer Self Repair kommt Hewlett Packard Enterprise für alle Kosten für die Lieferung und Rücksendung auf und bestimmt den Kurier-/Frachtdienst.

Weitere Informationen über das Hewlett Packard Enterprise Customer Self Repair Programm erhalten Sie von Ihrem Servicepartner vor Ort. Informationen über das CSR-Programm in Nordamerika finden Sie auf der Hewlett Packard Enterprise Website unter (http://www.hpe.com/support/selfrepair).

Reparaciones del propio cliente

Los productos de Hewlett Packard Enterprise incluyen muchos componentes que el propio usuario puede reemplazar (Customer Self Repair, CSR) para minimizar el tiempo de reparación y ofrecer una mayor flexibilidad a la hora de realizar sustituciones de componentes defectuosos. Si, durante la fase de diagnóstico, Hewlett Packard Enterprise (o los proveedores o socios de servicio de Hewlett Packard Enterprise) identifica que una reparación puede llevarse a cabo mediante el uso de un componente CSR, Hewlett Packard Enterprise le enviará dicho componente directamente para que realice su sustitución. Los componentes CSR se clasifican en dos categorías:

- **Obligatorio—**componentes cuya reparación por parte del usuario es obligatoria. Si solicita a Hewlett Packard Enterprise que realice la sustitución de estos componentes, tendrá que hacerse cargo de los gastos de desplazamiento y de mano de obra de dicho servicio.
- **Opcional—**componentes cuya reparación por parte del usuario es opcional. Estos componentes también están diseñados para que puedan ser reparados por el usuario. Sin embargo, si precisa que Hewlett Packard Enterprise realice su sustitución, puede o no conllevar costes adicionales, dependiendo del tipo de servicio de garantía correspondiente al producto.

NOTA: Algunos componentes de Hewlett Packard Enterprise no están diseñados para que puedan ser reparados por el usuario. Para que el usuario haga valer su garantía, Hewlett Packard Enterprise pone como condición que un proveedor de servicios autorizado realice la sustitución de estos componentes. Dichos componentes se identifican con la palabra "No" en el catálogo ilustrado de componentes.

Según la disponibilidad y la situación geográfica, los componentes CSR se enviarán para que lleguen a su destino al siguiente día laborable. Si la situación geográfica lo permite, se puede solicitar la entrega en el mismo día o en cuatro horas con un coste adicional. Si precisa asistencia técnica, puede llamar al Centro de asistencia técnica de Hewlett Packard Enterprise y recibirá ayuda telefónica por parte de un técnico. Con el envío de materiales para la sustitución de componentes CSR, Hewlett Packard Enterprise especificará si los componentes defectuosos deberán devolverse a Hewlett Packard Enterprise. En aquellos casos en los que sea necesario devolver algún componente a Hewlett Packard Enterprise, deberá hacerlo en el periodo de tiempo especificado, normalmente cinco días laborables. Los componentes defectuosos deberán devolverse con toda la documentación relacionada y con el embalaje de envío. Si no enviara el componente defectuoso requerido, Hewlett Packard Enterprise podrá cobrarle por el de sustitución. En el caso de todas sustituciones que lleve a cabo el cliente, Hewlett Packard Enterprise se hará cargo de todos los gastos de envío y devolución de componentes y escogerá la empresa de transporte que se utilice para dicho servicio.

Para obtener más información acerca del programa de Reparaciones del propio cliente de Hewlett Packard Enterprise, póngase en contacto con su proveedor de servicios local. Si está interesado en el programa para Norteamérica, visite la página web de Hewlett Packard Enterprise CSR (http://www.hpe.com/support/selfrepair).

Customer Self Repair

Veel onderdelen in Hewlett Packard Enterprise producten zijn door de klant zelf te repareren, waardoor de reparatieduur tot een minimum beperkt kan blijven en de flexibiliteit in het vervangen van defecte onderdelen groter is. Deze onderdelen worden CSR-onderdelen (Customer Self Repair) genoemd. Als Hewlett Packard Enterprise (of een Hewlett Packard Enterprise Service Partner) bij de diagnose vaststelt dat de reparatie kan worden uitgevoerd met een CSR-onderdeel, verzendt Hewlett Packard Enterprise dat onderdeel rechtstreeks naar u, zodat u het defecte onderdeel daarmee kunt vervangen. Er zijn twee categorieën CSR-onderdelen:

- **Verplicht—**Onderdelen waarvoor reparatie door de klant verplicht is. Als u Hewlett Packard Enterprise verzoekt deze onderdelen voor u te vervangen, worden u voor deze service reiskosten en arbeidsloon in rekening gebracht.
- **Optioneel—**Onderdelen waarvoor reparatie door de klant optioneel is. Ook deze onderdelen zijn ontworpen voor reparatie door de klant. Als u echter Hewlett Packard Enterprise verzoekt deze onderdelen voor u te vervangen, kunnen daarvoor extra kosten in rekening worden gebracht, afhankelijk van het type garantieservice voor het product.

OPMERKING: Sommige Hewlett Packard Enterprise onderdelen zijn niet ontwikkeld voor reparatie door de klant. In verband met de garantievoorwaarden moet het onderdeel door een geautoriseerde Service Partner worden vervangen. Deze onderdelen worden in de geïllustreerde onderdelencatalogus aangemerkt met "Nee".

Afhankelijk van de leverbaarheid en de locatie worden CSR-onderdelen verzonden voor levering op de eerstvolgende werkdag. Levering op dezelfde dag of binnen vier uur kan tegen meerkosten worden aangeboden, indien dit mogelijk is gezien de locatie. Indien assistentie is gewenst, belt u het Hewlett Packard Enterprise Support Center om via de telefoon ondersteuning van een technicus te ontvangen.

Hewlett Packard Enterprise vermeldt in de documentatie bij het vervangende CSR-onderdeel of het defecte onderdeel aan Hewlett Packard Enterprise moet worden geretourneerd. Als het defecte onderdeel aan Hewlett Packard Enterprise moet worden teruggezonden, moet u het defecte onderdeel binnen een bepaalde periode, gewoonlijk vijf (5) werkdagen, retourneren aan Hewlett Packard Enterprise. Het defecte onderdeel moet met de bijbehorende documentatie worden geretourneerd in het meegeleverde verpakkingsmateriaal. Als u het defecte onderdeel niet terugzendt, kan Hewlett Packard Enterprise u voor het vervangende onderdeel kosten in rekening brengen. Bij reparatie door de klant betaalt Hewlett Packard Enterprise alle verzendkosten voor het vervangende en geretourneerde onderdeel en kiest Hewlett Packard Enterprise zelf welke koerier/transportonderneming hiervoor wordt gebruikt.

Neem contact op met een Service Partner voor meer informatie over het Customer Self Repair programma van Hewlett Packard Enterprise. Informatie over Service Partners vindt u op de Hewlett Packard Enterprise website (http://www.hpe.com/support/selfrepair).

Reparo feito pelo cliente

Os produtos da Hewlett Packard Enterprise são projetados com muitas peças para reparo feito pelo cliente (CSR) de modo a minimizar o tempo de reparo e permitir maior flexibilidade na substituição de peças com defeito. Se, durante o período de diagnóstico, a Hewlett Packard Enterprise (ou fornecedores/parceiros da Hewlett Packard Enterprise) concluir que o reparo pode ser efetuado pelo uso de uma peça CSR, a Hewlett Packard Enterprise enviará a peça diretamente ao cliente. Há duas categorias de peças CSR:

- **Obrigatória**—Peças cujo reparo feito pelo cliente é obrigatório. Se desejar que a Hewlett Packard Enterprise substitua essas peças, serão cobradas as despesas de transporte e mão-de-obra do serviço.
- **Opcional**—Peças cujo reparo feito pelo cliente é opcional. Essas peças também são projetadas para o reparo feito pelo cliente. No entanto, se desejar que a Hewlett Packard Enterprise as substitua, pode haver ou não a cobrança de taxa adicional, dependendo do tipo de serviço de garantia destinado ao produto.

OBSERVAÇÃO: Algumas peças da Hewlett Packard Enterprise não são projetadas para o reparo feito pelo cliente. A fim de cumprir a garantia do cliente, a Hewlett Packard Enterprise exige que um técnico autorizado substitua a peça. Essas peças estão identificadas com a marca "No" (Não), no catálogo de peças ilustrado.

Conforme a disponibilidade e o local geográfico, as peças CSR serão enviadas no primeiro dia útil após o pedido. Onde as condições geográficas permitirem, a entrega no mesmo dia ou em quatro horas pode ser feita mediante uma taxa adicional. Se precisar de auxílio, entre em contato com o Centro de suporte técnico da Hewlett Packard Enterprise para que um técnico o ajude por telefone. A Hewlett Packard Enterprise especifica nos materiais fornecidos com a peça CSR de reposição se a peça com defeito deve ser devolvida à Hewlett Packard Enterprise. Nos casos em que isso for necessário, é preciso enviar a peça com defeito à Hewlett Packard Enterprise, você deverá enviar a peça com defeito de volta para a Hewlett Packard Enterprise dentro do período de tempo definido, normalmente em 5 (cinco) dias úteis. A peça com defeito deve ser enviada com a documentação correspondente no material de transporte fornecido. Caso não o faça, a Hewlett Packard Enterprise poderá cobrar a reposição. Para as peças de reparo feito pelo cliente, a Hewlett Packard Enterprise paga todas as despesas de transporte e de devolução da peça e determina a transportadora/serviço postal a ser utilizado.

Para obter mais informações sobre o programa de reparo feito pelo cliente da Hewlett Packard Enterprise, entre em contato com o fornecedor de serviços local. Para o programa norte-americano, visite o site da Hewlett Packard Enterprise (http://www.hpe.com/support/selfrepair).

カスタマーセルフリペア

修理時間を短縮し、故障部品の交換における高い柔軟性を確保するために、Hewlett Packard Enterprise製品には多数のカスタマーセルフリペア（CSR）部品があります。診断の際に、CSR部品を使用すれば修理ができるとHewlett Packard Enterprise（Hewlett Packard EnterpriseまたはHewlett Packard Enterprise正規保守代理店）が判断した場合、Hewlett Packard Enterpriseはその部品を直接、お客様に発送し、お客様に交換していただきます。CSR部品には以下の2種類があります。

- **必須** - カスタマーセルフリペアが必須の部品。当該部品について、もしもお客様がHewlett Packard Enterpriseに交換作業を依頼される場合には、その修理サービスに関する交通費および人件費がお客様に請求されます。
- **任意** - カスタマーセルフリペアが任意である部品。この部品もカスタマーセルフリペア用です。当該部品について、もしもお客様がHewlett Packard Enterpriseに交換作業を依頼される場合には、お買い上げの製品に適用される保証サービス内容の範囲内においては、別途費用を負担していただくことなく保証サービスを受けることができます。

注：Hewlett Packard Enterprise製品の一部の部品は、カスタマーセルフリペアの対象外です。製品の保証を継続するためには、Hewlett Packard EnterpriseまたはHewlett Packard Enterprise正規保守代理店による交換作業が必須となります。部品カタログには、当該部品がカスタマーセルフリペア除外品である旨が記載されています。

部品供給が可能な場合、地域によっては、CSR部品を翌営業日に届くように発送します。また、地域によっては、追加費用を負担いただくことにより同日または4時間以内に届くように発送することも可能な場合があります。サポートが必要なときは、Hewlett Packard Enterpriseの修理受付窓口に電話していただければ、技術者が電話でアドバイスします。交換用のCSR部品または同梱物には、故障部品をHewlett Packard Enterpriseに返送する必要があるかどうかが表示されています。故障部品をHewlett Packard Enterpriseに返送する必要がある場合は、指定期限内（通常は5営業日以内）に故障部品をHewlett Packard Enterpriseに返送してください。故障部品を返送する場合は、届いた時の梱包箱に関連書類とともに入れてください。故障部品を返送しない場合、Hewlett Packard Enterpriseから部品費用が請求されます。カスタマーセルフリペアの際には、Hewlett Packard Enterpriseは送料および部品返送費を全額負担し、使用する宅配便会社や運送会社を指定します。

客户自行维修

Hewlett Packard Enterprise 产品提供许多客户自行维修 (CSR) 部件，以尽可能缩短维修时间和在更换缺陷部件方面提供更大的灵活性。如果在诊断期间 Hewlett Packard Enterprise（或Hewlett Packard Enterprise 服务提供商或服务合作伙伴）确定可以通过使用 CSR 部件完成维修，Hewlett Packard Enterprise 将直接把该部件发送给您进行更换。有两类 CSR 部件：

- **强制性的** — 要求客户必须自行维修的部件。如果您请求 Hewlett Packard Enterprise 更换这些部件，则必须为该服务支付差旅费和人工费用。
- **可选的** — 客户可以选择是否自行维修的部件。这些部件也是为客户自行维修设计的。不过，如果您要求 Hewlett Packard Enterprise 为您更换这些部件，则根据为您的产品指定的保修服务类型，Hewlett Packard Enterprise 可能收取或不再收取任何附加费用。

注：某些 Hewlett Packard Enterprise 部件的设计并未考虑客户自行维修。为了满足客户保修的需要，Hewlett Packard Enterprise 要求授权服务提供商更换相关部件。这些部件在部件图解目录中标记为“否”。

CSR 部件将在下一个工作日发运（取决于备货情况和允许的地理范围）。在允许的地理范围内，可在当天或四小时内发运，但要收取额外费用。如果需要帮助，您可以致电 Hewlett Packard Enterprise 技术支持中心，将会有技术人员通过电话为您提供帮助。Hewlett Packard Enterprise 会在随更换的 CSR 部件发运的材料中指明是否必须将有缺陷的部件返还给 Hewlett Packard Enterprise。如果要求您将有缺陷的部件返还给 Hewlett Packard Enterprise，那么您必须在规定的期限内（通常是五 (5) 个工作日）将缺陷部件发给 Hewlett Packard Enterprise。有缺陷的部件必须随所提供的发运材料中的相关文件一起返还。如果未能送还有缺陷的部件，Hewlett Packard Enterprise 可能会要求您支付更换费用。客户自行维修时，Hewlett Packard Enterprise 将承担所有相关运输和部件返回费用，并指定快递商/承运商。

有关 Hewlett Packard Enterprise 客户自行维修计划的详细信息，请与您当地的服务提供商联系。有关北美地区的计划，请访问 Hewlett Packard Enterprise 网站 (http://www.hpe.com/support/selfrepair)。

客戶自行維修

Hewlett Packard Enterprise 產品設計了許多「客戶自行維修」(CSR) 的零件以減少維修時間，並且使得更換瑕疵零件時能有更大的彈性。如果在診斷期間，Hewlett Packard Enterprise (或 Hewlett Packard Enterprise 服務供應商或維修夥伴) 辨認出此項維修工作可以藉由使用 CSR 零件來完成，則 Hewlett Packard Enterprise 將直接寄送該零件給您作更換。CSR 零件分為兩種類別：

- **強制的** — 客戶自行維修所使用的零件是強制性的。如果您要求 Hewlett Packard Enterprise 更換這些零件，Hewlett Packard Enterprise 將會向您收取此服務所需的外出費用與勞動成本。
- **選購的** — 客戶自行維修所使用的零件是選購的。這些零件也設計用於客戶自行維修之用。不過，如果您要求 Hewlett Packard Enterprise 為您更換，則可能需要也可能不需要負擔額外的費用，端視針對此產品指定的保固服務類型而定。

備註：某些 Hewlett Packard Enterprise 零件沒有消費者可自行維修的設計。為符合客戶保固，Hewlett Packard Enterprise 需要授權的服務供應商更換零件。這些零件在圖示的零件目錄中，被標示為「否」。

基於材料取得及環境允許的情況下，CSR 零件將於下一個工作日以快遞寄送。在環境的允許下當天或四小時內送達，則可能需要額外的費用。若您需要協助，可致電 Hewlett Packard Enterprise 支援中心，會有一位技術人員透過電話來協助您。不論損壞的零件是否必須退回，Hewlett Packard Enterprise 皆會在與 CSR 替換零件一起運送的材料中註明。若要將損壞的零件退回 Hewlett Packard Enterprise，您必須在指定的一段時間內 (通常為五 (5) 個工作天)，將損壞的零件寄回 Hewlett Packard Enterprise。損壞的零件必須與寄送資料中隨附的相關技術文件一併退還。如果無法退還損壞的零件，Hewlett Packard Enterprise 可能要向您收取替換費用。針對客戶自行維修情形，Hewlett Packard Enterprise 將負責所有運費及零件退還費用，並指定使用何家快遞/貨運公司。

如需 Hewlett Packard Enterprise 的 CSR 方案詳細資訊，請連絡您當地的服務供應商。至於北美方案，請參閱 Hewlett Packard Enterprise 的 CSR 網站frepair (http://www.hpe.com/support/selfrepair)。

고객 셀프 수리

Hewlett Packard Enterprise 제품은 수리 시간을 최소화하고 결함이 있는 부품 교체 시 더욱 융통성을 발휘할 수 있도록 하기 위해 고객 셀프 수리(CSR) 부품을 다량 사용하여 설계되었습니다. 진단 기간 동안 Hewlett Packard Enterprise(또는 Hewlett Packard Enterprise 서비스 공급업체 또는 서비스 협력업체)에서 CSR 부품을 사용하여 수리가 가능하다고 판단되면 Hewlett Packard Enterprise는 해당 부품을 바로 사용자에게 보내어 사용자가 교체할 수 있도록 합니다. CSR 부품에는 두 가지 종류가 있습니다.

- **필수** - 고객 셀프 수리가 의무 사항인 필수 부품. 사용자가 Hewlett Packard Enterprise에 이 부품의 교체를 요청할 경우 이 서비스에 대한 출장비 및 작업비가 청구됩니다.
- **선택 사항** - 고객 셀프 수리가 선택 사항인 부품. 이 부품들도 고객 셀프 수리가 가능하도록 설계되었습니다. 하지만 사용자가 Hewlett Packard Enterprise에 이 부품의 교체를 요청할 경우 사용자가 구입한 제품에 해당하는 보증 서비스 유형에 따라 추가 비용 없이 교체가 가능할 수 있습니다.

참고: 일부 Hewlett Packard Enterprise 부품은 고객 셀프 수리가 불가능하도록 설계되었습니다. Hewlett Packard Enterprise는 만족스러운 고객 보증을 위해 공인 서비스 제공업체를 통해 부품을 교체하도록 하고 있습니다. 이러한 부품들은 Illustrated Parts Catalog에 "No"라고 표시되어 있습니다.

CSR 부품은 재고 상태와 지리적 조건이 허용하는 경우 다음 영업일 납품이 가능하도록 배송이 이루어집니다. 지리적 조건이 허용하는 경우 추가 비용이 청구되는 조건으로 당일 또는 4시간 배송이 가능할 수도 있습니다. 도움이 필요하시면 Hewlett Packard Enterprise Support Center로 전화하십시오. 전문 기술자가 전화로 도움을 줄 것입니다. Hewlett Packard Enterprise는 결함이 발생한 부품을 Hewlett Packard Enterprise로 반환해야 하는지 여부를 CSR 교체 부품과 함께 배송된 자료에 지정합니다. 결함이 발생한 부품을 Hewlett Packard Enterprise로 반환해야 하는 경우에는 지정된 기간 내(통상 영업일 기준 5일)에 Hewlett Packard Enterprise로 반환해야 합니다. 이때 결함이 발생한 부품은 제공된 포장 재료에 넣어 관련 설명서와 함께 반환해야 합니다. 결함이 발생한 부품을 반환하지 않는 경우 Hewlett Packard Enterprise가 교체 부품에 대해 비용을 청구할 수 있습니다. 고객 셀프 수리의 경우, Hewlett Packard Enterprise는 모든 운송 및 부품 반환 비용을 부담하며 이용할 운송업체 및 택배 서비스를 결정합니다.

Hewlett Packard Enterprise CSR 프로그램에 대한 자세한 내용은 가까운 서비스 제공업체에 문의하십시오. 북미 지역의 프로그램에 대해서는 Hewlett Packard Enterprise CSR 웹 사이트(http://www.hpe.com/support/selfrepair)를 참조하십시오.

Remote support

Remote support is available with supported devices as part of your warranty or contractual support agreement. It provides intelligent event diagnosis, and automatic, secure submission of hardware event notifications to Hewlett Packard Enterprise, which will initiate a fast and accurate resolution based on your product's service level. Hewlett Packard Enterprise strongly recommends that you register your device for remote support.

For more information and device support details, go to the Insight Remote Support website (http://www.hpe.com/info/insightremotesupport/docs).

Acronyms and abbreviations

ABEND

abnormal end

ACU

Array Configuration Utility

AMP

Advanced Memory Protection

ASR

Automatic Server Recovery

CSA

Canadian Standards Association

CSR

Customer Self Repair

DDR

double data rate

DPC

DIMMs per channel

FBWC

flash-backed write cache

IEC

International Electrotechnical Commission

iLO

Integrated Lights-Out

IML

Integrated Management Log

LFF

large form factor

LRDIMM

load reduced dual in-line memory module

NMI

nonmaskable interrupt

NVRAM

nonvolatile memory

ORCA

Option ROM Configuration for Arrays

PCIe

Peripheral Component Interconnect Express

PDU

protocol data unit

POST

Power-On Self Test

PPM

processor power module

PSP

HPE ProLiant Support Pack

RBSU

ROM-Based Setup Utility

RDIMM

registered dual in-line memory module

RDP

Rapid Deployment Pack

RPS

redundant power supply

SAS

serial attached SCSI

SFF

small form factor

SIM

Systems Insight Manager

TMRA

recommended ambient operating temperature

UDIMM

unregistered dual in-line memory module

UID

unit identification

UPS

uninterruptible power system

USB

universal serial bus

VCA

Version Control Agent

Documentation feedback

Hewlett Packard Enterprise is committed to providing documentation that meets your needs. To help us improve the documentation, send any errors, suggestions, or comments to Documentation Feedback (mailto:docsfeedback@hpe.com). When submitting your feedback, include the document title, part number, edition, and publication date located on the front cover of the document. For online help content, include the product name, product version, help edition, and publication date located on the legal notices page.

Index

A

access panel 21, 22
Active Health System 105, 106
ACU (Array Configuration Utility) 105
Advanced ECC memory 61, 111
airflow requirements 29, 31
AMP (Advanced Memory Protection) 111
AMP modes 111
ASR (Automatic Server Recovery) 112
authorized reseller 120, 124
auto-configuration process 110
Automatic Server Recovery (ASR) 112

B

Basic Input/Output System (BIOS) 105, 112
battery 116
Belarus Kazakhstan Russia marking 118
bezel 19, 21
BIOS (Basic Input/Output System) 105, 112
BIOS upgrade 105, 112
boot options 110
BSMI notice 118
buttons 6

C

cable options 41
cables 72, 103
cabling 103, 104
cache module 78
Canadian notice 118
cautions 30, 31, 120
Change Control 114
change control and proactive notification 114
components 6
configuration of system 39, 105
configuring AMP modes 111
connectors 6
contacting Hewlett Packard Enterprise 124
controller options 76
crash dump analysis 12

D

data cabling 103
Declaration of Conformity 118, 119
device numbers 14
diagnosing problems 115
diagnostic tools 108, 112
diagnostics utility 108
DIMM slots 11
DIMMs 58
DIMMs, installation 57
downloading files 124
drive cage, installing 83, 86
drive LEDs 15
drivers 113
drives, installing 68
DVD-ROM drive 26

E

Eight-bay SFF drive cage 83
electrical grounding requirements 30
electrostatic discharge 120
environmental requirements 28, 121
Erase Utility 105
error messages 115
EuroAsian Economic Commission 118
European Union notice 118
expansion boards 69
extending server from rack 22

F

fan cage 25
fans 16, 80
fans, removing 24, 28
FBWC module 78
features 6, 111
firmware update 109, 114
firmware upgrade utility, troubleshooting 115
firmware, updating 109, 114
firmware, upgrading 114
front panel components 6
front panel LEDs 7

G

graphic card option 72
grounding methods 120
grounding requirements 30, 120

H

hard drive blanks 68
hard drive LEDs 15
hard drives, determining status of 15
hardware options 41
hardware options installation 32, 41
health driver 112

heatsink levers 49
help resources 124
Hewlett Packard Enterprise contact information 124
Hewlett Packard Enterprise website 124
HP Smart Update Manager overview 105, 109
HP technical support 124, 132
HPE iLO Management Engine 105
HPE Insight Diagnostics 108
HPE Insight Diagnostics survey functionality 108
HPE Insight Remote Support software 108
HPE support services 28, 108, 124

I

identifying components 6
iLO (Integrated Lights-Out) 105, 106, 107
IML (Integrated Management Log) 105, 107
Insight Diagnostics 108, 113
installing operating system 40
Integrated Lights-Out (iLO) 107
Integrated Management Log (IML) 107
Intelligent Provisioning 107, 108
internal cables 103

J

Japanese notice 118

L

LEDs, hard drive 15
lockstep memory 60

M

maintenance guidelines 113
media bay blank 27
media device data cabling 104
memory 55, 58, 60
memory configurations 59, 60
memory options 55
memory subsystem architecture 56
memory, Advanced ECC 60, 111
memory, online spare 60, 111

N

NIC connectors 8
NMI functionality 12
NMI header 12

O

online spare memory 60, 61, 111
operating system version support 114
operating systems 114
operating systems supported 105, 108, 114
optical drive cage 62
optimum environment 28
Option ROM Configuration for Arrays (ORCA) 105, 112
options installation 32, 41
ORCA (Option ROM Configuration for Arrays) 105, 112

P

passwords 101
power distribution unit (PDU) 30
power LEDs, system 7
power requirements 29
power supply specifications 121, 122, 123
powering down 18
powering up 18
preparation procedures 18
proactive notification 114
problem diagnosis 115
processor option 43, 49
Product ID 111

Q

QuickSpecs 99, 105

R

rack bezel 18, 20, 21
rack installation 28, 30, 33
rack resources 28
RBSU (ROM-Based Setup Utility) 105, 109, 110, 111
RBSU configuration 109
rear panel components 8
rear panel LEDs 9
recovery key 101
redundant power supply cable connector 17
redundant ROM 113
registering the server 40
regulatory compliance notices 118, 119
remote support and analysis tools 108
ROM redundancy 113
ROM-Based Setup Utility (RBSU) 99, 109
ROMPaq utility 105, 112, 113

S

safety considerations 113, 118, 120
safety information 113, 118
SAS and SATA device numbers 14
SAS drive numbers 14
scripted installation 108
scripting toolkit 105, 108
security bezel, removing 19
serial number 111
server features and options 41
Server mode 105
server specifications 121
server warnings and cautions 31

server, installation 33
Service Pack for ProLiant 105, 108, 109
SFF drive cage 83
shipping carton contents 31
site requirements 28, 29
six-bay LFF backplane 86
Smart Update Manager 105, 109
software 114
software upgrades 114
space requirements 28
specifications, server 121
static electricity 120
storage controller 76
support services 28, 108, 124
supported operating systems 114
system board battery 116
system board components 10
system components 6
system configuration settings 11, 113
system maintenance switch 11
system, keeping current 113
Systems Insight Display LED combinations 13
Systems Insight Display LEDs 13

T

Taiwan battery recycling notice 118
technical support 124
temperature requirements 29, 121
tower bezel, removing 19
tower server, setting up 32
tower-to-rack conversion 30
TPM (Trusted Platform Module) 99, 101
troubleshooting 115
troubleshooting resources 6, 103, 115, 121
troubleshooting, firmware upgrade utility 115
Trusted Platform Module (TPM) 99, 101

U

updating the system ROM 113
UPS (uninterruptible power supply) 29
USB support 113
utilities 105, 111
utilities, deployment 105, 108, 109

V

ventilation 28
Version Control 114
Version Control Agent (VCA) 114
Version Control Repository Manager (VCRM) 114

W

warnings 30, 31
website, Hewlett Packard Enterprise 124