HPE ProLiant ML370 G5 Server - Parts Support Guide

Part Number: External
Published: 2020
Edition: 1

HPE ProLiant ML370 G5 Server - Parts Support Guide

Abstract
This document will help you identify parts of the product and also gives a step-by-step instruction on how to remove and replace the components.

Part Number: External
Published: 2020
Edition: 1

© Copyright 2020 Hewlett Packard Enterprise Development LP

Notices

The information contained herein is subject to change without notice. The only warranties for Hewlett Packard Enterprise products and services are set forth in the express warranty statements accompanying such products and services. Nothing herein should be construed as constituting an additional warranty. Hewlett Packard Enterprise shall not be liable for technical or editorial errors or omissions contained herein.

Confidential computer software. Valid license from Hewlett Packard Enterprise required for possession, use, or copying. Consistent with FAR 12.211 and 12.212, Commercial Computer Software, Computer Software Documentation, and Technical Data for Commercial Items are licensed to the U.S. Government under vendor's standard commercial license.

Links to third-party websites take you outside the Hewlett Packard Enterprise website. Hewlett Packard Enterprise has no control over and is not responsible for information outside the Hewlett Packard Enterprise website.

Acknowledgments

Intel®, Itanium®, Optane™, Pentium®, Xeon®, Intel Inside®, and the Intel Inside logo are trademarks of Intel Corporation in the U.S. and other countries.
Microsoft® and Windows® are either registered trademarks or trademarks of Microsoft Corporation in the United States and/or other countries.
Adobe® and Acrobat® are trademarks of Adobe Systems Incorporated.
Java® and Oracle® are registered trademarks of Oracle and/or its affiliates.
UNIX® is a registered trademark of The Open Group.
All third-party marks are property of their respective owners.

Table of contents

Part Locator

- Front view 5
  - HPE System Insight Display 5
  - Front Panel LED and Buttons 6
  - Removable Media Bays 7
  - SAS SATA Hard Disk Drive 7
  - Hard drives bay 1-8 8
  - Hard drives bay 9-16 Optional drive cage 9
- Top view 9
- Back view 10
  - Real Panel Connectors 11
  - Hot plug power supply Primary Bay 12
  - Hot plug power supply blank Redundant bay 12
- Left View 13
- Internal view 13
  - System Fans 14
  - Power supply backplane 15
  - Smart Array Controller 15
  - Expansion Slots 16
  - System Board 16
  - System memory and memory board 17
  - Processor air baffle 17
  - Processor and heat-sink 18

Remove/Replace

- References
  - Precautions 18
  - Tools And Screws 19
- Procedures
  - Powerto The Server 20
  - Access Panel 20
  - Bezel (Rack) 21
  - Processor Air Baffle 21
  - Optical Device 22
  - Media Device Blank 23

Hard Drive Blank 23
Hot Plug Hard Drive 24
SATA/SAS Hard Drive Cage 24
Drive Cage Blank 25
Memory Module Tray And DIMM 26
Processor/Heatsink 26
Processor Power Module (PPM) 27
System Insight Display Panel 28
Systems Insight Display Tray 29
Fan 29
Fan Cage 30
PCI Retainer Clip 31
Smart Array Controller Board 31
Power Supply 32
Power Supply Blank 32
Power Supply Backplane 33
System Board 34
Video Connector Tray 35

Front view

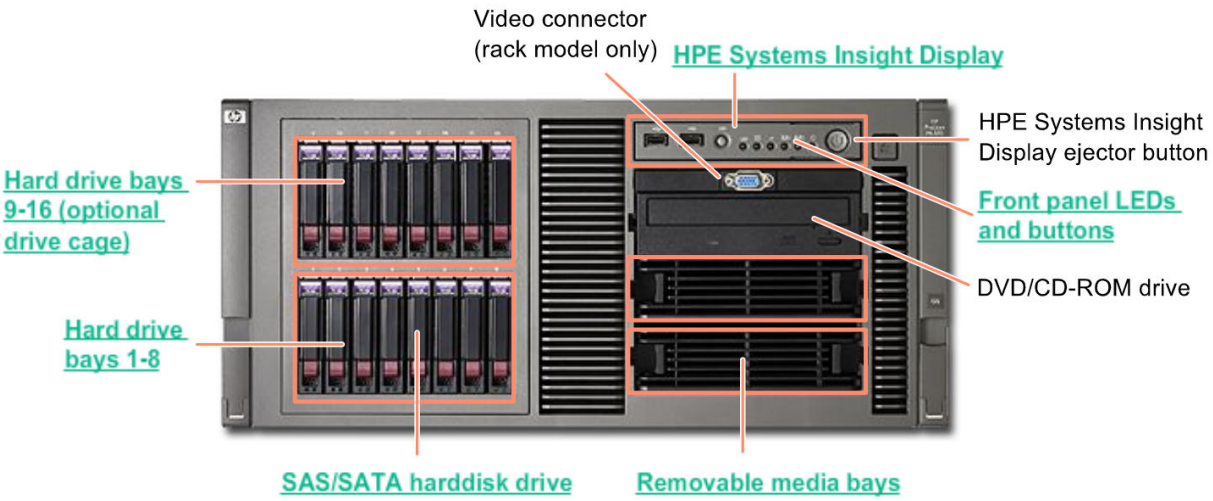

HPE System Insight Display

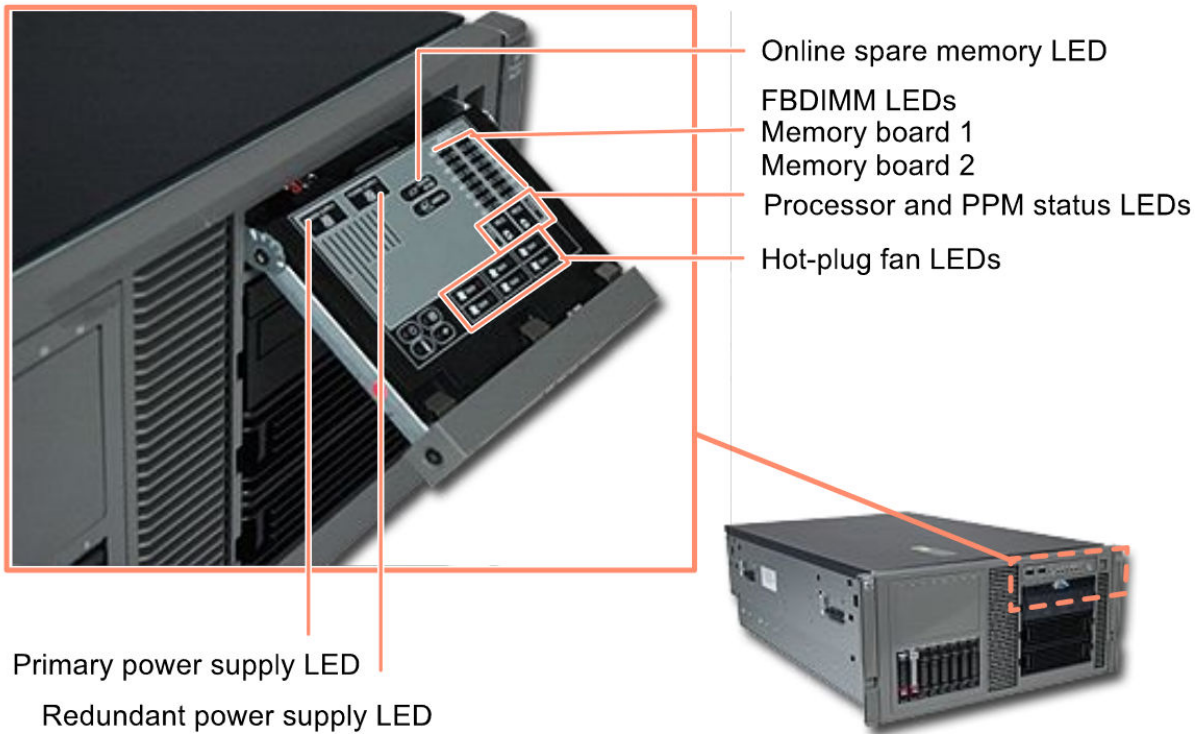

Front Panel LED and Buttons

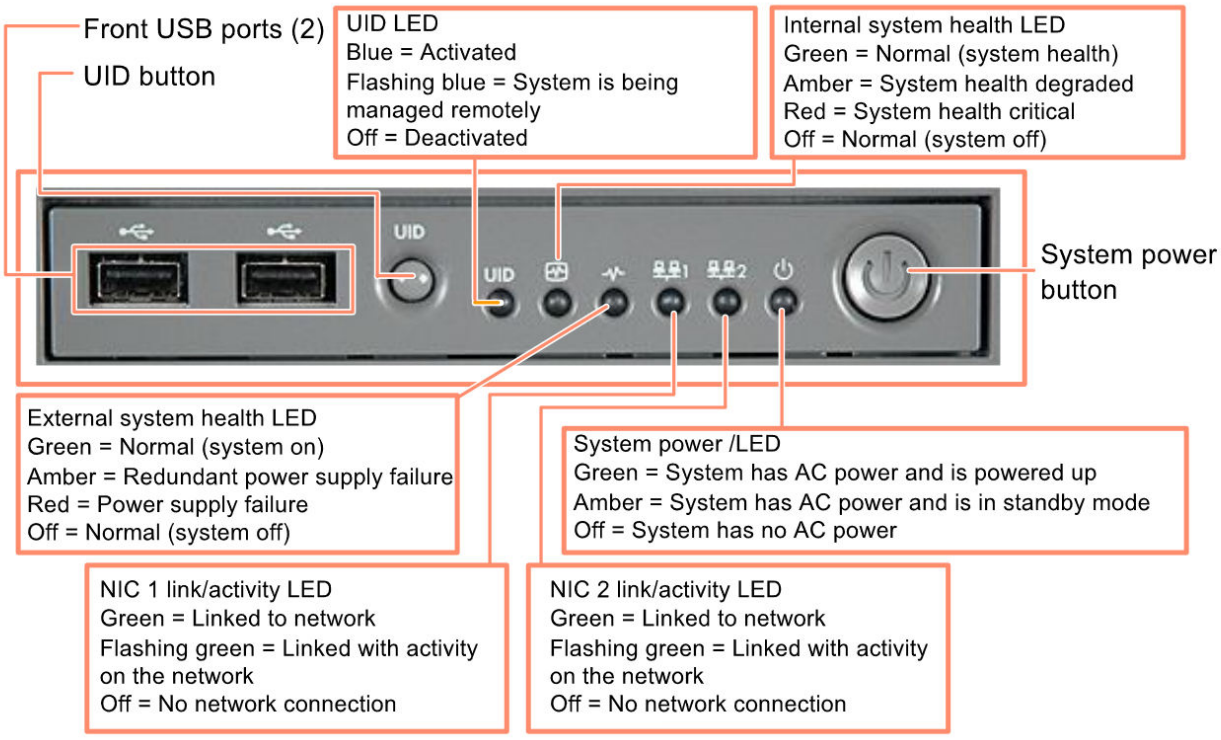

Removable Media Bays

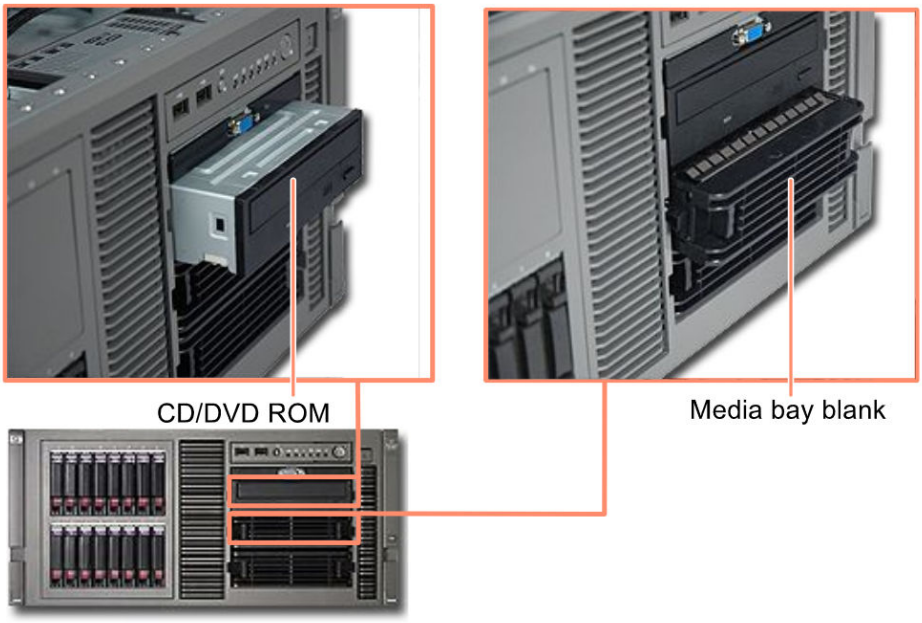

SAS SATA Hard Disk Drive



Hard drives bay 1-8

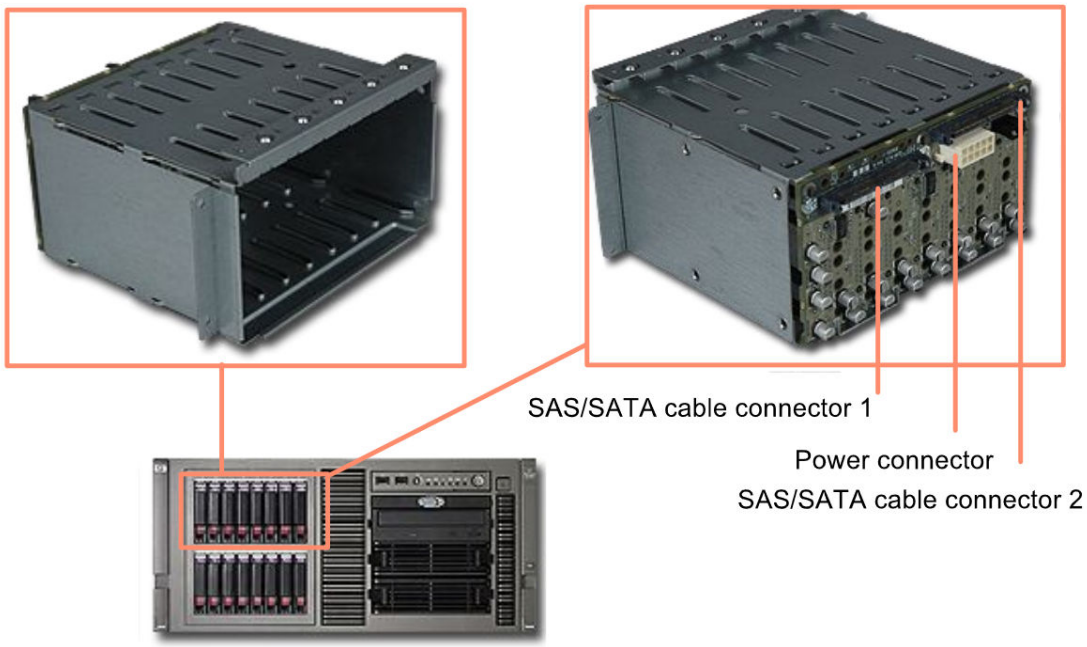

Hard drives bay 9-16 Optional drive cage

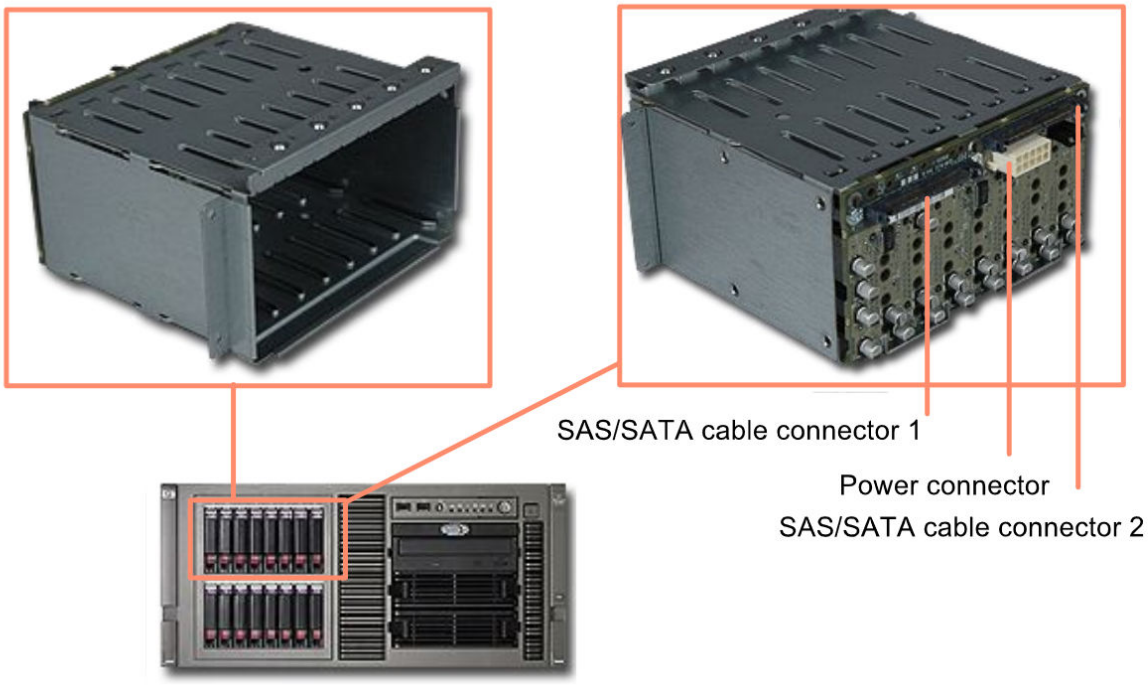

Top view



Back view

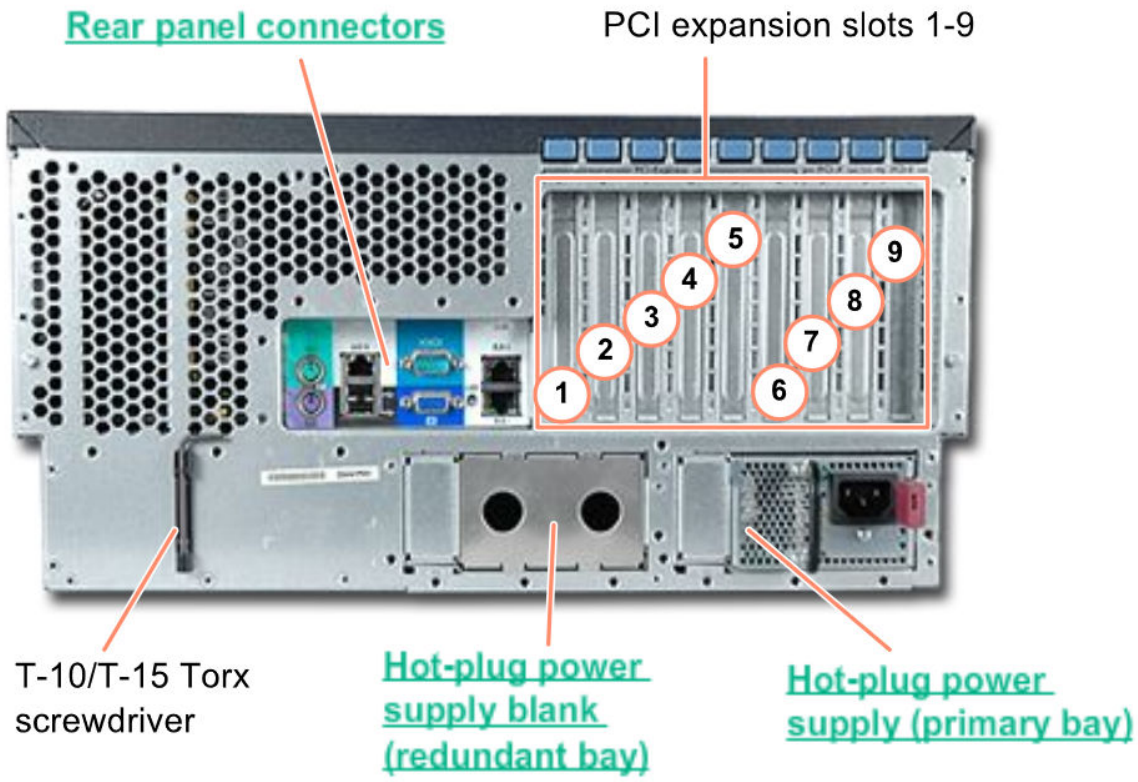

Real Panel Connectors

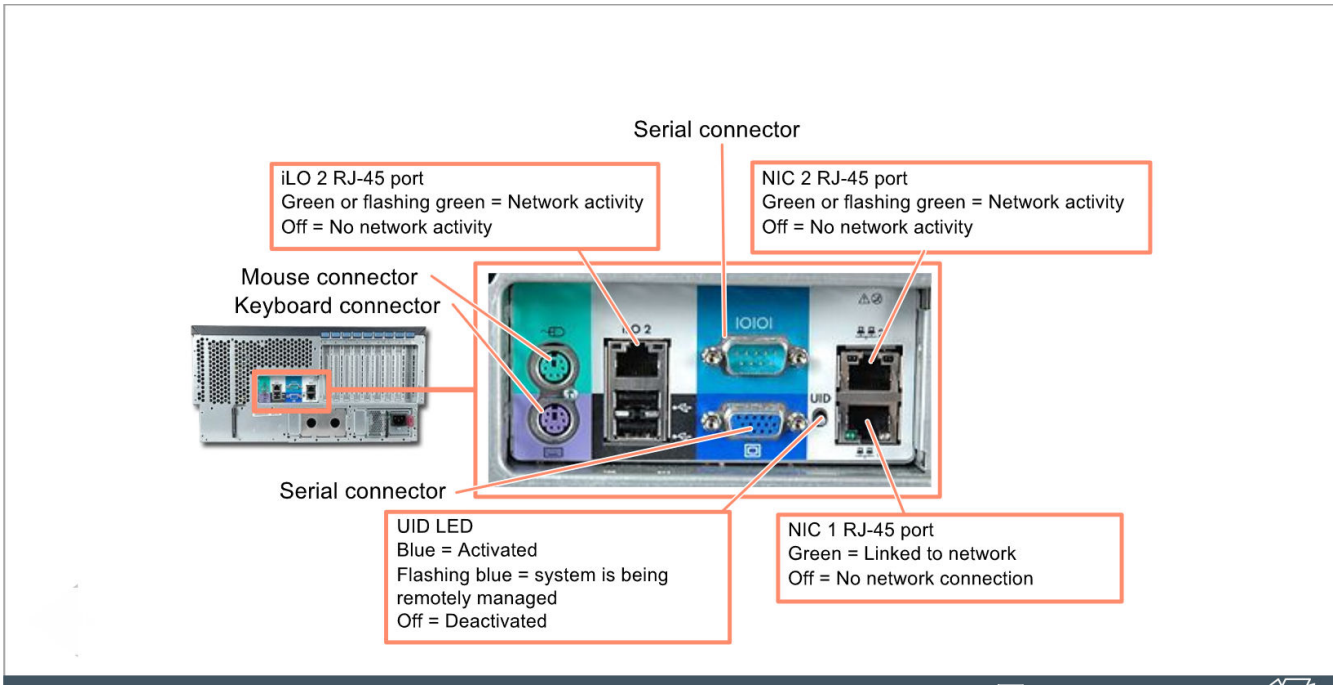

Hot plug power supply Primary Bay

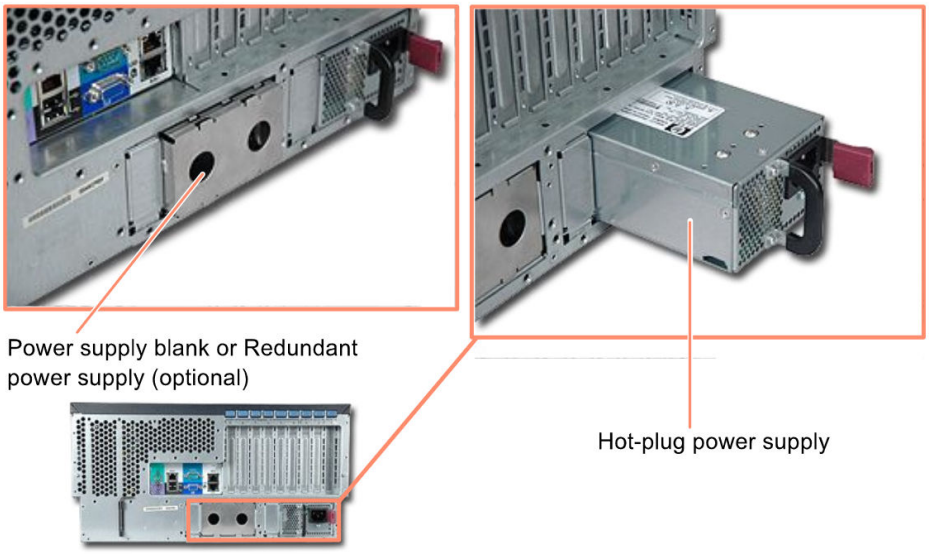

Hot plug power supply blank Redundant bay

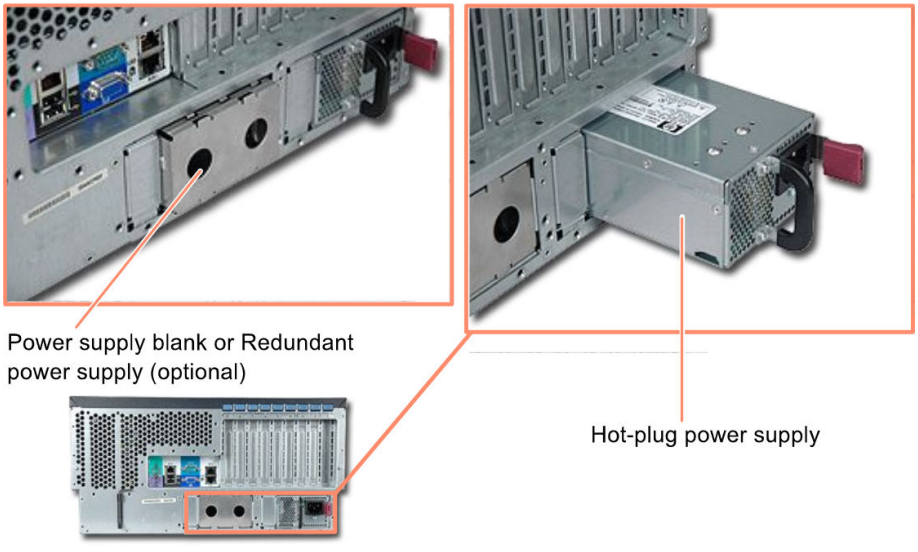

Left View



Internal view

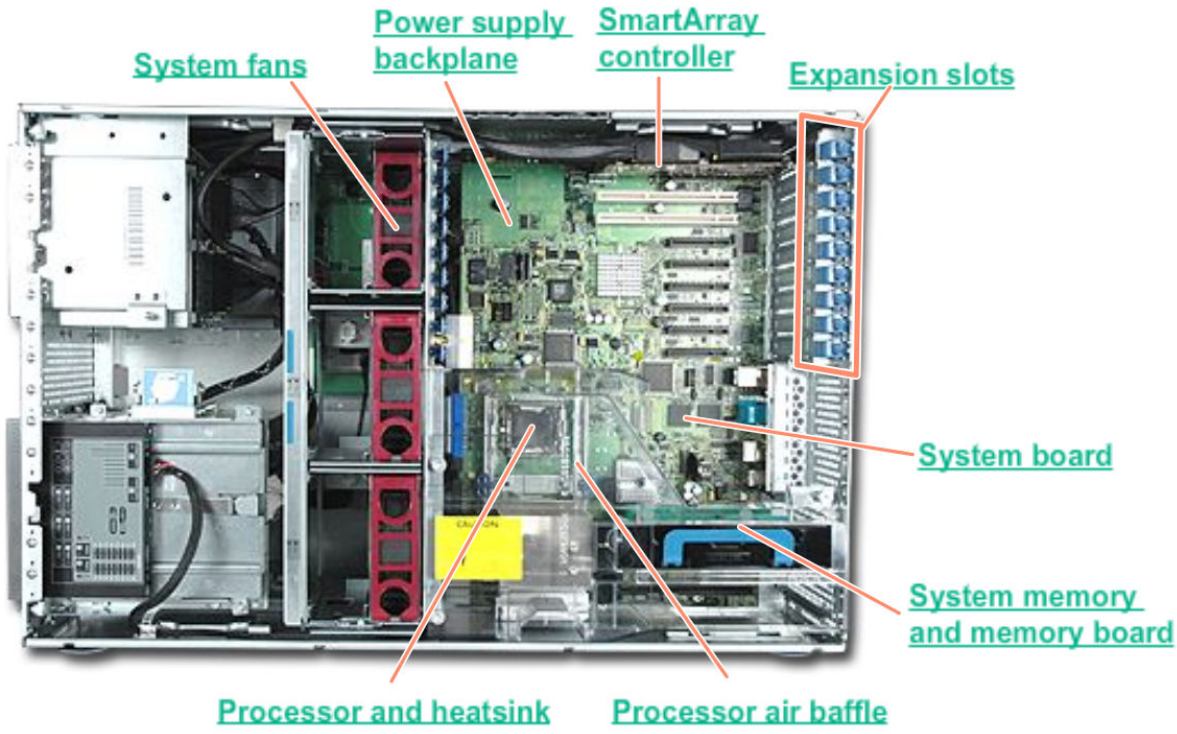
System fans
Power supply backplane
SmartArray controller
Expansion slots
System board
System memory and memory board
Processor and heatsink
Processor air baffle

System Fans

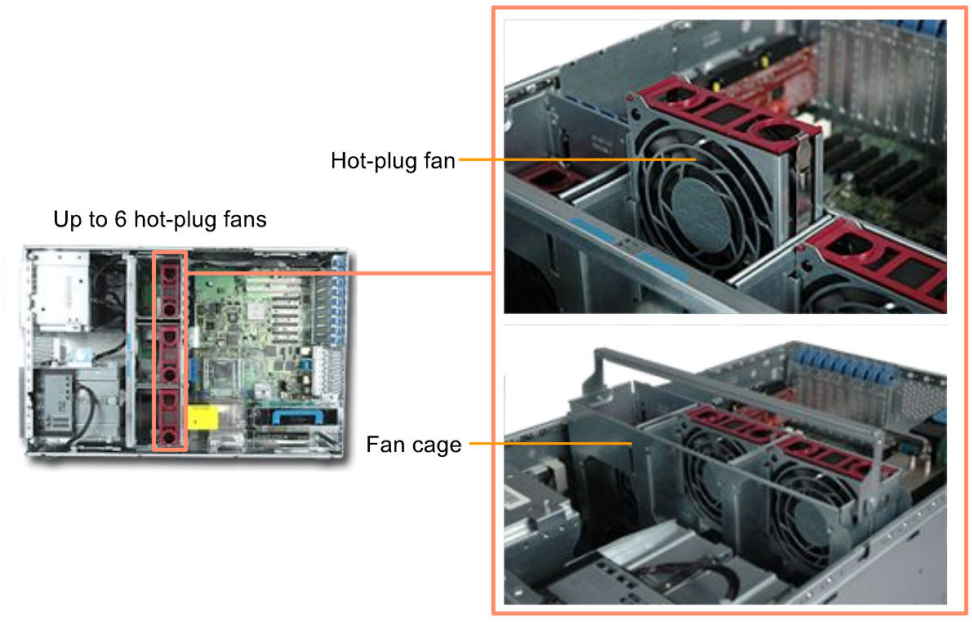
Hot-plug fan
Up to 6 hot-plug fans
Fan cage

Power supply backplane

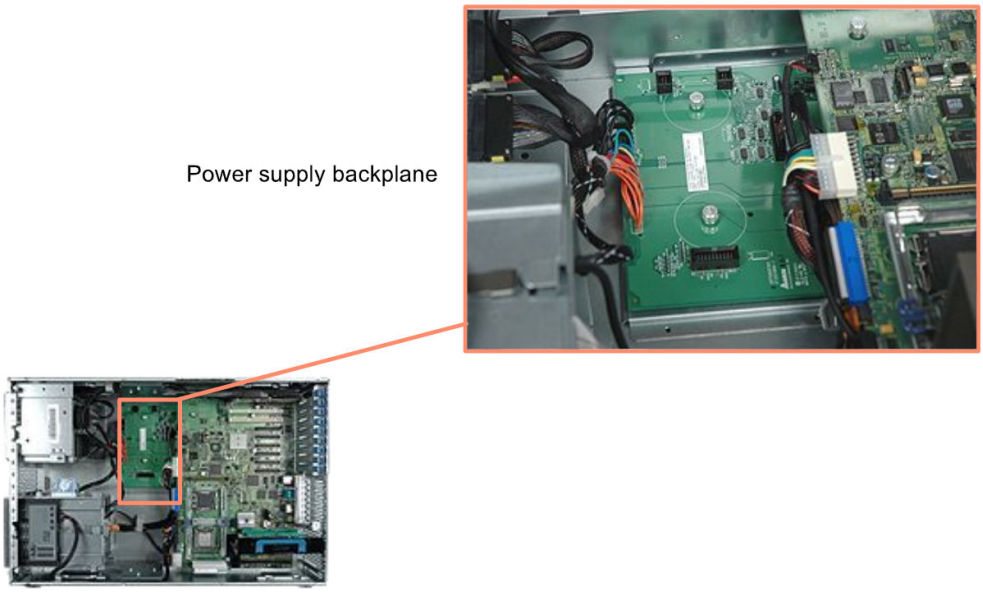

Smart Array Controller

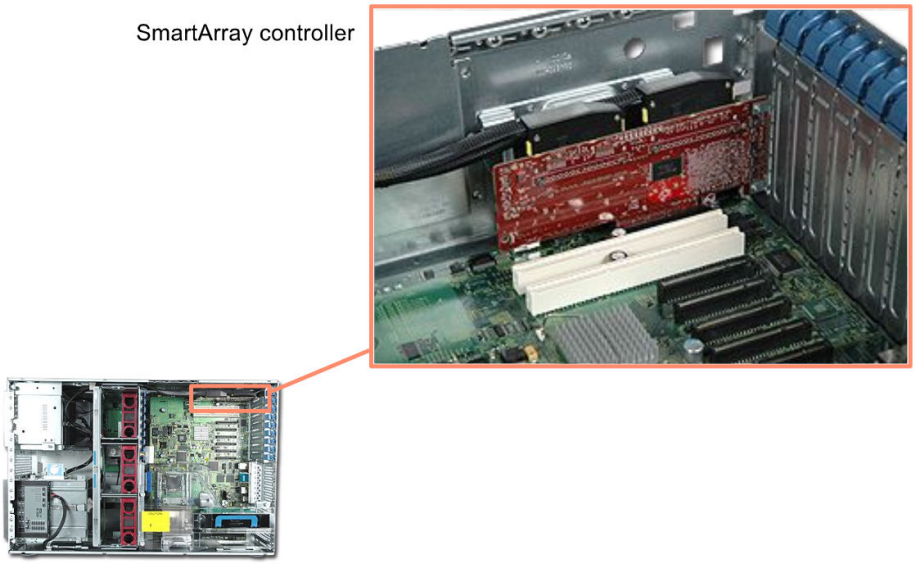

Expansion Slots

1 PCI Express slot 1, x4
2 PCI-X slot 2, 64-bit/133-MHz
3 PCI-X slot 3, 64-bit/133-MHz
4 PCI Express slot 4, x4
5 PCI Express slot 5, x4 (optional x8)
6 PCI Express slot 6, x4
7 PCI Express slot 7, x4 (optional x8)
8 PCI Express slot 8, x4
9 PCI Express slot 9, x4 (optional x8)

*(optional by adding bus expander)

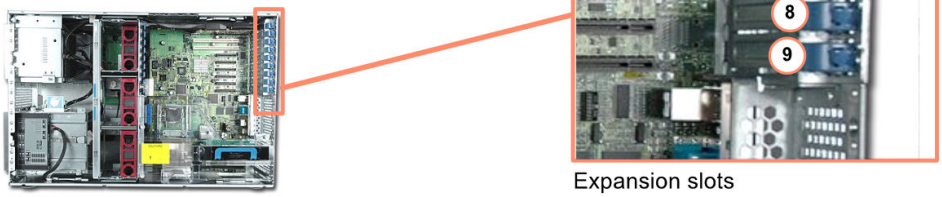

Expansion slots

System Board

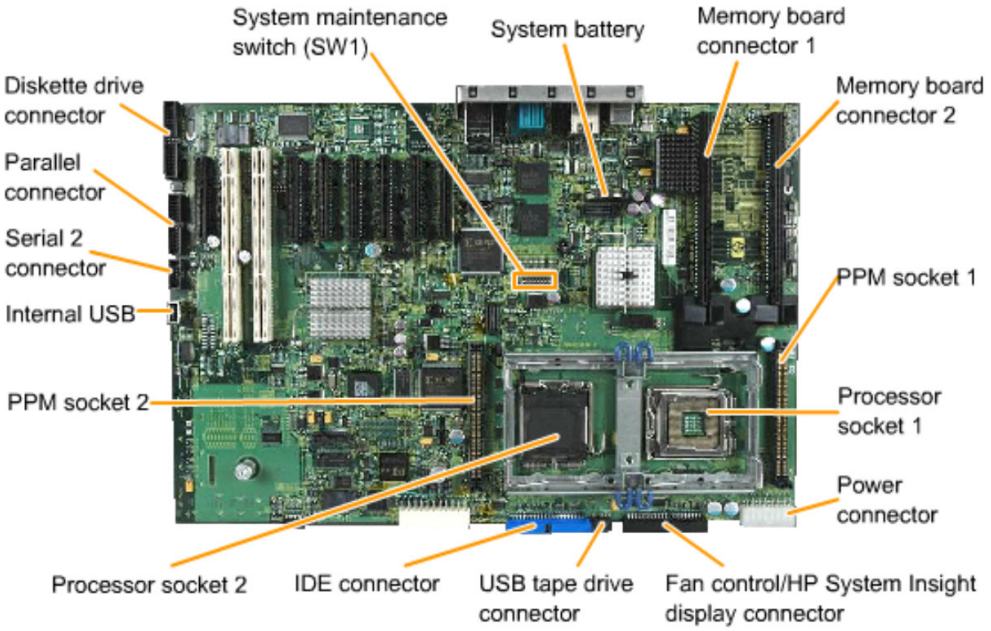

System memory and memory board

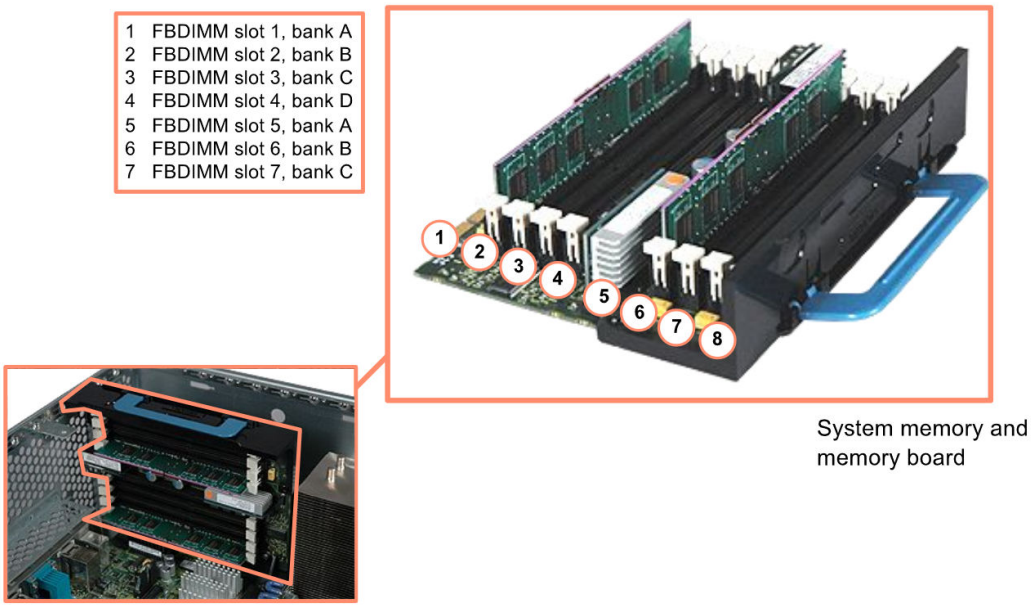

System memory and memory board

Processor air baffle

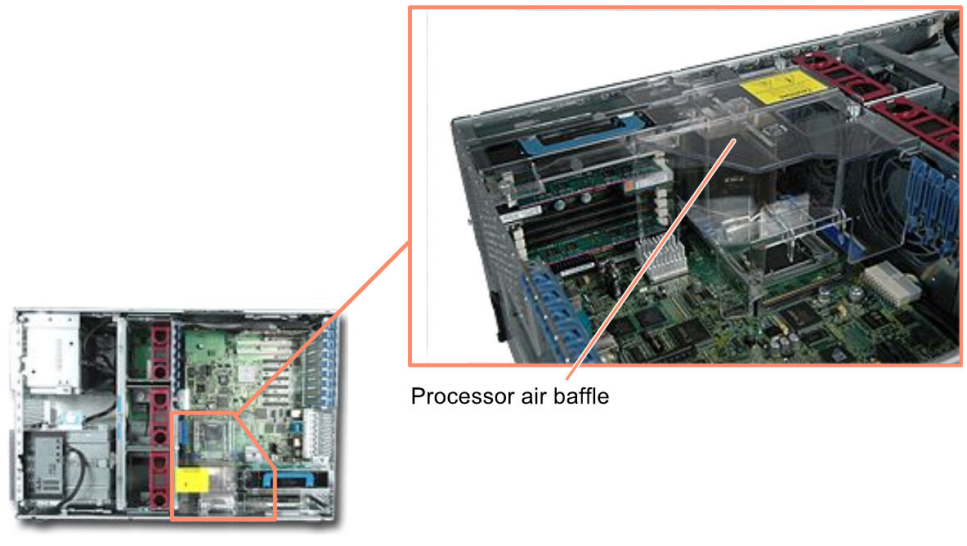

Processor air baffle

Processor and heat-sink

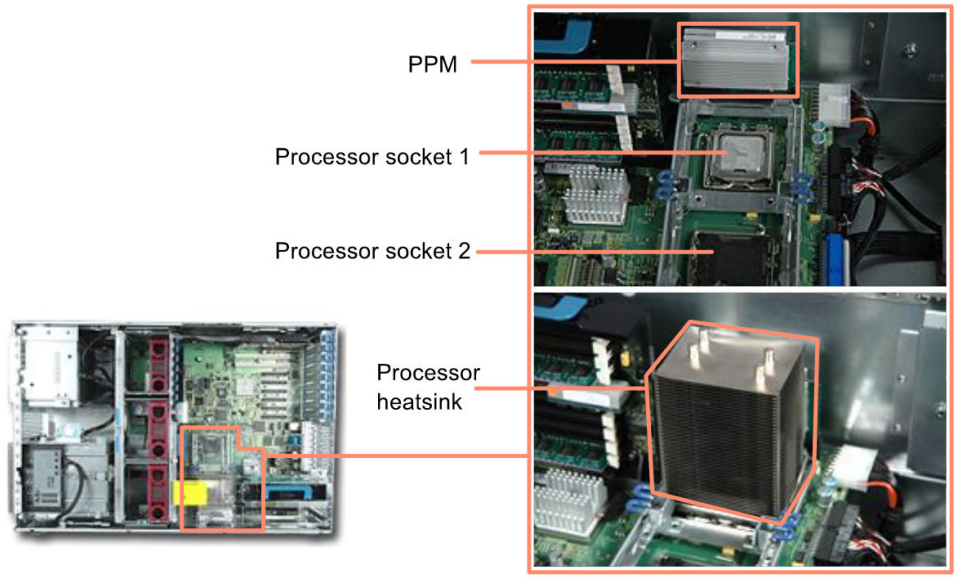

Precautions

Blanking panels and blanks

Always use blanking panels to fill all remaining empty front panel U-spaces in the rack. This arrangement ensures proper airflow. Using a rack without blanking panels results in improper cooling that can lead to thermal damage.

To prevent improper cooling and thermal damage, do not operate the server unless all bays including power supply and hard disk drive bays are populated with either a component or a blank.

Static electricity

Static electricity can damage electrical components. Before removing or replacing a component, touch a grounded metal object to discharge static electricity. Also observe the following precautions to prevent damage to electric components and accessories:

- To avoid hand contact, transport products in static-safe containers such as tubes, bags, or boxes.
- Protect all electrostatic parts and assemblies with conductive or approved containers or packaging.
- Keep electrostatic-sensitive parts in their containers until they arrive at static-free stations.
- Place items on a grounded surface before removing them from their container.
- Always be properly grounded when touching a sensitive component or assembly.
- Avoid contact with pins, leads, or circuitry.
- Place reusable electrostatic-sensitive parts from assemblies in protective packaging or conductive foam.

Disassembly

- During disassembly, label each cable as you remove it, noting its position and routing. This will make the replacement of the cables much easier, and will ensure that the cables are rerouted properly to protect the cables.
- Keep all screws with the units removed. There are two types of screws used in this server: a Torx-10 and a Torx-15. Using the wrong screw in a component could damage the unit.

Tools And Screws

Tools used in removal and replacement

- A Torx-10 and a Torx-15 screwdriver.
- A combination Torx-15/Torx-10 tool ships with the server.

Screws

Torx-15 screws

Notes: If worn or damaged screwdriver tips are used, the small screw heads could become stripped.





Powerto The Server

https://support.hpe.com/hpesc/public/videoDisplay?videoId=vpsg00002977en_us&noframe

Power

Note : For all non-hot plug procedures, you must remove power to the server.

1. Press the Power ON/Standby button.
2. Remove the power cord from the power supply.

Access Panel

https://support.hpe.com/hpesc/public/videoDisplay?videoId=vpsg00002978en_us&noframe

Access panel

Note: This shows the procedure for a rack model.

Before you begin

1. Remove power to the server.

Access panel removal

1. Using a T-15 screwdriver, turn the lock to the unlocked position.
2. Pull up on the latch to release the access panel.
3. Slide it back.

4. Lift it off of the server.

Access panel replacement

1. Set the access panel on the chassis about a half an inch from the rear.
2. Slide the access panel toward the front of the server.
3. Press down on the locking latch to engage the access panel.
4. Relock the latch.

Bezel (Rack)

https://support.hpe.com/hpesc/public/videoDisplay?videoId=vpsg00002979en_us&noframe

Bezel (Rack)

Before you begin

1. Remove power to the server.
2. Remove the access panel.

Bezel removal

1. Loosen the (2) thumbscrews.
2. Tilt the bezel out.
3. Pull it away from the server.

Bezel replacement

1. Position the bezel so that the top is tilted away from the server.
2. Align the tabs near the bottom of the bezel with the slots on the chassis.
3. Rotate the bezel into place.
4. Tighten the thumbscrews.

Processor Air Baffle

https://support.hpe.com/hpesc/public/videoDisplay?videoId=vpsg00002980en_us&noframe

Processor air baffle

Before you begin

1. Remove power to the server.
2. Remove the access panel.

Processor air baffle removal

1. Loosen the (3) thumbscrews.
2. Lift the baffle from the server.

Processor air baffle replacmeent

1. Position the baffle so that the (3) screws line up with the screw holes on the chassis.
2. Set the baffle on the chassis so that the opening fits over the memory module tray.
3. Tighten the thumbscrews.

Optical Device

https://support.hpe.com/hpesc/public/videoDisplay?videoId=vpsg00002981en_us&noframe

Optical device

Before you begin

1. Remove power to the server.
2. Remove the access panel.
3. Remove the baffle.
4. Remove any full-length expansion boards.
5. Remove the fan cage.

Optical device removal

1. Disconnect the data and power cables from the rear of the drive.
2. Press down on the media release latch located on the side of the media drive cage.

3. With one hand, push the drive from the back inside the server and slide it out of the front with the other hand.

Optical device replacement

1. Position the drive so that the label is facing up.
2. Slide the drive fully into the bay until it is fully seated.
3. Reconnect the data and power cables to the drive.

Media Device Blank

https://support.hpe.com/hpesc/public/videoDisplay?videoId=vpsg00002982en_us&noframe

Media device blank

Media device blank replacement

1. Squeeze the release tabs.
2. Slide the blank out of the server.

Media device blank removal

1. Slide the blank into the server until it clicks into place.

Hard Drive Blank

https://support.hpe.com/hpesc/public/videoDisplay?videoId=vpsg00002983en_us&noframe

Hard drive blank

Hard drive blank removal

1. Lift the release at the bottom of the blank.
2. Slide the blank out of the server.

Hard drive blank replacement

1. Position the release toward the bottom of the server.

2. Slide the blank into the server until it clicks into place.

Hot Plug Hard Drive

https://support.hpe.com/hpesc/public/videoDisplay?videoId=vpsg00002984en_us&noframe

Hot plug hard drive

Note : This is a hot plug procedure only if more than one drive is installed.

Hot plug hard drive removal

1. Press the ejector latch to release the handle.
2. Grasp the handle and pull it up.
3. Slide the drive from the server.

Hot plug hard drive replacement

1. With the ejector latch toward the bottom of the server, slide the drive into the bay until it connects to the backplane.
2. Press the handle so that it snaps in place under the ejector latch.

SATA/SAS Hard Drive Cage

https://support.hpe.com/hpesc/public/videoDisplay?videoId=vpsg00002985en_us&noframe

SATA/SAS hard drive cage

Before you begin

1. Remove power to the server.
2. Remove the access panel.
3. Remove the bezel.
4. Remove the hard drives and blanks.

SATA/SAS hard drive cage removal

1. Disconnect the data cables from the SATA/SAS backplane.
2. Disconnect the power cable from the SATA/SAS backplane.
3. Remove the (4) T-15 screws from the front of the server.
4. Slide the drive cage out of the server.

SATA/SAS hard drive cage replacement

1. Slide the drive cage into the server so that the screw holes line up.
2. Replace the screws.
3. Reconnect the power cable.
4. Reconnect the data cables.

Drive Cage Blank

https://support.hpe.com/hpesc/public/videoDisplay?videoId=vpsg00002986en_us&noframe

Drive cage blank

Before you begin

1. Remove power to the server.
2. Remove the access panel.
3. Remove the bezel.

Drive cage blank removal

1. Remove the (4) T-15 screws from the front of the server.
2. Slide the blank out of the server.

Drive cage blank replacement

1. Slide the blank into the server so that the screw holes line up.
2. Replace the screws.

Memory Module Tray And DIMM

https://support.hpe.com/hpesc/public/videoDisplay?videoId=vpsg00002987en_us&noframe

Memory module tray and DIMM

Before you begin

1. Remove power to the server.
2. Remove the access panel.
3. Remove the baffle.

Memory module tray removal

1. Lift the handle straight up.
2. Pull the tray up and out of the server.

DIMM removal

1. Press down on the latches on either side of the DIMM.
2. Pull the DIMM up and out of the server.

DIMM replacement

1. Align the DIMM with the slot and insert the DIMM firmly.
2. When fully seated, the DIMM slot latches lock into place.

Memory module tray replacement

1. Position the tray so that the DIMMs face the inside of the server.
2. Slide the tray down the channel on the rear of the chassis until the connector engages with the system board.
3. Press firmly to seat.

Processor/Heatsink

https://support.hpe.com/hpesc/public/videoDisplay?videoId=vpsg00002988en_us&noframe

Processor/heatsink

Before you begin

1. Remove power to the server.
2. Remove the access panel.
3. Remove the baffle.

Processor/heatsink removal

1. Press to release from the clip and lift the heatsink locking levers up and over about 100 degrees.
2. Lift the heatsink out of the server.
3. Press to release the processor locking lever and lift it up.
4. Lift the processor locking cover.
5. Lift the processor up and out of the server.

Applying thermal grease

Important: If you are replacing a previously installed processor, than you must clean the top of the processor and evenly reapply thermal grease.

Processor/heatsink installation or replacement

1. Install the processor on the connector so that the triangle on the processor lines up with the notch on the connector.
2. Close the processor locking cover.
3. Rotate and press down the processor locking lever to secure the cover and processor.
4. Set the heatsink on the processor so that the channels for the locking levers are on either side.
5. Rotate each locking lever down and press to secure under the clip.

Processor Power Module (PPM)

https://support.hpe.com/hpesc/public/videoDisplay?videoId=vpsg00002989en_us&noframe

Processor Power Module (PPM)

Before you begin

1. Remove power to the server.

2. Remove the access panel.
3. Remove the baffle.
4. Remove the memory module tray.

Processor power module removal

1. Grasp on either side and pull the processor power module up and out of the server.

Processor power module replacement

1. Align the processor power module with the slot
2. Press firmly to seat.

System Insight Display Panel

https://support.hpe.com/hpesc/public/videoDisplay?videoId=vpsg00002990en_us&noframe

Systems Insight Display panel

Before you begin

1. Remove power to the server.

Systems Insight Display panel removal

1. Press the System Insight Display panel ejector button.
2. Slide the panel [and tray] out fully.
3. The panel is on a hinge. Rotate it down.
4. Disconnect the power cable.
5. Remove the (2) T-10 screws that attach the panel to the hinge.
6. Pull the panel away from the tray.

Systems Insight Display panel replacement

1. Slide the System Insight Display tray out of the server fully.
2. With the panel facing forward, align screw holes on either side of the panel with the holes on the hinge of the System Insight Display tray.
3. Replace the screws.

4. Replace the power cable.
5. Rotate the panel up.
6. Slide the panel [and tray] into the server.

Systems Insight Display Tray

https://support.hpe.com/hpesc/public/videoDisplay?videoId=vpsg00002991en_us&noframe

Systems Insight Display

Before you begin

1. Remove power to the server.
2. Remove the System Insight Display panel.
3. Remove the access panel.

Systems Insight Display removal

1. Be sure that the slider on the tray is positioned inside the server.
2. Remove the (4) T-15 screws.
3. Lift the tray away from the server.

Systems Insight Display tray replacement

1. Set the tray on the chassis so that the ejector button slides through the opening and the screw holes of the tray and the chassis align.
2. Replace the (4) T-15 screws.

Fan

https://support.hpe.com/hpesc/public/videoDisplay?videoId=vpsg00002992en_us&noframe

Fan

Note: The fans are not hot plug if more than one fan has failed.

Before you begin

1. Remove the access panel.

Fan removal

1. With index finger and thumb, grasp the handle of the fan.
2. Pull the fan straight up.

Fan replacement

1. Position the fan so that the connector on the fan lines up with the connector on the board.
2. Slide the fan into place.

Fan Cage

https://support.hpe.com/hpesc/public/videoDisplay?videoId=vpsg00002993en_us&noframe

Fan cage

Before you begin

1. Remove power to the server.
2. Remove the access panel.
3. Remove the baffle.
4. Remove any full-length expansion boards.

Fan cage removal

1. Lift the handle up.
2. Using the handle, pull the fan cage straight up and out of the server.

Fan cage replacement

1. With the handle up, line the cage up with the channels on either side of the chassis. Take care not to catch the cables between the chassis and the cage when you lower the cage.
2. Slide the cage down until it seats in the chassis.
3. Rotate the handle closed.

PCI Retainer Clip

https://support.hpe.com/hpesc/public/videoDisplay?videoId=vpsg00002994en_us&noframe

PCI retainer clip

Before you begin

1. Remove power to the server.
2. Remove the access panel.
3. Remove full-length expansion boards if installed.

PCI retainer clip removal

1. Grasp and pull the tabs at the bottom of the clip.
2. Slide the clip down.
3. Pull it away from the fan cage.

PCI retainer clip replacement

1. Line the tabs up with the slot.
2. Push the clip up until it snaps in place.

Smart Array Controller Board

https://support.hpe.com/hpesc/public/videoDisplay?videoId=vpsg00002995en_us&noframe

Smart Array controller board

Before you begin

1. Remove power to the server.
2. Remove the access panel.

Smart Array controller board removal

1. Disconnect the SATA/SAS cables.
2. Press down on the tab of the PCI locking latch.

3. Rotate the latch back.
4. Grasp and pull the board up, and out of the server.

Smart Array controller board replacement

1. Line the board connector up with the connection on the system board.
2. Press down firmly to seat.
3. Rotate the PCI locking latch back to lock.
4. Reconnect the SATA/SAS cables.

Power Supply

https://support.hpe.com/hpesc/public/videoDisplay?videoId=vpsg00002996en_us&noframe

Power supply

Note: This is a hot plug procedure if more than one power supply is installed.

Power supply removal

1. Remove the power cord.
2. Push the power supply ejector latch toward the power supply handle.
3. Grasp the handle and pull the power supply out of the server.

Power supply replacement

1. Insert the power supply into the bay with the label side up.
2. Slide the power supply in until it is flush with the rear of the server.
3. Replace the power cord.

Power Supply Blank

https://support.hpe.com/hpesc/public/videoDisplay?videoId=vpsg00002997en_us&noframe

Power supply blank

Caution! Do not operate the server without either a power supply or power supply blank installed in the power supply bays.

Power supply blank removal

1. Insert index finger and thumb in the holes of the power supply blank.
2. Pull the blank out of the server.

Power Supply Backplane

https://support.hpe.com/hpesc/public/videoDisplay?videoId=vpsg00003000en_us&noframe

Power supply backplane

Before you begin

1. Remove power to the server.
2. Remove the power supplies.
3. Remove the access panel.
4. Remove the baffle.
5. Remove the fan cage.
6. Disconnect all power cables.
7. Remove the video connector cable from the system board.

Power supply backplane removal

1. Disconnect the System Insight Display cable.
2. Loosen the (2) thumbscrews.
3. Slide the backplane toward the front of the server to disengage it from the standoffs on the chassis.
4. Lift it out of the server.

Power supply backplane replacement

1. Position the backplane so that the keyholes line up with the standoffs on the chassis.
2. Slide it toward the rear of the server to engage the keyholes on the standoffs.

3. Tighten the thumbscrews.
4. Replace the System Insight Display cable.

System Board

https://support.hpe.com/hpesc/public/videoDisplay?videoId=vpsg00002999en_us&noframe

System board

Before you begin

1. Remove power to the server.
2. Remove the access panel.
3. Remove the baffle.
4. Remove the fan cage.
5. Remove the memory module tray.
6. Remove the heatsink and processor.
7. Remove the PPM.
8. Remove expansion boards if installed.
9. Disconnect the power and data cables from the system board.

System board removal

1. Loosen the (2) thumbscrews.
2. Slide the system board toward the front of the server.
3. Tilt the system board so that it clears the sides of the chassis.
4. Lift it out of the server.

System board replacement

1. Tilt the system board and insert it in the chassis.
2. Slide it toward the rear of the server to engage the board on the standoffs.
3. Tighten the thumbscrews.

Video Connector Tray

https://support.hpe.com/hpesc/public/videoDisplay?videoId=vpsg00003001en_us&noframe

Video connector tray

Before you begin

1. Remove power to the server.
2. Remove the access panel.
3. Remove the baffle.
4. Remove the fan cage.

Video connector tray removal

1. Disconnect the video connector cable from the system board.
2. Release the cable from the clip on the bottom of the chassis.
3. Press the media release latch down.
4. With one hand, reach into the server and push the cable from the rear.
5. With the other hand, slide the tray out of the front of the server.

Video connector tray replacement

1. Feed the video connector cable into the front of the server.
2. Position the tray so that the correct side is up (as indicated by the printing on the tray).
3. Slide the tray into the server until it clicks in place.
4. Reconnect the cable to the system board.
5. Secure the cable in the clip at the bottom of the chassis.