HPE Synergy 12000 Frame Maintenance and Service Guide

Part Number: 806423-009
Published: February 2025
Edition: 9

HPE Synergy 12000 Frame Maintenance and Service Guide

Abstract

This document describes identification, installation, and setup for the HPE Synergy System. This guide is for an experienced service technician. Hewlett Packard Enterprise assumes you are qualified in the servicing of the HPE Synergy components and overall solution.

Part Number: 806423-009
Published: February 2025
Edition: 9

© Copyright 2016-2025 Hewlett Packard Enterprise Development LP

Notices

The information contained herein is subject to change without notice. The only warranties for Hewlett Packard Enterprise products and services are set forth in the express warranty statements accompanying such products and services. Nothing herein should be construed as constituting an additional warranty. Hewlett Packard Enterprise shall not be liable for technical or editorial errors or omissions contained herein.

Confidential computer software. Valid license from Hewlett Packard Enterprise required for possession, use, or copying. Consistent with FAR 12.211 and 12.212, Commercial Computer Software, Computer Software Documentation, and Technical Data for Commercial Items are licensed to the U.S. Government under vendor's standard commercial license.

Links to third-party websites take you outside the Hewlett Packard Enterprise website. Hewlett Packard Enterprise has no control over and is not responsible for information outside the Hewlett Packard Enterprise website.

Table of contents

Illustrated parts catalog 7
- Mechanical components 7
  - Power supply blank spare part 8
  - Interconnect module blank spare part 9
  - Device bay blank spare part 9
  - Frame link module blank spare part 9
  - Rack rail kit spare part 10
  - Bezel assembly spare part 10
  - Frame lift handles spare part 10
  - Device bay shelf spare part 10
  - Device bay half shelf spare part 11
  - Appliance bay blank spare part 11
- System components 11
  - Hot-plug fan spare part 13
  - Dual slot power supply adapter spare part 13
  - Power supply spare part 13
  - Flex slot power supply spare part 14
  - Frame link module spare part 14
  - Appliance module spare part 15
  - Midplane assembly spare part 15
  - Fan interposer assembly spare part 15
  - Front panel assembly spare part 15
  - Interconnect module spare part 16
- Cables and miscellaneous components 17
  - Frame cabling spare part 17
  - Networking cable spare parts 17
  - Transceiver spare parts 21

Customer self repair 22

Removal and replacement procedures 32
- Required tools 33
- Appliance module support and documentation 33
- Safety considerations 33
  - Electrostatic discharge 34
  - Warnings, cautions, and important messages 35

Preparing the frame 36
Locating the frame in the rack 37
Powering down the compute module 37
Powering down the storage module 38
Powering down the appliance module 39
Powering down the frame 40
Powering down an HPE Synergy frame that is part of a multiframe management ring with Image Streamer 41
HPE Synergy Console connections 41
Connecting to the HPE Synergy Console using a laptop computer 42
Connecting to the HPE Synergy Console using a keyboard, video monitor, and mouse 43
Removing and replacing bezels 45
Removing and replacing a device bay blank 46
Removing and replacing a device bay shelf 49
Removing the half shelf 50
Replacing the half shelf 51
Replacing the half shelf 53
Removing and replacing an appliance bay blank 55
Removing and replacing a fan 56
Removing and replacing a frame lift handle 57
Removing and replacing a frame link module blank 59
Removing and replacing a frame link module 60
Removing and replacing a front panel assembly 61
Removing and replacing an interconnect module blank 63
Removing and replacing an interconnect module 64
Removing and replacing a power supply blank 65
Removing and replacing a power supply 66
Removing and replacing a dual slot power supply adapter 68
Removing and replacing a flex slot power supply 69
Removing and replacing a –48V DC power supply 71
Replacing the –48V DC power supply 73
Removing and replacing a rear cage 77
Removing and replacing the rack rails 79
Replacing the rack rails 80
Component and LED identification 83
Information pull tabs 83
Frame front components and device bays 86

Device bay numbering ... 87
Device bay partitions ... 88
Front panel components ... 92
Appliance module LEDs and components ... 93
Appliance bay numbering ... 96
Compute module LEDs and buttons ... 97
System power LED definitions ... 98
NVDIMM LED identification ... 99
NVDIMM-N LED combinations ... 99
NVDIMM Function LED patterns ... 100
Storage module LEDs ... 100
Frame rear components ... 102
Rear component bay numbering ... 104
Rear component bay numbering with flex slot power supplies ... 106
HPE Synergy 4-Port Frame Link Module components and LEDs ... 107
HPE Synergy Frame Link Module components and LEDs ... 110
Power supply LED ... 113
Flex slot power supply LED ... 113
Fan LED ... 114
HPE Synergy 10Gb Interconnect Link Module LEDs and buttons ... 115
HPE Synergy 10Gb Interconnect Module interconnect link port ... 116
HPE Synergy 20Gb Interconnect Link Module LEDs and buttons ... 117
HPE Synergy 20Gb Interconnect Link Module interconnect link ports ... 117
HPE Synergy 50Gb Interconnect Link Module LEDs and buttons ... 118
HPE Synergy 50Gb Interconnect Link Module interconnect link ports ... 119
HPE Virtual Connect SE 100Gb F32 Module for HPE Synergy LEDs and buttons ... 120
HPE Virtual Connect SE 100Gb F32 Module for HPE Synergy components ... 123
HPE Virtual Connect SE 40Gb F8 Module for HPE Synergy LEDs and buttons ... 124
HPE Virtual Connect SE 40Gb F8 Module for HPE Synergy components ... 127
HPE Synergy 40Gb F8 Switch Module LEDs and buttons ... 127
HPE Synergy 40Gb F8 Switch Module components ... 130
Mellanox SH2200 Switch Module for HPE Synergy LEDs and components ... 131
HPE Synergy Cabling ... 132
HPE Synergy documentation resources ... 132
HPE Synergy firmware update resources ... 133
HPE Synergy documentation map ... 133
Specifications ... 134
HPE Synergy QuickSpecs ... 135

Websites....135
Support and other resources....135
Accessing Hewlett Packard Enterprise Support....135
HPE product registration....136
Accessing updates....136
Remote support....137
Warranty information....138
Regulatory information....138
Documentation feedback....138

Illustrated parts catalog

This chapter lists the hardware spare parts supported by the frame.

Subtopics

Mechanical components
System components
Cables and miscellaneous components

Mechanical components

Hewlett Packard Enterprise continually improves and changes product parts. For complete and current supported parts information, see the Hewlett Packard Enterprise PartSurfer website **http://www.hpe.com/info/partssurfer**.

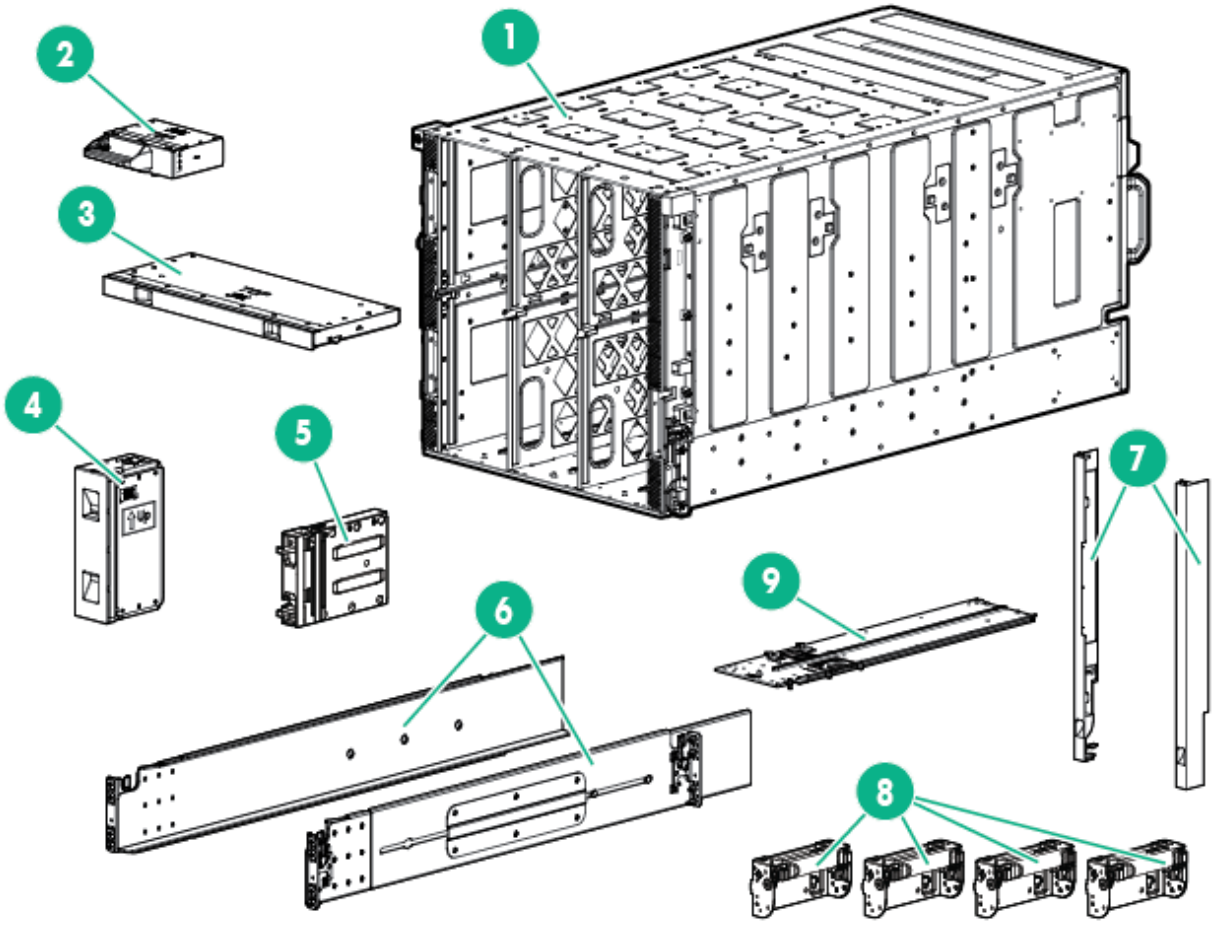

Item	Description
1	HPE Synergy 12000 Frame
2	Power supply blank spare part
3	Interconnect module blank spare part
4	Device bay blank spare part
5	Frame link module blank spare part
6	Rack rail kit spare part
7	Bezel assembly spare part
8	Frame lift handles spare part
9	Device bay shelf spare part
10	Device bay half shelf spare part [1]
11	Appliance bay blank spare part [1]

[1] Not shown

For more information, see "Removal and replacement procedures."

Subtopics

Power supply blank spare part
Interconnect module blank spare part
Device bay blank spare part
Frame link module blank spare part
Rack rail kit spare part
Bezel assembly spare part
Frame lift handles spare part
Device bay shelf spare part
Device bay half shelf spare part
Appliance bay blank spare part

Power supply blank spare part

Customer self repair: **mandatory**

Description	Spare part number
Power supply blank	813564-001

Interconnect module blank spare part

Customer self repair: **mandatory**

Description	Spare part number
Interconnect module blank	813563-001

Device bay blank spare part

Customer self repair: **mandatory**

Description	Spare part number
Device bay blank	813561-001

Frame link module blank spare part

Customer self repair: **mandatory**

Description	Spare part number
Frame link module blank	813560-001

Rack rail kit spare part

Customer self repair: **mandatory**

Description	Spare part number
Rack rail kit	813568-001

Bezel assembly spare part

Customer self repair: **mandatory**

Description	Spare part number
Bezel assembly (includes left and right)	813565-001

Frame lift handles spare part

Customer self repair: **mandatory**

Description	Spare part number
Frame lift handle	813567-001

Device bay shelf spare part

Customer self repair: **mandatory**

Description	Spare part number
Device bay shelf	813569-001

Device bay half shelf spare part

Customer self repair: **mandatory**

Description	Spare part number
Device bay half shelf	813570-001

Appliance bay blank spare part

Customer self repair: **mandatory**

Description	Spare part number
Appliance bay blank	813562-001

System components

Hewlett Packard Enterprise continually improves and changes product parts. For complete and current supported parts information, see the Hewlett Packard Enterprise PartSurfer website **http://www.hpe.com/info/partssurfer**.

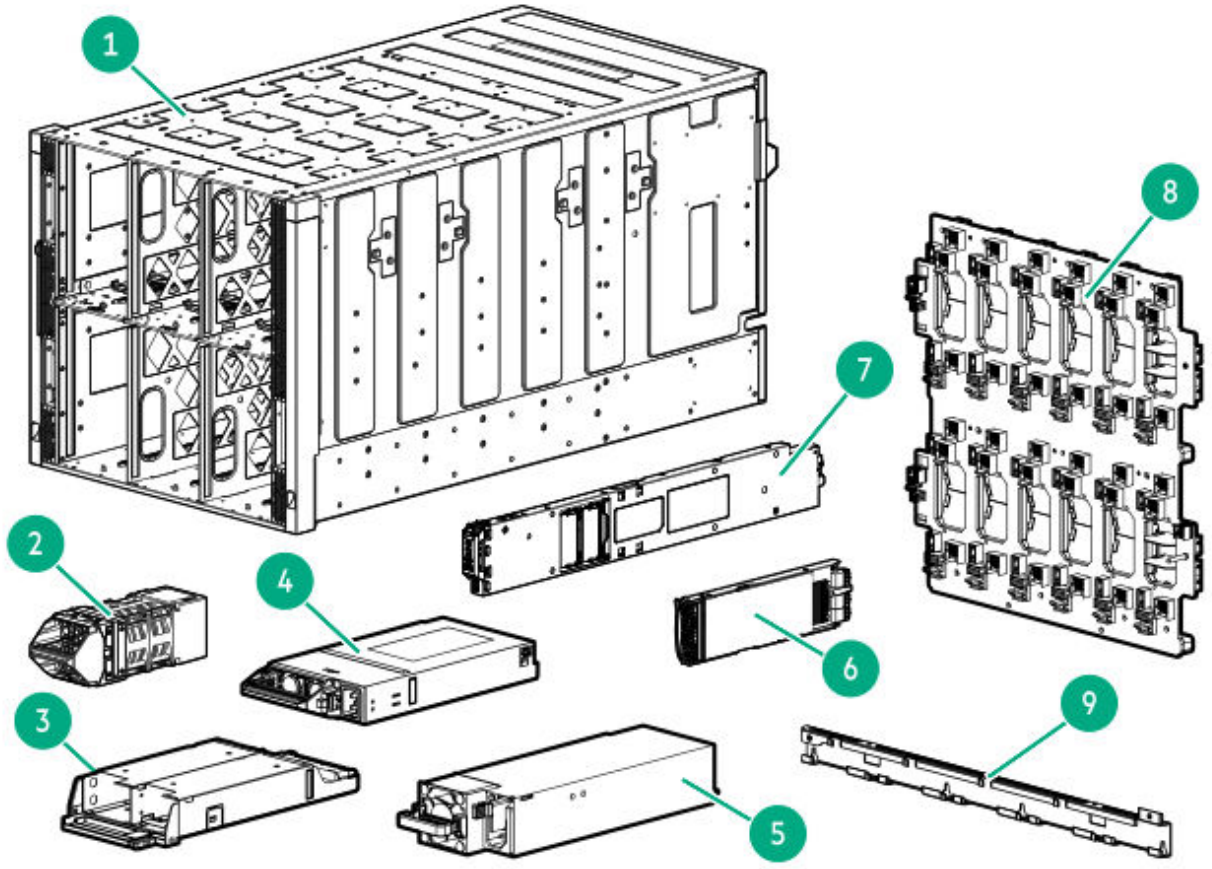

Item	Description
1	HPE Synergy 12000 Frame
2	Hot-plug fan spare part
3	Dual slot power supply adapter spare part
4	Power supply spare part
5	Flex slot power supply spare part
6	Frame link module spare part
7	Appliance module spare part
8	Midplane assembly spare part
9	Fan interposer assembly spare part
10	Front panel assembly spare part [1]
11	Interconnect module spare part [1]

[1] Not shown

For more information, see "Removal and replacement procedures."

Subtopics

Hot-plug fan spare part
Dual slot power supply adapter spare part
Power supply spare part
Flex slot power supply spare part
Frame link module spare part
Appliance module spare part
Midplane assembly spare part
Fan interposer assembly spare part
Front panel assembly spare part
Interconnect module spare part

Hot-plug fan spare part

Customer self repair: **mandatory**

Description	Spare part number
Synergy High Capacity Fan	P52789-001
Hot-plug fan	807967-001

Dual slot power supply adapter spare part

Customer self repair: **mandatory**

Description	Spare part number
Synergy Dual Slot PS Adapter	P56087-001

Power supply spare part

Customer self repair: **mandatory**

Description	Spare part number
3000W, hot plug	P28296-001
2900-3400W, hot plug, Platinum	882168-001
2650W, performance hot plug, Titanium Plus	813829-001
2650W, HV DC, hot plug	813833-001
2650W, 277V AC, hot plug	813832-001
2650W, -48V DC, hot plug (with lugs, screws, washers, nuts for cable termination)	813831-001

Flex slot power supply spare part

Customer self repair: **mandatory**

Description	Spare part number
1800-2200W, hot plug, Titanium	P44714-001

Frame link module spare part

Customer self repair: **mandatory**

Description	Spare part number
HPE Synergy Frame Link Module (2-port)	807963-001
HPE Synergy 4-Port Frame Link Module	P04749-001

Appliance module spare part

The appliance module removal and replacement procedures are available in the HPE Synergy Appliance Maintenance and Service Guide on the **Hewlett Packard Enterprise website**.

Midplane assembly spare part

Customer self repair: **no**

Description	Spare part number
Midplane assembly	869597-001

Fan interposer assembly spare part

Customer self repair: **no**

Description	Spare part number
Fan interposer assembly	807966-001

Front panel assembly spare part

Customer self repair: **mandatory**

Description	Spare part number
Front panel assembly	807965-001

Interconnect module spare part

Customer self repair: **Mandatory**

Virtual Connect master and satellite modules

Description	Spare part number
HPE Virtual Connect SE 100Gb F32 Module for HPE Synergy	879438-001
HPE Synergy 50Gb Interconnect Link Module	879437-001
HPE Virtual Connect SE 40Gb F8 Module for HPE Synergy	813174-001
HPE Synergy 10Gb Interconnect Link Module	785340-001
HPE Synergy 20Gb Interconnect Link Module	785341-001

Fibre Channel modules

Description	Spare part number
HPE Virtual Connect SE 32Gb FC Module for HPE Synergy	881769-001
Brocade 32Gb FC Fibre Channel Switch Module	882138-001
HPE Virtual Connect SE 16Gb Fibre Channel Module for HPE Synergy	785338-001
Brocade 16Gb/12 Fibre Channel SAN Switch for HPE Synergy	815264-001
Brocade 16Gb/24 Fibre Channel SAN Switch for HPE Synergy	815265-001
Brocade 16Gb Fibre Channel PowerPack+ Fibre Channel SAN Switch Module for HPE Synergy	815267-001

Ethernet modules

Description	Spare part number
HPE Synergy 40Gb F8 Switch Module	785339-001
HPE Synergy 10/40Gb Pass-Thru Module	826019-001
Mellanox SH2200 Switch Module for HPE Synergy	869162-001

Storage modules

Description	Spare part number
HPE Synergy 12Gb SAS Connection Module	758686-001

Cables and miscellaneous components

Hewlett Packard Enterprise continually improves and changes product parts. For complete and current supported parts information, see the Hewlett Packard Enterprise PartSurfer website **http://www.hpe.com/info/partssurfer**.

Spare parts are also available for miscellaneous cables and transceivers.

For more information, see "HPE Synergy Cabling."

Subtopics

Frame cabling spare part
Networking cable spare parts
Transceiver spare parts

Frame cabling spare part

Customer self repair: **mandatory**

Description	Spare part number
HPE Synergy 4p Frame Link Module USB Adapter (for HPE Synergy 4-Port Frame Link Module)	P06996-001

Networking cable spare parts

Customer self repair: **Mandatory**

Direct Attach Cables (DAC)

Description	Spare part number
HPE Synergy 300Gb Interconnect Link Direct Attach Cable, 2.10 m (82.68 in)	P00410-001

Description	Spare part number
HPE Synergy Interconnect Link Direct Attach Cable, 1.10 m (43.31 in)	818143-001
HPE Synergy Interconnect Link Direct Attach Cable, 1.60 m (62.99 in)	818144-001
HPE Synergy Interconnect Link Direct Attach Cable, 2.10 m (82.68 in)	818142-001
10G SFP+ DAC, 5.00 m (196.85 in)	538300-001
X240 40G QSFP+ DAC, 1.00 m (39.37 in)	JG326-61001
X240 40G QSFP+ DAC, 3.00 m (118.11 in)	JG327-61001
X240 40G QSFP+ DAC, 5.00 m (196.85 in)	JG328-61001
X240 10G SFP+ DAC, 3.00 m (118.11 in)	JD097-61301
X240 10G SFP+ DAC, 5.00 m (196.85 in)	JG081-61301
X240 QSFP+ 4x10G SFP+ DAC, 1.00 m (39.37 in)	JG329-61001
X240 QSFP+ 4x10G SFP+ DAC, 3.00 m (118.11 in)	JG330-61001
X240 QSFP+ 4x10G SFP+ DAC, 5.00 m (196.85 in)	JG331-61001
10G SFP+ DAC, 0.50 m (19.69 in)	487967-001
10G SFP+ DAC, 1.00 m (39.37 in)	487968-001
10G SFP+ DAC, 3.00 m (118.11 in)	487969-001
X242 10G + to SFP+ DAC, 3.00 m (118.11 in)	J9283-61201
40G QSFP+ DAC, 1.00 m (39.37 in)	746963-001
40G QSFP+ DAC, 3.00 m (118.11 in)	746964-001
40G QSFP+ DAC, 5.00 m (196.85 in)	746965-001
40G QSFP+ 4x10G SFP+ DAC, 3.00 m (118.11 in)	746970-001
40G QSFP+ 4x10G SFP+ DAC, 5.00 m (196.85 in)	746971-001
40G QSFP+ DAC, 0.35 m (13.78 in)	746969-001
HPE 100Gb QSFP28 to QSFP28 DAC, 3.00 m (118. 11 in)	850393-001

Active Optical Cables (AOC)

Description	Spare part number
HPE Synergy 300 Gb Interconnect Link AOC, 3.00 m (118.11 in)	P00404-001
HPE Synergy 300 Gb Interconnect Link AOC, 5.00 m (196.85 in)	P00405-001

Description	Spare part number
HPE Synergy 300 Gb Interconnect Link AOC, 15.00 m (590.55 in)	P00407-001
HPE Synergy Interconnect Link AOC, 3.00 m (118.11 in)	818138-001
HPE Synergy Interconnect Link AOC, 5.00 m (196.85 in)	818139-001
HPE Synergy Interconnect Link AOC, 10.00 m (393.70 in)	818140-001
HPE Synergy Interconnect Link AOC, 15.00 m (590.55 in)	818141-001
40G QSFP+ AOC, 7.00 m (275.59 in)	746966-001
40G QSFP+ AOC, 10.00 m (393.70 in)	746967-001
40G QSFP+ AOC, 15.00 m (590.55 in)	746968-001
QSFP+ to 4x10G SFP+ AOC optical cable assembly, 7.00 m (275.59 in)	746972-001
QSFP+ to 4x10G SFP+ AOC optical cable assembly, 10.00 m (393.70 in)	746973-001
QSFP+ to 4x10G SFP+ AOC optical cable assembly, 15.00 m (590.55 in)	746974-001
HPE 100Gb QSFP28 to QSFP28 AOC, 15.00 m (590.55 in)	849437-001
HPE 100Gb QSFP28 to QSFP28 AOC, 7.00 m (275.59 in)	850395-001

OM3 and OM4 fiber optic cables

Description	Spare part number
Multi-mode OM3 LC/LC FC cable, 0.50 m (19.69 in)	491023-001
Multi-mode OM3 LC/LC FC cable, 1.00 m (39.37 in)	491024-001
Multi-mode OM3 LC/LC FC cable, 2.00 m (78.74 in)	491025-001
Multi-mode OM3 LC/LC FC cable, 5.00 m (196.85 in)	491026-001
Multi-mode OM3 LC/LC FC cable, 15.00 m (590.55 in)	491027-001
Multi-mode OM3 LC/LC FC cable, 30.00 m (1,181.10 in)	491028-001

Description	Spare part number
Multi-mode OM3 LC/LC FC cable, 50.00 m (1,968.50 in)	491029-001
HPE Premier Flex LC/LC OM4 2f cable, 1.00 m (39.37 in)	656427-001
HPE Premier Flex LC/LC OM4 2f cable, 2.00 m (78.74 in)	656428-001
HPE Premier Flex LC/LC OM4 2f cable, 5.00 m (196.85 in)	656429-001
HPE Premier Flex LC/LC OM4 2f cable, 15.00 m (590.55 in)	656430-001
HPE Premier Flex LC/LC OM4 2f cable, 30.00 m (1,181.10 in)	656431-001
HPE Premier Flex LC/LC OM4 2f cable, 50.00 m (1,968.50 in)	656432-001
HPE Premier Flex MPO/MPO OM4 8f cable, 10.00 m (393.70 in)	656433-001
HPE Premier Flex MPO/MPO OM4 12f cable, 50.00 m (1,968.50 in)	656434-001
HPE Premier Flex MPO/MPO OM4 12f cable, 100 m (3937.01 in)	H6Z30-63001

SFP+ cables

Description	Spare part number
Passive Copper SFP+ cable, 3.00 m (118.11 in)	794511-001
Passive Copper SFP+ cable, 5.00 m (196.85 in)	794512-001
Active Copper SFP+ cable, 7.00 m (275.59 in)	653334-001
Active Copper SFP+ cable, 10.00 m (393.70 in)	653335-001
Active Copper SFP+ cable, 1.00 m (39.37 in)	574768-001
Active Copper SFP+ cable, 3.00 m (118.11 in)	574769-001
Active Copper SFP+ cable, 5.00 m (196.85 in)	574770-001

Fiber optic cable assembly

Description	Spare part number
MPO to 4 x LC cable, 5.00 m (196.85 in)	800867-001

Description	Spare part number
HMPO to 4 x LC cable, 15.00 m (590.55 in)	800868-001

Transceiver spare parts

Customer self repair: **Mandatory**

Description	Spare part number
HPE X150 100G QSFP28 MPO PSM4 500m SM Transceiver	JH420-61001
HPE X150 100G QSFP28 LC CWDM4 2KM SM Transceiver	JH673-61001
HPE 100Gb QSFP28 SWDM4 2km SM Transceiver	JH419-61001
HPE Synergy 100 GbE / 4x25 GbE / 4x32 Gb FC QSFP28 Transceiver	P00430-001
HPE 25Gb SFP28 SR 100m Transceiver	849442-001
HPE 100Gb QSFP28 MPO SR4 100m Transceiver	849443-001
HPE 100Gb QSFP28 Bidirectional Transceiver	849445-001
X130 10G SFP+ LC SR transceiver	JD092-61201
X130 10G SFP+ LC LR transceiver	JD094-61201
X130 10G SFP+ LC ER transceiver, 40 km (24.9 miles)	JG234-61101
X140 40G QSFP+ LC LR4 SM transceiver	JG661-61001
X140 40G QSFP+ MPO SR4 transceiver	JG325-61101
X140 40G QSFP+ CSR4 transceiver, 300 m (984 ft)	JG709-60001
HPE Synergy 40/4x10GbE/4x8GbFC QSFP Transceiver	826761-001
10 G Base-T SFP+ transceiver	826762-001
4x16 SW B-series QSFP transceiver	K2Q87-63001
8Gb SFP+ B-series long wave FC transceiver, 10 km (6.21 miles)	504441-001
8Gb SFP+Short Wave B-Series	670504-001
8Gb SFP B-series 25km FC SFP, 25 km (15.53 miles)	582640-001
8Gb SFP+ short wave FC transceiver	468508-001

Description	Spare part number
10G SFP+ SR transceiver (300 m (984 ft)	456096-001
10G SFP+ LR transceiver, 10 km (6.21 miles)	456097-001
16Gb SFP+ B-series short wave transceiver	793443-001
16Gb SFP B-series long wave FC transceiver, 25 km (15.53 miles)	H6Z29-63001
16Gb SFP+ B-series long wave transceiver, 10 km (6 .21 miles)	656436-001
16Gb SFP+ B-series short wave transceiver	656435-001
16Gb SFP+ short wave industrial extended transcei ver, 100 m (328 ft) for OM3 fiber optic cables and 1 25m (410 ft) for OM4 fiber optic cables	793443-001
40Gb QSFP+ bi-directional transceiver	868243-001
40 QSFP+ SR4 MPO transceiver, 100 m (328 ft)	746960-001
40G QSFP+ LC LR4 module	746961-001
40G QSFP+ SR4 MPO transceiver, 300 m (984 ft)	748742-001
HPE B-series 4x16 SW QSFP Transceiver	815268-001
40G QSFP+ to SFP+ adapter cable assembly	746962-001
HPE B-Series 32Gb SFP+ LW 1-pack Transceiver	855070-001
HPE B-Series 32 Gb SW SFP+ Transceiver	855073-001
HPE SY Dual 10GBASE-T QSFP 30m RJ45 Transcei ver	857498-001
HPE B-series 4x32Gb 1-pack Short Wave QSFP Tran sceiver	881754-001

Customer self repair

Hewlett Packard Enterprise products are designed with many Customer Self Repair (CSR) parts to minimize repair time and allow for greater flexibility in performing defective parts replacement. If during the diagnosis period Hewlett Packard Enterprise (or Hewlett Packard Enterprise service providers or service partners) identifies that the repair can be accomplished by the use of a CSR part, Hewlett Packard Enterprise will ship that part directly to you for replacement. There are two categories of CSR parts:

- **Mandatory**—Parts for which customer self repair is mandatory. If you request Hewlett Packard Enterprise to replace these parts, you will be charged for the travel and labor costs of this service.

- **Optional**—Parts for which customer self repair is optional. These parts are also designed for customer self repair. If, however, you require that Hewlett Packard Enterprise replace them for you, there may or may not be additional charges, depending on the type of warranty service designated for your product.

> **NOTE**
>
> Some Hewlett Packard Enterprise parts are not designed for customer self repair. In order to satisfy the customer warranty, Hewlett Packard Enterprise requires that an authorized service provider replace the part. These parts are identified as "No" in the Illustrated Parts Catalog.

Based on availability and where geography permits, CSR parts will be shipped for next business day delivery. Same day or four-hour delivery may be offered at an additional charge where geography permits. If assistance is required, you can contact the Hewlett Packard Enterprise Support Center and a technician will help you over the telephone or by electronic means. Hewlett Packard Enterprise specifies in the materials shipped with a replacement CSR part whether a defective part must be returned to Hewlett Packard Enterprise. In cases where it is required to return the defective part to Hewlett Packard Enterprise, you must ship the defective part back to Hewlett Packard Enterprise within a defined period of time, normally five (5) business days. The defective part must be returned with the associated documentation in the provided shipping material. Failure to return the defective part may result in Hewlett Packard Enterprise billing you for the replacement. With a customer self repair, Hewlett Packard Enterprise will pay all shipping and part return costs and determine the courier/carrier to be used.

For more information about the Hewlett Packard Enterprise CSR program, contact your local service provider.

Parts only warranty service

Your Hewlett Packard Enterprise Limited Warranty may include a parts only warranty service. Under the terms of parts only warranty service, Hewlett Packard Enterprise will provide replacement parts free of charge.

For parts only warranty service, CSR part replacement is mandatory. If you request Hewlett Packard Enterprise to replace these parts, you will be charged for the travel and labor costs of this service.

Réparation par le client (CSR)

Les produits Hewlett Packard Enterprise comportent de nombreuses pièces CSR (Customer Self Repair = réparation par le client) afin de minimiser les délais de réparation et faciliter le remplacement des pièces défectueuses. Si pendant la période de diagnostic, Hewlett Packard Enterprise (ou ses partenaires ou mainteneurs agréés) détermine que la réparation peut être effectuée à l'aide d'une pièce CSR, Hewlett Packard Enterprise vous l'envoie directement. Il existe deux catégories de pièces CSR :

- **Obligatoire—**Pièces pour lesquelles la réparation par le client est obligatoire. Si vous demandez à Hewlett Packard Enterprise de remplacer ces pièces, les coûts de déplacement et main d'œuvre du service vous seront facturés.
- **Facultatif—**Pièces pour lesquelles la réparation par le client est facultative. Ces pièces sont également conçues pour permettre au client d'effectuer lui-même la réparation. Toutefois, si vous demandez à

Hewlett Packard Enterprise de remplacer ces pièces, l'intervention peut ou non vous être facturée, selon le type de garantie applicable à votre produit.

REMARQUE: Certaines pièces Hewlett Packard Enterprise ne sont pas conçues pour permettre au client d'effectuer lui-même la réparation. Pour que la garantie puisse s'appliquer, Hewlett Packard Enterprise exige que le remplacement de la pièce soit effectué par un Mainteneur Agréé. Ces pièces sont identifiées par la mention "Non" dans le Catalogue illustré.

Les pièces CSR sont livrées le jour ouvré suivant, dans la limite des stocks disponibles et selon votre situation géographique. Si votre situation géographique le permet et que vous demandez une livraison le jour même ou dans les 4 heures, celle-ci vous sera facturée. Pour toute assistance, appelez le Centre d'assistance Hewlett Packard Enterprise pour qu'un technicien vous aide au téléphone Dans les documents envoyés avec la pièce de rechange CSR, Hewlett Packard Enterprise précise s'il est nécessaire de lui retourner la pièce défectueuse. Si c'est le cas, vous devez le faire dans le délai indiqué, généralement cinq (5) jours ouvrés. La pièce et sa documentation doivent être retournées dans l'emballage fourni. Si vous ne retournez pas la pièce défectueuse, Hewlett Packard Enterprise se réserve le droit de vous facturer les coûts de remplacement. Dans le cas d'une pièce CSR, Hewlett Packard Enterprise supporte l'ensemble des frais d'expédition et de retour, et détermine la société de courses ou le transporteur à utiliser.

Pour plus d'informations sur le programme CSR de Hewlett Packard Enterprise, contactez votre Mainteneur Agrée local.

Service de garantie "pièces seules"

Votre garantie limitée Hewlett Packard Enterprise peut inclure un service de garantie "pièces seules". Dans ce cas, les pièces de rechange fournies par Hewlett Packard Enterprise ne sont pas facturées.

Dans le cadre de ce service, la réparation des pièces CSR par le client est obligatoire. Si vous demandez à Hewlett Packard Enterprise de remplacer ces pièces, les coûts de déplacement et main d'œuvre du service vous seront facturés.

Riparazione da parte del cliente

Per abbreviare i tempi di riparazione e garantire una maggiore flessibilità nella sostituzione di parti difettose, i prodotti Hewlett Packard Enterprise sono realizzati con numerosi componenti che possono essere riparati direttamente dal cliente (CSR, Customer Self Repair). Se in fase di diagnostica Hewlett Packard Enterprise (o un centro di servizi o di assistenza Hewlett Packard Enterprise) identifica il guasto come riparabile mediante un ricambio CSR, Hewlett Packard Enterprise lo spedirà direttamente al cliente per la sostituzione. Vi sono due categorie di parti CSR:

- **Obbligatorie—**Parti che devono essere necessariamente riparate dal cliente. Se il cliente ne affida la riparazione ad Hewlett Packard Enterprise, deve sostenere le spese di spedizione e di manodopera per il servizio.
- **Opzionali—**Parti la cui riparazione da parte del cliente è facoltativa. Si tratta comunque di componenti progettati per questo scopo. Se tuttavia il cliente ne richiede la sostituzione ad Hewlett Packard Enterprise, potrebbe dover sostenere spese addizionali a seconda del tipo di garanzia previsto per il prodotto.

NOTA: alcuni componenti Hewlett Packard Enterprise non sono progettati per la riparazione da parte del cliente. Per rispettare la garanzia, Hewlett Packard Enterprise richiede che queste parti siano sostituite da un centro di assistenza autorizzato. Tali parti sono identificate da un "No" nel Catalogo illustrato dei componenti.

In base alla disponibilità e alla località geografica, le parti CSR vengono spedite con consegna entro il giorno lavorativo seguente. La consegna nel giorno stesso o entro quattro ore è offerta con un supplemento di costo solo in alcune zone. In caso di necessità si può richiedere l'assistenza telefonica di un addetto del centro di supporto tecnico Hewlett Packard Enterprise. Nel materiale fornito con una parte di ricambio CSR, Hewlett Packard Enterprise specifica se il cliente deve restituire dei component. Qualora sia richiesta la resa ad Hewlett Packard Enterprise del componente difettoso, lo si deve spedire ad Hewlett Packard Enterprise entro un determinato periodo di tempo, generalmente cinque (5) giorni lavorativi. Il componente difettoso deve essere restituito con la documentazione associata nell'imballo di spedizione fornito. La mancata restituzione del componente può comportare la fatturazione del ricambio da parte di Hewlett Packard Enterprise. Nel caso di riparazione da parte del cliente, Hewlett Packard Enterprise sostiene tutte le spese di spedizione e resa e sceglie il corriere/vettore da utilizzare.

Per ulteriori informazioni sul programma CSR di Hewlett Packard Enterprise, contattare il centro di assistenza di zona.

Servizio di garanzia per i soli componenti

La garanzia limitata Hewlett Packard Enterprise può includere un servizio di garanzia per i soli componenti. Nei termini di garanzia del servizio per i soli componenti, Hewlett Packard Enterprise fornirà gratuitamente le parti di ricambio.

Per il servizio di garanzia per i soli componenti è obbligatoria la formula CSR che prevede la riparazione da parte del cliente. Se il cliente invece richiede la sostituzione ad Hewlett Packard Enterprise dovrà sostenere le spese di spedizione e di manodopera per il servizio.

Customer Self Repair

Hewlett Packard Enterprise Produkte enthalten viele CSR-Teile (Customer Self Repair), um Reparaturzeiten zu minimieren und höhere Flexibilität beim Austausch defekter Bauteile zu ermöglichen. Wenn Hewlett Packard Enterprise (oder ein Hewlett Packard Enterprise Servicepartner) bei der Diagnose feststellt, dass das Produkt mithilfe eines CSR-Teils repariert werden kann, sendet Ihnen Hewlett Packard Enterprise dieses Bauteil zum Austausch direkt zu. CSR-Teile werden in zwei Kategorien unterteilt:

- **Zwingend**—Teile, für die das Customer Self Repair-Verfahren zwingend vorgegeben ist. Wenn Sie den Austausch dieser Teile von Hewlett Packard Enterprise vornehmen lassen, werden Ihnen die Anfahrt- und Arbeitskosten für diesen Service berechnet.
- **Optional**—Teile, für die das Customer Self Repair-Verfahren optional ist. Diese Teile sind auch für Customer Self Repair ausgelegt. Wenn Sie jedoch den Austausch dieser Teile von Hewlett Packard Enterprise vornehmen lassen möchten, können bei diesem Service je nach den für Ihr Produkt vorgesehenen Garantiebedingungen zusätzliche Kosten anfallen.

HINWEIS: Einige Hewlett Packard Enterprise Teile sind nicht für Customer Self Repair ausgelegt. Um den Garantieanspruch des Kunden zu erfüllen, muss das Teil von einem Hewlett Packard Enterprise Servicepartner ersetzt werden. Im illustrierten Teilekatalog sind diese Teile mit „No“ bzw. „Nein“ gekennzeichnet.

CSR-Teile werden abhängig von der Verfügbarkeit und vom Lieferziel am folgenden Geschäftstag geliefert. Für bestimmte Standorte ist eine Lieferung am selben Tag oder innerhalb von vier Stunden gegen einen Aufpreis verfügbar. Wenn Sie Hilfe benötigen, können Sie das Hewlett Packard Enterprise Support Center anrufen und sich von einem Mitarbeiter per Telefon helfen lassen. Den Materialien von Hewlett Packard Enterprise, die mit einem CSR-Ersatzteil geliefert werden, können Sie entnehmen, ob das defekte Teil an

Hewlett Packard Enterprise zurückgeschickt werden muss. Wenn es erforderlich ist, das defekte Teil an Hewlett Packard Enterprise zurückzuschicken, müssen Sie dies innerhalb eines vorgegebenen Zeitraums tun, in der Regel innerhalb von fünf (5) Geschäftstagen. Das defekte Teil muss mit der zugehörigen Dokumentation in der Verpackung zurückgeschickt werden, die im Lieferumfang enthalten ist. Wenn Sie das defekte Teil nicht zurückschicken, kann Hewlett Packard Enterprise Ihnen das Ersatzteil in Rechnung stellen. Im Falle von Customer Self Repair kommt Hewlett Packard Enterprise für alle Kosten für die Lieferung und Rücksendung auf und bestimmt den Kurier-/Frachtdienst.

Weitere Informationen über das Hewlett Packard Enterprise Customer Self Repair Programm erhalten Sie von Ihrem Servicepartner vor Ort.

Parts-only Warranty Service (Garantieservice ausschließlich für Teile)

Ihre Hewlett Packard Enterprise Garantie umfasst möglicherweise einen Parts-only Warranty Service (Garantieservice ausschließlich für Teile). Gemäß den Bestimmungen des Parts-only Warranty Service stellt Hewlett Packard Enterprise Ersatzteile kostenlos zur Verfügung.

Für den Parts-only Warranty Service ist das CSR-Verfahren zwingend vorgegeben. Wenn Sie den Austausch dieser Teile von Hewlett Packard Enterprise vornehmen lassen, werden Ihnen die Anfahrt- und Arbeitskosten für diesen Service berechnet.

Reparaciones del propio cliente

Los productos de Hewlett Packard Enterprise incluyen muchos componentes que el propio usuario puede reemplazar (Customer Self Repair, CSR) para minimizar el tiempo de reparación y ofrecer una mayor flexibilidad a la hora de realizar sustituciones de componentes defectuosos. Si, durante la fase de diagnóstico, Hewlett Packard Enterprise (o los proveedores o socios de servicio de Hewlett Packard Enterprise) identifica que una reparación puede llevarse a cabo mediante el uso de un componente CSR, Hewlett Packard Enterprise le enviará dicho componente directamente para que realice su sustitución. Los componentes CSR se clasifican en dos categorías:

- **Obligatorio**—Componentes cuya reparación por parte del usuario es obligatoria. Si solicita a Hewlett Packard Enterprise que realice la sustitución de estos componentes, tendrá que hacerse cargo de los gastos de desplazamiento y de mano de obra de dicho servicio.
- **Opcional**—Componentes cuya reparación por parte del usuario es opcional. Estos componentes también están diseñados para que puedan ser reparados por el usuario. Sin embargo, si precisa que Hewlett Packard Enterprise realice su sustitución, puede o no conllevar costes adicionales, dependiendo del tipo de servicio de garantía correspondiente al producto.

NOTA: Algunos componentes de Hewlett Packard Enterprise no están diseñados para que puedan ser reparados por el usuario. Para que el usuario haga valer su garantía, Hewlett Packard Enterprise pone como condición que un proveedor de servicios autorizado realice la sustitución de estos componentes. Dichos componentes se identifican con la palabra "No" en el catálogo ilustrado de componentes.

Según la disponibilidad y la situación geográfica, los componentes CSR se enviarán para que lleguen a su destino al siguiente día laborable. Si la situación geográfica lo permite, se puede solicitar la entrega en el mismo día o en cuatro horas con un coste adicional. Si precisa asistencia técnica, puede llamar al Centro de asistencia técnica de Hewlett Packard Enterprise y recibirá ayuda telefónica por parte de un técnico. Con el envío de materiales para la sustitución de componentes CSR, Hewlett Packard Enterprise especificará si los componentes defectuosos deberán devolverse a Hewlett Packard Enterprise. En aquellos casos en los que sea necesario devolver algún componente a Hewlett Packard Enterprise, deberá hacerlo en el periodo de

tiempo especificado, normalmente cinco días laborables. Los componentes defectuosos deberán devolverse con toda la documentación relacionada y con el embalaje de envío. Si no enviara el componente defectuoso requerido, Hewlett Packard Enterprise podrá cobrarle por el de sustitución. En el caso de todas sustituciones que lleve a cabo el cliente, Hewlett Packard Enterprise se hará cargo de todos los gastos de envío y devolución de componentes y escogerá la empresa de transporte que se utilice para dicho servicio.

Para obtener más información acerca del programa de Reparaciones del propio cliente de Hewlett Packard Enterprise, póngase en contacto con su proveedor de servicios local.

Servicio de garantía exclusivo de componentes

La garantía limitada de Hewlett Packard Enterprise puede que incluya un servicio de garantía exclusivo de componentes. Según las condiciones de este servicio exclusivo de componentes, Hewlett Packard Enterprise le facilitará los componentes de repuesto sin cargo adicional alguno.

Para este servicio de garantía exclusivo de componentes, es obligatoria la sustitución de componentes por parte del usuario (CSR). Si solicita a Hewlett Packard Enterprise que realice la sustitución de estos componentes, tendrá que hacerse cargo de los gastos de desplazamiento y de mano de obra de dicho servicio.

Customer Self Repair

Veel onderdelen in Hewlett Packard Enterprise producten zijn door de klant zelf te repareren, waardoor de reparatieduur tot een minimum beperkt kan blijven en de flexibiliteit in het vervangen van defecte onderdelen groter is. Deze onderdelen worden CSR-onderdelen (Customer Self Repair) genoemd. Als Hewlett Packard Enterprise (of een Hewlett Packard Enterprise Service Partner) bij de diagnose vaststelt dat de reparatie kan worden uitgevoerd met een CSR-onderdeel, verzendt Hewlett Packard Enterprise dat onderdeel rechtstreeks naar u, zodat u het defecte onderdeel daarmee kunt vervangen. Er zijn twee categorieën CSR-onderdelen:

- **Verplicht**—Onderdelen waarvoor reparatie door de klant verplicht is. Als u Hewlett Packard Enterprise verzoekt deze onderdelen voor u te vervangen, worden u voor deze service reiskosten en arbeidsloon in rekening gebracht.
- **Optioneel**—Onderdelen waarvoor reparatie door de klant optioneel is. Ook deze onderdelen zijn ontworpen voor reparatie door de klant. Als u echter Hewlett Packard Enterprise verzoekt deze onderdelen voor u te vervangen, kunnen daarvoor extra kosten in rekening worden gebracht, afhankelijk van het type garantieservice voor het product.

OPMERKING: Sommige Hewlett Packard Enterprise onderdelen zijn niet ontwikkeld voor reparatie door de klant. In verband met de garantievoorwaarden moet het onderdeel door een geautoriseerde Service Partner worden vervangen. Deze onderdelen worden in de geïllustreerde onderdelencatalogus aangemerkt met "Nee".

Afhankelijk van de leverbaarheid en de locatie worden CSR-onderdelen verzonden voor levering op de eerstvolgende werkdag. Levering op dezelfde dag of binnen vier uur kan tegen meerkosten worden aangeboden, indien dit mogelijk is gezien de locatie. Indien assistentie is gewenst, belt u het Hewlett Packard Enterprise Support Center om via de telefoon ondersteuning van een technicus te ontvangen. Hewlett Packard Enterprise vermeldt in de documentatie bij het vervangende CSR-onderdeel of het defecte onderdeel aan Hewlett Packard Enterprise moet worden geretourneerd. Als het defecte onderdeel aan Hewlett Packard Enterprise moet worden teruggezonden, moet u het defecte onderdeel binnen een bepaalde periode, gewoonlijk vijf (5) werkdagen, retourneren aan Hewlett Packard Enterprise. Het

defecte onderdeel moet met de bijbehorende documentatie worden geretourneerd in het meegeleverde verpakkingsmateriaal. Als u het defecte onderdeel niet terugzendt, kan Hewlett Packard Enterprise u voor het vervangende onderdeel kosten in rekening brengen. Bij reparatie door de klant betaalt Hewlett Packard Enterprise alle verzendkosten voor het vervangende en geretourneerde onderdeel en kiest Hewlett Packard Enterprise zelf welke koerier/transportonderneming hiervoor wordt gebruikt.

Neem contact op met een Service Partner voor meer informatie over het Customer Self Repair programma van Hewlett Packard Enterprise.

Garantieservice "Parts Only"

Het is mogelijk dat de Hewlett Packard Enterprise garantie alleen de garantieservice "Parts Only" omvat. Volgens de bepalingen van de Parts Only garantieservice zal Hewlett Packard Enterprise kosteloos vervangende onderdelen ter beschikking stellen.

Voor de Parts Only garantieservice is vervanging door CSR-onderdelen verplicht. Als u Hewlett Packard Enterprise verzoekt deze onderdelen voor u te vervangen, worden u voor deze service reiskosten en arbeidsloon in rekening gebracht

Reparo feito pelo cliente

Os produtos da Hewlett Packard Enterprise são projetados com muitas peças para reparo feito pelo cliente (CSR) de modo a minimizar o tempo de reparo e permitir maior flexibilidade na substituição de peças com defeito. Se, durante o período de diagnóstico, a Hewlett Packard Enterprise (ou fornecedores/parceiros da Hewlett Packard Enterprise) concluir que o reparo pode ser efetuado pelo uso de uma peça CSR, a Hewlett Packard Enterprise enviará a peça diretamente ao cliente. Há duas categorias de peças CSR:

- **Obrigatória**—Peças cujo reparo feito pelo cliente é obrigatório. Se desejar que a Hewlett Packard Enterprise substitua essas peças, serão cobradas as despesas de transporte e mão-de-obra do serviço.
- **Opcional**—Peças cujo reparo feito pelo cliente é opcional. Essas peças também são projetadas para o reparo feito pelo cliente. No entanto, se desejar que a Hewlett Packard Enterprise as substitua, pode haver ou não a cobrança de taxa adicional, dependendo do tipo de serviço de garantia destinado ao produto.

OBSERVAÇÃO: Algumas peças da Hewlett Packard Enterprise não são projetadas para o reparo feito pelo cliente. A fim de cumprir a garantia do cliente, a Hewlett Packard Enterprise exige que um técnico autorizado substitua a peça. Essas peças estão identificadas com a marca "No" (Não), no catálogo de peças ilustrado.

Conforme a disponibilidade e o local geográfico, as peças CSR serão enviadas no primeiro dia útil após o pedido. Onde as condições geográficas permitirem, a entrega no mesmo dia ou em quatro horas pode ser feita mediante uma taxa adicional. Se precisar de auxílio, entre em contato com o Centro de suporte técnico da Hewlett Packard Enterprise para que um técnico o ajude por telefone. A Hewlett Packard Enterprise especifica nos materiais fornecidos com a peça CSR de reposição se a peça com defeito deve ser devolvida à Hewlett Packard Enterprise. Nos casos em que isso for necessário, é preciso enviar a peça com defeito à Hewlett Packard Enterprise, você deverá enviar a peça com defeito de volta para a Hewlett Packard Enterprise dentro do período de tempo definido, normalmente em 5 (cinco) dias úteis. A peça com defeito deve ser enviada com a documentação correspondente no material de transporte fornecido. Caso não o faça, a Hewlett Packard Enterprise poderá cobrar a reposição. Para as peças de reparo feito pelo cliente, a Hewlett Packard Enterprise paga todas as despesas de transporte e de devolução da peça e determina a transportadora/serviço postal a ser utilizado.

Para obter mais informações sobre o programa de reparo feito pelo cliente da Hewlett Packard Enterprise, entre em contato com o fornecedor de serviços local.

Serviço de garantia apenas para peças

A garantia limitada da Hewlett Packard Enterprise pode incluir um serviço de garantia apenas para peças. Segundo os termos do serviço de garantia apenas para peças, a Hewlett Packard Enterprise fornece as peças de reposição sem cobrar nenhuma taxa.

No caso desse serviço, a substituição de peças CSR é obrigatória. Se desejar que a Hewlett Packard Enterprise substitua essas peças, serão cobradas as despesas de transporte e mão-de-obra do serviço.

カスタマーセルフリペア

修理時間を短縮し、故障部品の交換における高い柔軟性を確保するために、Hewlett Packard Enterprise製品には多数のカスタマーセルフリペア（CSR）部品があります。診断の際に、CSR部品を使用すれば修理ができるとHewlett Packard Enterprise（Hewlett Packard EnterpriseまたはHewlett Packard Enterprise正規保守代理店）が判断した場合、Hewlett Packard Enterpriseはその部品を直接、お客様に発送し、お客様に交換していただきます。CSR部品には以下の2種類があります。

- **必須** - カスタマーセルフリペアが必須の部品。当該部品について、もしもお客様がHewlett Packard Enterpriseに交換作業を依頼される場合には、その修理サービスに関する交通費および人件費がお客様に請求されます。
- **任意** - カスタマーセルフリペアが任意である部品。この部品もカスタマーセルフリペア用です。当該部品について、もしもお客様がHewlett Packard Enterpriseに交換作業を依頼される場合には、お買い上げの製品に適用される保証サービス内容の範囲内においては、別途費用を負担していただくことなく保証サービスを受けることができます。

注：Hewlett Packard Enterprise製品の一部の部品は、カスタマーセルフリペアの対象外です。製品の保証を継続するためには、Hewlett Packard EnterpriseまたはHewlett Packard Enterprise正規保守代理店による交換作業が必須となります。部品カタログには、当該部品がカスタマーセルフリペア除外品である旨が記載されています。

部品供給が可能な場合、地域によっては、CSR部品を翌営業日に届くように発送します。また、地域によっては、追加費用を負担いただくことにより同日または4時間以内に届くように発送することも可能な場合があります。サポートが必要なときは、Hewlett Packard Enterpriseサポートセンターに電話していただければ、技術者が電話でアドバイスします。交換用のCSR部品または同梱物には、故障部品をHewlett Packard Enterpriseに返送する必要があるかどうかが表示されています。故障部品をHewlett Packard Enterpriseに返送する必要がある場合は、指定期限内（通常は5営業日以内）に故障部品をHewlett Packard Enterpriseに返送してください。故障部品を返送する場合は、届いた時の梱包箱に関連書類とともに入れてください。故障部品を返送しない場合、Hewlett Packard Enterpriseから部品費用が請求されます。カスタマーセルフリペアの際には、Hewlett Packard Enterpriseは送料および部品返送費を全額負担し、使用する宅配便会社や運送会社を指定します。

部品のみ保証サービス

Hewlett Packard Enterprise保証サービスには、部品のみ保証サービスが適用される場合があります。このサービスでは、交換部品は無償で提供されます。

部品のみ保証サービスにおいては、CSR部品をお客様により交換作業していただくことが必須になります。当該部品について、もしもお客様がHewlett Packard Enterpriseに交換作業を依頼される場合には、その修理サービスに関する交通費および人件費がお客様のご負担となります。

客户自行维修

Hewlett Packard Enterprise 产品提供许多客户自行维修 (CSR) 部件，以尽可能缩短维修时间和在更换缺陷部件方面提供更大的灵活性。如果在诊断期间 Hewlett Packard Enterprise（或Hewlett Packard Enterprise 服务提供商或服务合作伙伴）确定可以通过使用 CSR 部件完成维修，Hewlett Packard Enterprise 将直接把该部件发送给您进行更换。有两类 CSR 部件：

- **强制性的** — 要求客户必须自行维修的部件。如果您请求 Hewlett Packard Enterprise 更换这些部件，则必须为该服务支付差旅费和人工费用。
- **可选的** — 客户可以选择是否自行维修的部件。这些部件也是为客户自行维修设计的。不过，如果您要求 Hewlett Packard Enterprise 为您更换这些部件，则根据为您的产品指定的保修服务类型，Hewlett Packard Enterprise 可能收取或不再收取任何附加费用。

注：某些 Hewlett Packard Enterprise 部件的设计并未考虑客户自行维修。为了满足客户保修的需要，Hewlett Packard Enterprise 要求授权服务提供商更换相关部件。这些部件在部件图解目录中标记为“否”。

CSR 部件将在下一个工作日发运（取决于备货情况和允许的地理范围）。在允许的地理范围内，可在当天或四小时内发运，但要收取额外费用。如果需要帮助，您可以致电 Hewlett Packard Enterprise 技术支持中心，将会有技术人员通过电话为您提供帮助。Hewlett Packard Enterprise 会在随更换的 CSR 部件发运的材料中指明是否必须将有缺陷的部件返还给 Hewlett Packard Enterprise。如果要求您将有缺陷的部件返还给 Hewlett Packard Enterprise，那么您必须在规定的期限内（通常是五 (5) 个工作日）将缺陷部件发给 Hewlett Packard Enterprise。有缺陷的部件必须随所提供的发运材料中的相关文件一起返还。如果未能送还有缺陷的部件，Hewlett Packard Enterprise 可能会要求您支付更换费用。客户自行维修时，Hewlett Packard Enterprise 将承担所有相关运输和部件返回费用，并指定快递商/承运商。

有关 Hewlett Packard Enterprise 客户自行维修计划的详细信息，请与您当地的服务提供商联系。

仅部件保修服务

您的 Hewlett Packard Enterprise 有限保修服务可能涉及仅部件保修服务。根据仅部件保修服务条款的规定，Hewlett Packard Enterprise 将免费提供更换的部件。

仅部件保修服务要求进行 CSR 部件更换。如果您请求 Hewlett Packard Enterprise 更换这些部件，则必须为该服务支付差旅费和人工费用。

客戶自行維修

Hewlett Packard Enterprise 產品設計了許多「客戶自行維修」(CSR) 的零件以減少維修時間，並且使得更換瑕疵零件時能有更大的彈性。如果在診斷期間，Hewlett Packard Enterprise (或 Hewlett Packard Enterprise 服務供應商或維修夥伴) 辨認出此項維修工作可以藉由使用 CSR 零件來完成，則 Hewlett Packard Enterprise 將直接寄送該零件給您作更換。CSR 零件分為兩種類別：

- **強制的** — 客戶自行維修所使用的零件是強制性的。如果您要求 Hewlett Packard Enterprise 更換這些零件，Hewlett Packard Enterprise 將會向您收取此服務所需的外出費用與勞動成本。
- **選購的** — 客戶自行維修所使用的零件是選購的。這些零件也設計用於客戶自行維修之用。不過，如果您要求 Hewlett Packard Enterprise 為您更換，則可能需要也可能不需要負擔額外的費用，端視針對此產品指定的保固服務類型而定。

備註：某些 Hewlett Packard Enterprise 零件沒有消費者可自行維修的設計。為符合客戶保固，Hewlett Packard Enterprise 需要授權的服務供應商更換零件。這些零件在圖示的零件目錄中，被標示為「否」。

基於材料取得及環境允許的情況下，CSR 零件將於下一個工作日以快遞寄送。在環境的允許下當天或四小時內送達，則可能需要額外的費用。若您需要協助，可致電 Hewlett Packard Enterprise 支援中心，會有一位技術人員透過電話來協助您。不論損壞的零件是否必須退回，Hewlett Packard Enterprise 皆會在與 CSR 替換零件一起運送的材料中註明。若要將損壞的零件退回 Hewlett Packard Enterprise，您必須在指定的一段時間內 (通常為五 (5) 個工作天)，將損壞的零件寄回 Hewlett Packard Enterprise。損壞的零件必須與寄送資料中隨附的相關技術文件一併退還。如果無法退還損壞的零件，Hewlett Packard Enterprise 可能要向您收取替換費用。針對客戶自行維修情形，Hewlett Packard Enterprise 將負責所有運費及零件退還費用，並指定使用何家快遞/貨運公司。

如需 Hewlett Packard Enterprise 的 CSR 方案詳細資訊，請連絡您當地的服務供應商。

僅限零件的保固服務

您的「Hewlett Packard Enterprise 有限保固」可能包含僅限零件的保固服務。在僅限零件的保固服務情況下，Hewlett Packard Enterprise 將免費提供替換零件。

針對僅限零件的保固服務，CSR 零件替換是強制性的。如果您要求 Hewlett Packard Enterprise 更換這些零件，Hewlett Packard Enterprise 將會向您收取此服務所需的外出費用與勞動成本。

고객 셀프 수리

Hewlett Packard Enterprise 제품은 수리 시간을 최소화하고 결함이 있는 부품 교체 시 더욱 융통성을 발휘할 수 있도록 하기 위해 고객 셀프 수리(CSR) 부품을 다량 사용하여 설계되었습니다. 진단 기간 동안 Hewlett Packard Enterprise(또는 Hewlett Packard Enterprise 서비스 공급업체 또는 서비스 협력업체)에서 CSR 부품을 사용하여 수리가 가능하다고 판단되면 Hewlett Packard Enterprise는 해당 부품을 바로 사용자에게 보내어 사용자가 교체할 수 있도록 합니다. CSR 부품에는 두 가지 종류가 있습니다.

- **필수** - 고객 셀프 수리가 의무 사항인 필수 부품. 사용자가 Hewlett Packard Enterprise에 이 부품의 교체를 요청할 경우 이 서비스에 대한 출장비 및 작업비가 청구됩니다.
- **선택 사항** - 고객 셀프 수리가 선택 사항인 부품. 이 부품들도 고객 셀프 수리가 가능하도록 설계되었습니다. 하지만 사용자가 Hewlett Packard Enterprise에 이 부품의 교체를 요청할 경우 사용자가 구입한 제품에 해당하는 보증 서비스 유형에 따라 추가 비용 없이 교체가 가능할 수 있습니다.

참고: 일부 Hewlett Packard Enterprise 부품은 고객 셀프 수리가 불가능하도록 설계되었습니다. Hewlett Packard Enterprise는 만족스러운 고객 보증을 위해 공인 서비스 제공업체를 통해 부품을 교체하도록 하고 있습니다. 이러한 부품들은 Illustrated Parts Catalog에 "No"라고 표시되어 있습니다.

CSR 부품은 재고 상태와 지리적 조건이 허용하는 경우 다음 영업일 납품이 가능하도록 배송이 이루어집니다. 지리적 조건이 허용하는 경우 추가 비용이 청구되는 조건으로 당일 또는 4시간 배송이 가능할 수도 있습니다. 도움이 필요하시면 Hewlett Packard Enterprise Support Center로 전화하십시오. 전문 기술자가 전화로 도움을 줄 것입니다. Hewlett Packard Enterprise는 결함이 발생한 부품을 Hewlett Packard Enterprise로 반환해야 하는지 여부를 CSR 교체 부품과 함께 배송된 자료에 지정합니다. 결함이 발생한 부품을 Hewlett Packard Enterprise로 반환해야 하는 경우에는 지정된 기간 내(통상 영업일 기준 5일)에 Hewlett Packard Enterprise로 반환해야 합니다. 이때 결함이 발생한 부품은 제공된 포장 재료에 넣어 관련 설명서와 함께 반환해야 합니다. 결함이 발생한 부품을 반환하지 않는 경우 Hewlett Packard Enterprise가 교체 부품에 대해 비용을 청구할 수 있습니다. 고객 셀프 수리의 경우, Hewlett Packard Enterprise는 모든 운송 및 부품 반환 비용을 부담하며 이용할 운송업체 및 택배 서비스를 결정합니다.

Hewlett Packard Enterprise CSR 프로그램에 대한 자세한 내용은 가까운 서비스 제공업체에 문의하십시오.

부품 제공 보증 서비스

Hewlett Packard Enterprise 제한 보증에는 부품 제공 보증 서비스가 포함될 수 있습니다. 이러한 경우 Hewlett Packard Enterprise는 부품 제공 보증 서비스의 조건에 따라 교체 부품만을 무료로 제공합니다.

부품 제공 보증 서비스 제공 시 CSR 부품 교체는 의무 사항입니다. 사용자가 Hewlett Packard Enterprise에 이 부품의 교체를 요청할 경우 이 서비스에 대한 출장비 및 작업비가 청구됩니다.

Removal and replacement procedures

Subtopics

Required tools
Appliance module support and documentation
Safety considerations
Preparing the frame
Removing and replacing bezels
Removing and replacing a device bay blank
Removing and replacing a device bay shelf
Removing the half shelf

Replacing the half shelf
Removing and replacing an appliance bay blank
Removing and replacing a fan
Removing and replacing a frame lift handle
Removing and replacing a frame link module blank
Removing and replacing a frame link module
Removing and replacing a front panel assembly
Removing and replacing an interconnect module blank
Removing and replacing an interconnect module
Removing and replacing a power supply blank
Removing and replacing a power supply
Removing and replacing a dual slot power supply adapter
Removing and replacing a flex slot power supply
Removing and replacing a –48V DC power supply
Removing and replacing a rear cage
Removing and replacing the rack rails

Required tools

The following items are required for some procedures:

- T-10 Torx screwdriver
- T-15 Torx screwdriver
- T-25 Torx screwdriver

Appliance module support and documentation

The appliance module removal and replacement procedures are available in the HPE Synergy Appliance Maintenance and Service Guide on the **Hewlett Packard Enterprise website**.

Safety considerations

Before performing service procedures, review all the safety information.

Subtopics

Electrostatic discharge

Be aware of the precautions you must follow when setting up the system or handling components. A discharge of static electricity from a finger or other conductor may damage system boards or other static-sensitive devices. This type of damage may reduce the life expectancy of the system or component.

To prevent electrostatic damage:

- Avoid hand contact by transporting and storing products in static-safe containers.
- Keep electrostatic-sensitive parts in their containers until they arrive at static-free workstations.
- Place parts on a grounded surface before removing them from their containers.
- Avoid touching pins, leads, or circuitry.
- Always be properly grounded when touching a static-sensitive component or assembly. Use one or more of the following methods when handling or installing electrostatic-sensitive parts:
  - Use a wrist strap connected by a ground cord to a grounded workstation or computer chassis. Wrist straps are flexible straps with a minimum of 1 megohm ±10 percent resistance in the ground cords. To provide proper ground, wear the strap snug against the skin.
  - Use heel straps, toe straps, or boot straps at standing workstations. Wear the straps on both feet when standing on conductive floors or dissipating floor mats.
  - Use conductive field service tools.
  - Use a portable field service kit with a folding static-dissipating work mat.

  If you do not have any of the suggested equipment for proper grounding, have an authorized reseller install the part.

For more information on static electricity or assistance with product installation, contact an authorized reseller.

Warnings, cautions, and important messages

WARNING

To reduce the risk of personal injury or damage to equipment, heed all warnings and cautions throughout the installation instructions.

WARNING

The frame is very heavy. To reduce the risk of personal injury or damage to the equipment:

- Observe local occupational health and safety requirements and guidelines for manual material handling.
- Remove all installed frame components from their frames before installing or moving the frames.
- Use caution and get help to lift and stabilize frames during installation or removal, especially when the frame is not fastened to the rack.

WARNING

Be sure to install frames starting from the bottom of the rack and work your way up the rack.



These symbols, on power supplies or systems, indicate that the equipment is supplied by multiple sources of power.

WARNING

To reduce the risk of injury from electric shock, remove all power cords to completely disconnect power from the system.

- Each enclosure has two or more power supply cords. A single rack or cabinet may contain more than one enclosure. Power may be supplied in a redundant fashion. Removing any single source of power does not necessarily remove power from any portion of the system. When performing any service other than hot-plug module replacement, you must completely disconnect all power to that portion of the system.
- When performing service procedures on enclosures, shut off the circuit breakers to both A and B AC power feeds and the

n disconnect all power cords from the outlets before servicin g.

WARNING

To reduce the risk of personal injury from hot surfaces, allow the drives and the internal system components to cool before touching them.

CAUTION

Always be sure that equipment is properly grounded and that you follow proper grounding procedures before beginning any installation procedure. Improper grounding can result in ESD damage to electronic components. For more information, see Electrostatic discharge.

CAUTION

When performing non-hot-plug operations, you must power down the compute module, the system, or both. Use caution when performing other operations, such as hot-plug installations or troubleshooting.

CAUTION

Protect the equipment from power fluctuations and temporary interruptions with a regulating facility UPS device. This device protects the hardware from damage caused by power surges and voltage spikes and keeps the system in operation during a power failure.

Preparing the frame

About this task

The following actions might be required for some replacement procedures:

- Power down all compute modules.
- Power down all storage modules.
- Power down the appliance modules.
- Power down the frame.

Subtopics

Locating the frame in the rack
Powering down the compute module
Powering down the storage module
Powering down the appliance module
Powering down the frame
HPE Synergy Console connections

Locating the frame in the rack

About this task

Before you power down a frame or service components in a frame, you want to make sure that you identify the correct frame in the data center.

Procedure

1. Connect to the HPE Synergy Console.
2. Sign in to HPE OneView with administrator privileges.

   Minimum required privileges for the next step: Infrastructure administrator, Server administrator (for enclosure, server, and frame link module UID lights), Network administrator (for interconnect UID LED).
3. Navigate to the **Enclosures** screen and use the UID LED to locate the frame being serviced.

Powering down the compute module

About this task

Before powering down the compute module for any upgrade or maintenance procedures, perform a backup of the system and all data. Then, shut down, as appropriate, applications and operating systems. A successful shutdown is indicated by the system power LED displaying amber.

> **IMPORTANT**
> Always attempt a controlled shutdown before forcing a shutdown. Application data can be lost when forcing a shutdown of applications and the OS.

Before proceeding, verify the following:

- The compute module is in standby mode by observing that the system power LED is amber.
- The UID LED is not flashing blue.

> **NOTE**
>
> - When the compute module is in standby mode, auxiliary power is still being provided to the system.
> - If the UID LED is flashing blue, a remote session, or a firmware update is in progress.

To power down the compute module, use one of the following methods:

- To perform a controlled shutdown of applications and the OS before the compute module enters standby mode, do one of the following:
  - Press and release the **Power On/Standby** button.
  - Select the **Momentary press** power off selection in HPE OneView.
  - Select the **Momentary press** virtual power button selection in HPE iLO.
- To force the compute module to enter standby mode, do one of the following:
  - Press and hold the **Power On/Standby** button for more than four seconds.
  - Select the **Press and hold** power off selection in HPE OneView.
  - Select the **Press and hold** virtual power button selection in HPE iLO.

  These methods force the compute module to enter standby mode without properly exiting applications and the OS. If an application stops responding, use this method to force a shutdown.

Powering down the storage module

About this task

Procedure

1. Power down all associated compute modules.
2. Review the storage module drawer power LED. When the drawer power LED is off, the storage module is not in use.

For more information about storage module LEDs, see the HPE Synergy 12Gb SAS Storage User Guide on the Hewlett Packard Enterprise website (**http://www.hpe.com/info/synergy-docs**).

3. To remove all power from the storage module, do one of the following:

   a. Power down the frame and remove the power cords from all power supplies.

   b. Remove the storage module from the frame.

Powering down the appliance module

About this task

Powering down the appliance module from the user interface enables you to log out users and cancel ongoing tasks.

Use one of the following steps:

- For HPE Synergy Composer:
  1. From the main menu, select **Settings > Appliance**.
  2. Select **Actions > Shut down**.

  This will power down both appliances in a high-availability cluster. To power down just one of the appliance modules, or if the appliance module is in a standalone configuration, select the **Shutdown** option from the appliance maintenance console of the appliance module to be serviced.

- For HPE Synergy Image Streamer, from the main menu of the Image Streamer interface, select **Deployment Appliances > Actions > Shutdown**. This will power down both appliance modules in a high-availability cluster. To power down just one of the appliance modules, or if the appliance module is in a standalone configuration, select the **Shutdown** option from the appliance maintenance console of the appliance module to be serviced.



NOTE

If your configuration includes both HPE Synergy Composer and HPE Synergy Image Streamer, you must perform the shutdown action twice, one each for HPE Synergy Composer and HPE Synergy Image Streamer.

Powering down the frame

Procedure

1. If the frame to be powered down is part of a multiframe management ring with Image Streamer, see Powering down an HPE Synergy frame that is part of a multiframe management ring with Image Streamer.
2. Locate the frame to be powered down.
3. Verify that the compute module UID LED is not flashing blue and that the compute module is in standby mode.

   For more information, see the compute module user guide on the Hewlett Packard Enterprise website (**http://www.hpe.com/info/synergy-docs**).
4. Power down all compute modules.
5. Power down all appliance modules.
6. Verify that all LEDs indicate that all devices are powered off.
7. Disconnect all power cables from the power supplies in the frame.

Subtopics

Powering down an HPE Synergy frame that is part of a multiframe management ring with Image Streamer

Powering down an HPE Synergy frame that is part of a multiframe management ring with Image Streamer

About this task

To power down an HPE Synergy frame that is part of a multiframe management ring that includes Image Streamer, use the steps in this topic to ensure that the appliance modules are powered down in the correct order.

IMPORTANT

Powering the frame down causes the management ring to be degraded. Although management connectivity is not lost, the management ring is no longer highly available. If the power down of the frame is only temporary, and it is acceptable for the management ring to be in a degraded but operational state for a short time, no further action is required. However, if the frame is expected to be powered down for an extended time, Hewlett Packard Enterprise recommends that the CAT6A cabling be moved to bypass the powered down frame and restore the high availability of the ring.

Procedure

1. Power down all compute modules in the frame.
2. Confirm that the HPE Synergy D3940 Storage Module power LED is off.

   Power is automatically removed when the compute module is powered down.
3. Shut down the Image Streamer.
4. If it is installed in the frame, shut down the Composer.
5. Wait for several minutes for the appliance module to shut down properly.
6. Remove the frame power cables.

HPE Synergy Console connections

Subtopics

Connecting to the HPE Synergy Console using a laptop computer
Connecting to the HPE Synergy Console using a keyboard, video monitor, and mouse

Connecting to the HPE Synergy Console using a laptop computer

Prerequisites

At least one frame link module is installed in one of the frame link module bays.

About this task

WARNING

Do not plug the front panel laptop port into a switch. The front panel laptop port is designed to provide a single laptop access to the HPE Synergy Console. Plugging the laptop port into a switch may cause issues on a network where DHCP is running.

Procedure

1. Ensure that the Ethernet port of the laptop computer is configured for DHCP.

   Alternatively, you can configure the laptop computer Ethernet port to the IP address: 192.168.10.2 with the subnet mask 255.255.255.0.

2. Use a CAT5 cable to connect the laptop computer Ethernet port to the laptop port on a front panel module.

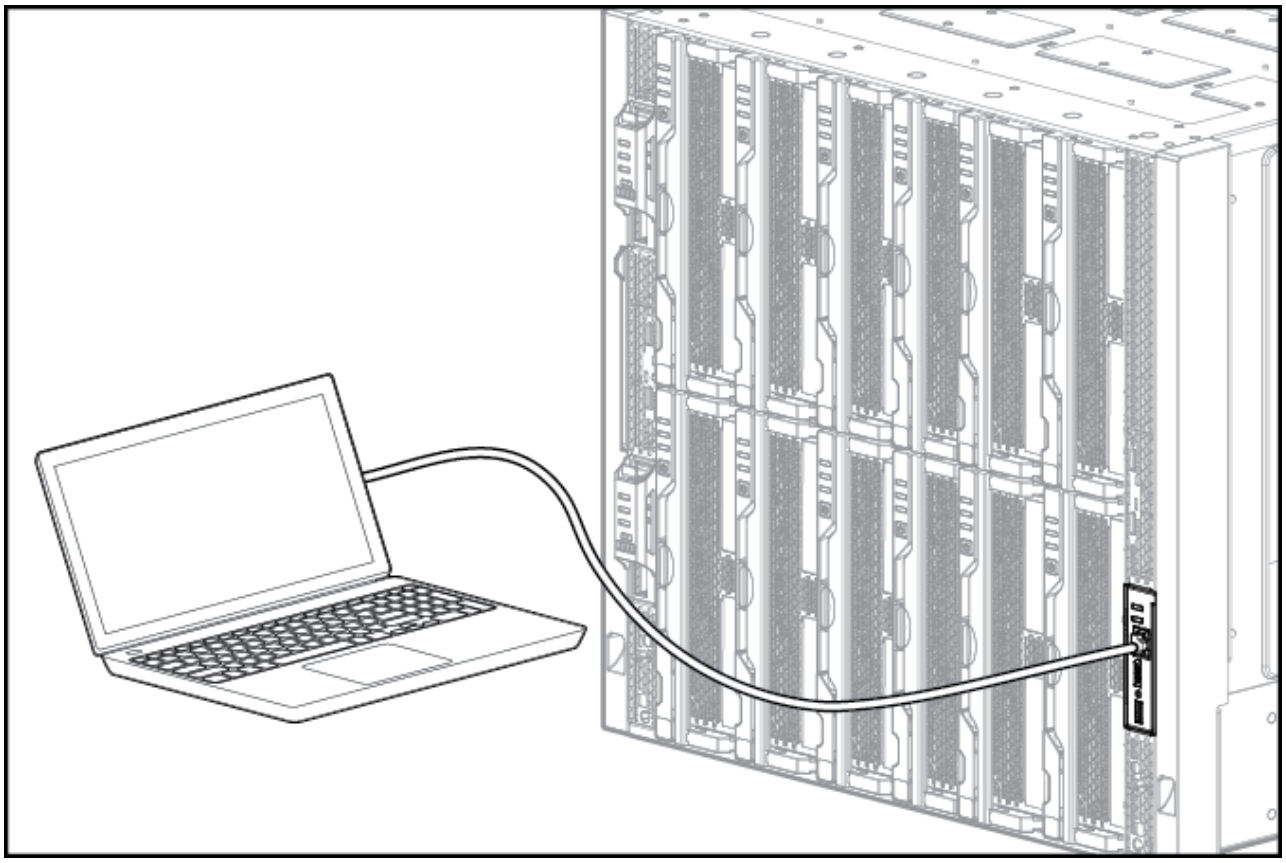

3. Wait for the laptop computer to be assigned an IP address from the frame link module.
4. Access the HPE Synergy Console using either a VNC client or web browser:
   - **Web browser:** Open a web browser and enter `http://192.168.10.1`.

     Alternatively, you can include the legacy port number.

     `http://192.168.10.1:5800`
   - **VNC client:** Open a VNC client and connect to `192.168.10.1` port `5900`.

     A VNC client will load to the web browser and open the HPE Synergy Console.

Connecting to the HPE Synergy Console using a keyboard, video monitor, and mouse

Prerequisites

A frame link module is installed in a frame link module bay.

About this task

> **NOTE**
> This procedure describes connecting a keyboard and mouse to a monitor with an integrated USB hub. Alternatively, you can use a standalone USB hub to connect a keyboard and mouse.

> **NOTE**
> Cabling to an HPE Synergy 4-Port Frame Link Modules requires an HPE Synergy 4-Port Frame Link Module USB Adapter

Procedure

1. Connect a monitor cable to the monitor port and connect a USB cable to the USB port on either:
   - The front panel module on the front of the frame.

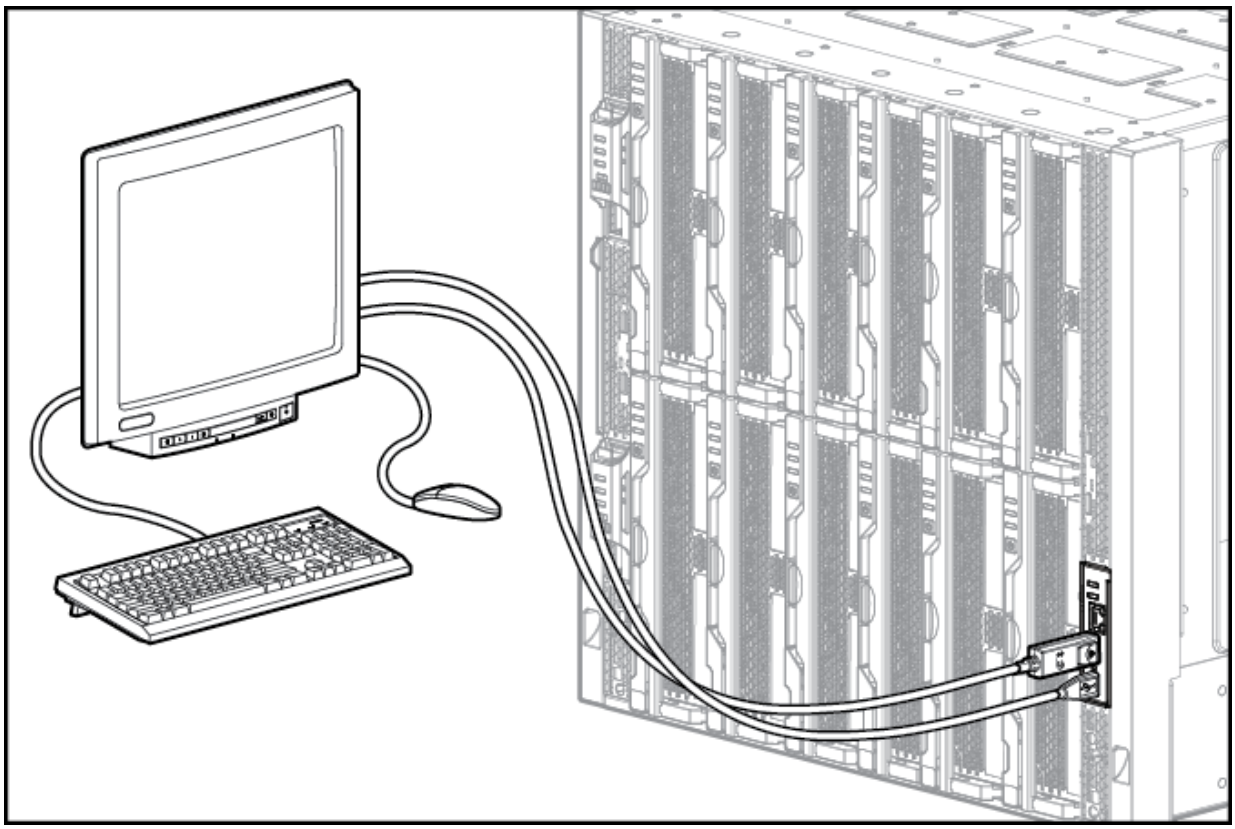

- Either frame link module on the rear of the frame.

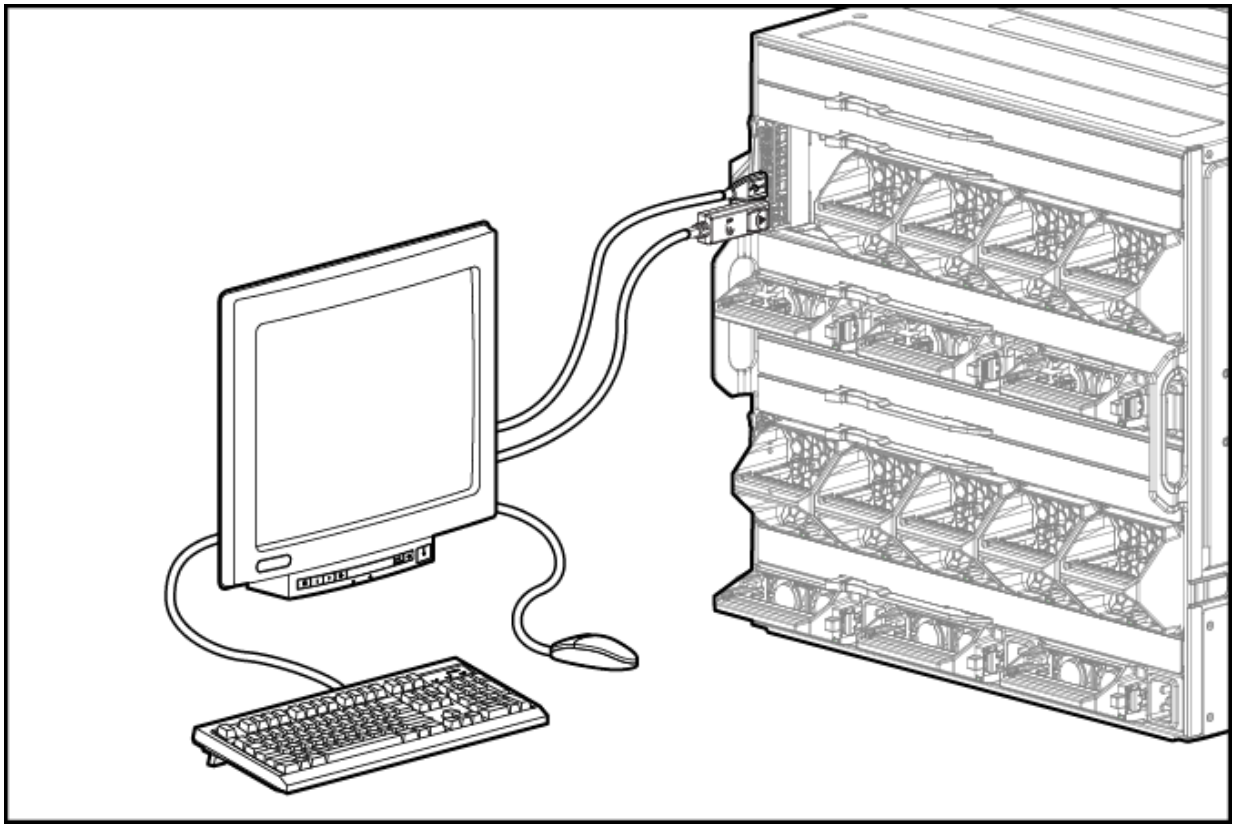

- An HPE Synergy 4-Port Frame Link Module USB Adapter connected to an HPE Synergy 4-Port Frame Link module.

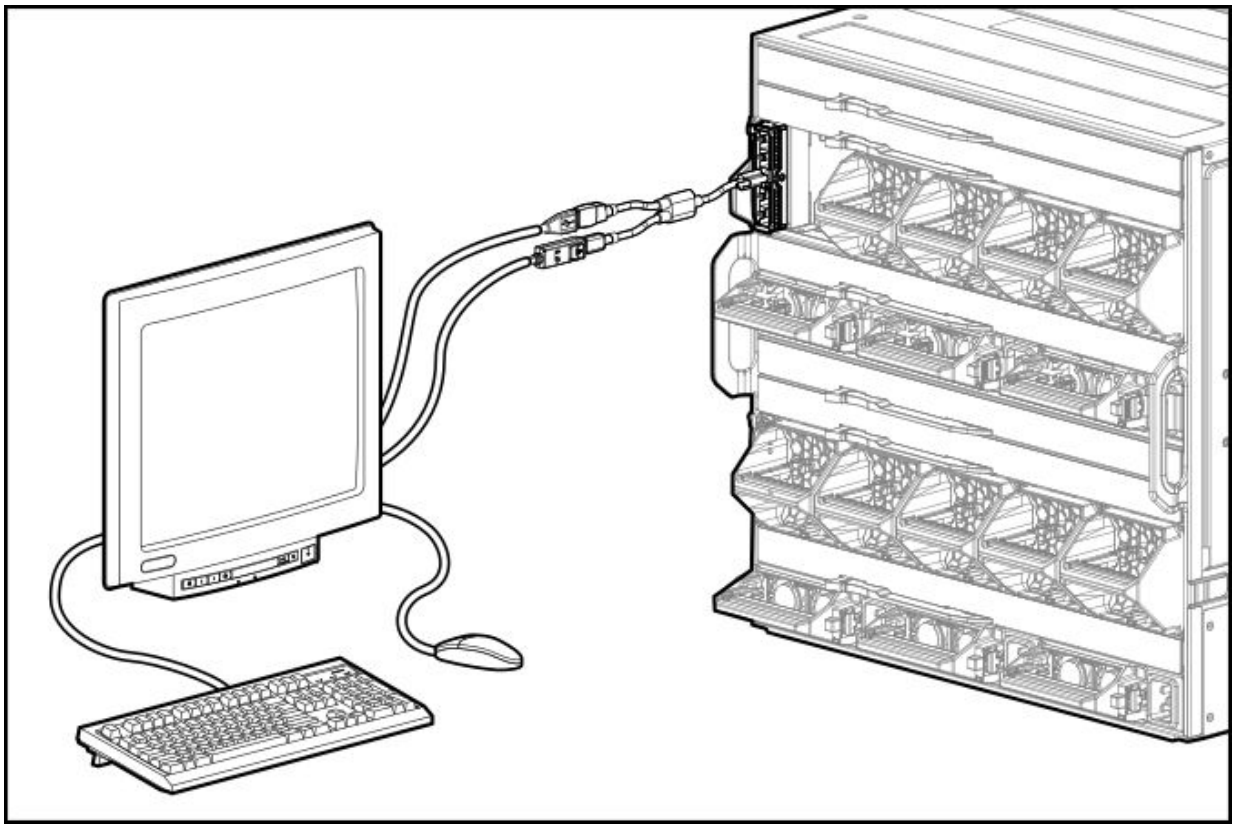

2. Connect a monitor to the frame with the monitor cable.
3. Connect a USB keyboard and mouse to the USB ports on the monitor, and connect the monitor USB to the frame with the USB cable.

   Alternatively, connect the USB keyboard and mouse to a USB hub connected to the frame.

Removing and replacing bezels

Procedure

1. Using the finger slot at the bottom of the frame bezel, pull the bottom of the bezel out, and then up.
2. Pull the top of the bezel away from the frame, and then remove the bezel from the frame.

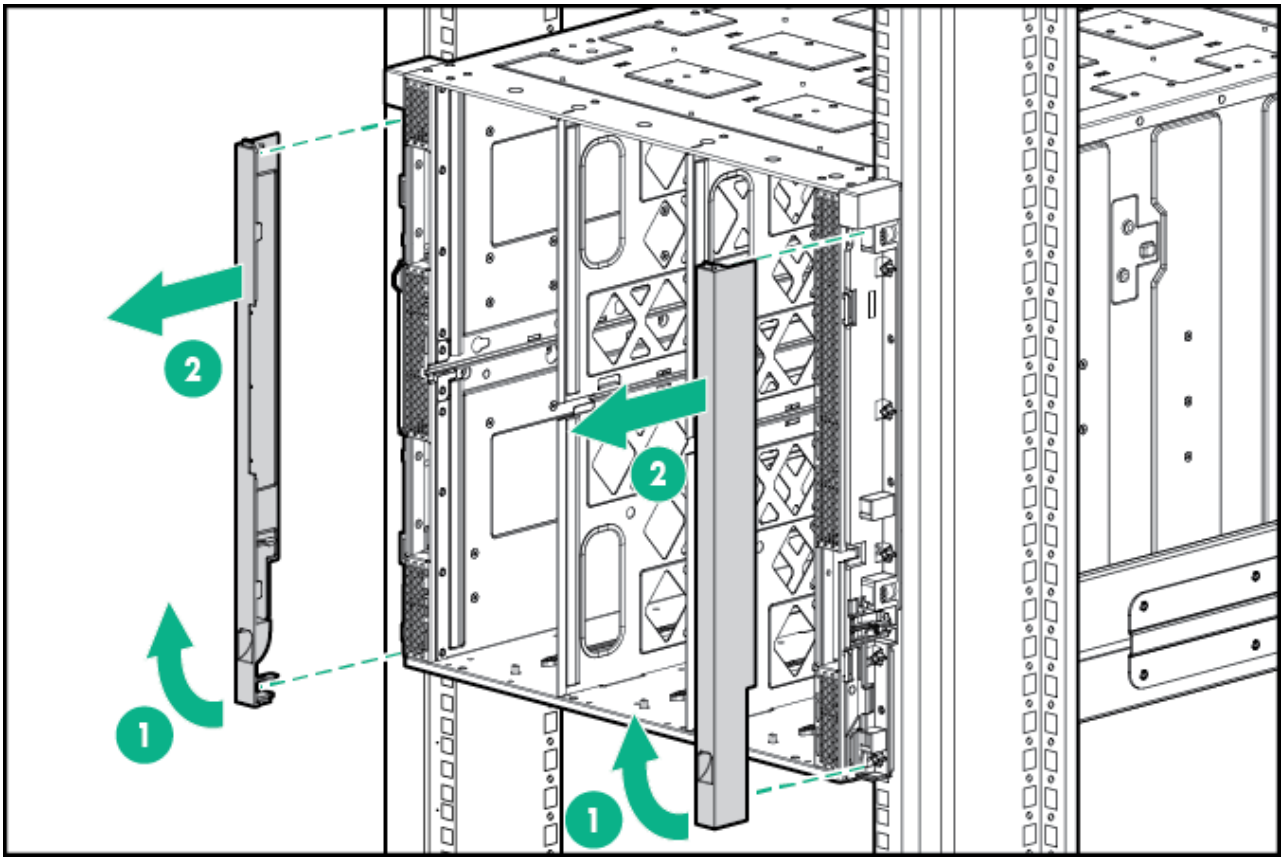

Results

To replace the component, reverse the removal procedure.

Removing and replacing a device bay blank

About this task

Install device bay blanks in any unused device bays.

To remove the component, use the pull slots to remove the device bay blank.

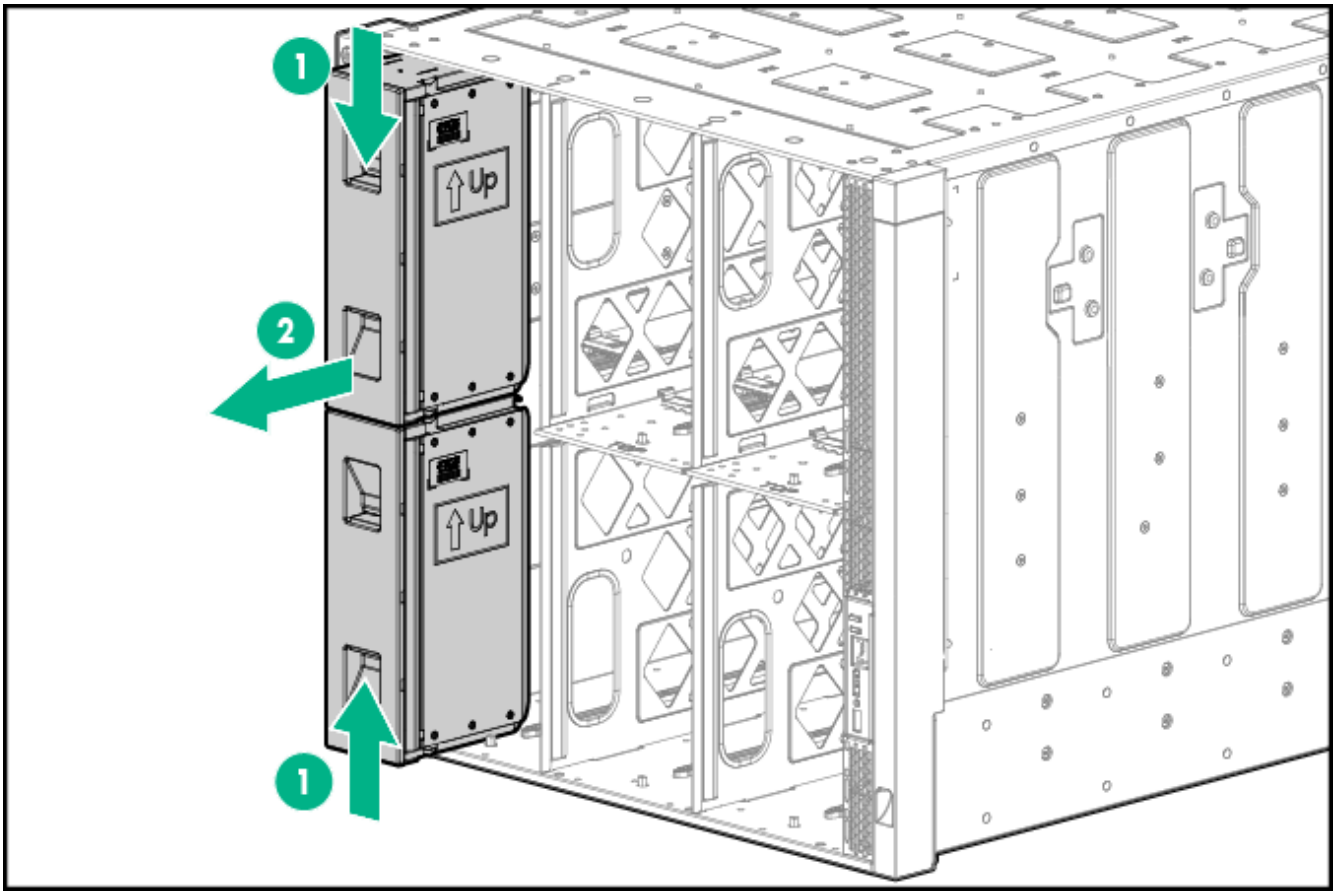

To replace the component, reverse the removal procedure.

If replacing a full-height device bay blank, ensure that the coupler is installed:

Procedure

1. Fit the coupler plate into the slots on top of the blank, and then slide the coupler plate back until it snaps into place.

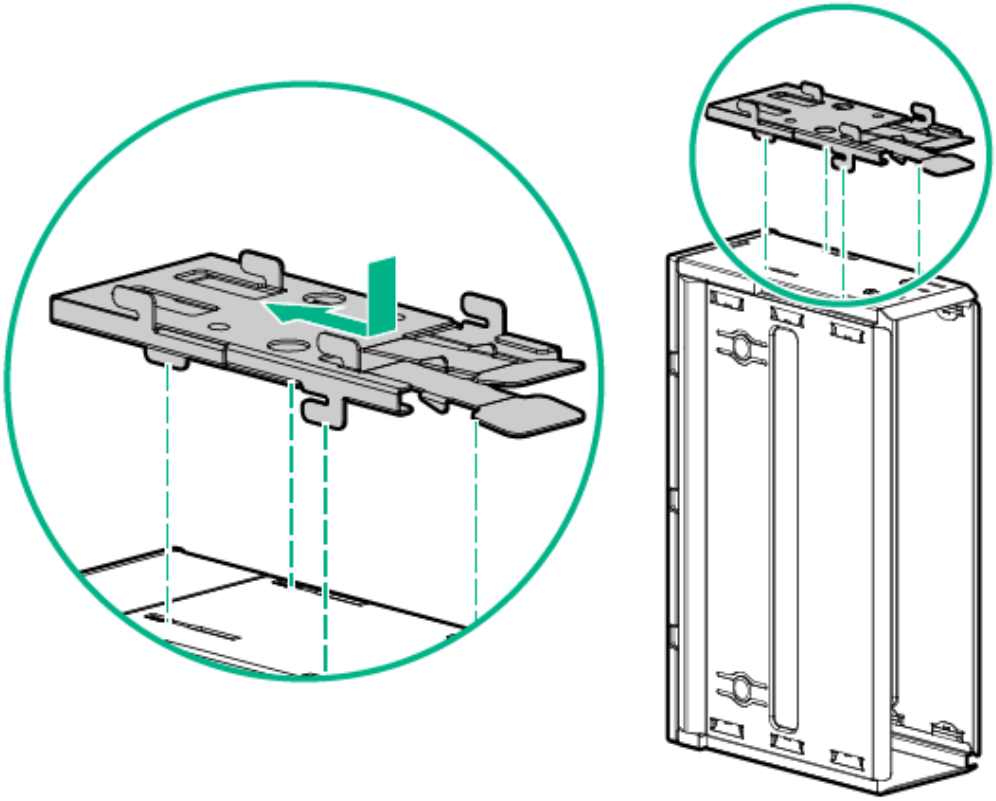

2. Fit the slots on the bottom of the second blank on to the coupler plate tabs. Then, slide the second blank forward until it snaps in place.

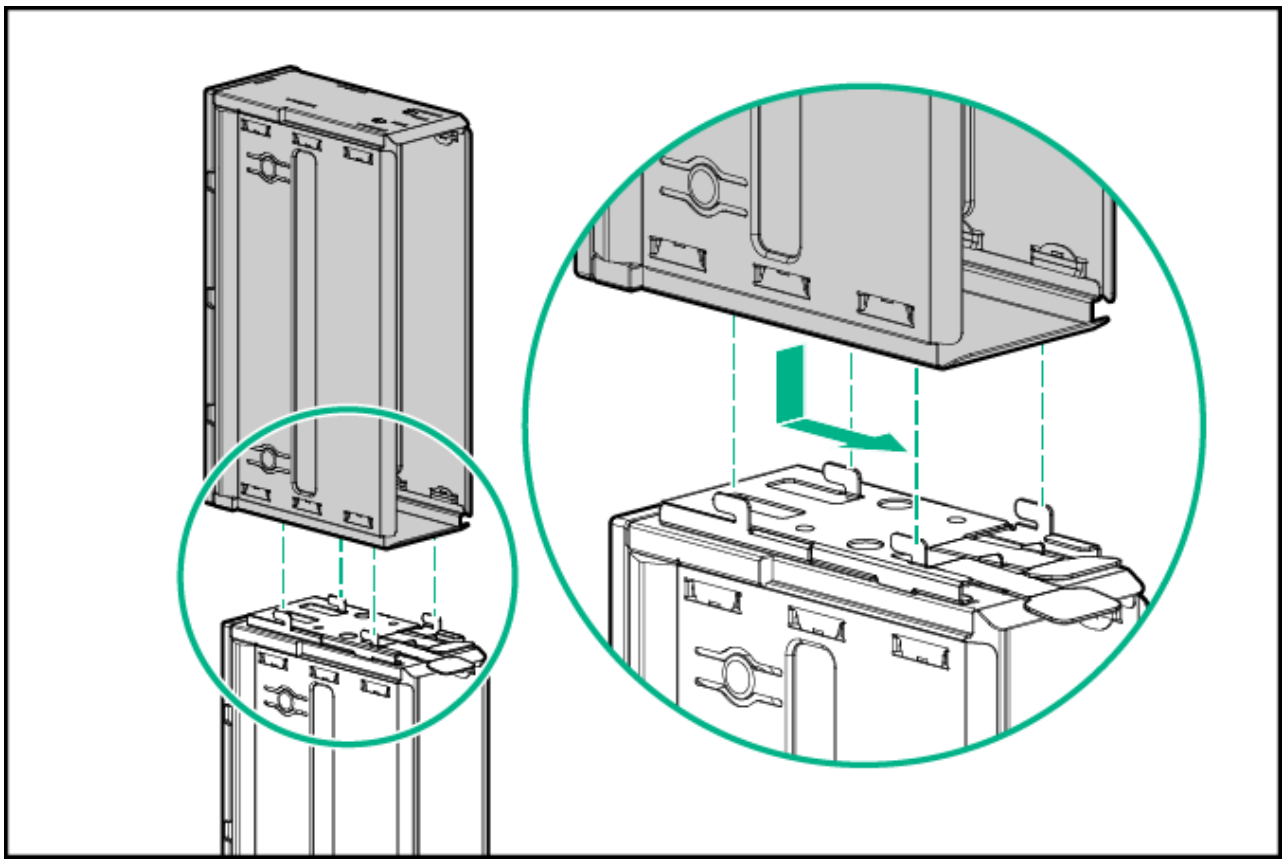

3. Install the full-height blank into the device bay.

Removing and replacing a device bay shelf

Prerequisites

Remove all compute modules in the associated device bays before removing and replacing the device bay shelf.

Procedure

1. Press and hold the release latches to release the locking mechanism.
2. Slide the removable shelf out of the frame.

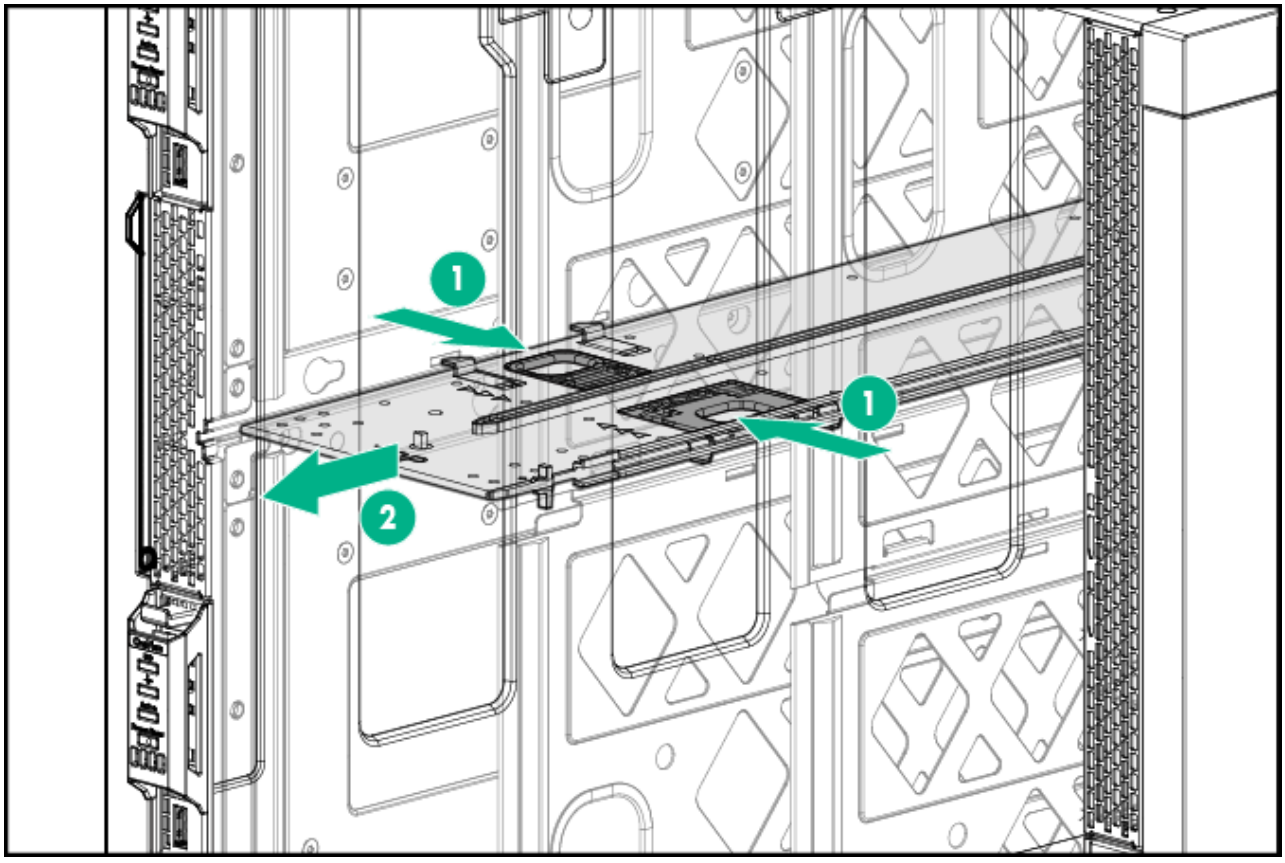

Results

To replace the component, reverse the removal procedure.

Removing the half shelf

Prerequisites

If installed, remove the full-height compute module from the adjacent bay before removing and replacing the half shelf.

Procedure

1. To release the locking mechanism, press and hold the shelf release latch.
2. Slide the half shelf towards the front of the frame, and then pull away from the frame.

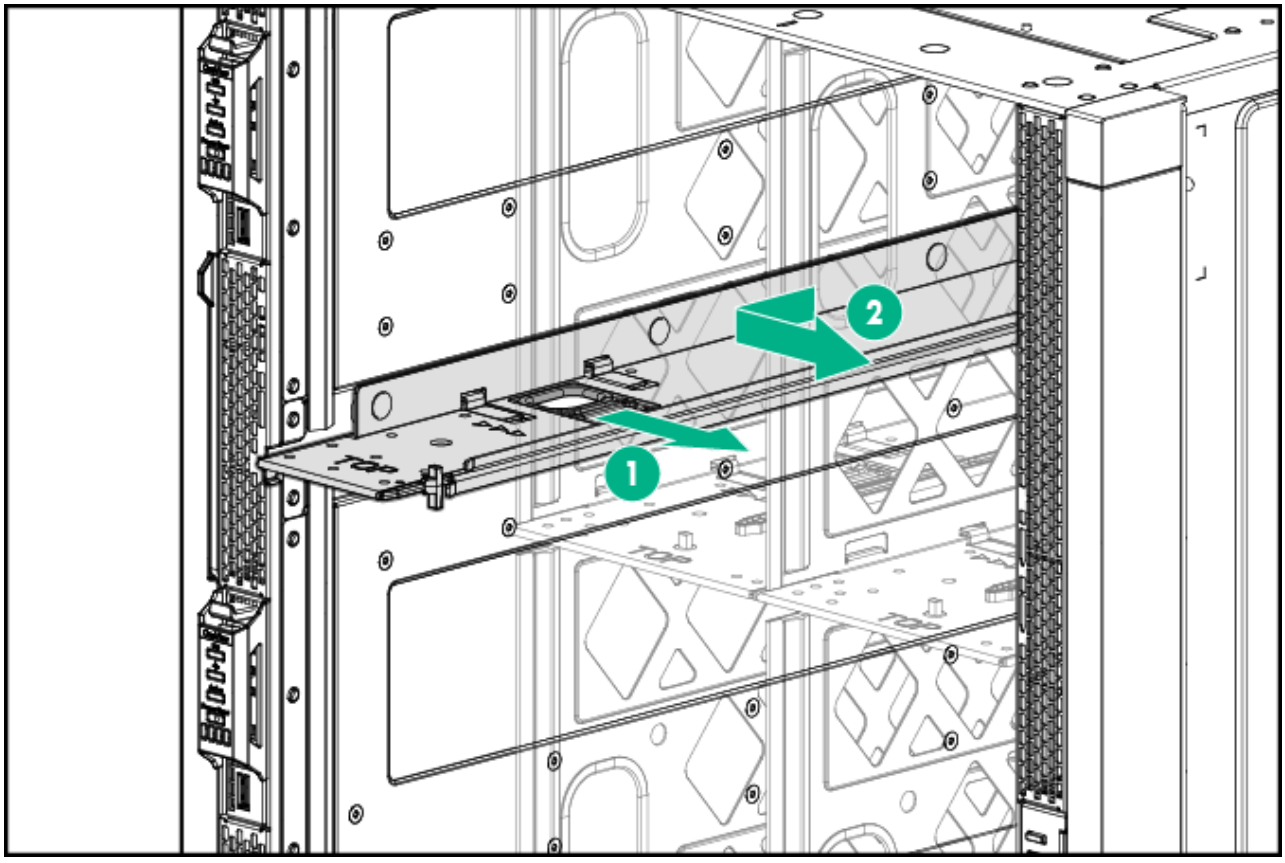

Subtopics

Replacing the half shelf

Replacing the half shelf

Procedure

1. Align the spools to the keyhole slots in the frame.

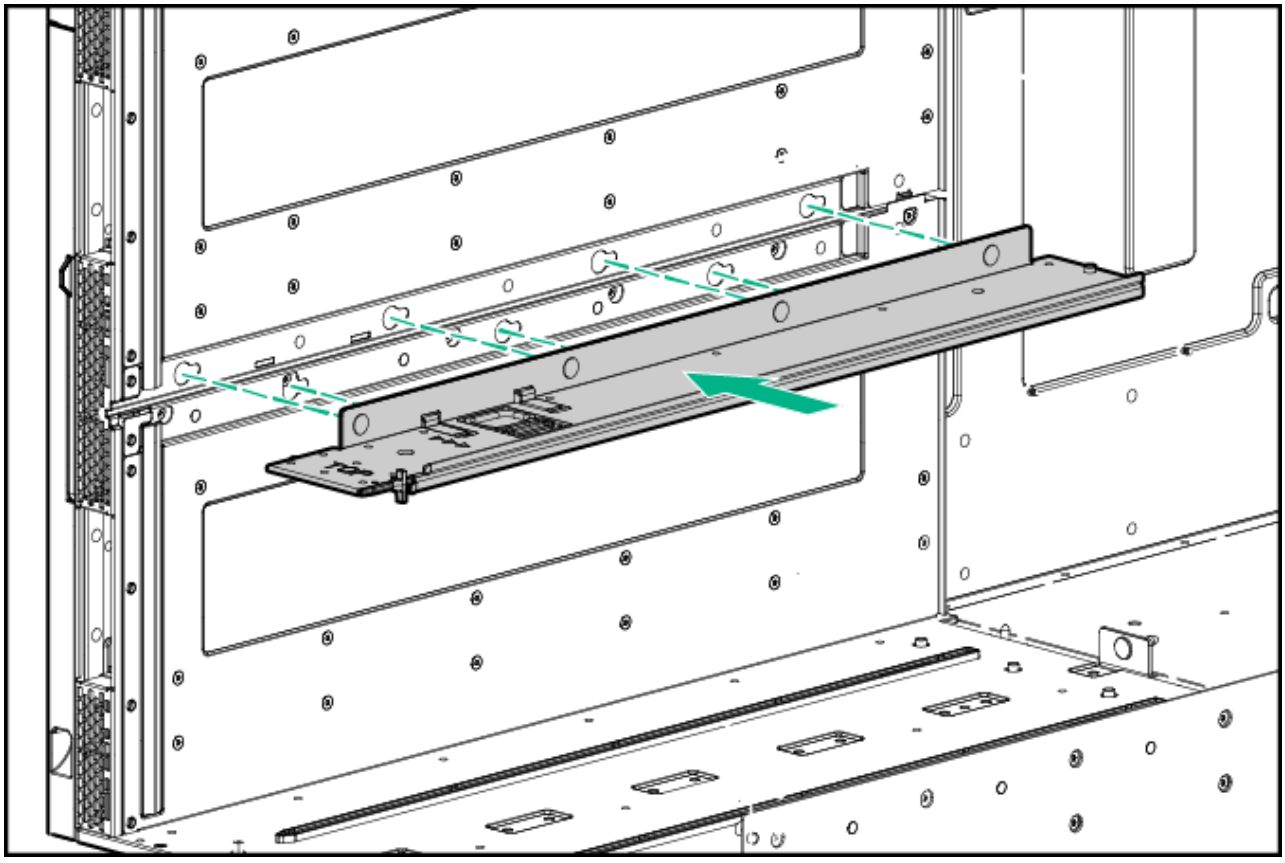

2. Insert the spools into the keyhole slots and slide the half shelf towards the rear of the frame until it locks into place.

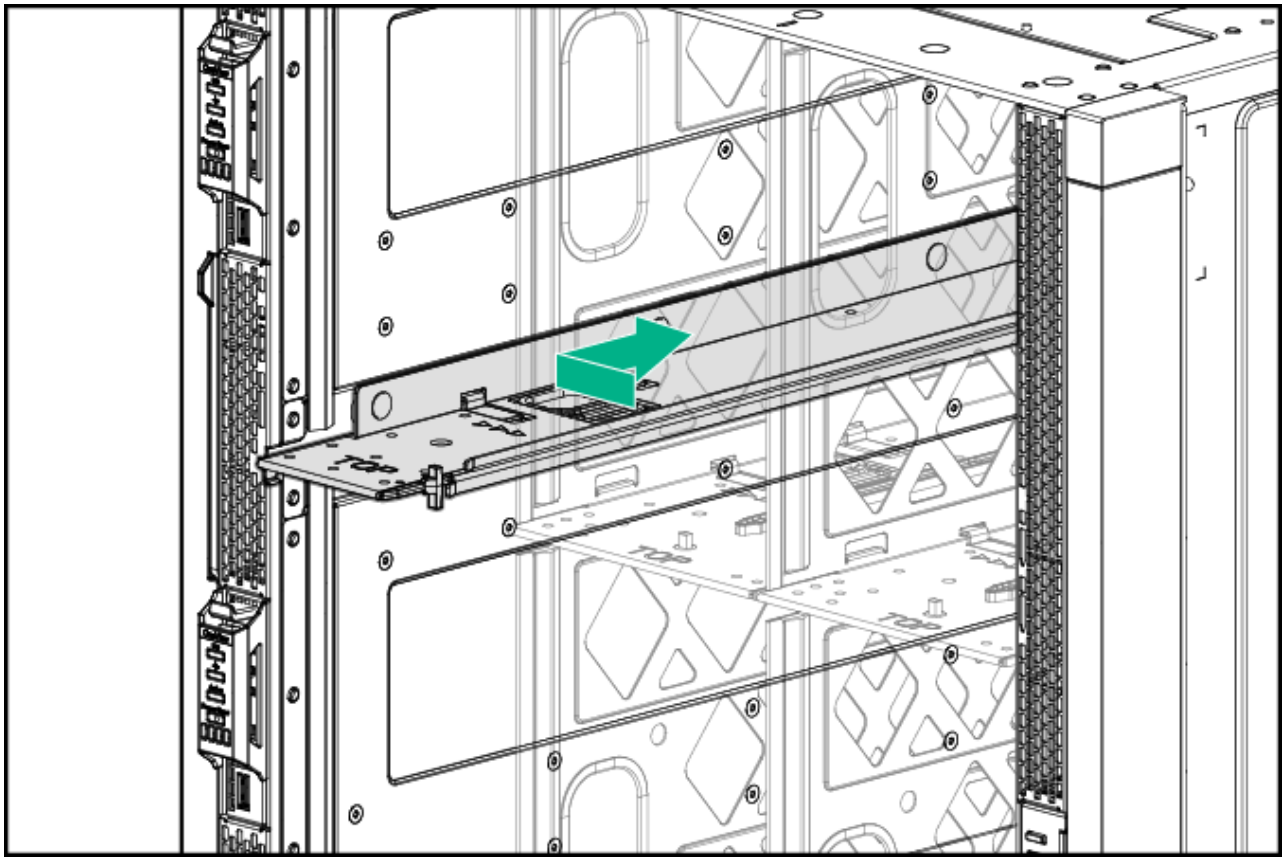

Replacing the half shelf

Procedure

1. Align the spools to the keyhole slots in the frame.

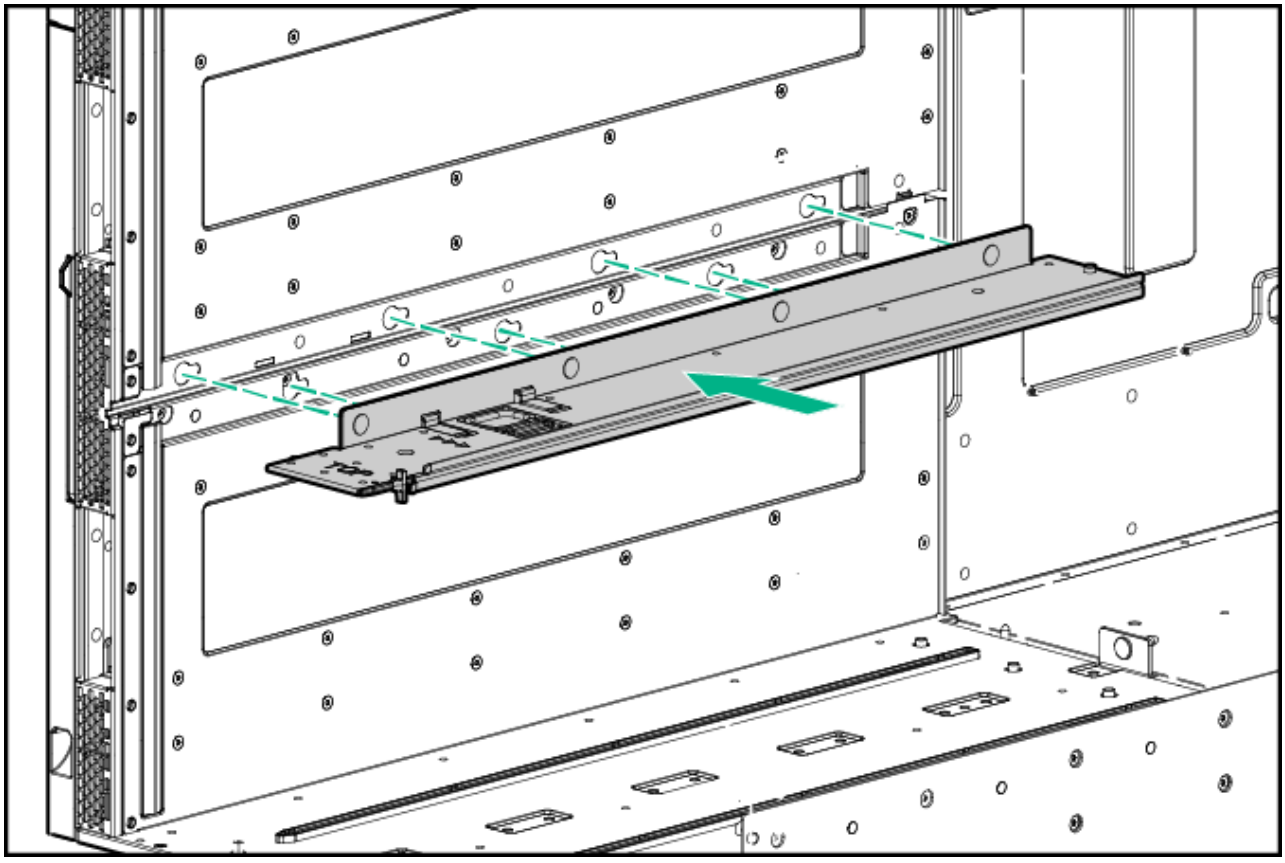

2. Insert the spools into the keyhole slots and slide the half shelf towards the rear of the frame until it locks into place.

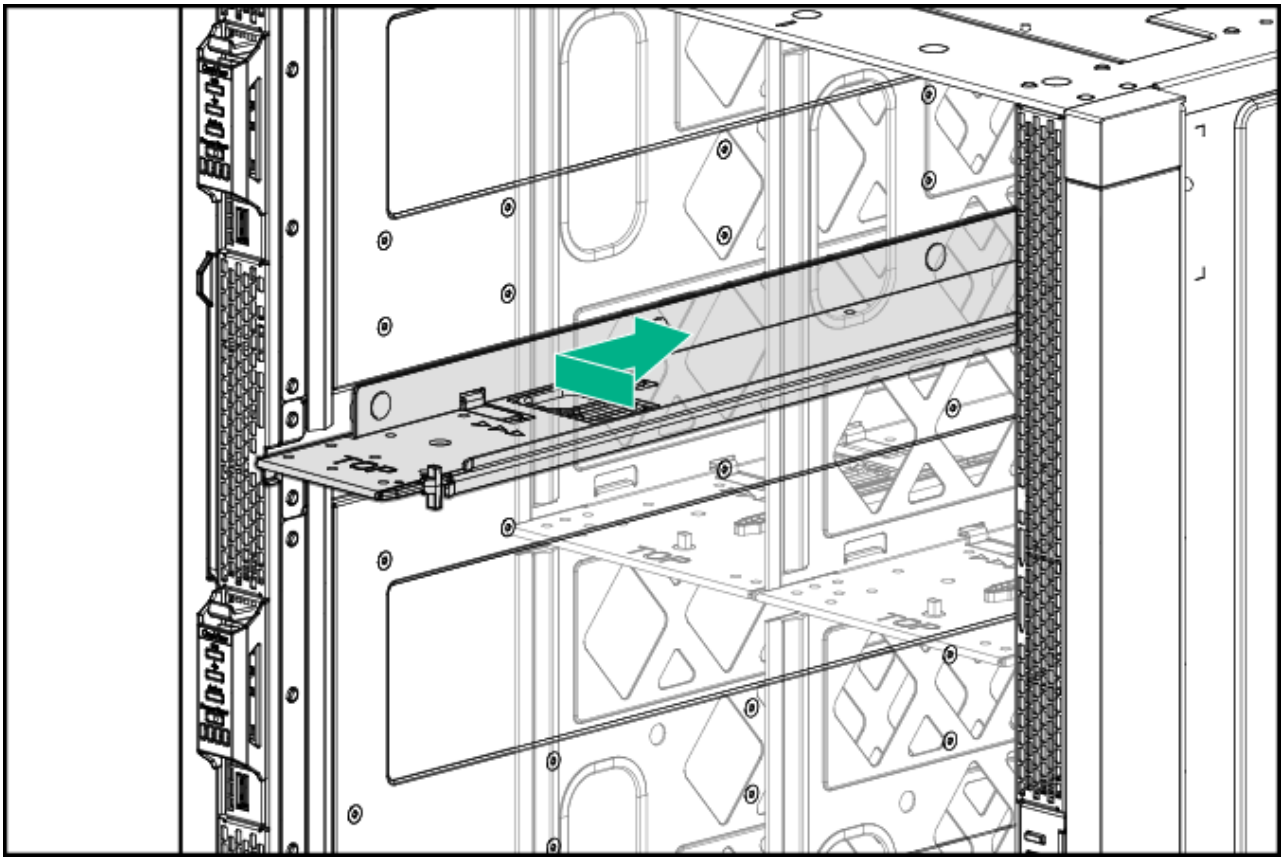

Removing and replacing an appliance bay blank

About this task

Remove the component as indicated.

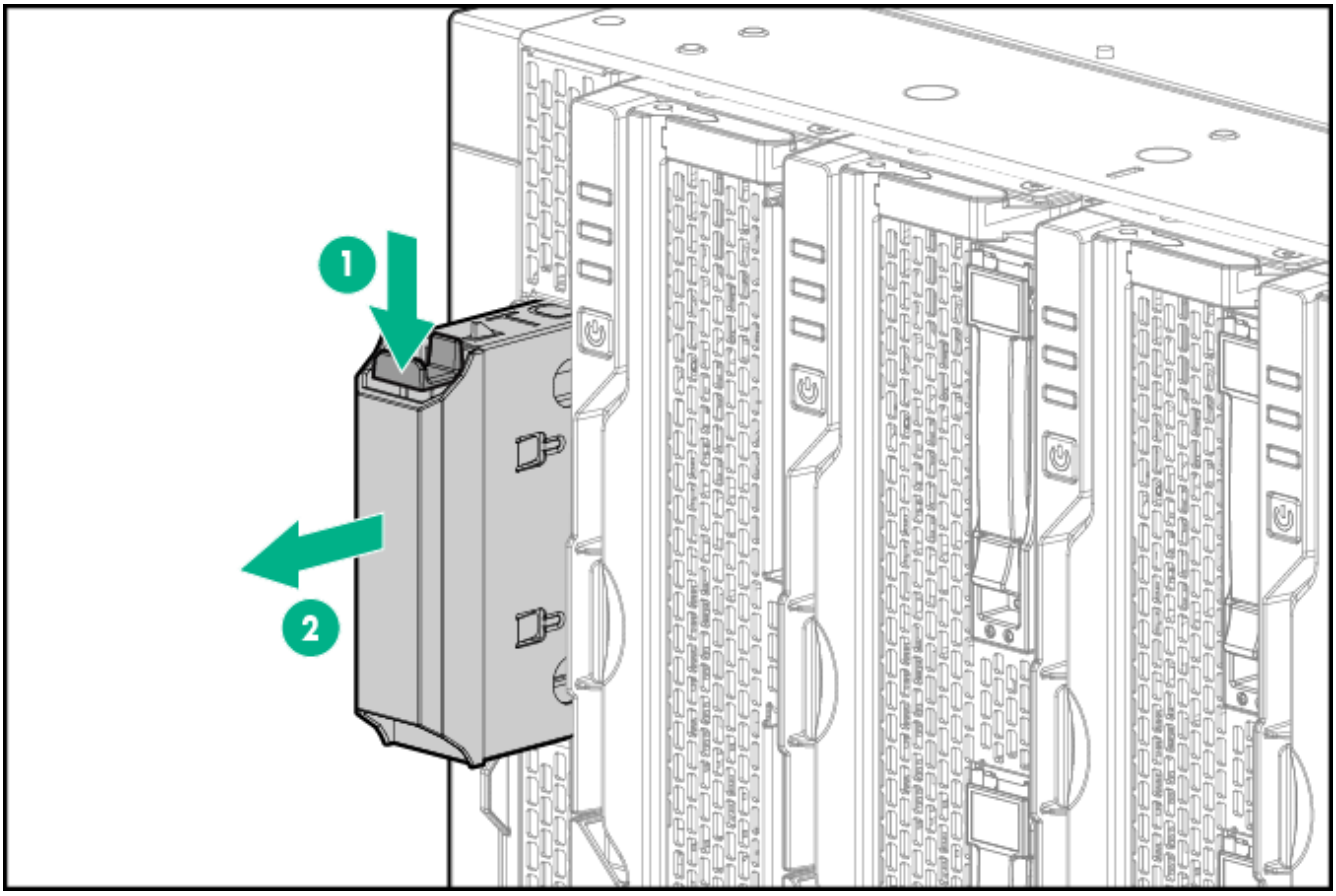

Slide the appliance module into the bay until it clicks into place.

Removing and replacing a fan

About this task

CAUTION

Mixing fan types within a frame is not supported except briefly during migration of all fans in a frame from one type to another as part of an online fan type upgrade.

This procedure is for single fan replacement. For the procedure on migrating all fans in a frame from one type of fan to another see the **HPE Synergy 12000 Frame Setup and Installation Guide**.

NOTE

For optimal thermal conditions all ten fans bays should be populated. Removal and replacement of multiple fans should be done sequentially one at a time to ensure optimal cooling capacity during the replacement process.

Squeeze the handle, and then pull the fan from the frame.

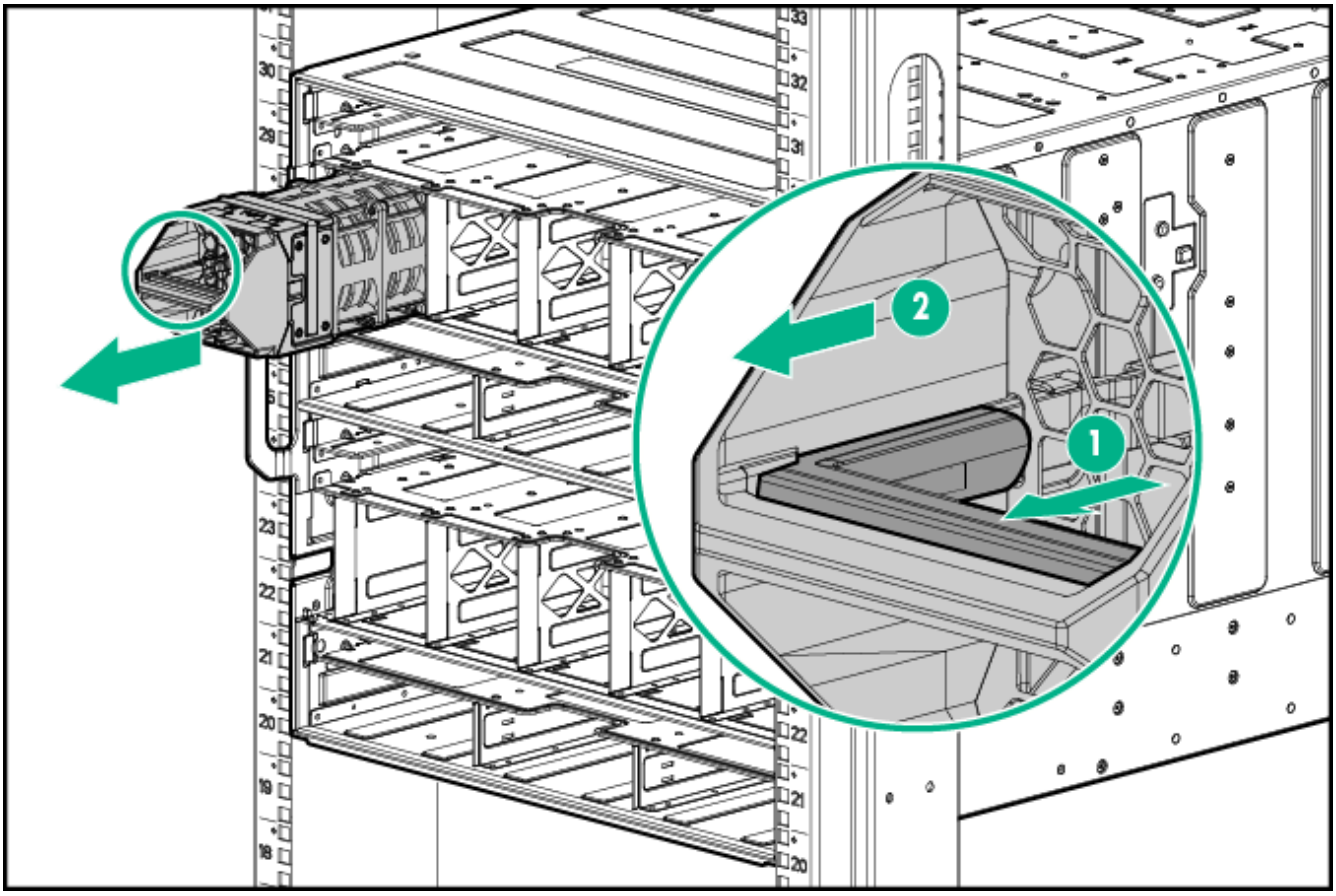

To replace the component, reverse the removal procedure.

Removing and replacing a frame lift handle

Procedure

1. Slide the frame into the rack until the rear lift handles are close to the rack. While still supporting the frame with the front lift handles, remove the rear lift handles from each side of the frame. Then, slide the frame halfway into the rack.

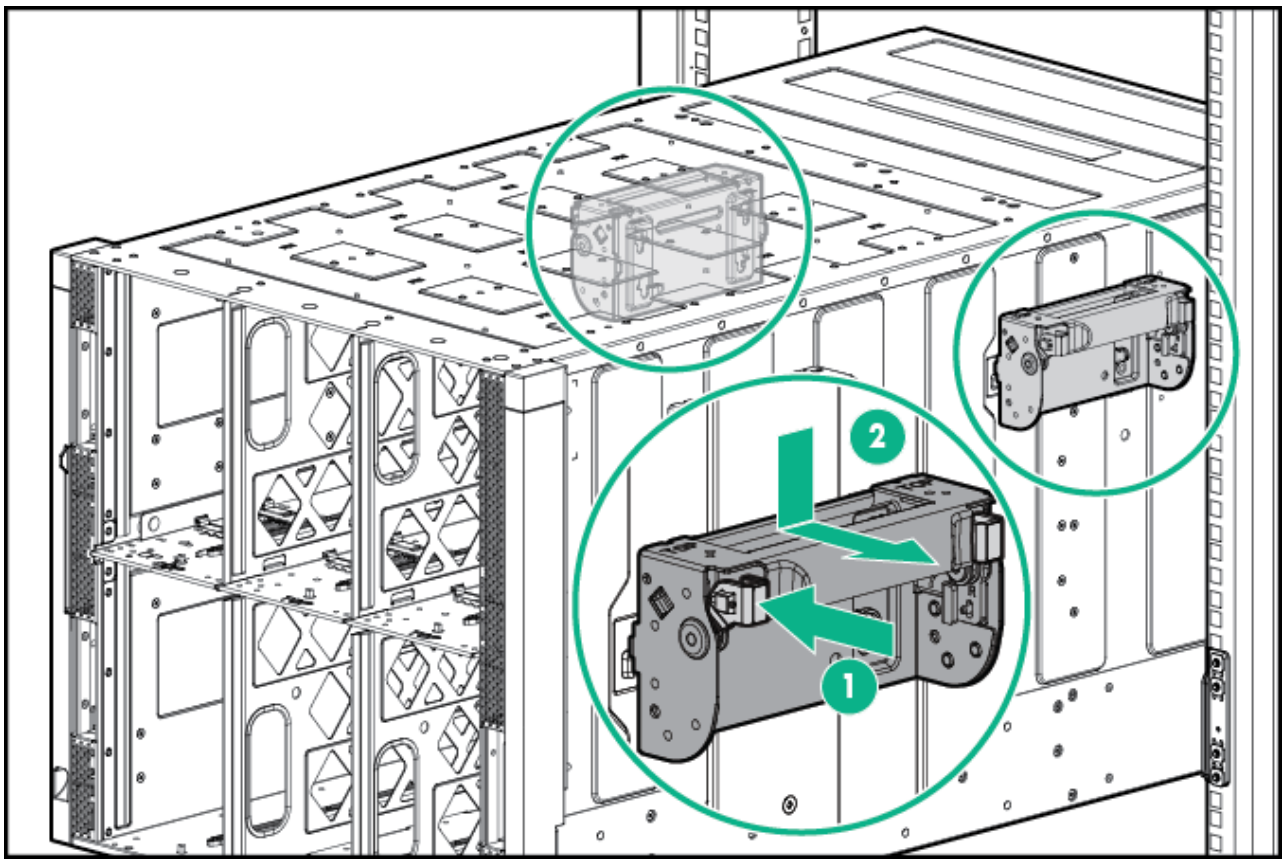

2. Slide the frame into the rack until the front lift handles are close to the rack. Remove the front lift handles from each side of the frame, and then slide the frame fully into the rack.

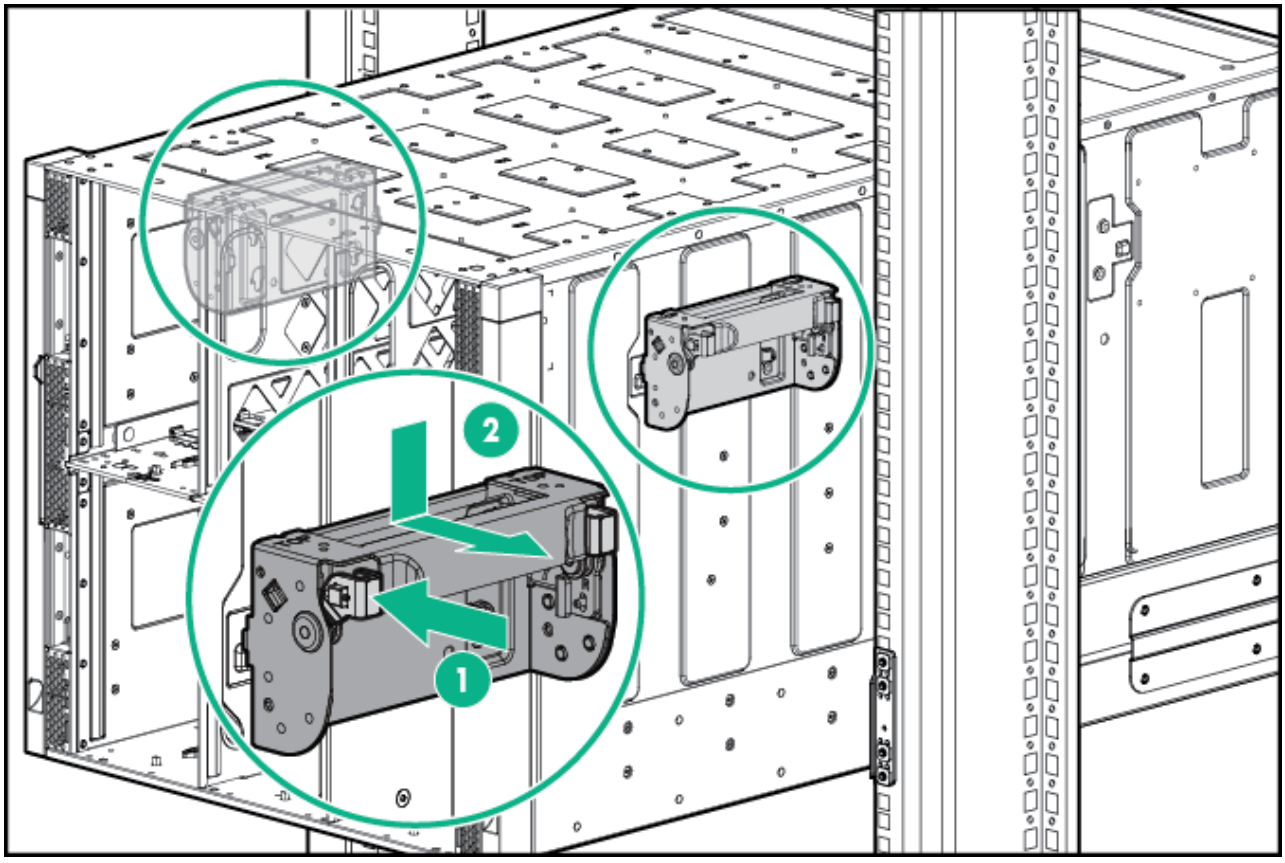

Results

To replace the component, reverse the removal procedure.

Removing and replacing a frame link module blank

About this task

Install a frame link module blank in any unused frame link module bay.

Procedure

1. Press down on the release buttons.
2. Remove the frame link module blank.

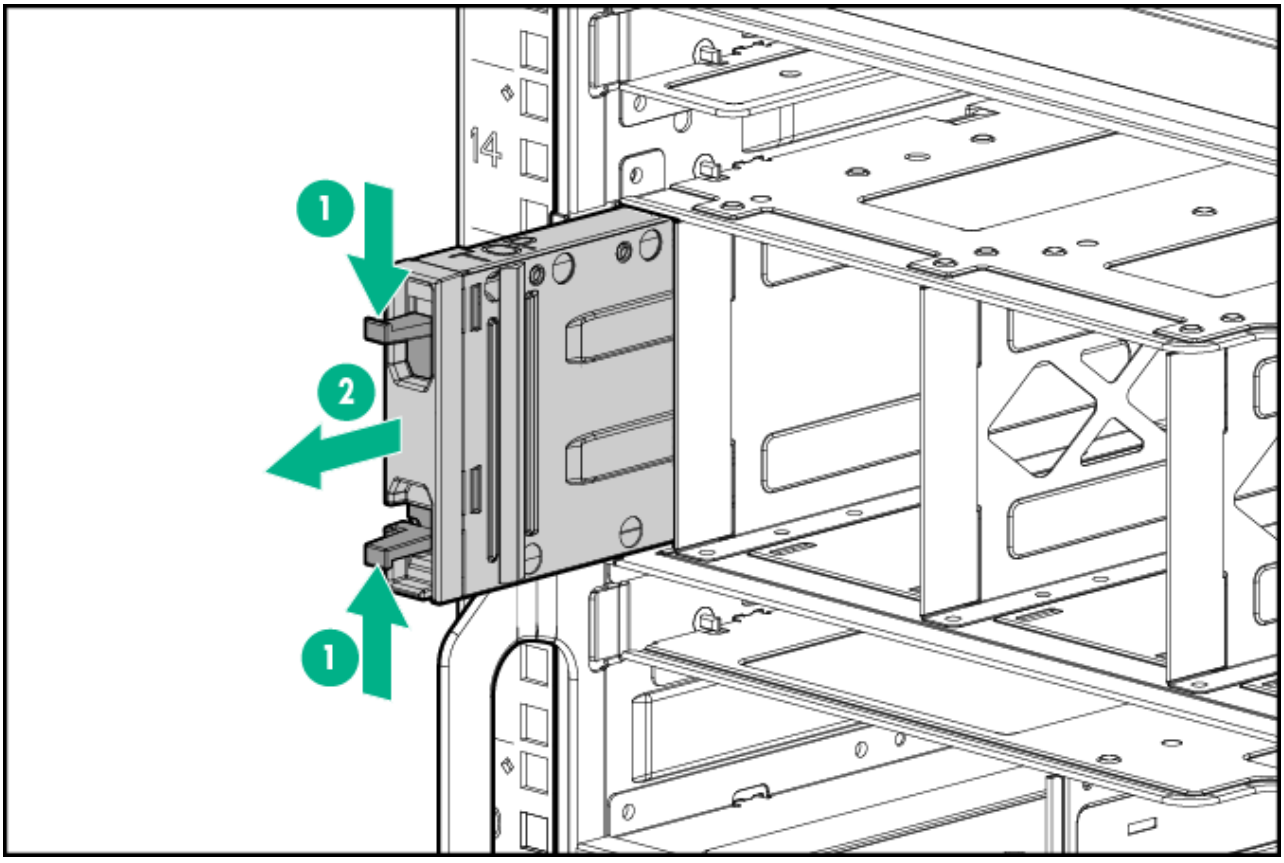

Results

To replace the component, reverse the removal procedure.

Removing and replacing a frame link module

About this task

Procedure

1. Push the top tab in.

   The release lever pops open.

2. Open the release lever.
3. Remove the frame link module.

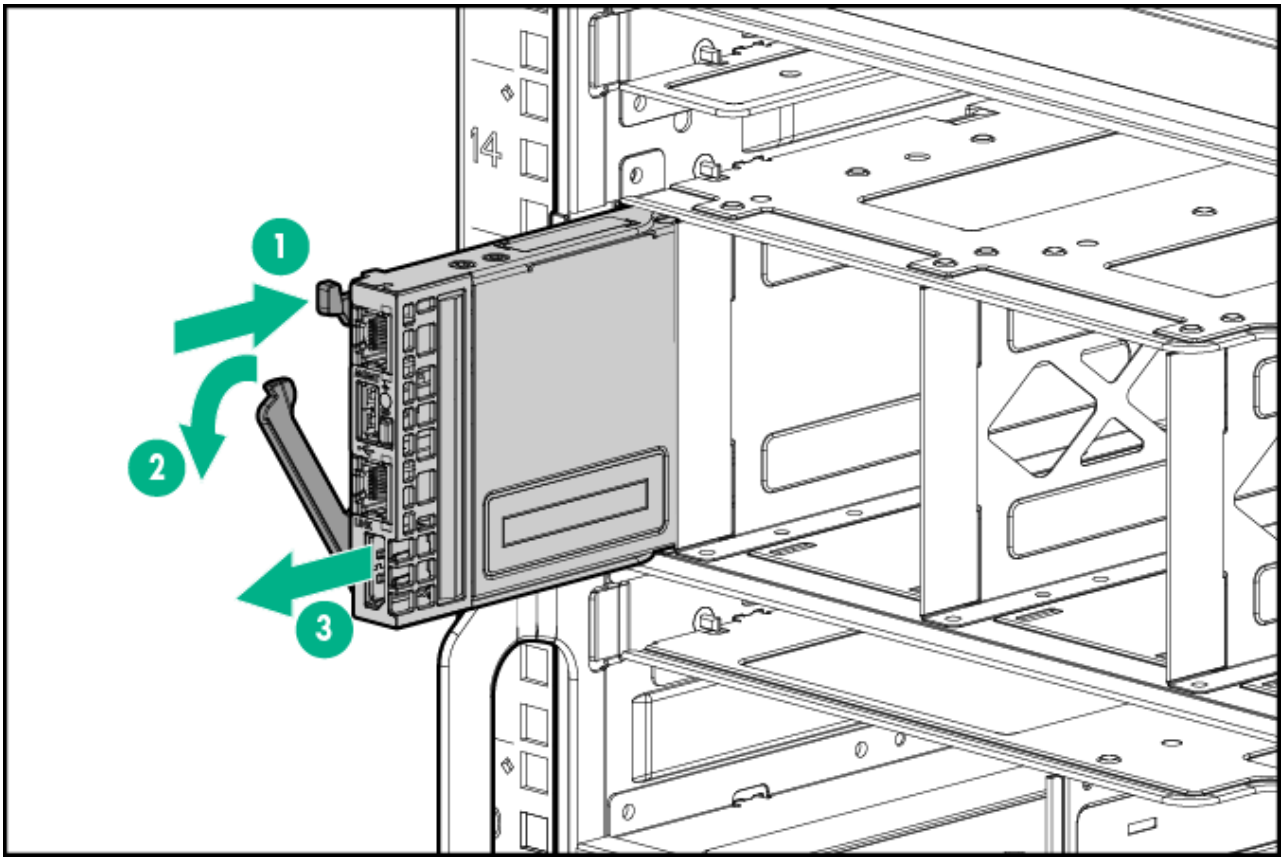

Results

To replace the component, reverse the removal procedure.

Removing and replacing a front panel assembly

Procedure

1. Remove the bezel from the right side of the frame.

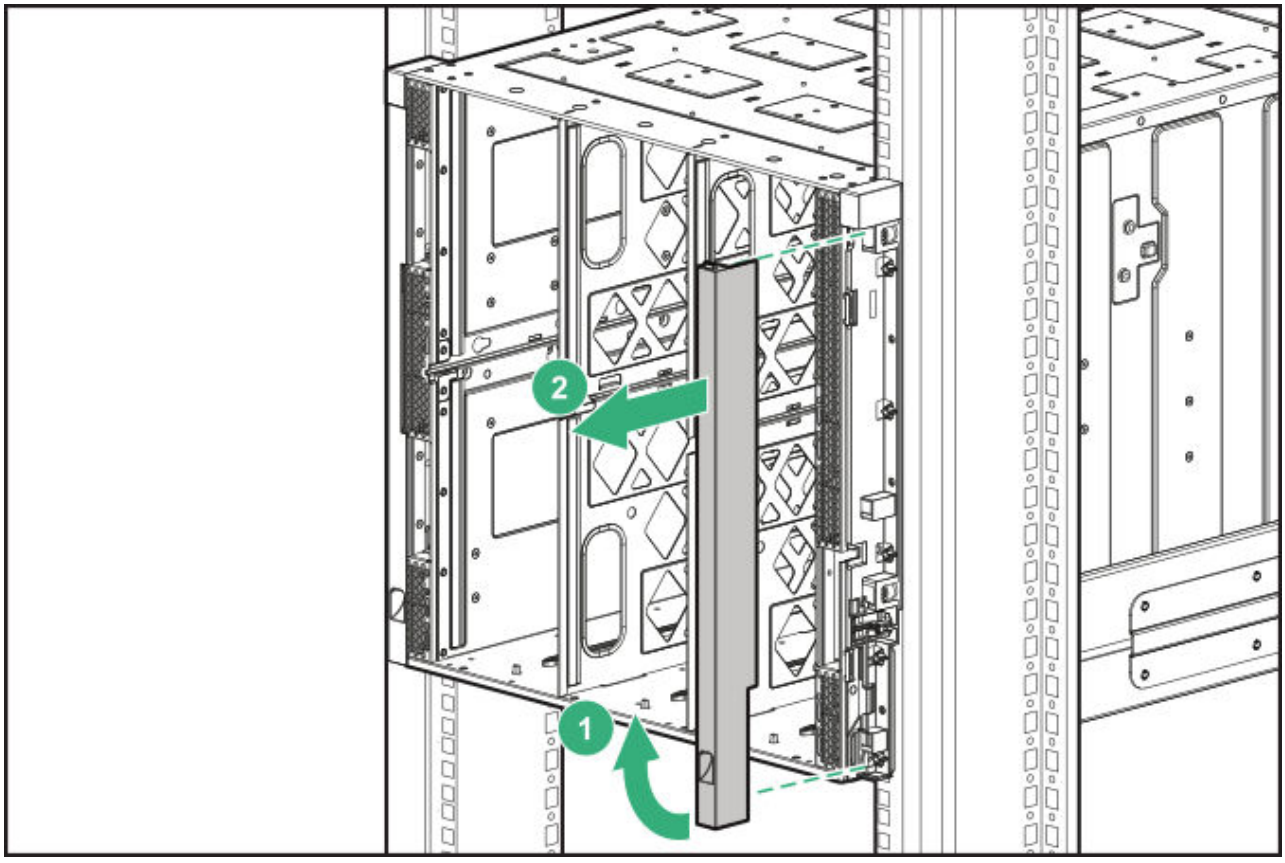

2. Remove the front panel assembly.

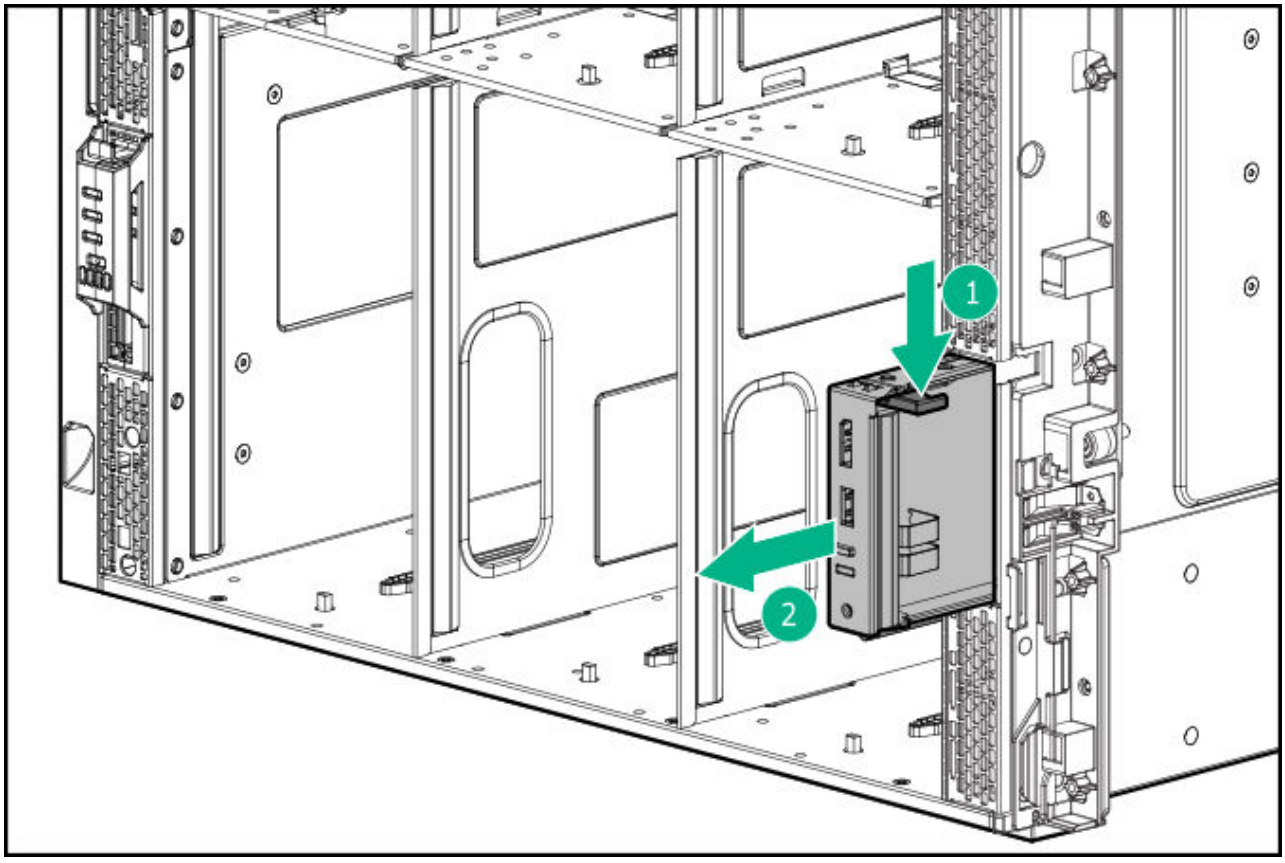

Results

To replace the component, reverse the removal procedure.

Removing and replacing an interconnect module blank

About this task

Install interconnect module blanks in any unused interconnect module bays.

To remove the component, use the pull slots to remove the interconnect module blank.

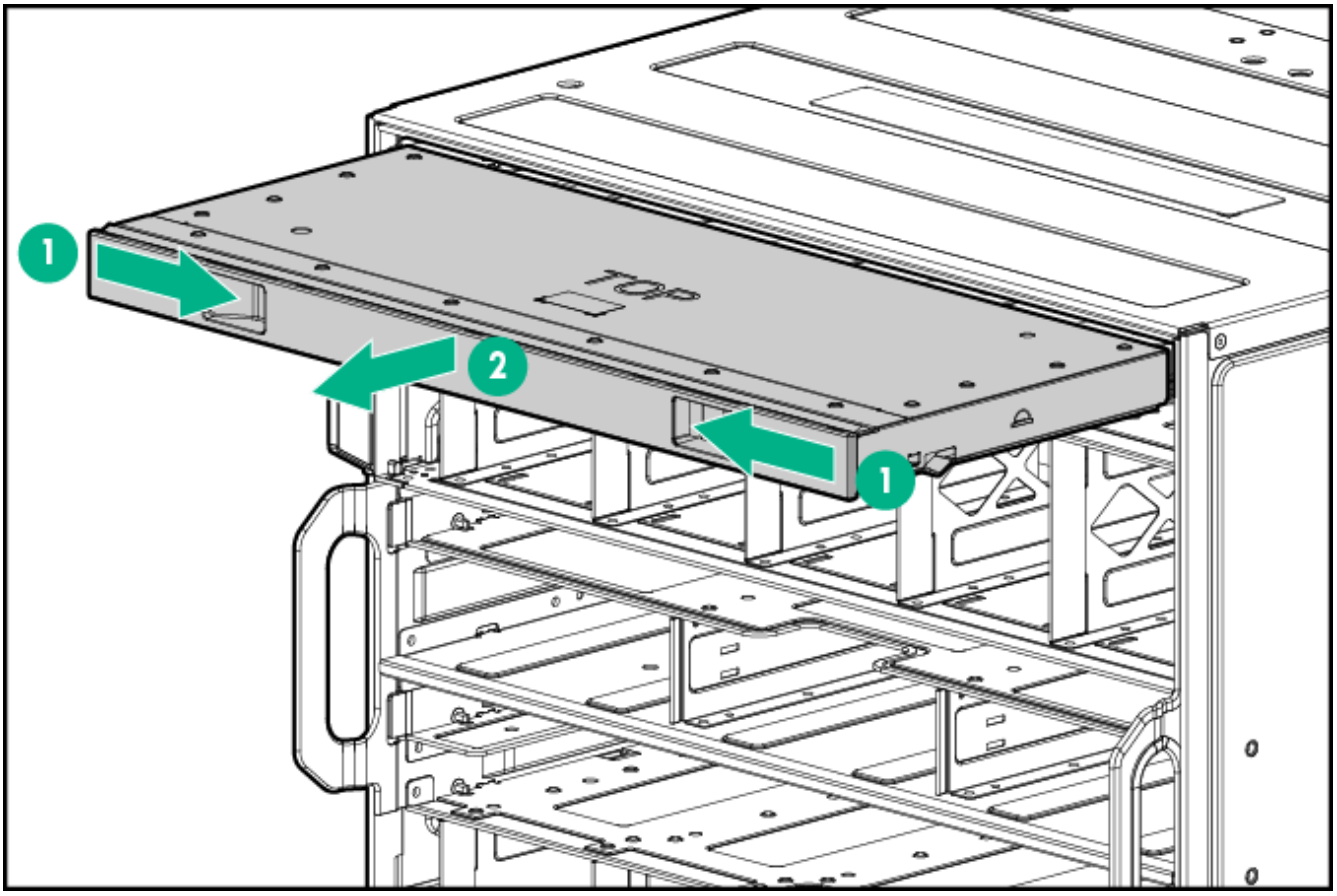

Results

To replace the component, reverse the removal procedure.

Removing and replacing an interconnect module

Procedure

1. Press the tab and open the release lever.
2. Remove the interconnect module.

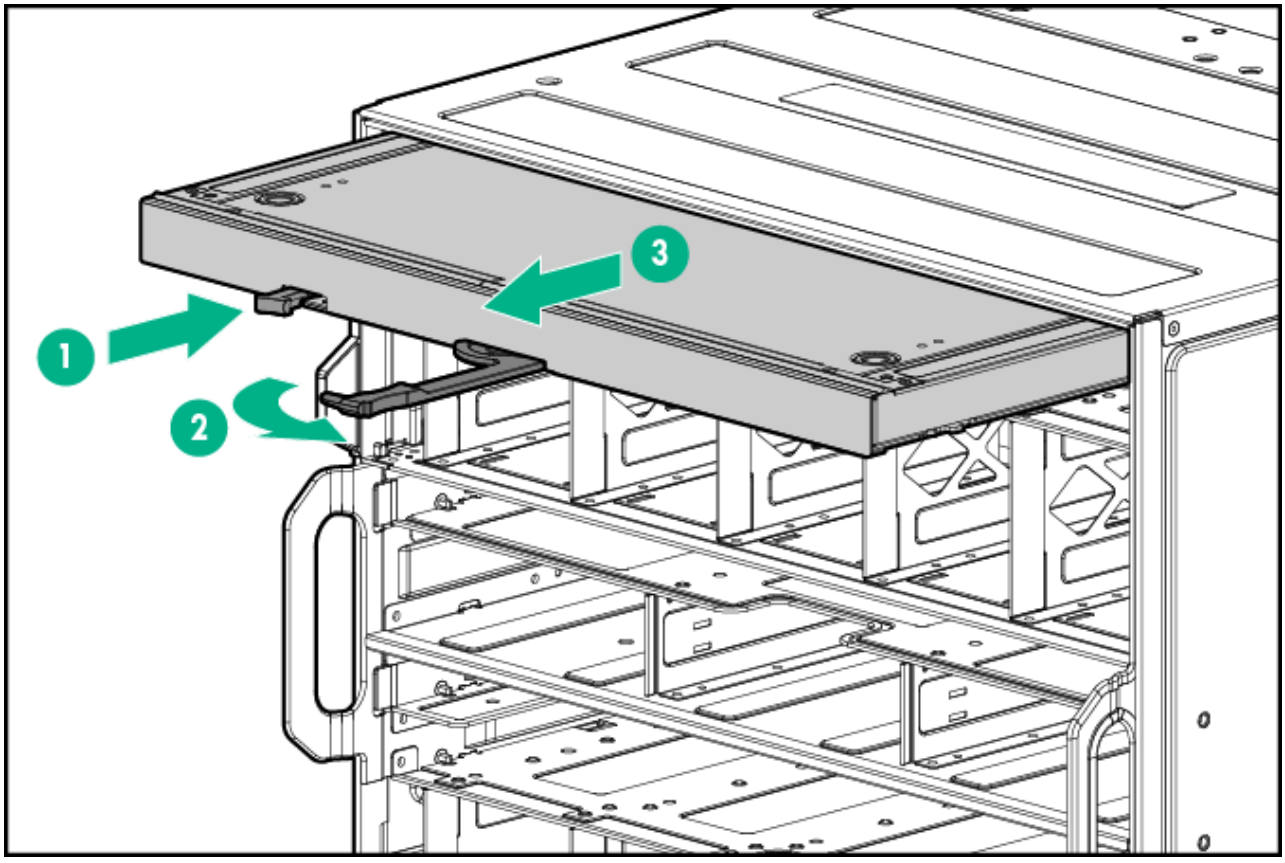

Results

To replace the component, reverse the removal procedure.

Removing and replacing a power supply blank

About this task

Install power supply blanks in any unused power supply bays.

> **WARNING**
> To reduce the risk of personal injury from hot surfaces, allow the power supply, power supply blank, or dual slot power supply adapter to cool before touching it.

Procedure

1. Press the release lever.
2. Squeeze the handle and pull the power supply blank from the frame.

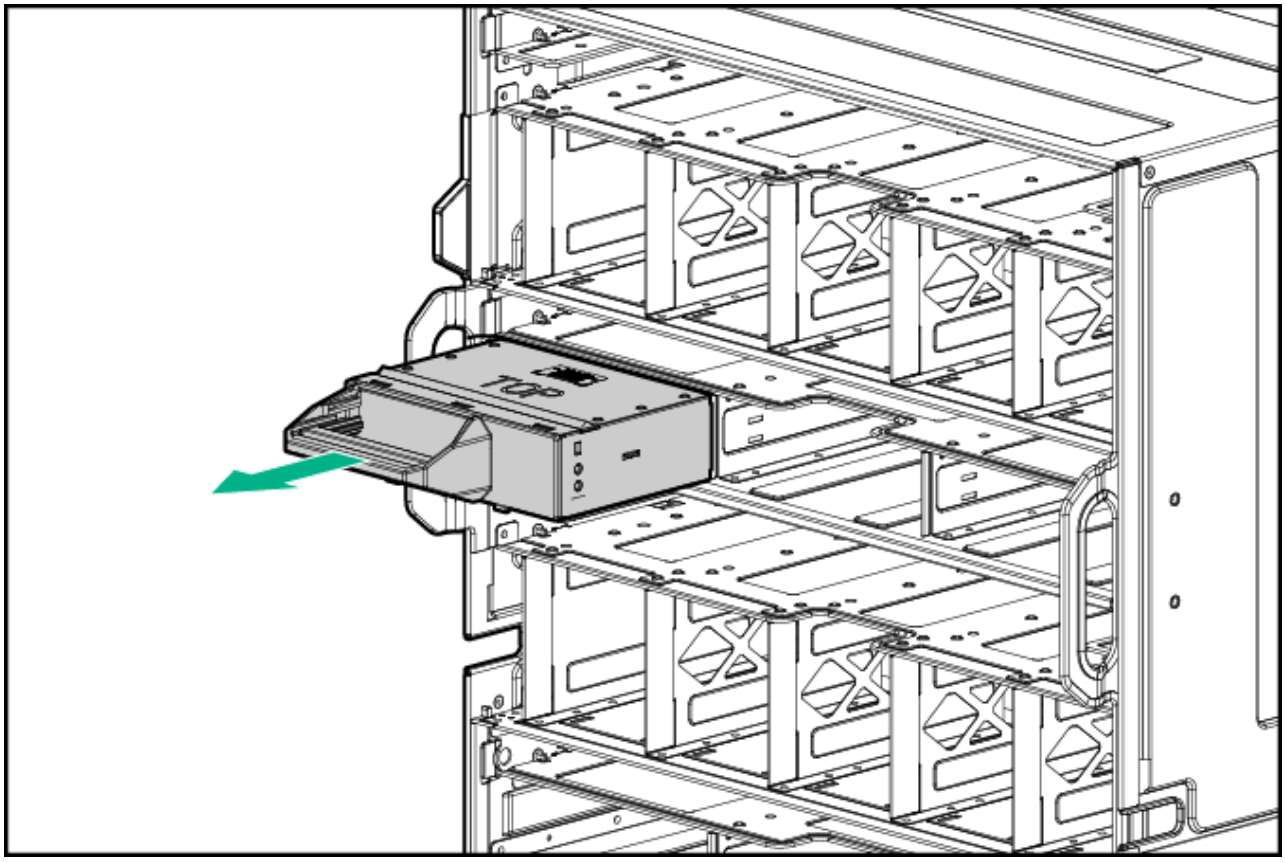

Results

To replace the component, reverse the removal procedure.

Removing and replacing a power supply

About this task

Sufficient power supplies must be installed to support the total power requirements of the devices, interconnect modules, and infrastructure components installed in the frame. Power estimates for HPE

Synergy can be provided using the HPE Power Advisor. For more information about the HPE Power Advisor see the Hewlett Packard Enterprise website (**www.hpe.com/info/poweradviser**)

WARNING

To reduce the risk of personal injury from hot surfaces, allow the power supply, power supply blank, or dual slot power supply adapter to cool before touching it.

WARNING

To reduce the risk of electric shock or damage to the equipment, do not connect the power cord to the power supply until the power supply is installed.

Install power supply blanks in any unused power supply bays.

Procedure

1. If using zip ties, unfasten the reusable zip tie. Retain for replacement.
2. Disconnect the power cord from the power supply.
3. Squeeze the handle, and then pull the power supply from the frame.

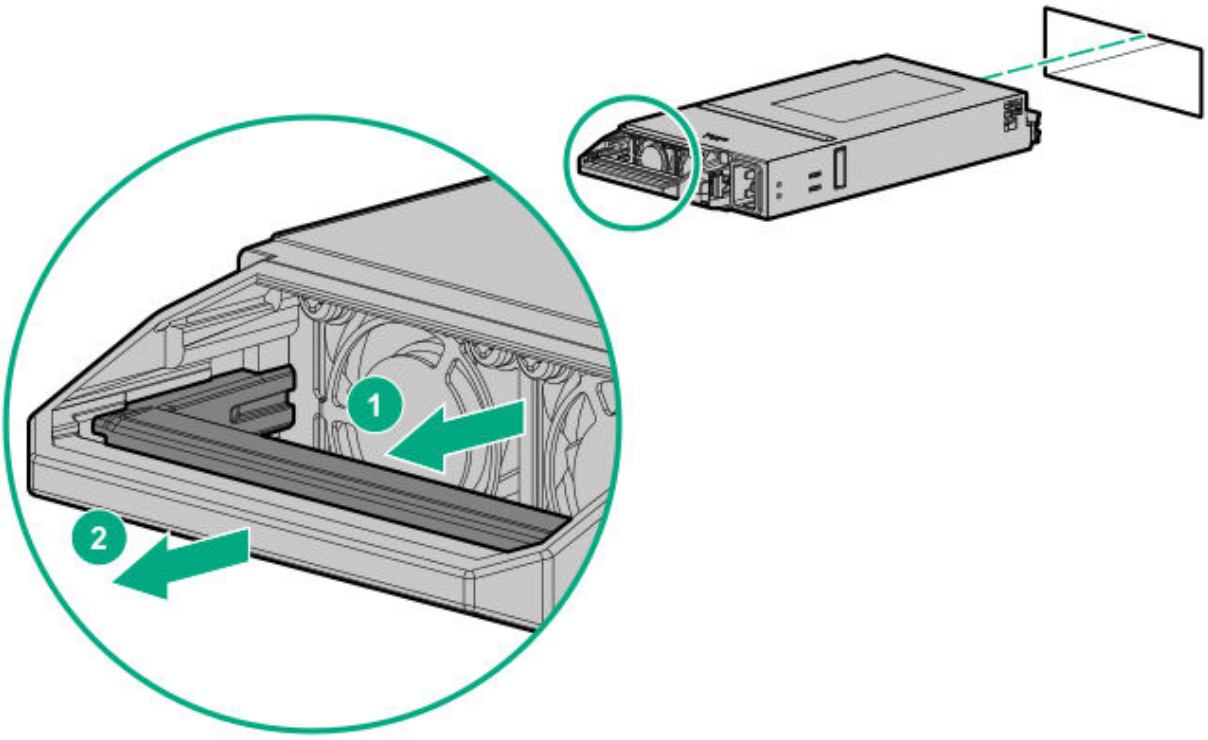

Results

To replace the component, align and slide the power supply into the bay until it locks into place.

Removing and replacing a dual slot power supply adapter

About this task

Sufficient power supplies must be installed to support the total power requirements of the devices, interconnect modules, and infrastructure components installed in the frame. Power estimates for HPE Synergy can be provided using the HPE Power Advisor. For more information about the HPE Power Advisor see the Hewlett Packard Enterprise website (**www.hpe.com/info/poweradvisor**)

WARNING

To reduce the risk of personal injury from hot surfaces, allow the power supply, power supply blank, or dual slot power supply adapter to cool before touching it.

WARNING

To reduce the risk of electric shock or damage to the equipment, do not connect the power cord to the power supply until the power supply is installed.

All flex slot power supplies must be removed from the dual slot power supply adapter before removal of the adapter.

Procedure

1. If using zip ties on the power supply, unfasten the reusable zip tie. Retain for replacement.
2. Disconnect the power cord from the flex slot power supply.
3. Squeeze the handle, and then pull the flex slot power supply from the frame.

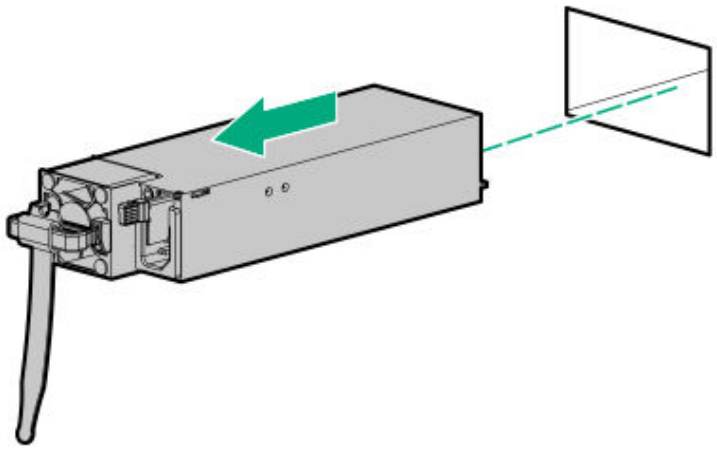

4. repeat for the second flex slot power supply.
5. Squeeze the handle, and then pull the dual slot power supply adapter from the frame.

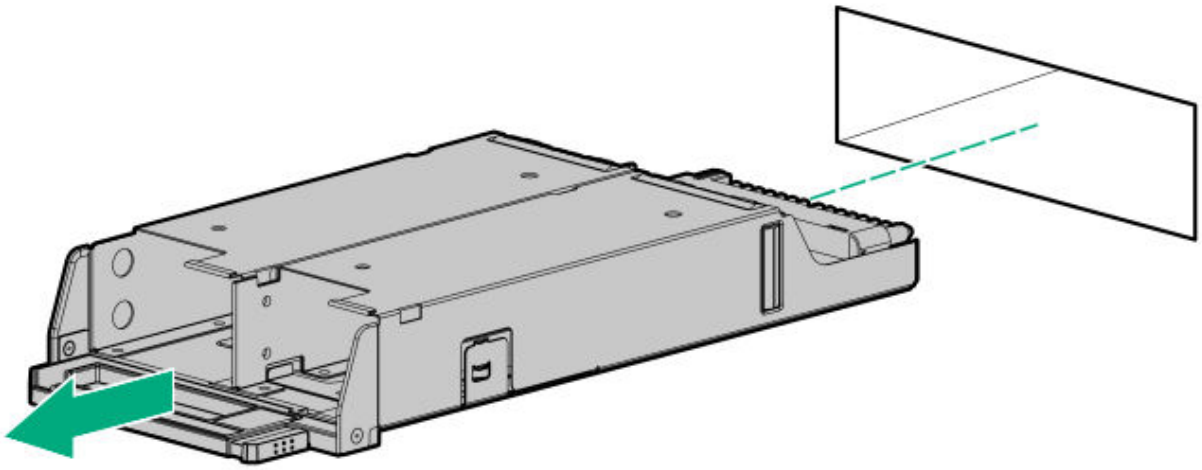

Results

To replace the component, align and slide the dual slot power supply adapter into the frame until it locks into place.

NOTE

Two power supplies go in one dual slot power supply adapter. When this power solution is used, all frame power supply bays must be populated with these power supplies and adapters. Mixing flex slot power supplies and other types of power supplies is not supported in a frame.

Removing and replacing a flex slot power supply

About this task

Sufficient power supplies must be installed to support the total power requirements of the devices, interconnect modules, and infrastructure components installed in the frame. Power estimates for HPE

Synergy can be provided using the HPE Power Advisor. For more information about the HPE Power Advisor see the Hewlett Packard Enterprise website (**www.hpe.com/info/poweradviser**)

WARNING

To reduce the risk of personal injury from hot surfaces, allow the power supply, power supply blank, or dual slot power supply adapter to cool before touching it.

WARNING

To reduce the risk of electric shock or damage to the equipment, do not connect the power cord to the power supply until the power supply is installed.

NOTE

Balance facility power phases, unbalance may cause circuit breakers to trip.

Two flex slot power supplies must be installed into a dual slot power supply adapter.

All power supply configuration for the frame must be of the same type. Mixed-type power supply configurations are not supported.

Procedure

1. If using zip ties, unfasten the reusable zip tie. Retain for replacement.
2. Disconnect the power cord from the flex slot power supply.
3. Squeeze the handle, and then pull the flex slot power supply from the frame.

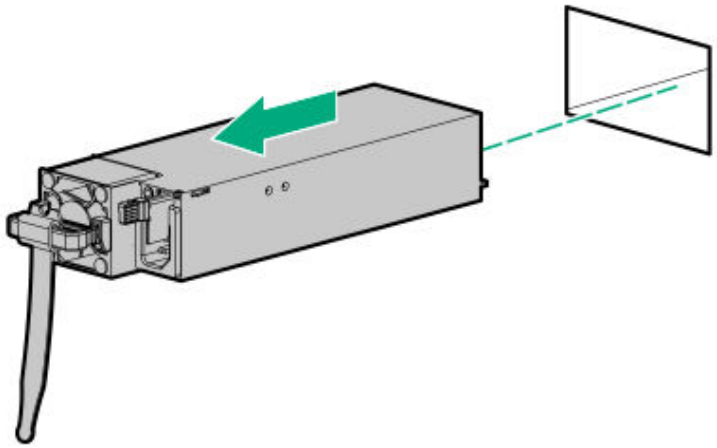

Results

To replace the component, align and slide the flex slot power supply into the dual slot power supply adapter until it locks into place.

Removing and replacing a –48V DC power supply

Prerequisites

- Be sure the -48V DC power cables are installed. For more information, see the HPE Synergy 12000 Frame -48V DC Power Cable Installation Instructions.
- Be sure that a ground connection to the HPE Synergy 12000 Frame has been properly installed. See Installing the DC power grounding kit or the document that ships with the kit.
- Gather the following tools:
  - Torx T-25 screwdriver
  - Crimper

About this task

WARNING

To reduce the risk of electric shock, be sure that the cable grounding kit is properly installed and connected to a suitable protective earth terminal before connecting the power source to the frame.

WARNING

To reduce the risk of personal injury from hot surfaces, allow the power supply, power supply blank, or dual slot power supply adapter to cool before touching it.

For power specifications and calculators to determine electrical and heat loading for HPE Synergy, see the HPE Synergy Planning Tool on the Hewlett Packard Enterprise website (**https://poweradvisorext.it.hpe.com/**).

Two lugs ship in the kit with the -48V DC power supply. The two-hole lug specification is as follows:

- Width – 0.41 in (10.41 mm)
- Bolt hole size – 0.20 in (5.08 mm)
- Hole spacing – 0.63 in (16.00 mm)

Install power supply blanks in any unused power supply bays.

Procedure

1. If using zip ties, unfasten the reusable zip tie. Retain for replacement.
2. Disconnect the power cord from the power source.

3. Squeeze the handle, and then pull the –48V DC power supply from the frame.

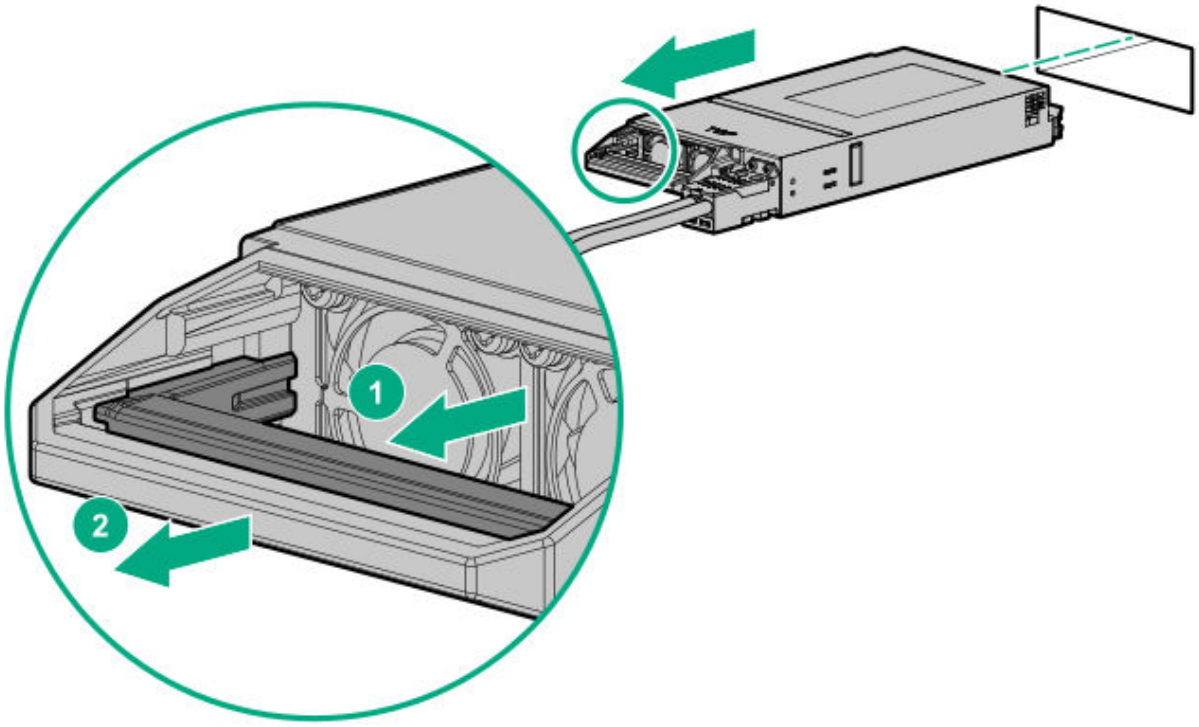

4. Place the –48V DC power supply on a flat, level work surface.
5. Open the input connector on the power supply.
6. Using a T25 Torx screwdriver, disconnect and remove the power cables.

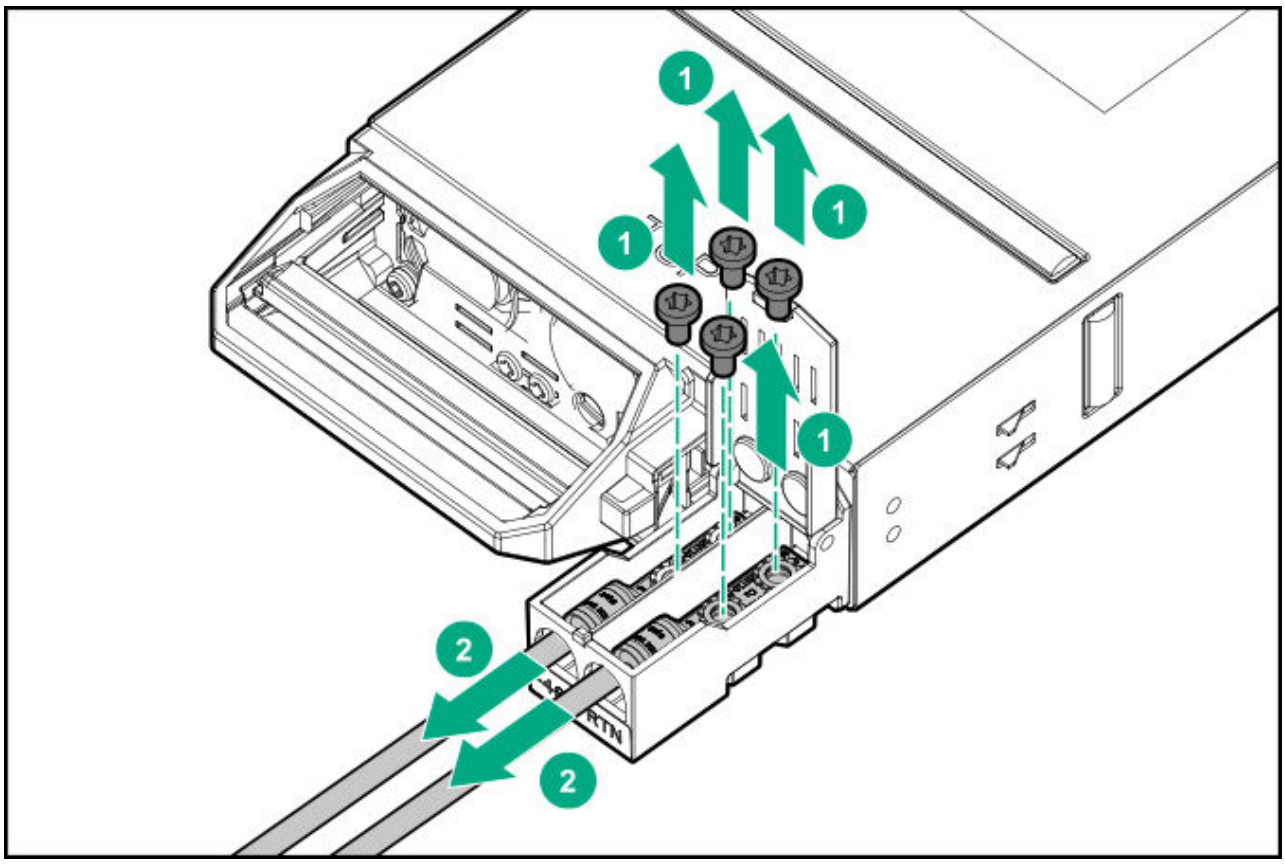

Retain the cables and T25 screws for to install on the replacement –48V DC power supply.

Subtopics

Replacing the –48V DC power supply

Replacing the –48V DC power supply

Procedure

1. Ensure that a ground connection to the HPE Synergy 12000 Frame has been properly installed according to the HPE Synergy 12000 Frame Ground Bond Assembly Installation Instructions.
2. Place the power supply on a flat surface.
3. Open the input connector on the new power supply by lifting the input connector cover.
4. Insert the two-hole lug through the aperture labeled **–48V** on the power supply input connector.

5. Secure the two-hole lug to the -48V DC input connector terminal with two T25 screws.

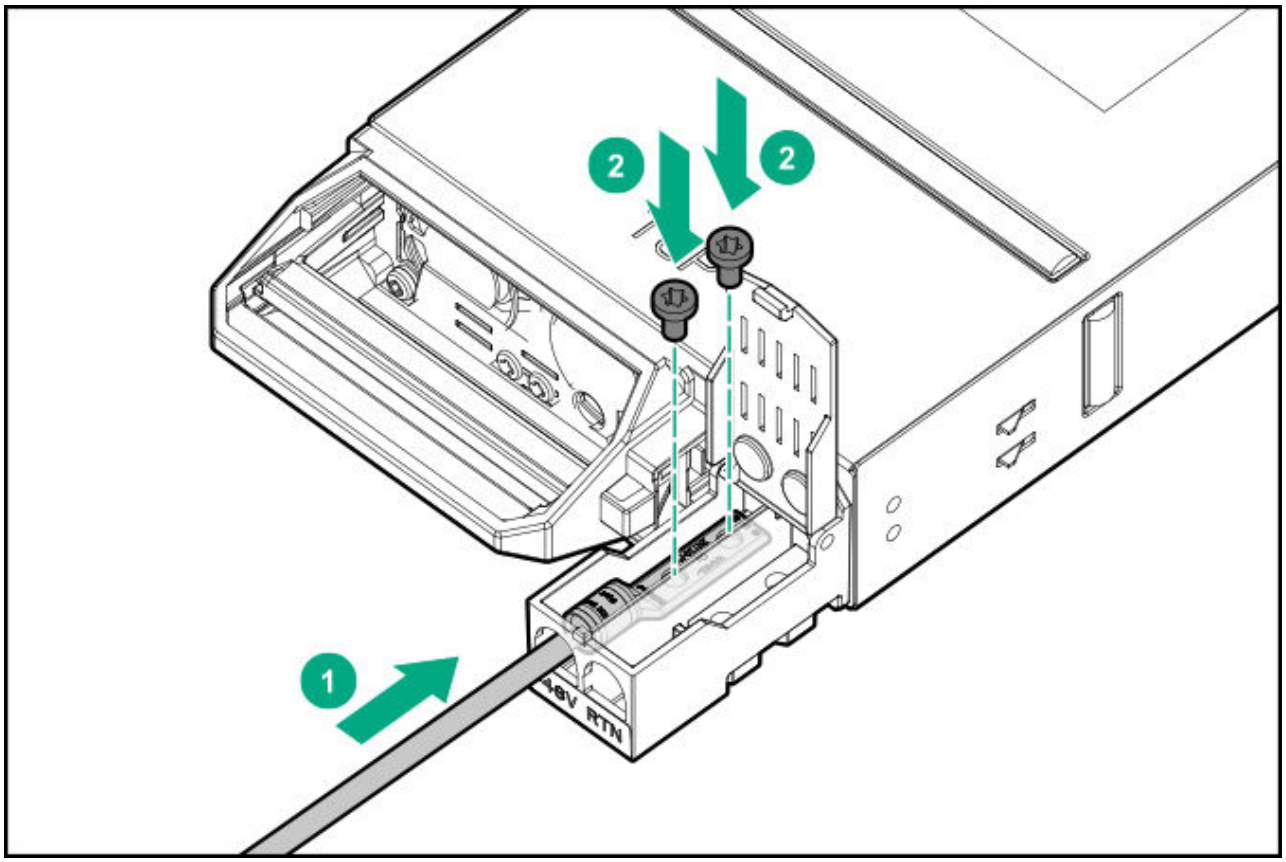

6. Using a torque-controlled T25 screwdriver, tighten both screws to 15lb-in of torque.
7. Insert the two-hole lug through the aperture labeled "RTN" on the power supply input connector.

8. Secure the two-hole lug to the RTN input connector terminal with two T25 screws.

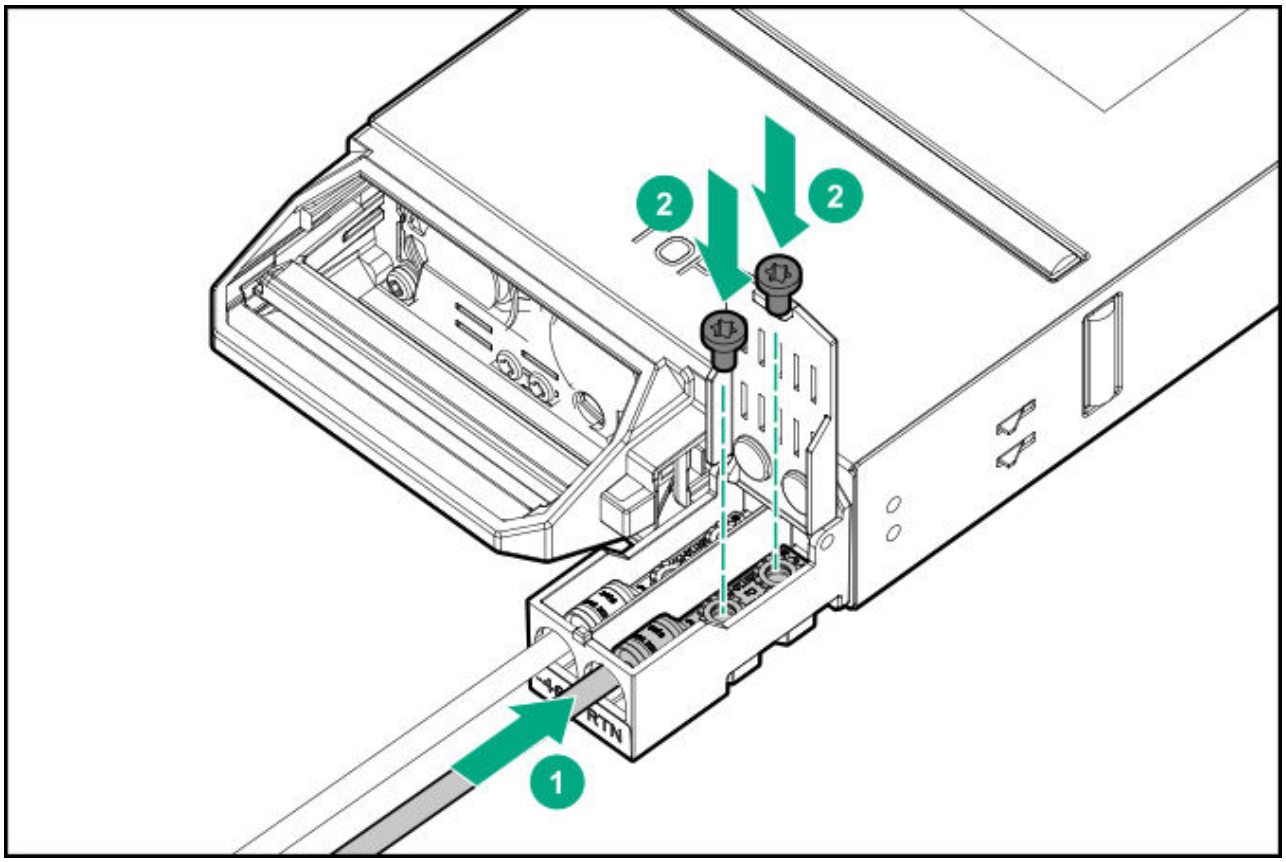

9. Using a torque-controlled T25 screwdriver, tighten both screws to 15lb-in of torque.

.0. Close the input connector cover.

.1. Remove the output connector cover from the new power supply.

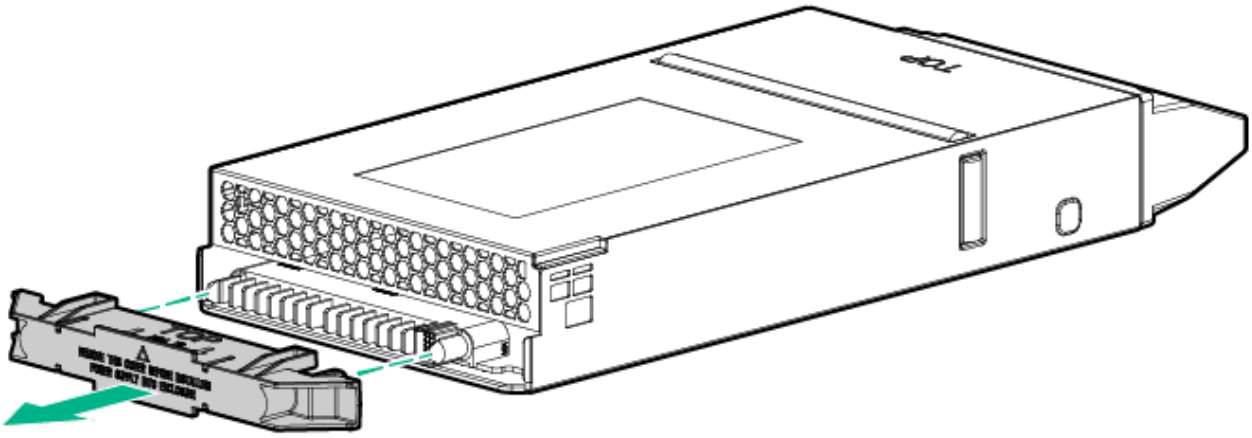

.2. Insert the power supply into the frame until it locks into place. The power supply is marked with TOP to ensure proper orientation during installation.

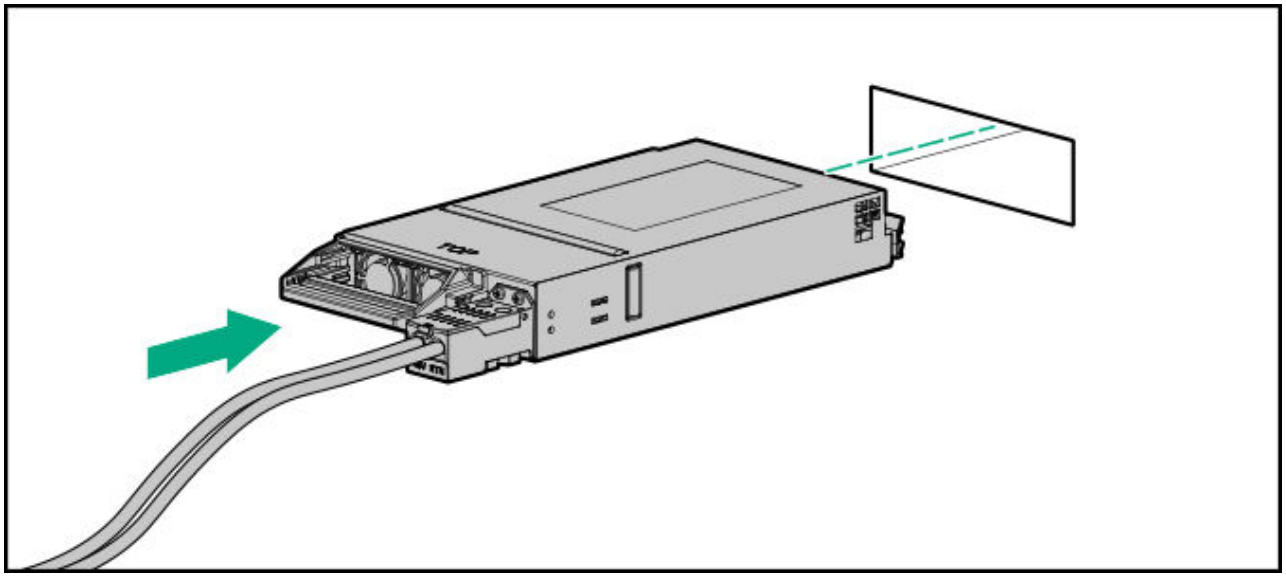

.3. Connect the power cables to the -48V DC power source.

.4. Turn on or enable the -48V DC power source.

.5. Verify that the power supply LED is green.

Removing and replacing a rear cage

Procedure

1. Power down all compute modules.
2. Power down the frame.

> **IMPORTANT**
>
> To ensure that the components are reinstalled in the same locations from where they were removed, note the device bay locations before you remove them from the frame.

3. Remove all rear frame components:
   a. Remove the frame link modules.
   b. Remove the fans.
   c. Remove the power supplies.
   d. Remove the interconnect modules.
4. Remove all front frame components:
   a. Remove the Composer appliance assembly.
   b. Remove the front panel assembly.
   c. Remove any installed compute modules.
5. From the front of the frame, use a T-25 Torx screwdriver to unscrew the six captive screws.

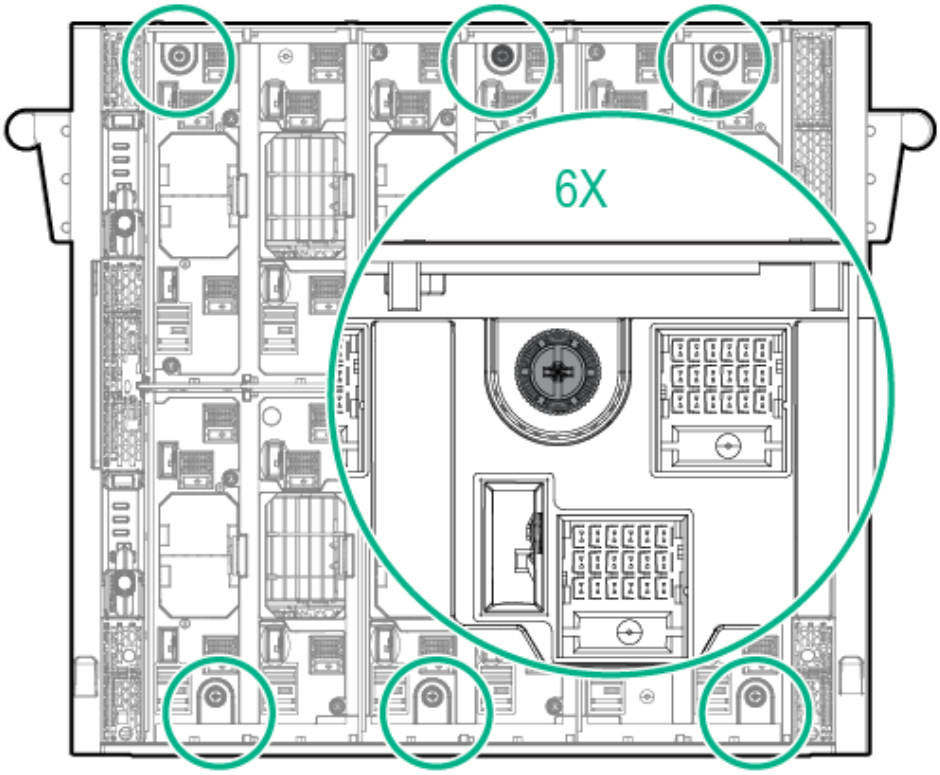

6. From the rear of the frame, use the handles on the rear of the cage to pull the rear cage away from the frame until the safety latch catches.
7. Press in the safety latches, and then carefully remove the rear cage from the frame.

> **WARNING**
>
> After the safety latches have been defeated, be sure to support the bottom of the rear cage when holding the rear cage. Trying to hold the rear cage using the handle after the safety latches have been defeated can result in injury.

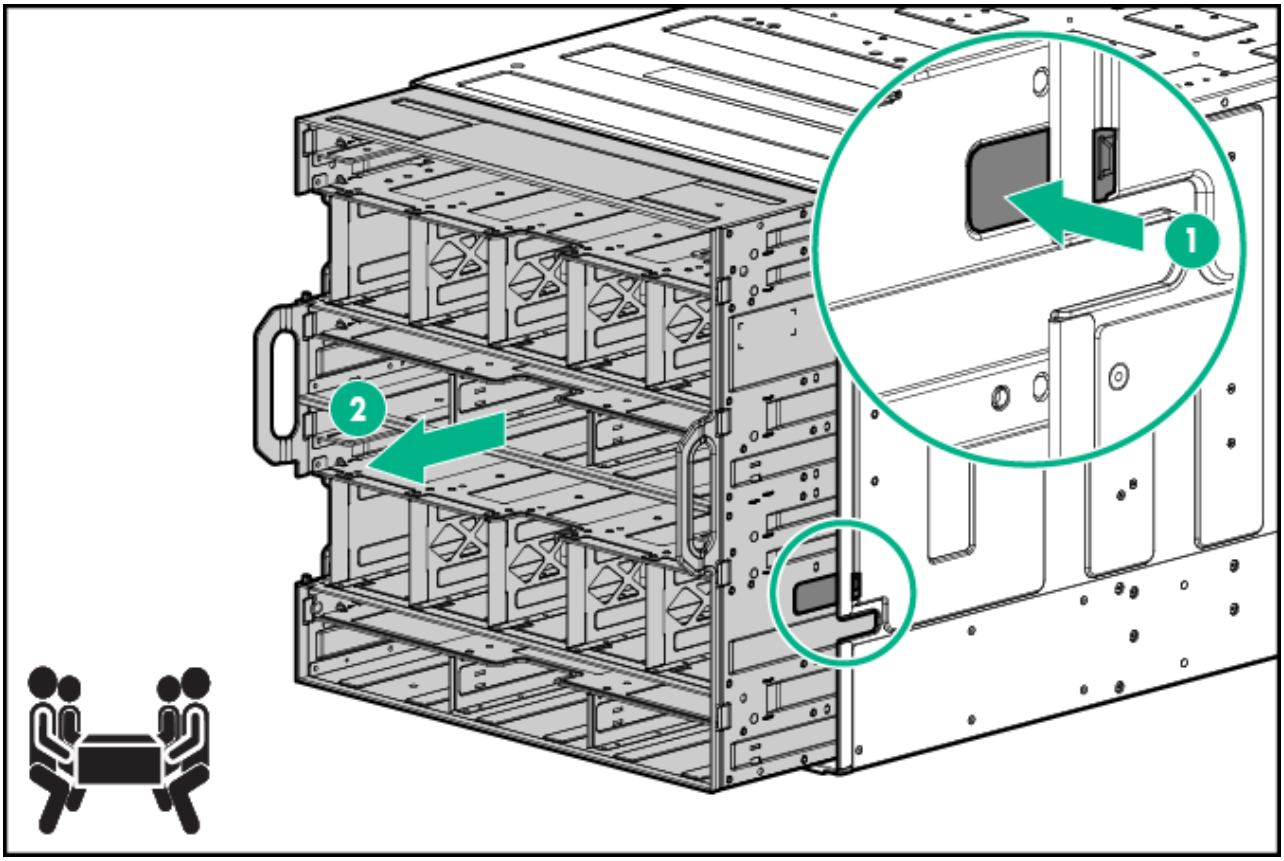

Results

To replace the component, reverse the removal procedure.

Removing and replacing the rack rails

Procedure

1. Begin with the left rack rail. Pull the front rail release lever to release the front rack rail tabs, then shorten the rail.
2. Pull the rear rail release lever to release the rear rack rail tabs.
3. Remove the rack rail.

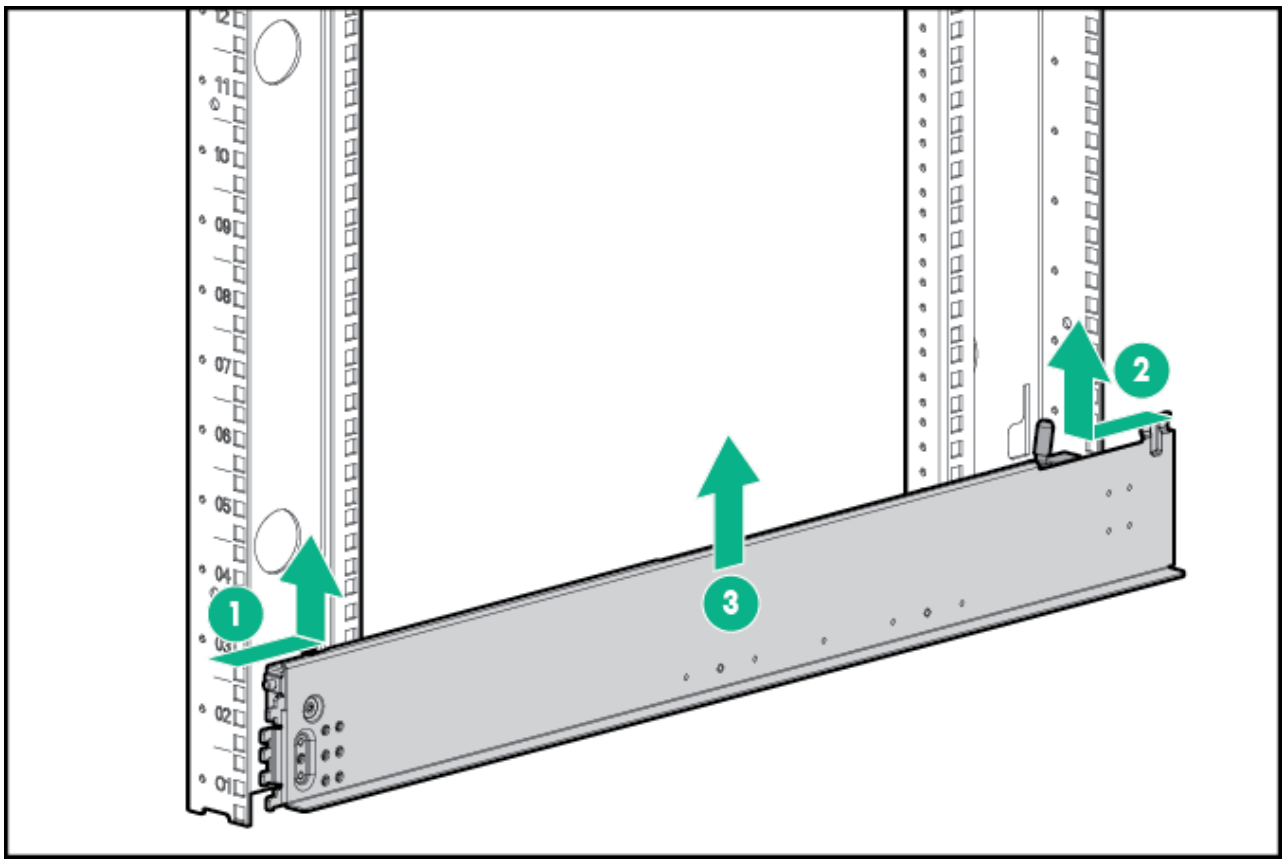

4. Repeat the procedure for the right rack rail.

Subtopics

Replacing the rack rails

Replacing the rack rails

About this task

NOTE

Rack rails are marked "LEFT" and "RIGHT" for identification. Use the rail release levers only when removing the rail from the rack.

Procedure

1. Beginning with the left rack rail, shorten the rail.

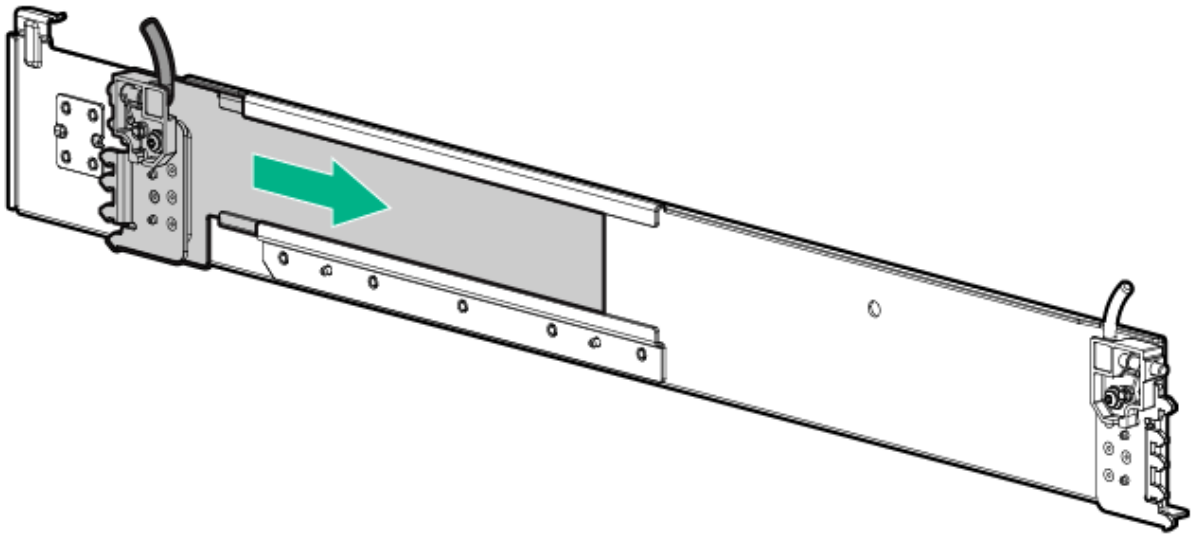

2. Align the rear end of the rail with the rack rear column.
3. Position the rail tabs next to the square openings in the rack rear column.
4. Keeping the rail level, insert the rear rail tabs into the rack rear column, and then push the tabs down into place.

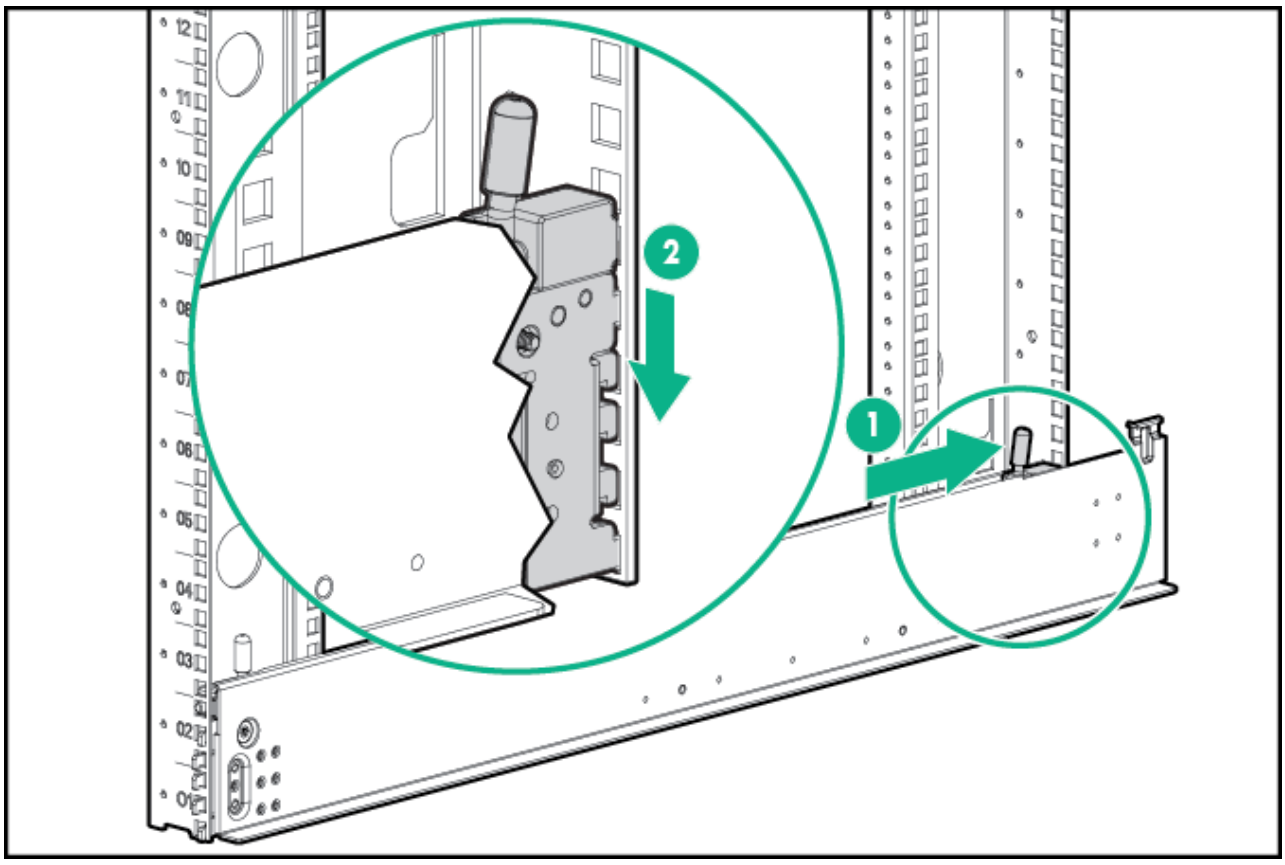

5. Extend the front of the rack rail to the rack front column.
6. Position the rail tabs next to the square openings in the rack front column.
7. Insert the front rail tabs into the rack front column, and then push the tabs down into place.

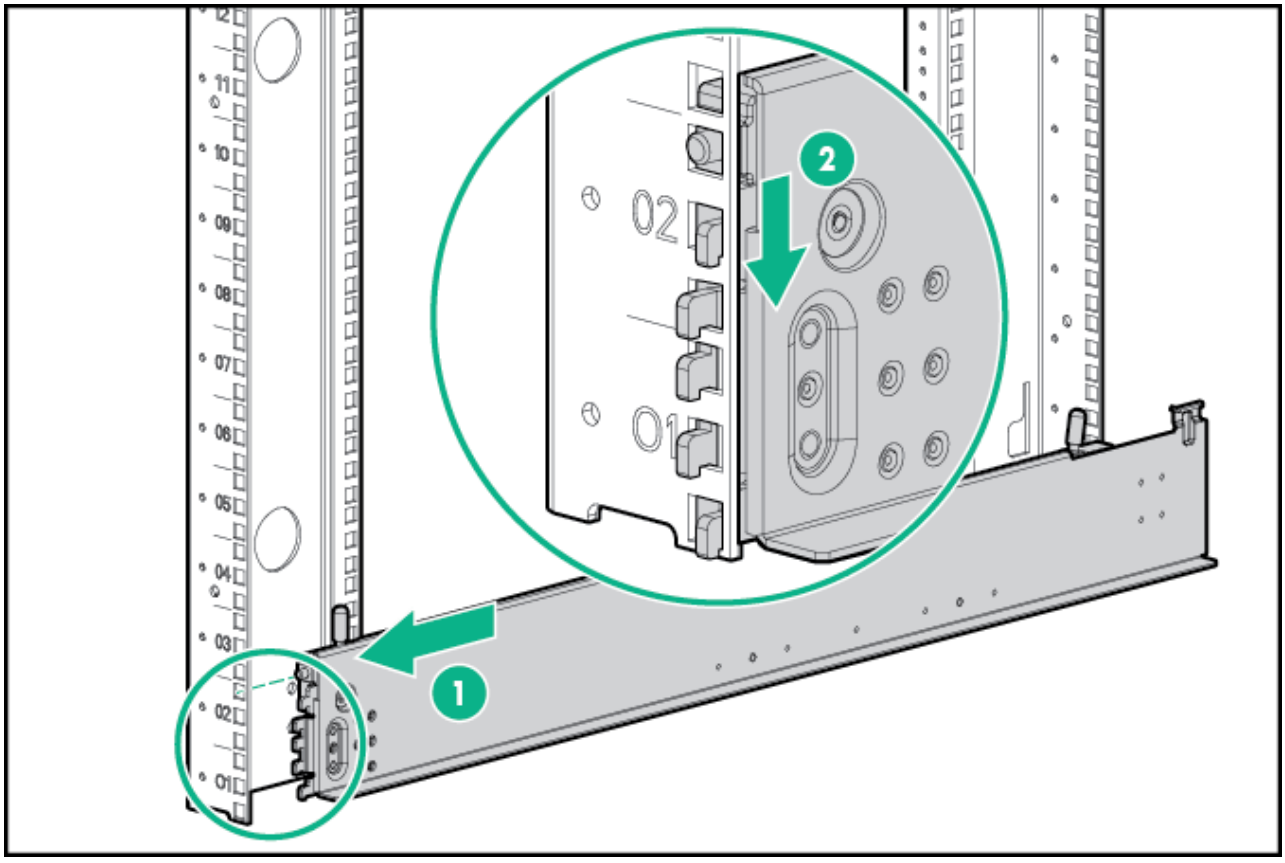

8. Repeat the procedure for the right rack rail.

Component and LED identification

Subtopics

Information pull tabs
Frame front components and device bays
Frame rear components

Information pull tabs

Pull tabs on the HPE Synergy frame front and rear provide system information.

Figure 1. Information pull tab locations

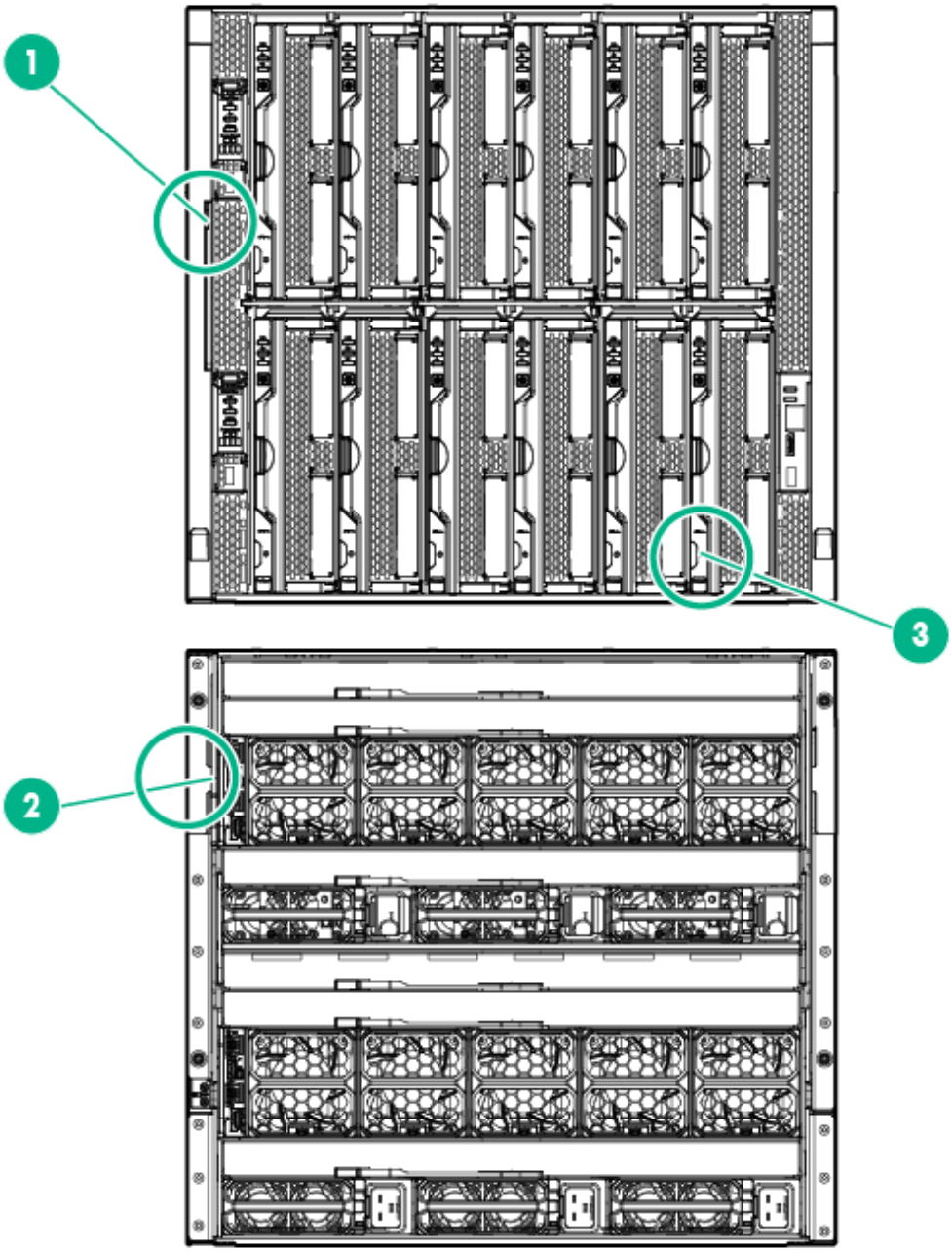

Item	Description
1	The front pull tab (top left) has the frame product ID, serial number, and the device bay nu mbering for the frame front bays.
2	The rear pull tab (top left) has the bay numbering for the frame rear bays.
3	The serial label pull tab is on each compute module and provides the following information: • Product serial number • iLO information

Figure 2. Accessing the information pull tabs

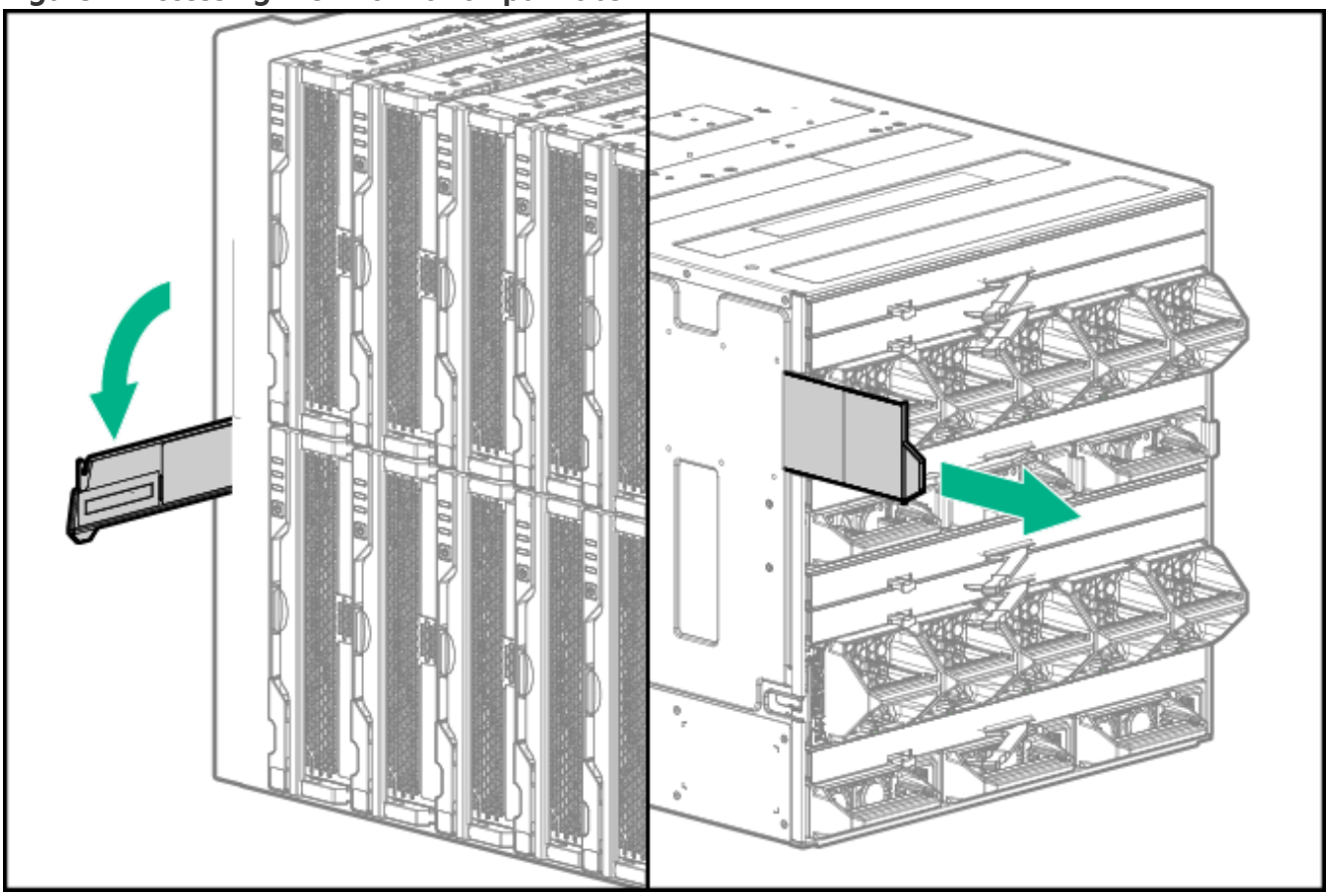

Frame front components and device bays

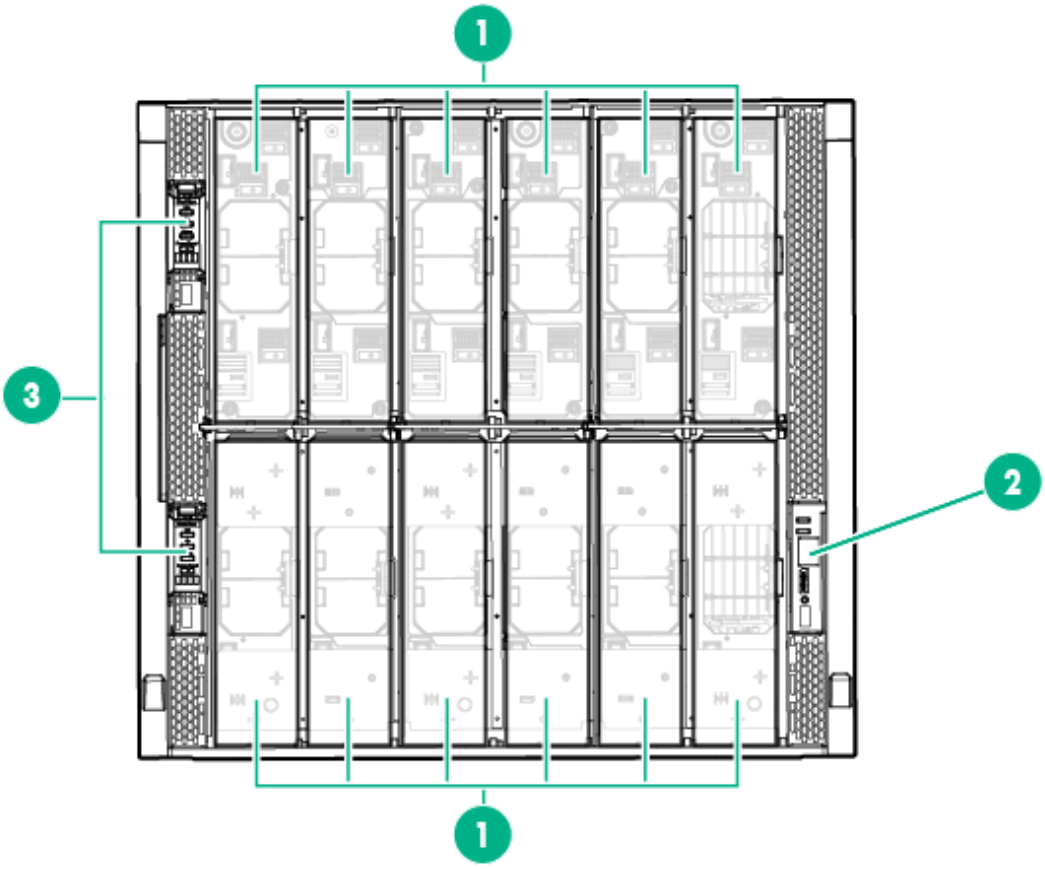

Item	Description
1	Device bays—Compute modules and storage modules.
2	Front panel—Provides access to the HPE Synergy Console, through KVM or laptop.
3	Appliance bays.

Subtopics

Device bay numbering
Front panel components
Appliance module LEDs and components
Compute module LEDs and buttons
Storage module LEDs

Device bay numbering

All device bays in the frame are numbered in consecutive order from lowest to highest, from left to right from top to bottom, as observed by a user looking directly at the frame.

Devices larger than half-height (multi-bay devices) are numbered according to the lowest device bay number that the multi-bay device occupies.

For an even number of device modules, they must be installed next to each other between sets of vertical partitions if all device bays in the frame are to be used.

For an odd number of single-wide full-height device modules, an even number must be installed next to each other between each vertical partition, and the odd module must be installed in device bay 2 if all device bays in the frame are to be used.

The device bay numbering is available on the Information pull tabs.

Device bay type	Device bay numbering
Single-wide, full-height	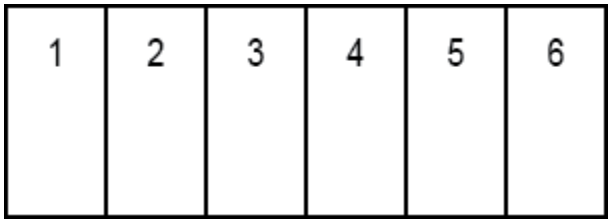
Single-wide, half-height	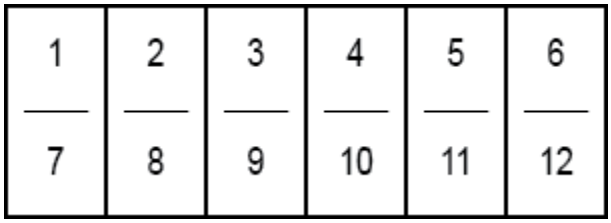
Single-wide, mixed-height	
Double-wide, full-height	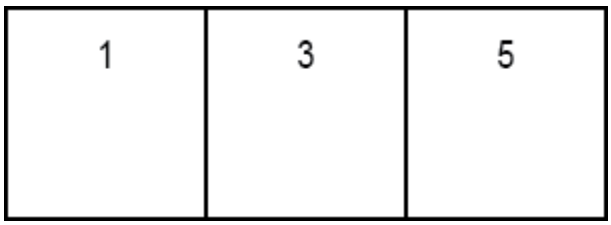

Device bay type	Device bay numbering
Double-wide, half-height	
Double-wide, mixed-height	

Subtopics

Device bay partitions

Device bay partitions

Vertical frame partitions

There are two vertical partitions between device bays in the frame. These nonremovable partitions provide structural integrity to the frame as well as mechanical attach points for the horizontal shelf that divide a full-height bay into two half-height bays.

Up to six full-height device modules can be installed in a frame.

Figure 1. Vertical partitions

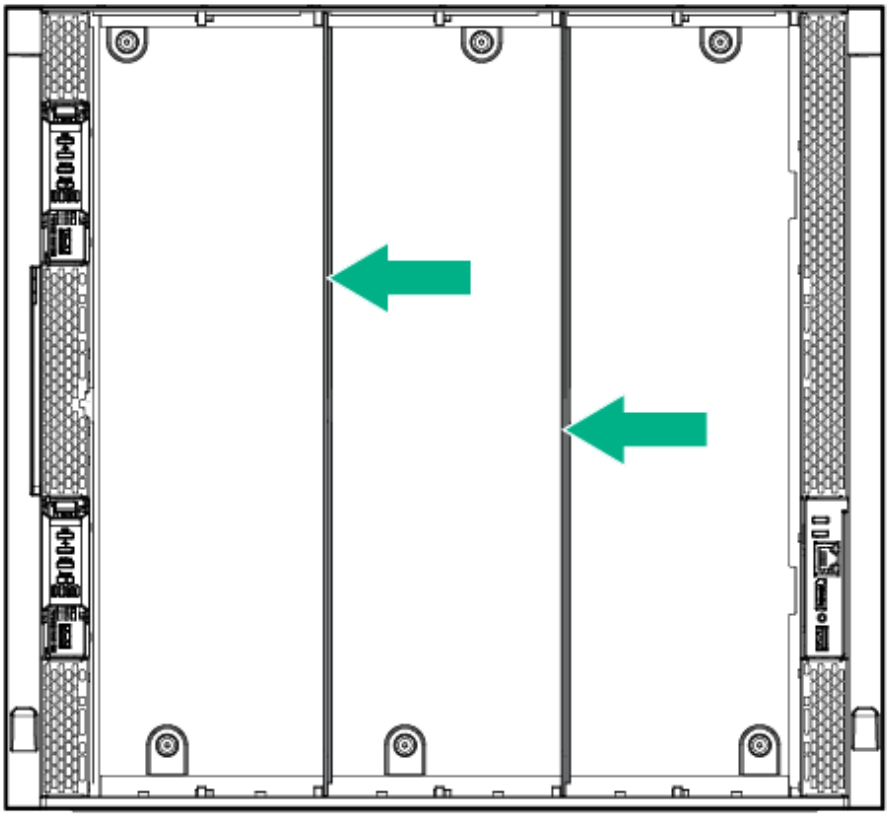

Horizontal frame partitions

The horizontal frame partitions are removable shelves that divide a full-height device bay into a half-height device bay.

Up to 12 half-height device modules can be installed in a frame.

Figure 2. Horizontal partitions

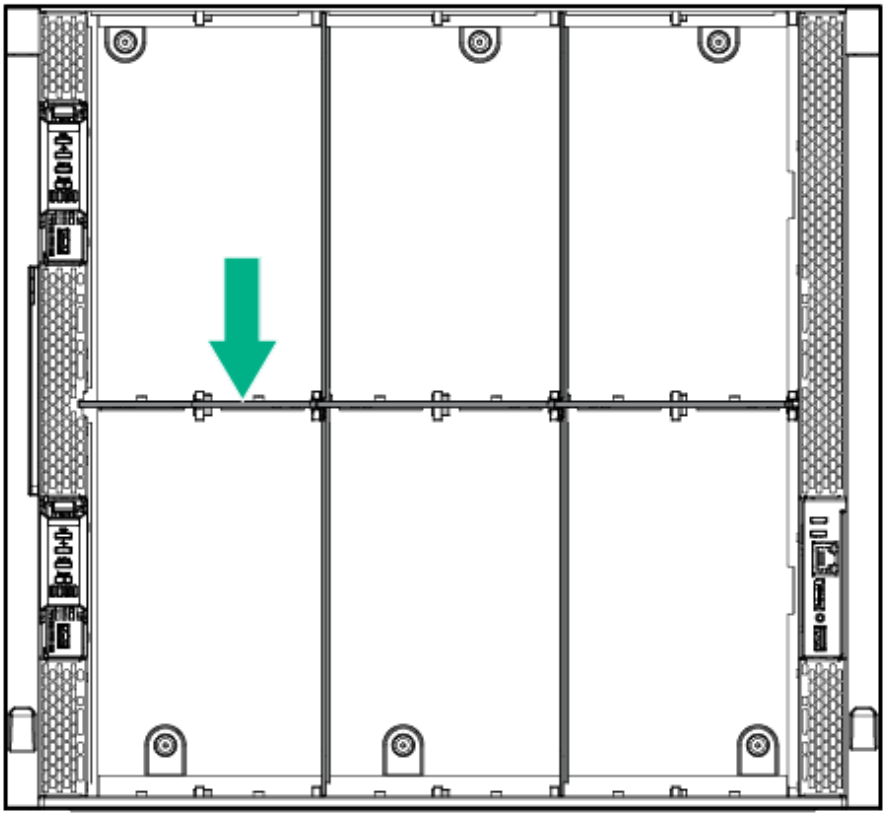

An optional horizontal half shelf can be installed between bay 1 and bay 7 to enable those bays to be used by half-height device modules when a full-height module is installed in bay 2.

Figure 3. Optional horizontal half-shelf

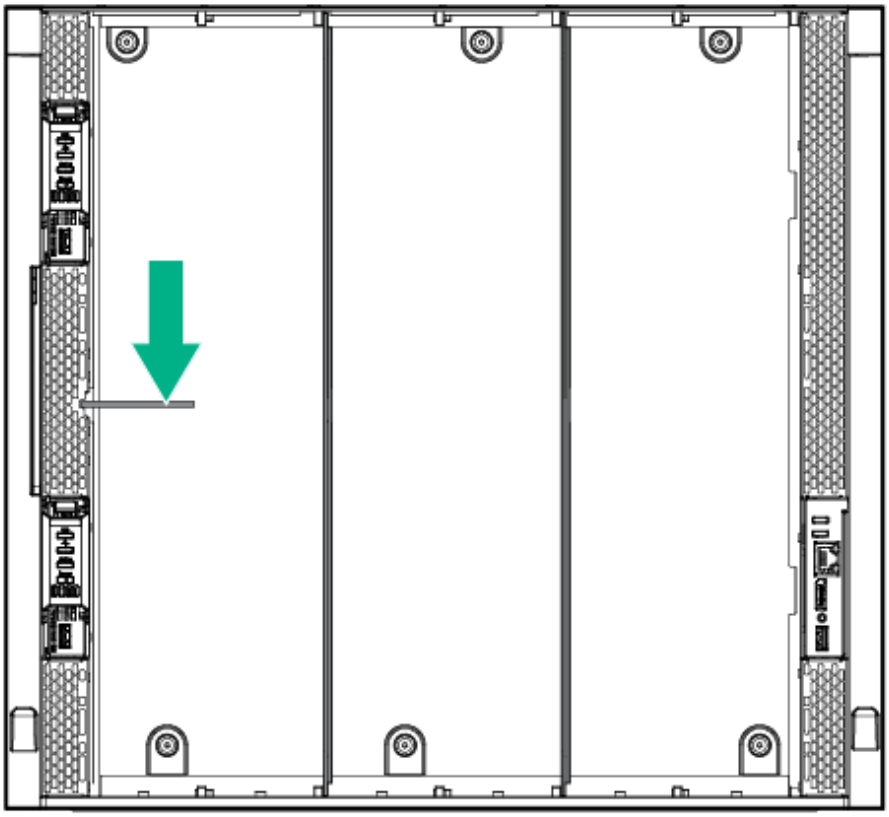

Front panel components

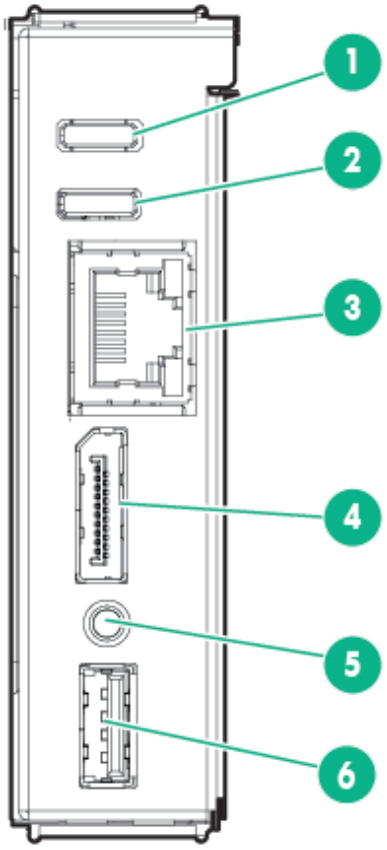

Item	Description	Function
1	UID / LED button	Toggles the frame UID on or off. When turned on, the UID LED on th e active frame link module (FLM) also turns on. This allows identific ation of the frame from either the front or rear and identifies the act ive FLM.
2	Frame Health LED	Indicates the highest severity health status of all components withi n the frame. • Solid green—Normal operation • Flashing amber—Warning • Flashing red—Critical error To resolve critical errors and warnings, connect to HPE OneView or to the HPE Synergy Console.
3	Laptop port	Provides single laptop access to the frame link module using an RJ -45 Ethernet 100BASE-TX connection.

Item	Description	Function
4	Monitor port	Provides connectivity for a monitor or an active monitor port ada pter to access the HPE Synergy Console. **NOTE:** Passive monitor port adapters are not supported. See the ma nufacturer specifications for adapter details.
5	Reset button	Provides two functions: • Resets the Active frame link module - momentary press. • Factory resets both frame link modules - press and hold until UI D LED flashes blue. **NOTE** The reset button does not reset any other compone nt in the frame.
6	USB	Provides a connection for supported USB devices such as a keyboa rd or mouse for HPE Synergy Console use. To connect multiple devi ces, a USB hub (not included) is required.

Appliance module LEDs and components

Appliance module LEDs and components are the same for both an HPE Synergy Composer (1st gen) and an HPE Synergy Image Streamer. The HPE Synergy Composer2 looks slightly different but has the same LED and components on the front panel.

The following figure shows an HPE Synergy Image Streamer on the left and an HPE Synergy Composer2 on the right:

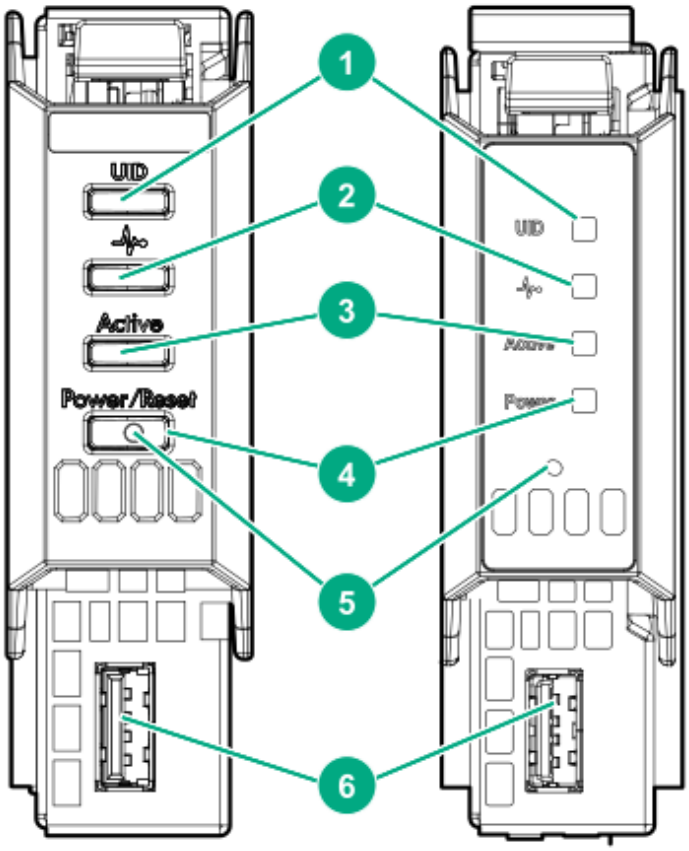

Item	Description	Function
1	UID LED	• Solid blue — Illuminates to locate the appliance module. • Flashing blue — Indicates appliance module firmware update. Do not power off or remove appliance module when the UID LED is flashing.
2	Health LED	Indicates the health of the appliance module. • Solid green — Normal operation • Flashing amber — Warning • Flashing red — Critical error The Health LED provides health status of the appliance module. If the Health LED indicates a warning or a critical error, connect to the HPE Synergy Console to troubleshoot.
3	Activity LED	Indicates which appliance module is active.

Item	Description	Function
		• Off — Indicates that the appliance module is the standby in a Highly Available configuration or HPE OneView is in an error state. • Solid green — Indicates that the appliance module is active. • Flashing green — Indicates that the reset button has been pressed and held for greater than 10 seconds, which initiates a reimaging of the appliance module. The active LED does not continue to flash green during the reimaging process.
4	Power LED	Indicates power to the appliance module. • Off — No power. Verify that the appliance module is fully inserted into the frame link module. • Flashing amber — The appliance module is initializing. • Solid amber — The appliance module is powered off. • Solid green — The appliance module is powered on.
5	Reset button	Using an applicator such as a paper clip, press the recessed button to reset the appliance module. • Press and release — Resets the appliance module. • Press and hold until activity LED is flashing green — Initiates reimaging of the appliance module from files on the USB flash drive plugged into the appliance module.
6	USB port	USB 2.0/3.0 port for connecting a USB drive to flash a USB recovery image.

Subtopics

Appliance bay numbering

Appliance bay numbering

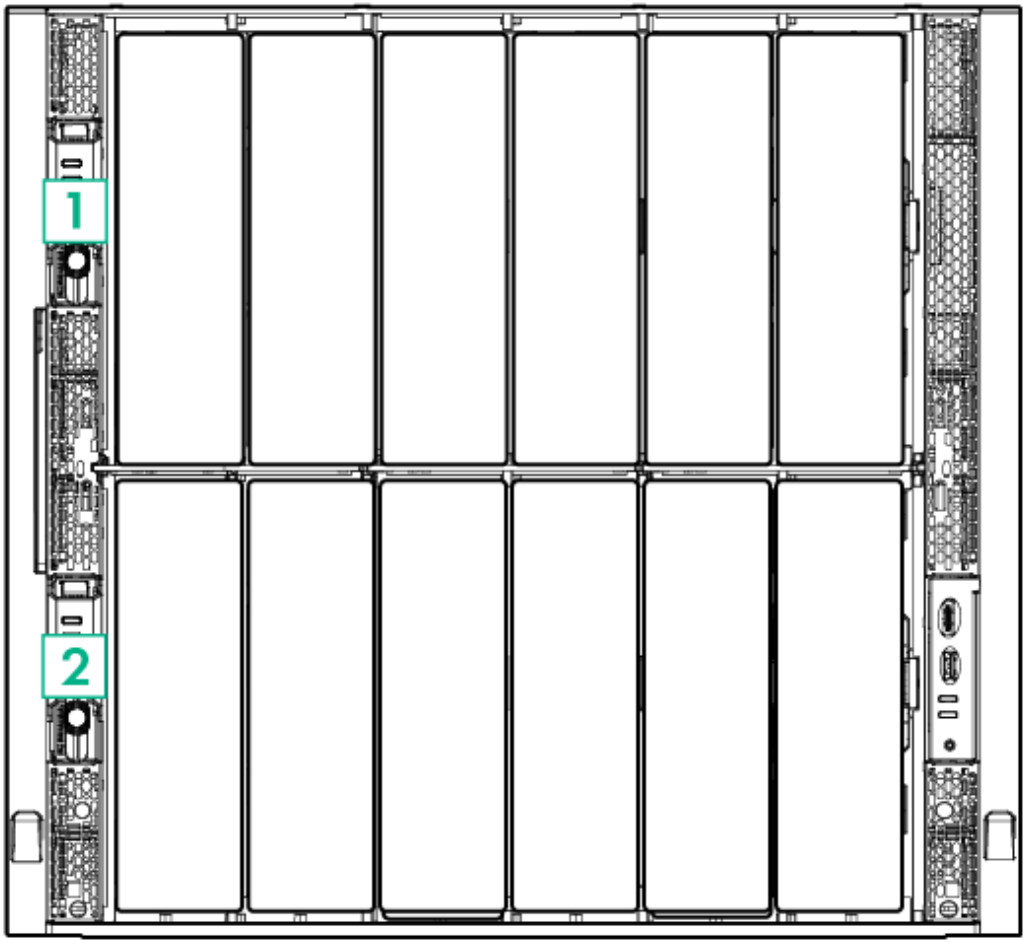

Compute module LEDs and buttons

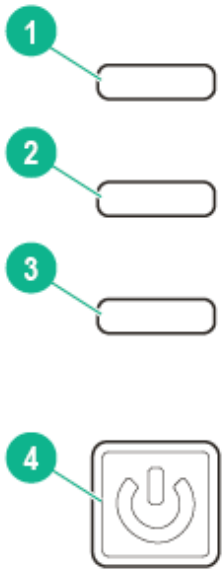

Item	Description	Status
1	UID LED	Solid blue = Activated Flashing blue (1 Hz/cycle per sec) = Remote management or firmware upgrade in progress Off = Deactivated
2	Health status LED	Solid green = Normal Flashing green (1 Hz/cycle per sec) = HPE iLO is rebooting Flashing amber = System degraded Flashing red (1 Hz/cycle per sec) = System critical
3	Mezzanine NIC status LED	Solid green= Link on any Mezzanine NIC Flashing green= Activity on any Mezzanine NIC Off = No link or activity on any Mezzanine NIC

Item	Description	Status
4	Power On/Standby button and system power LED	Solid green = System on Flashing green (1 Hz/cycle per sec) = Performing power on sequence Solid amber = System in standby Off = No power present [1]

[1] If all other LEDs are off, then no power is present to the compute module. If the health LED is flashing green while the system power LED is off indicates that the Power On/Standby button service is initializing or that an iLO reboot is in progress. Facility power is not present, power cord is not attached, no power supplies are installed, power supply failure has occurred, or the power button cable is disconnected.

Subtopics

System power LED definitions
NVDIMM LED identification

System power LED definitions

The system power LED is located on the compute module Power On/Standby button.

System power LED	Definition
Off	No power present
Solid amber	System is in standby
Flashing green (1 Hz/cycle per sec)	Performing power on sequence
Solid green	System on

NVDIMM LED identification

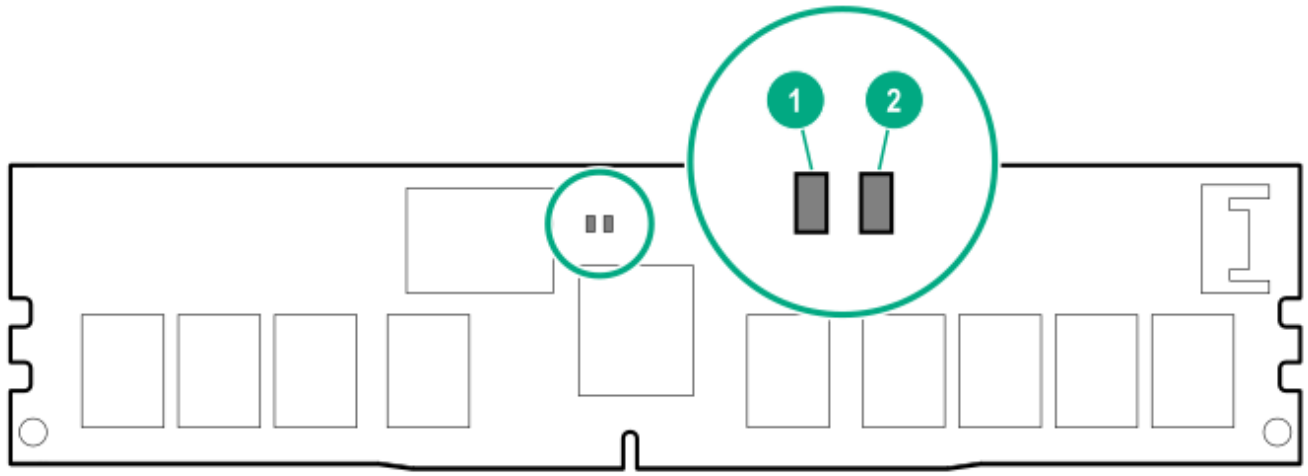

Item	LED description	LED color
1	Power LED	Green
2	Function LED	Blue

Subtopics

NVDIMM-N LED combinations
NVDIMM Function LED patterns

NVDIMM-N LED combinations

State	Definition	NVDIMM-N Power LED (green)	NVDIMM-N Function LED (blue)
0	AC power is on (12V rail) but the NVM controller is not working or not ready.	On	Off
1	AC power is on (12V rail) and the NVM controller is ready.	On	On
2	AC power is off or the battery is off (12V rail off).	Off	Off

State	Definition	NVDIMM-N Power LED (green)	NVDIMM-N Function LED (blue)
3	AC power is on (12V rail) or the battery is on (12V rail) and the NVDIMM-N is active (backup and restore).	On	Flashing

NVDIMM Function LED patterns

For the purpose of this table, the NVDIMM-N LED operates as follows:

- Solid indicates that the LED remains in the on state.
- Flashing indicates that the LED is on for 2 seconds and off for 1 second.
- Fast-flashing indicates that the LED is on for 300 ms and off for 300 ms.

State	Definition	NVDIMM-N Function LED
0	The restore operation is in progress.	Flashing
1	The restore operation is successful.	Solid or On
2	Erase is in progress.	Flashing
3	The erase operation is successful.	Solid or On
4	The NVDIMM-N is armed, and the NVDIMM-N is in normal operation.	Solid or On
5	The save operation is in progress.	Flashing
6	The NVDIMM-N finished saving and battery is still turned on (12 V still powered).	Solid or On
7	The NVDIMM-N has an internal error or a firmware update is in progress. For more information about an NVDIMM-N internal error, see the IML.	Fast-flashing

Storage module LEDs

The front panel and LED layout shown in the following illustration is an example. Depending on your specific model, the LEDs might be different.

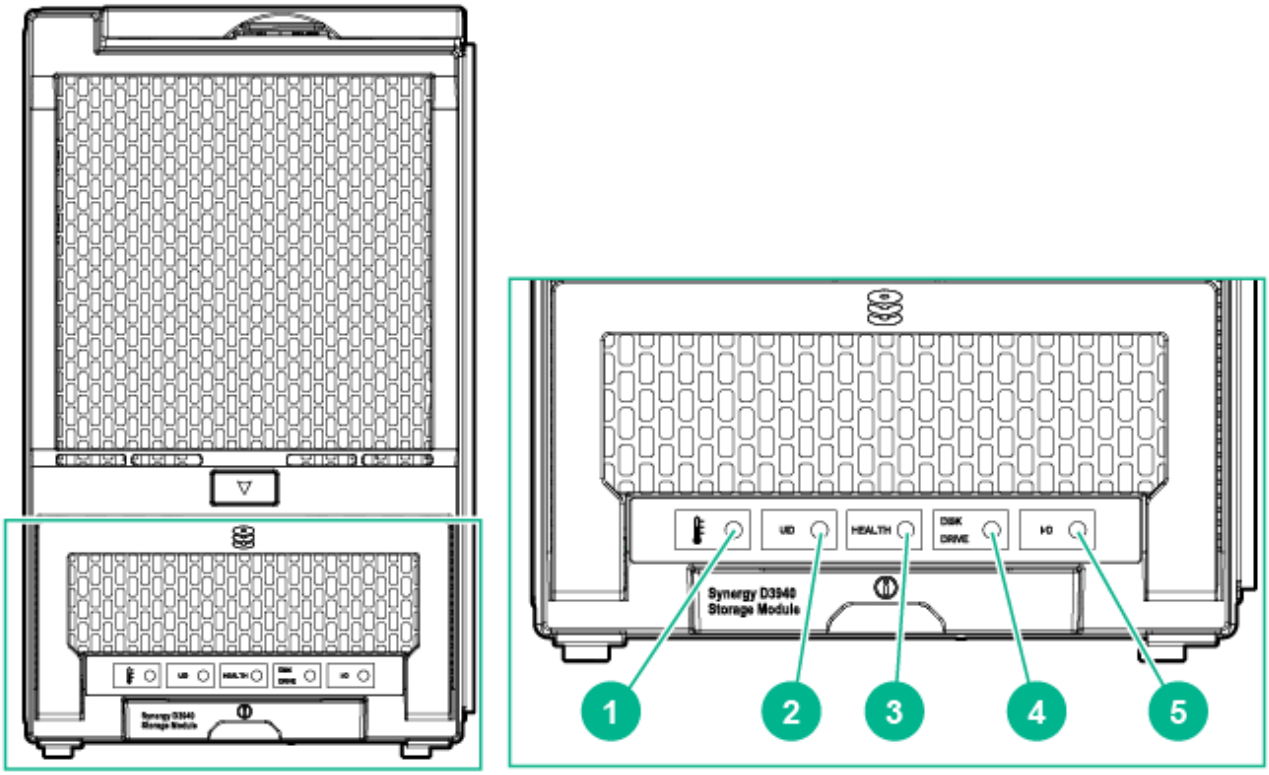

Item	LED	Status	Definition
1	Drawer status [1]	Solid green	Drive drawer is closed
		Flashing green	Drive drawer is open
		Flashing amber	Thermal warning, close t he drive drawer
2	UID	Solid blue	One or more drives are being located
		Flashing blue	Firmware flash in progres s
		Off	No drives are being l ocated
3	Health status	Green	Normal operation
		Flashing amber	Degraded condition
		Flashing red	Critical condition
4	Drive status (in priority o rder)	Solid amber	One or more drives failed

Item	LED	Status	Definition
		Flashing amber	One or more drives are predicted to fail
		Flashing green	One or more drives are rebuilding or transforming
		Solid green	One or more drives are members of a logical drive
		Off	No drives are configured by a RAID controller
5	Drawer power	Green	Storage module is in use, do not remove
		Off	Storage module is not in use, safe to remove

[1] The drive drawer must be closed within five minutes after it is opened.

Frame rear components

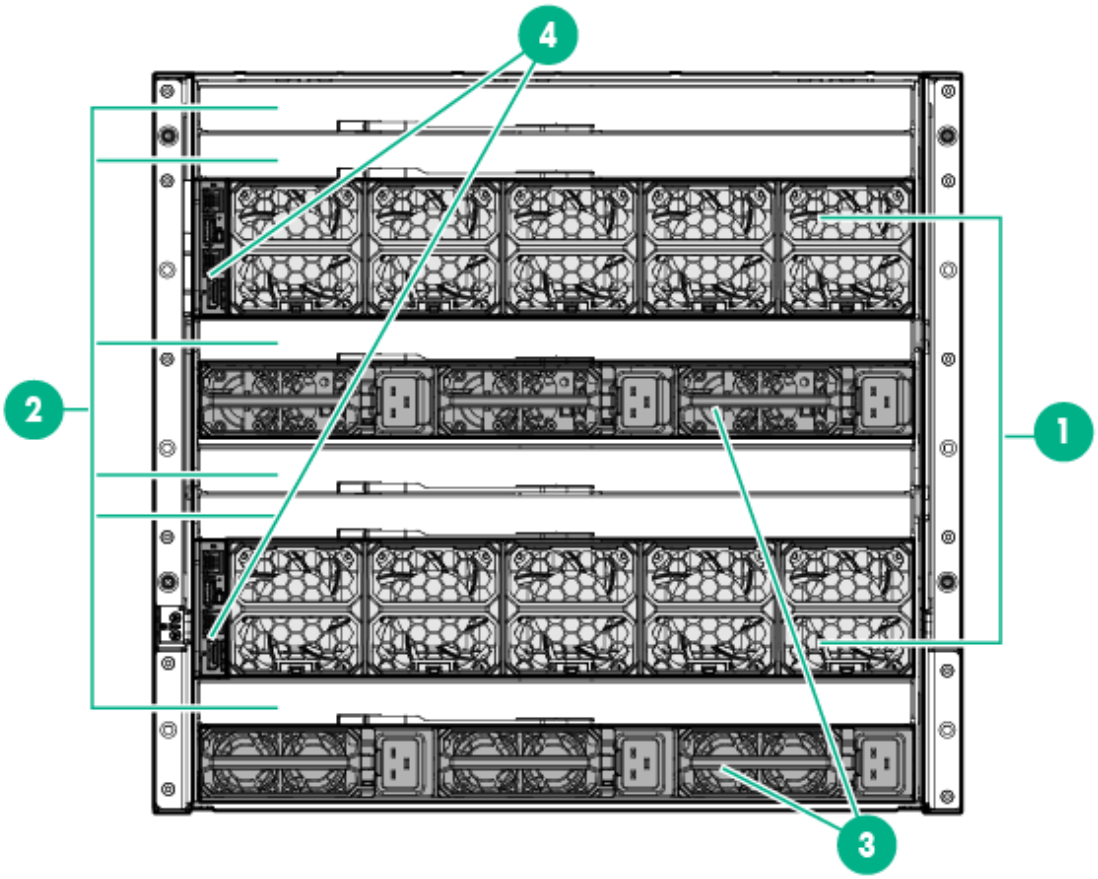

Item	Description
1	Fans (10)
2	Interconnect modules (up to 6)
3	Power supplies (6) shown or (12)
4	Frame link modules (2)

Subtopics

Rear component bay numbering
Rear component bay numbering with flex slot power supplies
HPE Synergy 4-Port Frame Link Module components and LEDs
HPE Synergy Frame Link Module components and LEDs
Power supply LED
Flex slot power supply LED
Fan LED
HPE Synergy 10Gb Interconnect Link Module LEDs and buttons
HPE Synergy 10Gb Interconnect Module interconnect link port
HPE Synergy 20Gb Interconnect Link Module LEDs and buttons
HPE Synergy 20Gb Interconnect Link Module interconnect link ports
HPE Synergy 50Gb Interconnect Link Module LEDs and buttons
HPE Synergy 50Gb Interconnect Link Module interconnect link ports
HPE Virtual Connect SE 100Gb F32 Module for HPE Synergy LEDs and buttons
HPE Virtual Connect SE 100Gb F32 Module for HPE Synergy components
HPE Virtual Connect SE 40Gb F8 Module for HPE Synergy LEDs and buttons
HPE Virtual Connect SE 40Gb F8 Module for HPE Synergy components
HPE Synergy 40Gb F8 Switch Module LEDs and buttons
HPE Synergy 40Gb F8 Switch Module components
Mellanox SH2200 Switch Module for HPE Synergy LEDs and components

Rear component bay numbering

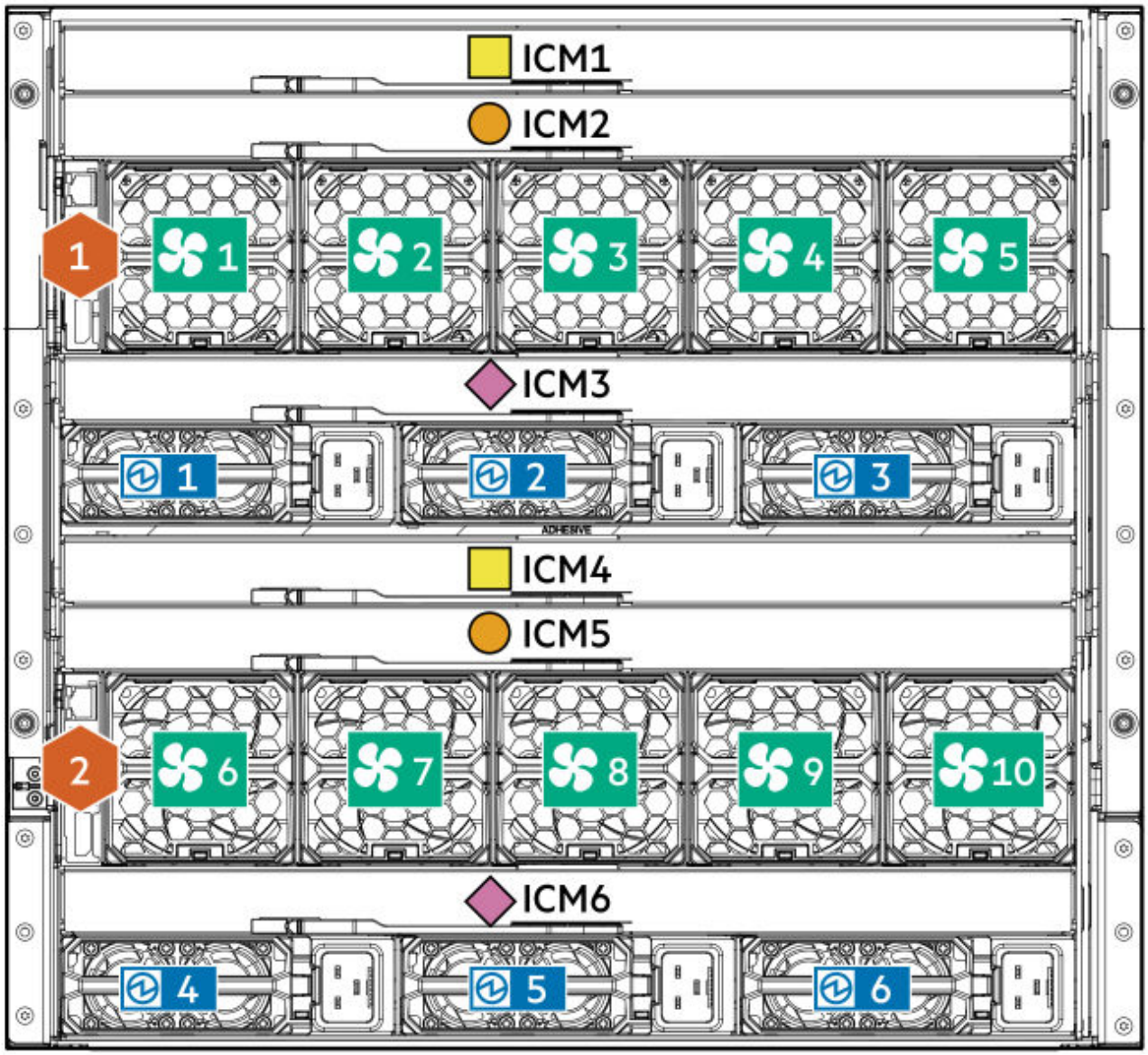

Components	Bays	Labels
Frame link modules	1 and 2	
Interconnect modules These interconnect modules are redun dant pairs on fabric 1.	1 and 4	
Interconnect modules	2 and 5	

Components	Bays	Labels
These interconnect modules are redundant pairs on fabric 2.		
Interconnect modules These interconnect modules are redundant pairs on fabric 3.	3 and 6	
Fans	1 through 10	
Power supplies	1 through 6	

Rear component bay numbering with flex slot power supplies

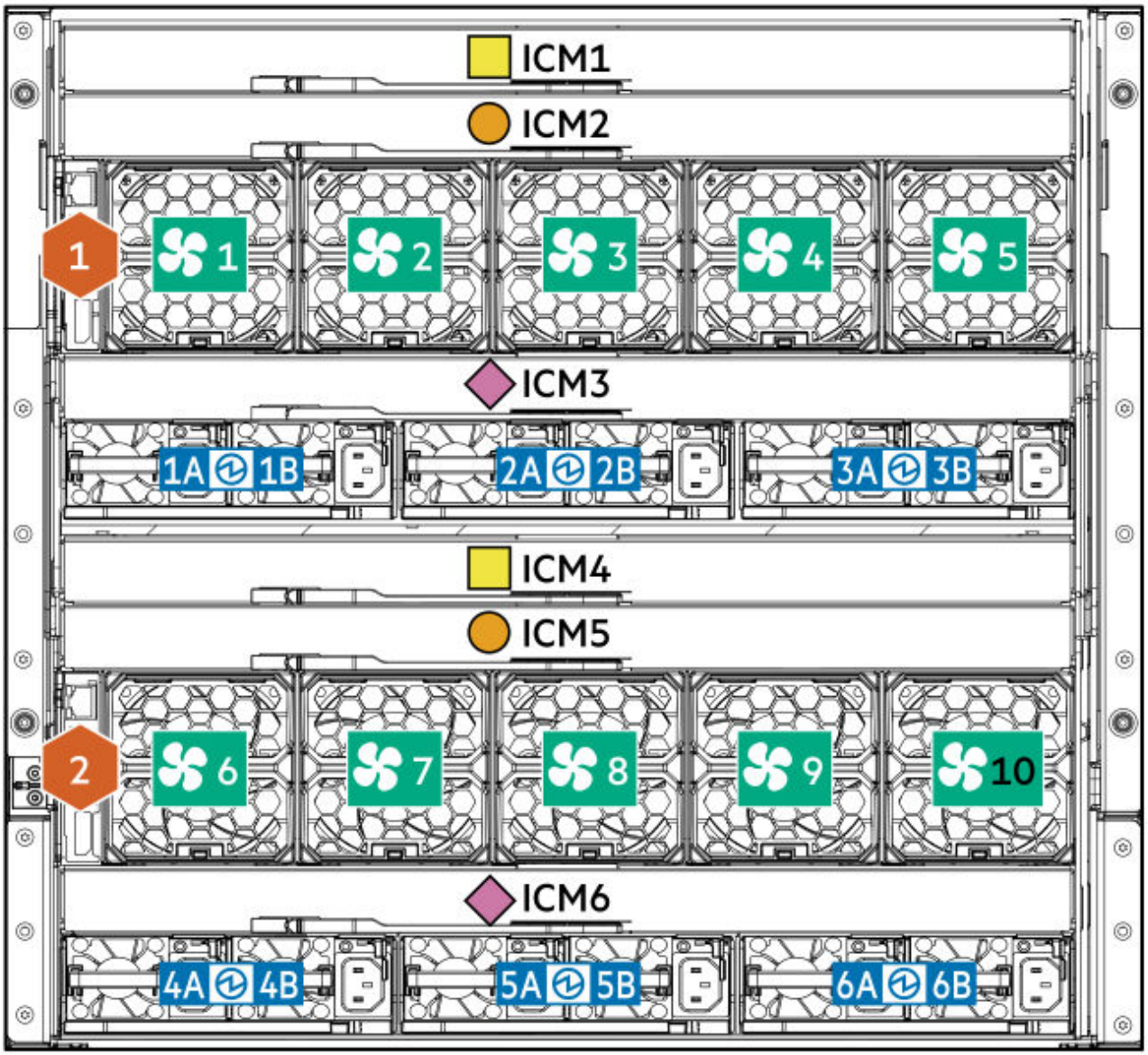

Components	Bays	Labels
Power supplies (1A to 6B)	1 - 6	

HPE Synergy 4-Port Frame Link Module components and LEDs

NOTE

HPE Synergy 4-Port Frame Link Modules require supported SFP+ DAC cables or SFP+ transceivers for cabling. For more information, see the product QuickSpecs on the **Hewlett Packard Enterprise website**.

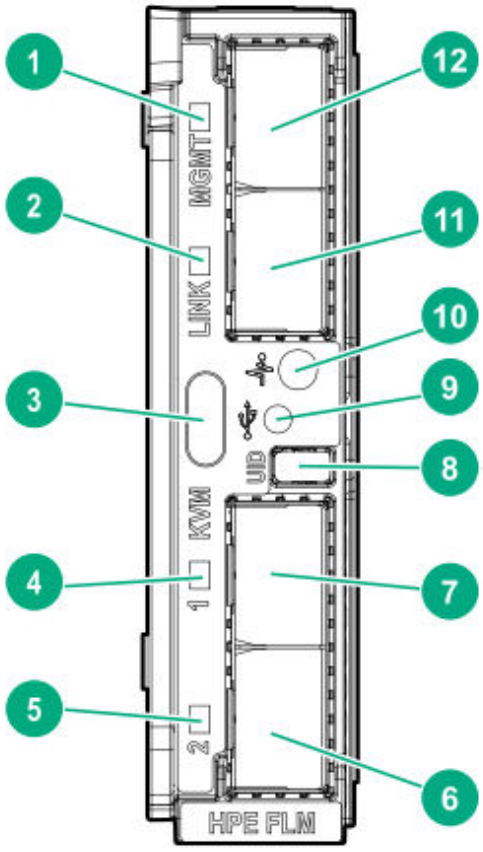

Item	Description	Function
1	MGMT port activity LED	Reports MGMT port activity: • Flashing green = Activity on the MGMT port • Off = No activity on the MGMT port
2	LINK port activity LED	Reports LINK port activity: • Flashing green = Activity on the LINK port

Item	Description	Function
		• Off = No activity on the LINK port
3	KVM port	**NOTE** Connection to the KVM port requires an HPE Synergy 4-Port Frame Link Module USB Adapter. **NOTE** Supports storage devices that are USB 2.0 compatible. When an HPE Synergy 4-Port Frame Link Module USB Adapter is installed, the HPE Synergy 4-Port Frame Link Module: • Allows connection to the frame using a supported USB device. Devices include a keyboard or mouse for connecting to the HPE Synergy Console. To connect multiple devices, a USB hub (not included) is required. • Allows connection to the frame using a monitor device or an active monitor port adapter. **NOTE** Passive monitor port adapters are not supported. See the manufacturer specifications for adapter details. Used for performing a USB recovery frame link module firmware update.
4	Appliance port 1 connectivity LED	Reserved for future use.
5	Appliance port 2 connectivity LED	Reserved for future use.
6	Appliance port 2	Reserved for future use.
7	Appliance port 1	Reserved for future use.
8	UID button / LED	Toggles the UID LED on or off. • Solid blue = Activated • Off = Deactivated

Item	Description	Function
		• Flashing blue = Firmware upgrade is in progress on the frame link module. When turned on, the frame UID LED on the front panel also turns on. This synchronization allows identification of the frame from the front or rear. Do not remove either frame link module while the UID LED is flashing.
9	USB adapter thumbscrew connection	For securing an HPE Synergy 4-Port Frame Link Module USB Adapter to the HPE Synergy 4-Port Frame Link Module.
10	Health LED	Provides the health status of the frame link module. • Solid green = Normal operation • Flashing amber = Warning • Flashing red = Critical error If the Health LED indicates a warning or a critical error, connect to HPE OneView or to the HPE Synergy Console for more information and troubleshooting assistance.
11	LINK port	SFP+ connector that provides the following functions: **IMPORTANT** Use supported SFP+ 10GbE DAC cables or transceivers for LINK port connections. For more information, see the product QuickSpecs on the **Hewlett Packard Enterprise website**. • Provides high availability management network connectivity between: ◦ LINK ports on two frame link modules in the same frame for a single frame configuration ◦ Frame link modules in different frames as part of a management network ring in a multiframe configuration • Provides management ring (frame link topology) connectivity for automatic frame discovery by HPE OneView.
12	MGMT port	SFP+ connector that provides the following functions: **IMPORTANT**

Item	Description	Function
		Use supported SFP+ DAC cables or transceivers for MGMT port connections. For more information, see the product QuickSpecs on the **Hewlett Packard Enterprise website**. **IMPORTANT** The transceiver or cable used must match the port speed of the switch used for management network connectivity. • Provides a management uplink to the management network. • 10GbE or 1GbE based on the cable or transceiver used.

HPE Synergy Frame Link Module components and LEDs

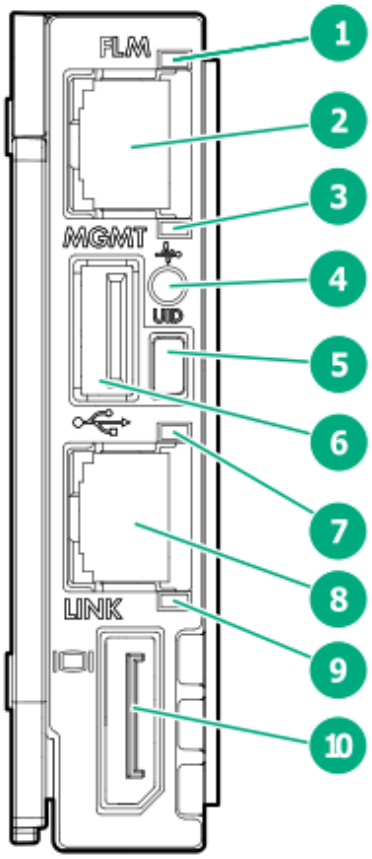

Item	Description	Function
1	MGMT port activity LED	Reports MGMT port activity: • Flashing green = Activity on the MGMT port • Off = No activity on the MGMT port
2	MGMT port	A 10GBASE-T RJ45 connector that provides the following functions: • Provides a management uplink to the management network. • Automatically negotiates speed to 10GbE or 1GbE based on the connection. • Provides a data connection to the data network when an Image Streamer management appliance is installed in the frame.
3	MGMT port connectivity LED	Reports MGMT port connectivity: • Solid green = MGMT port is connected. • Off = MGMT port is not connected.
4	Health LED	Provides the health status of the frame link module. • Solid green = Normal operation • Flashing amber = Warning • Flashing red = Critical error If the Health LED indicates a warning or a critical error, connect to HPE OneView or to the HPE Synergy Console for more information and troubleshooting assistance.
5	UID button / LED	Toggles the UID LED on or off. • Solid blue = Activated • Off = Deactivated • Flashing blue = Firmware upgrade is in progress on the frame link module. When turned on, the frame UID LED on the front panel also turns on. This allows identification of the frame from the front or rear. Do not remove either frame link module while the UID LED is flashing.
6	USB port	Allows connection to the frame using a supported USB device. Devices include a keyboard or mouse for connecting to the HPE Synergy Console. To connect multiple devices, a USB hub (not included) is required.

Item	Description	Function
		Used for performing a USB recovery frame link module firmware update.
7	LINK port activity LED	Reports LINK port activity: • Flashing green = Activity on the LINK port • Off = No activity on the LINK port
8	LINK port	A 10GBASE-T RJ45 connector that provides two functions: • Provides high-availability management network connectivity between: ◦ LINK ports on two frame link modules in the same frame for a single frame configuration. ◦ Frame link modules in different frames as part of a management network ring in a multiframe configuration. • Provides management ring (frame link topology) connectivity for automatic frame discovery by HPE OneView.
9	LINK port connectivity LED	Reports LINK port connectivity: • Solid green = LINK port is connected. • Off = LINK port is not connected.
10	Monitor port	Allows connection to the frame using a monitor device or an active monitor port adapter. **NOTE** Passive monitor port adapters are not supported. See the manufacturer specifications for adapter details.

Power supply LED

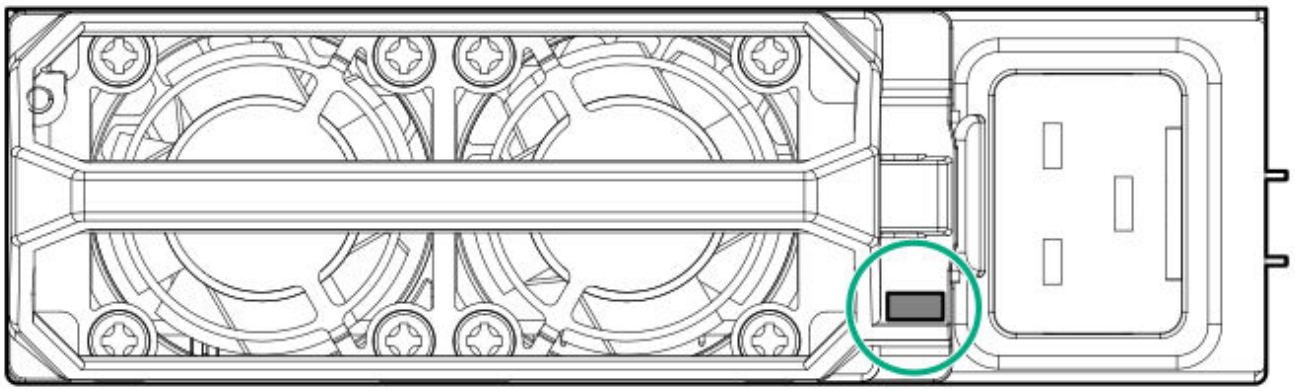

Power LED	Condition
Off	No input power to the power supply or power supply failure. Connect to the HPE Synergy console and check for power supply error messages.
Solid green	Normal operation
Flashing amber	Warning. Connect to HPE OneView Hardware Setup to troubleshoot.

Flex slot power supply LED

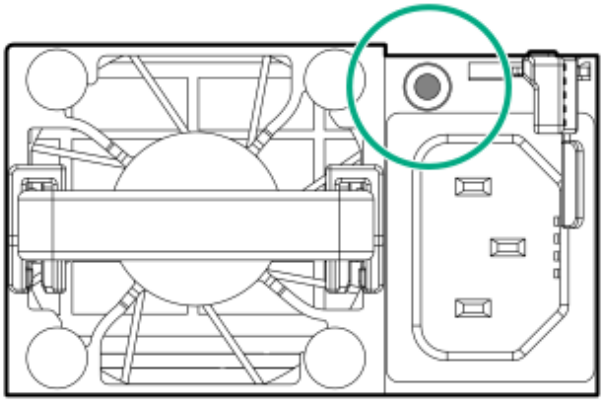

Power LED	Condition
Off	No input power to the power supply or power supply failure. Connect to the HPE Synergy console and check for power supply error messages.
Solid green	Normal operation
Flashing green	Normal operation associated with special functions.

Fan LED

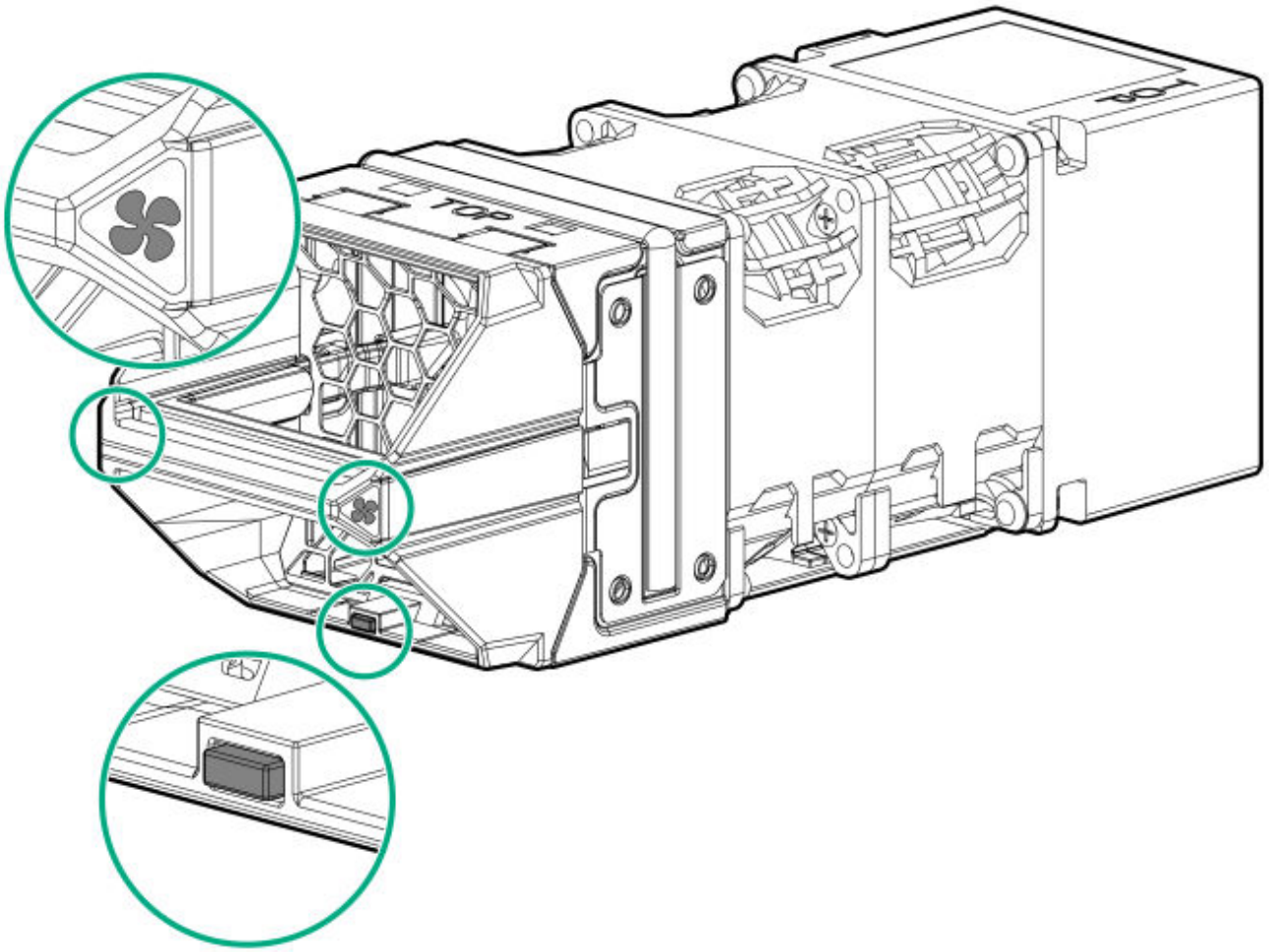

LEDs are the same for all type of HPE Synergy 12000 Frame fans. The fan symbol in the handle of the fan identifies the fan as a HPE Synergy 12000 High Capacity Fan.

LED color	Fan status
Solid green	Normal operation
Flashing red	Critical. Connect to HPE OneView Hardware Setup to troubleshoot.

NOTE

The High Capacity Fan can be identified by the fan image in the ends of the handle.

NOTE

Mixing different types of fans in a frame is not supported..

HPE Synergy 10Gb Interconnect Link Module LEDs and buttons

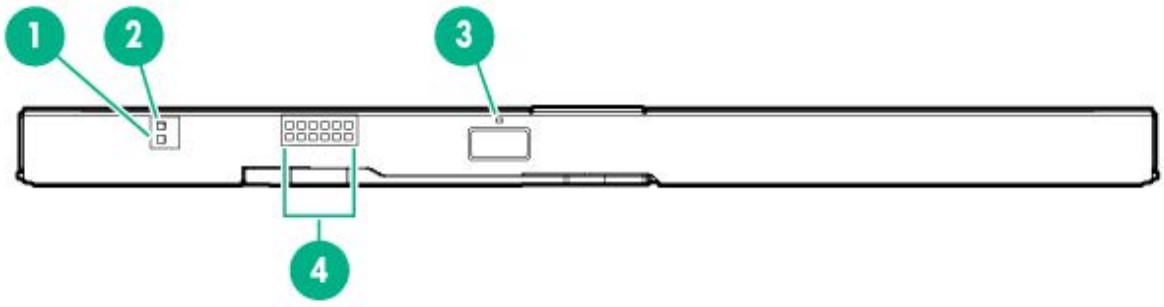

Item	Description	Status
1	Health LED	Solid green = Normal Solid amber = No power present Flashing amber = Module degraded Solid red = Installation alignment error.*

Item	Description	Status
2	UID button/LED	Solid blue = Activated by OneView Off = Deactivated
3	Interconnect link port LEDs	Solid green = Linked Solid red = Error condition
4	Server link LEDs	Solid green = 10Gb link

* Remove and then reinstall the module.

HPE Synergy 10Gb Interconnect Module interconnect link port

Use an interconnect link cable when linking port L1 to a master interconnect module.

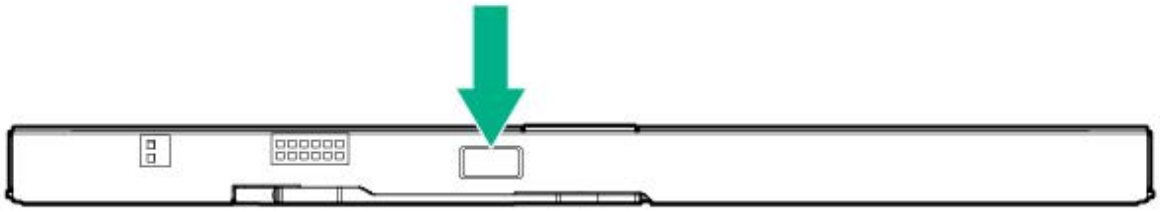

HPE Synergy 20Gb Interconnect Link Module LEDs and buttons

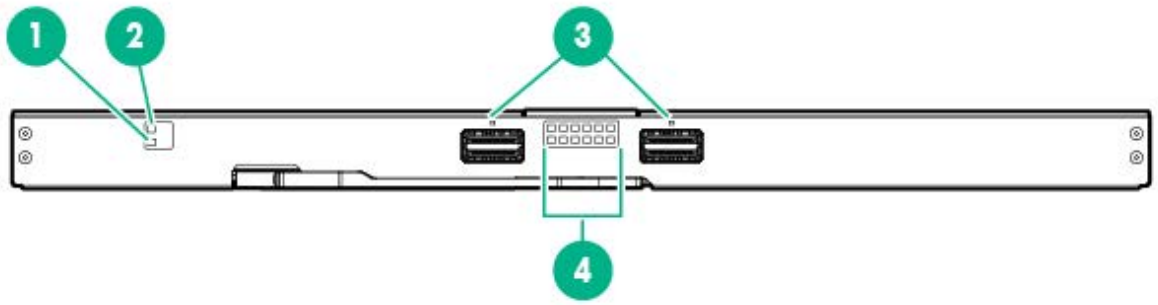

Item	Description	Status
1	Health LED	Solid green = Normal Solid amber = No power present Flashing amber = Module degraded Solid red = Installation alignment error. *
2	UID button/LED	Solid blue = Activated by OneView Off = Deactivated
3	Interconnect link port LEDs	Solid green = Linked Solid red = Error condition
4	Server link LEDs	Solid green = 10Gb link Solid amber = 20Gb link

* Remove and then reinstall the module.

HPE Synergy 20Gb Interconnect Link Module interconnect link ports

Use an interconnect link cable when linking ports L1 or L2 to a master interconnect module.



HPE Synergy 50Gb Interconnect Link Module LEDs and buttons

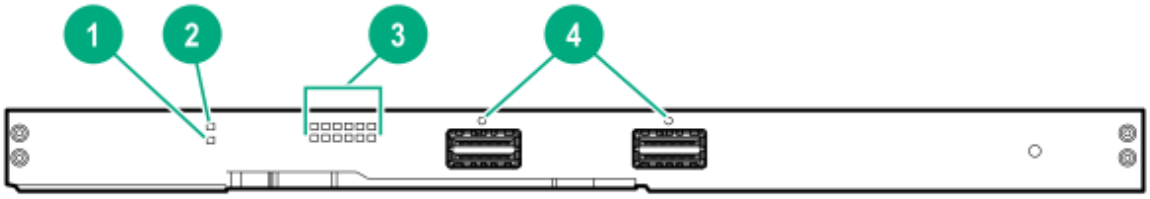

Item	Description	Status
1	Health LED	Solid green = Normal Off = No power present Flashing amber = A fault condition exists
2	UID LED	Solid blue = Maintenance is required

Item	Description	Status
3	Server link LEDs	Solid amber = 25Gb link Solid orange = 50Gb link Off = No link
4	Interconnect link port LEDs	Solid green = Port connected from the HPE Synergy 50Gb Interconnect Link Module to HPE Virtual Connect SE 100Gb F32 Module. Solid red = An error condition exists Off = Port not connected from the HPE Synergy 50Gb Interconnect Link Module to HPE Virtual Connect SE 100Gb F32 Module

NOTE

The new version of the HPE Synergy 50Gb Interconnect Link Module is functionally equivalent to the old HPE Synergy 50Gb Interconnect and they can operate together within the same environment.

HPE Synergy 50Gb Interconnect Link Module interconnect link ports

Use an interconnect link cable when linking ports L1 or L2 to a master interconnect module.

NOTE

If you are running 25 Gb speeds, you only need one cable. If you are running 50 Gb speeds, you must connect two cables. If you are connecting two cables, you must populate L1 first.



HPE Virtual Connect SE 100Gb F32 Module for HPE Synergy LEDs and buttons

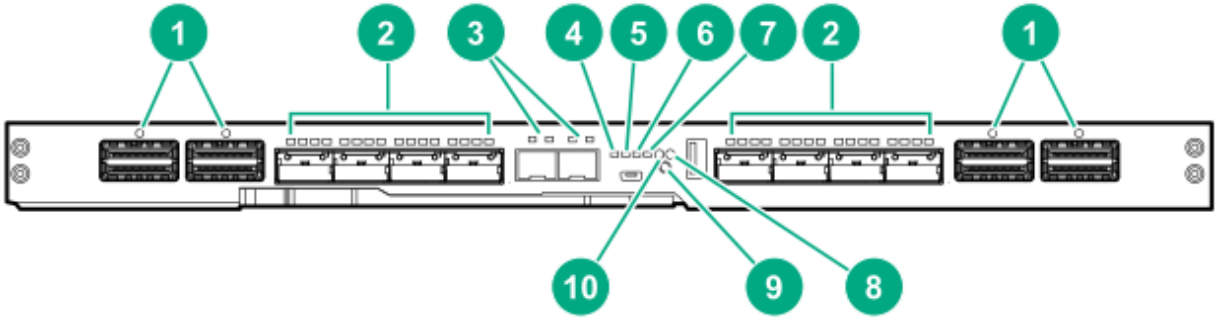

Item	Description	Status
1	Interconnect link port LEDs	Solid green = Linked Solid red = Error detected [1]. Off = No link
2	QSFP28 uplink port LEDs	If the port is in 40GbE or 100GbE mode, only the leftmost LED lights up when linked. The four LEDs above each port correspond to the 10/25GbE or 8Gb/16Gb/32Gb FC channels of the port. The LEDs display one of four modes:

Item	Description	Status
		Ethernet ID mode: • Solid green = The port is configured as an Uplink port. • Solid orange = The port is configured as a Stacking Link port. • Solid magenta = Configured as a Mirror to port. • Off = The port is not configured as an Ethernet port. PID mode: • Solid green = The port is configured for Ethernet. • Solid orange = The port is configured for Fibre Channel. • Solid red = error. • Off = The port is not configured. Link/Activity mode: • Solid green = ◦ 10Gb Ethernet link without activity • Flashing green = ◦ 10Gb Ethernet activity • Solid orange = ◦ 25Gb Ethernet link without activity ◦ 8Gb FC link without activity • Flashing orange = ◦ 25Gb Ethernet link with activity ◦ 8Gb FC link with activity • Solid magenta = ◦ 40Gb Ethernet link without activity ◦ 16Gb FC link without activity • Flashing magenta = ◦ 40Gb Ethernet link with activity ◦ 16Gb FC link with activity • Solid cyan = ◦ 100Gb Ethernet link without activity ◦ 32Gb FC link without activity • Flashing cyan =

Item	Description	Status
		◦ 100Gb Ethernet link with activity ◦ 32Gb FC link with activity • Off = No link or not configured Fibre Channel (FC) ID mode: • Solid green = Logged into Attached Switch. • Solid orange = Not logged into Attached Switch. • Off = The port is not configured as an FC port. To switch between the LED modes, press the Mode button.
3	SFP+ Image Streamer port LEDs	**Left LED** Link/Activity mode: • Off = No Link • Solid green = Ethernet linked at 10Gb PID: • Off = Not configured • Solid blue = Port ID • Solid green = Configured for Ethernet • Solid red = Error Ethernet: • Off = Not Ethernet • Solid green = Configured for Ethernet Fibre Channel: • Always off **Right LED** Link/Activity mode: • Off = No activity • Flashing green = Activity at 10Gb PID: • Always off Ethernet:

Item	Description	Status
		• Always off Fibre Channel: • Always off
4	Fibre Channel (FC) mode LED	Solid green = FC mode is selected.
5	Ethernet mode LED	Solid green = Ethernet mode is selected.
6	PID mode LED	Solid green = PID mode is selected.
7	Link/Activity mode LED	Solid green = Link/Activity mode is selected.
8	Health LED	Solid green = Normal Flashing amber = There is a fault condition Flashing red = Critical fault detected Solid red = No power present
9	Mode button	Press and hold the Mode button for more than 5 seconds to reset. Solid green = There are four LEDs that indicate the operating mod e for the Port LEDs. The operating mode is selected by pressing the Mode button on the front panel. The LED mode state determines w hich of the four Mode LEDs is lit.
10	UID LED	Solid blue = Activated Flashing blue = Firmware upgrade in progress Off = Deactivated

1 See HPE OneView for more information, **HPE OneView docs website**.

2 When illuminated, the QSFP28 port LEDs indicate the port operating states for each of the uplink ports in the selected mode.

HPE Virtual Connect SE 100Gb F32 Module for HPE Synergy components

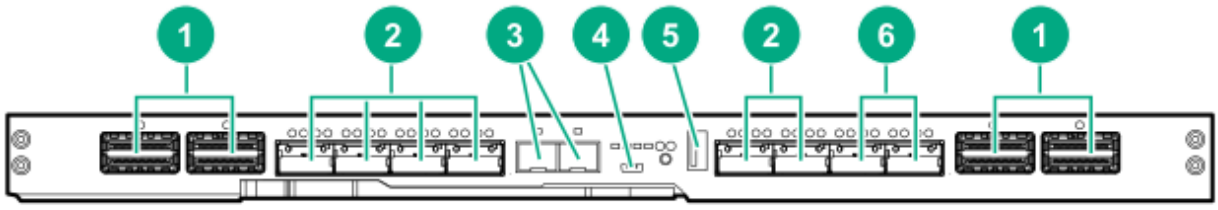

Item	Component	Description
1	Interconnect link ports L1–L4	For linking Interconnect Link modules
2	QSFP28 uplink ports Q1–Q6	10/25/40/100Gb Ethernet or 8/16/32Gb Fibre Channel
3	SFP+ uplink ports X1-X2	For Image Streamer
4	Micro-USB	For Serial Port (115200,8,1)
5	USB	USB 3.0 port (unused)
6	QSFP28 uplink ports Q7–Q8	For Ethernet stacking links

HPE Virtual Connect SE 40Gb F8 Module for HPE Synergy LEDs and buttons

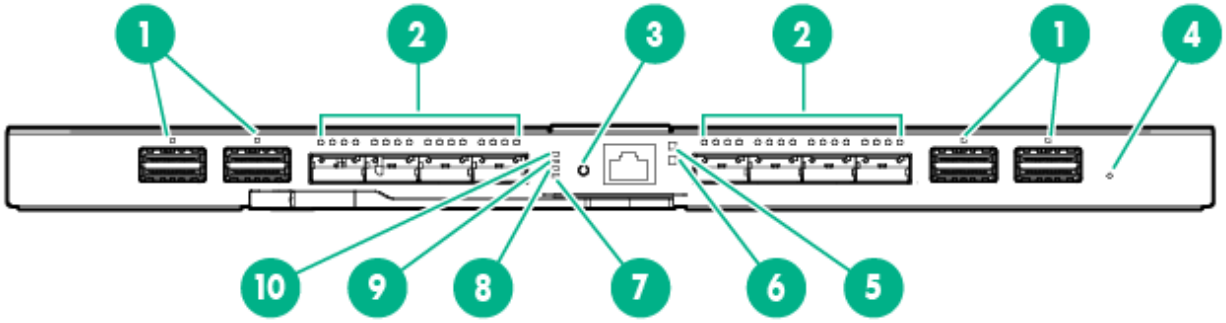

Item	Description	Status
1	Interconnect link port LEDs	Solid green = Linked Solid red = Error detected [1]. Off = No link
2	QSFP+ port LEDs	The four LEDs above each port correspond to the 10GbE or 8Gb FC channels of the port. The LEDs display one of four modes: Ethernet mode: • Solid green = The port is configured as an Ethernet port. • Off = The port is not configured as an Ethernet port. PID mode: • Solid green = The port is configured as an uplink port. • Solid amber = The port is configured as a stacking port. • Solid purple = The port is configured as a mirrored port. • Solid red = Error. • Solid blue = Activated by OneView for port identification. • Off = The port is not configured. Link/Activity mode: • Solid green = 10Gb Ethernet link • Flashing green = 10Gb Ethernet activity • Solid amber = 8Gb FC link

Item	Description	Status
		• Flashing amber = 8Gb FC activity • Solid purple = 40Gb Ethernet link • Flashing purple = 40Gb Ethernet activity • Solid Red = Error • Off = No link Fibre Channel (FC) mode: • Solid green = The port is configured as an FC port. • Off = The port is not configured as an FC port. To switch between the LED modes, press the NEXT button.
3	NEXT button	Selects the QSFP+ port LED mode.
4	Reset pin-hole	Resets the module
5	UID LED/button	Solid blue = Activated Flashing blue = Firmware upgrade in progress Off = Deactivated
6	Health LED	Solid green = Normal Solid amber = No power present Flashing amber = Module degraded Solid red = A physical alignment error exists. [2]
7	Link/Activity mode LED [3]	Solid green = Link/Activity mode is selected.
8	PID mode LED [3]	Solid green = PID mode is selected.
9	Ethernet mode LED [3]	Solid green = Ethernet mode is selected.
10	Fibre Channel (FC) mode LED [3]	Solid green = FC mode is selected.

[1] See OneView (**http://www.hpe.com/info/oneview/docs**)
[2] Remove and then reinstall the module.
[3] When illuminated, QSFP+ port LEDs indicate the port operating states for each of the uplink ports in the selected mode.

HPE Virtual Connect SE 40Gb F8 Module for HPE Synergy components

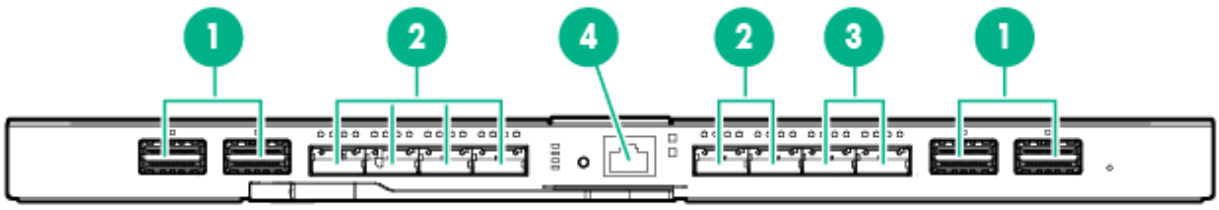

Item	Component	Description
1	Interconnect link ports L 1–L4	For linking satellite modules
2	QSFP+ uplink ports Q1–Q6	40Gb Ethernet or 8Gb Fibre Channel
3	QSFP+ uplink ports Q7–Q8	For stacking links
4	Serial port	For management

HPE Synergy 40Gb F8 Switch Module LEDs and buttons

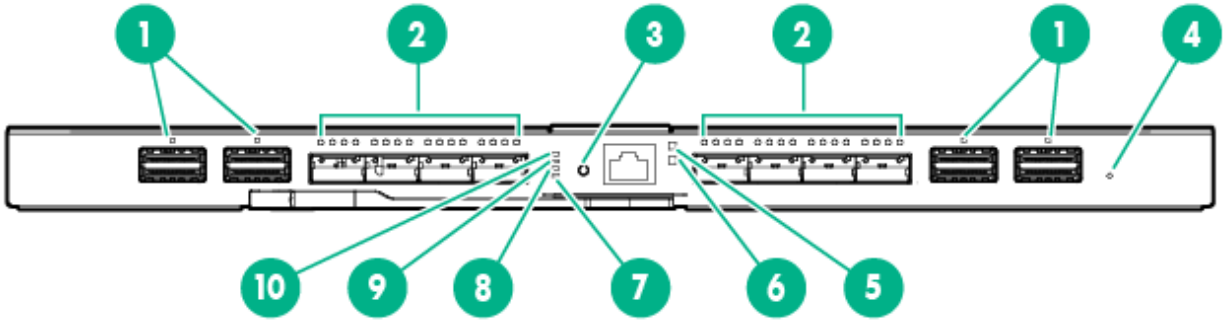

Item	Description	Status
1	Interconnect link port LEDs	Solid green = Linked Solid red = Error detected [1]. Off = No link
2	QSFP+ port LEDs	The four LEDs above each port correspond to the 10GbE or 8Gb FC channels of the port. The LEDs display one of four modes: Ethernet mode: • Solid green = The port is configured as an Ethernet port. • Off = The port is not configured as an Ethernet port. PID mode: • Solid green = The port is configured as an uplink port. • Solid amber = The port is configured as a stacking port. • Solid purple = The port is configured as a mirrored port. • Solid red = Error. • Solid blue = Activated by OneView for port identification. • Off = The port is not configured. Link/Activity mode: • Solid green = 10Gb Ethernet link • Flashing green = 10Gb Ethernet activity • Solid amber = 8Gb FC link

Item	Description	Status
		• Flashing amber = 8Gb FC activity • Solid purple = 40Gb Ethernet link • Flashing purple = 40Gb Ethernet activity • Solid Red = Error • Off = No link Fibre Channel (FC) mode: • Solid green = The port is configured as an FC port. • Off = The port is not configured as an FC port. To switch between the LED modes, press the NEXT button.
3	NEXT button	Selects the QSFP+ port LED mode.
4	Reset pin-hole	Resets the module
5	UID LED/button	Solid blue = Activated Flashing blue = Firmware upgrade in progress Off = Deactivated
6	Health LED	Solid green = Normal Solid amber = No power present Flashing amber = Module degraded Solid red = A physical alignment error exists. [2]
7	Link/Activity mode LED [3]	Solid green = Link/Activity mode is selected.
8	PID mode LED [3]	Solid green = PID mode is selected.
9	Ethernet mode LED [3]	Solid green = Ethernet mode is selected.
10	Fibre Channel (FC) mode LED [3]	Solid green = FC mode is selected.

[1] See OneView (**http://www.hpe.com/info/oneview/docs**)
[2] Remove and then reinstall the module.
[3] When illuminated, QSFP+ port LEDs indicate the port operating states for each of the uplink ports in the selected mode.

HPE Synergy 40Gb F8 Switch Module components

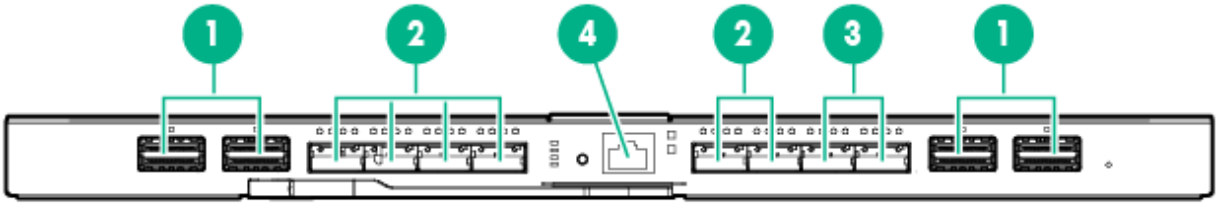

Item	Component	Description
1	Interconnect link ports L1–L4	For linking satellite modules
2	QSFP+ uplink ports Q1–Q6	40Gb Ethernet or 8Gb Fibre Channel
3	QSFP+ uplink ports Q7–Q8	40Gb Ethernet
4	Serial port	For management

Mellanox SH2200 Switch Module for HPE Synergy LEDs and components

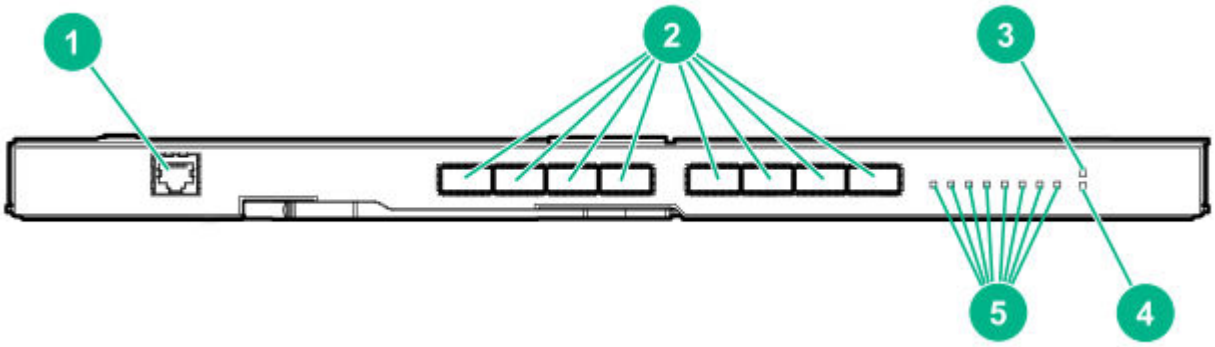

Item	Description
1	**Serial port**
2	**QSFP+ uplink ports (8)**
3	**UID LED** Solid blue = Activated Flashing blue = Firmware upgrade in progress. Off = Deactivated
4	**Health LED** Off = No power present Solid green = Normal Flashing amber = Fault Solid red = CANMIC boot failure
5	**QSFP+ LEDs** Off = Link is down Solid green = Link is active Flashing green = Data activity is proportional to data transfer Flashing orange = Link error

HPE Synergy Cabling

Depending on your HPE Synergy configuration, HPE Synergy requires various types of cabling. To assist with planning and cabling HPE Synergy, the HPE Synergy Cabling Guide provides cabling scenarios and diagrams.

- Management network cabling

  Cabling the management network includes cabling the frame link module LINK ports together to form a management ring (frame link topology) and cabling two frame link module MGMT ports to the management network.

- HPE Synergy Image Streamer cabling

  Cabling for HPE Synergy Image Streamer OS deployment includes management cabling, HPE Synergy Image Streamer cabling, and interconnect cabling. HPE Synergy 12000 frames with HPE Synergy Image Streamer installed use each MGMT port in the frame for OS deployment. When HPE Synergy Image Streamer is installed in a frame, the MGMT ports are automatically dedicated to OS deployment and cannot be used for management network connectivity.

- Interconnect module cabling

  HPE Synergy supports a composable fabric that spans multiple frames and includes primary interconnect modules (switches) and satellite modules (links).

- Power cabling

  HPE Synergy power cabling includes cabling multiple frames for power feed redundant power, cabling power supplies for power feed redundancy, and power cabling for both a single frame and multiple frame configurations.

- HPE Synergy Console cabling

  Direct connections to the HPE Synergy Console are possible by connecting a laptop directly to a frame through the front panel or by connecting KVM to the frame link module.

For more information, see the HPE Synergy Cabling Guide at the Hewlett Packard Enterprise website (**https://www.hpe.com/info/synergy-cabling-guide**).

HPE Synergy documentation resources

The Hewlett Packard Enterprise Support Center provides a comprehensive, one stop location for all HPE Synergy documentation, including installation instructions, maintenance and service guides, best practices, and links to additional resources. It supports filtering to improve findability.

Subtopics

HPE Synergy firmware update resources

HPE Synergy firmware update resources

Several resources are available to assist you with updating firmware for the HPE Synergy solution. The HPE Synergy Software Release Information **site** provides interactive tools for firmware update information. In addition, you can use the HPE Synergy Software Releases - Overview page, available on the site, to access downloads for HPE Synergy software. Additional resources are also available within HPE OneView.

HPE Synergy documentation map

The Hewlett Packard Enterprise Support Center provides access to the HPE Synergy documentation. For quick links to different HPE Synergy document types, see **HPE Synergy Documentation Quick Links**.

In addition, the **HPE Synergy Software Release Information** site provides an interactive resource for software release information.

You can access drivers, manuals, and parts at **Hewlett Packard Enterprise Support Center**.

Software Release Information **HPE Synergy Software Release Information** site, which include release information, such as: • What's new with HPE Synergy releases • Management combinations • HPE Synergy Service Packs (SSPs) • Operating systems • Comparison tools • Useful links	**Managing** • **HPE OneView User Guide for HPE Synergy** • **HPE OneView Best Practices Guide for Deployment and Management** • **HPE Synergy Frame Link Module User Guide**
Planning • **HPE Synergy Migration Guide** • **HPE Synergy 12000 Frame Site Planning Guide**	**Monitoring** • **HPE OneView User Guide for HPE Synergy** • **HPE OneView Global Dashboard User Guide**

- **HPE Synergy Configuration and Compatibility Guide**
- **HPE OneView Support Matrix for HPE Synergy**
- **HPE Synergy Power Management Overview**

Installing hardware

- HPE Synergy Start Here Poster (included with frame)
- Rack Rails Installation Instructions for the HPE Synergy 12000 Frame (included with frame)
- HPE Synergy 12000 Frame Rack Template (included with frame)
- Hood labels
- **HPE Synergy Cabling Guide**
- **HPE OneView User Guide for HPE Synergy**—Quick Start: Initial hardware setup

Maintaining

- Product maintenance and service guides
- **HPE OneView User Guide for HPE Synergy**
- **HPE Synergy Appliances Maintenance and Service Guide for HPE Synergy Composer and HPE Synergy Image Streamer**
- **HPE Synergy Appliances Maintenance and Service Guide for HPE Synergy Composer2**

Configuring for managing and monitoring

- **HPE OneView User Guide for HPE Synergy**
- **HPE OneView API Reference Quick Links**
- **HPE Synergy Software Release Information** site, which includes release information, such as:
  - What's new with HPE Synergy releases
  - Management combinations
  - HPE Synergy Service Packs (SSPs)
  - Operating systems
  - Comparison tools
  - Useful links

Troubleshooting

- **HPE Synergy Troubleshooting Guide for Gen11**
- **HPE Synergy Troubleshooting Guide for Gen9, Gen10, and Gen10 Plus**
- **Integrated Management Log Messages for HPE ProLiant Gen10, Gen10 Plus, and Gen11 servers and HPE Synergy**
- **HPE OneView Alerts User Guide for HPE Synergy**

Specifications

Subtopics

HPE Synergy QuickSpecs

HPE Synergy QuickSpecs

HPE Synergy has system specifications as well as individual product and component specifications. For complete specification information, see the HPE Synergy and individual HPE Synergy product QuickSpecs on the Hewlett Packard Enterprise website (**https://www.hpe.com/info/qs**).

Websites

General websites

Single Point of Connectivity Knowledge (SPOCK) Storage compatibility matrix

https://www.hpe.com/storage/spock

Technical papers and analyst reports

https://www.hpe.com/us/en/resource-library

For additional websites, see Support and other resources.

Support and other resources

Subtopics

Accessing Hewlett Packard Enterprise Support
HPE product registration
Accessing updates
Remote support
Warranty information
Regulatory information
Documentation feedback

Accessing Hewlett Packard Enterprise Support

- For live assistance, go to the Contact Hewlett Packard Enterprise Worldwide website:

  https://www.hpe.com/info/assistance

- To access documentation and support services, go to the Hewlett Packard Enterprise Support Center website:

  https://www.hpe.com/support/hpesc

Information to collect

- Technical support registration number (if applicable)
- Product name, model or version, and serial number
- Operating system name and version
- Firmware version
- Error messages
- Product-specific reports and logs
- Add-on products or components
- Third-party products or components

HPE product registration

To gain the full benefits of the Hewlett Packard Enterprise Support Center and your purchased support services, add your contracts and products to your account on the HPESC.

- When you add your contracts and products, you receive enhanced personalization, workspace alerts, insights through the dashboards, and easier management of your environment.
- You will also receive recommendations and tailored product knowledge to self-solve any issues, as well as streamlined case creation for faster time to resolution when you must create a case.

To learn how to add your contracts and products, see **https://www.hpe.com/info/add-products-contracts**.

Accessing updates

- Some software products provide a mechanism for accessing software updates through the product interface. Review your product documentation to identify the recommended software update method.
- To download product updates:

Hewlett Packard Enterprise Support Center

https://www.hpe.com/support/hpesc

My HPE Software Center

https://www.hpe.com/software/hpesoftwarecenter

- To subscribe to eNewsletters and alerts:

  https://www.hpe.com/support/e-updates

- To view and update your entitlements, and to link your contracts and warranties with your profile, go to the Hewlett Packard Enterprise Support Center **More Information on Access to Support Materials** page:

  https://www.hpe.com/support/AccessToSupportMaterials

> **IMPORTANT**
>
> Access to some updates might require product entitlement when accessed through the Hewlett Packard Enterprise Support Center. You must have an HPE Account set up with relevant entitlements.

Remote support

Remote support is available with supported devices as part of your warranty or contractual support agreement. It provides intelligent event diagnosis, and automatic, secure submission of hardware event notifications to Hewlett Packard Enterprise, which initiates a fast and accurate resolution based on the service level of your product. Hewlett Packard Enterprise strongly recommends that you register your device for remote support.

If your product includes additional remote support details, use search to locate that information.

HPE Get Connected

https://www.hpe.com/services/getconnected

HPE Tech Care Service

https://www.hpe.com/services/techcare

HPE Complete Care Service

https://www.hpe.com/services/completecare

Warranty information

To view the warranty information for your product, see the **warranty check tool**.

Regulatory information

To view the regulatory information for your product, view the Safety and Compliance Information for Server, Storage, Power, Networking, and Rack Products, available at the Hewlett Packard Enterprise Support Center:

https://www.hpe.com/support/Safety-Compliance-EnterpriseProducts

Additional regulatory information

Hewlett Packard Enterprise is committed to providing our customers with information about the chemical substances in our products as needed to comply with legal requirements such as REACH (Regulation EC No 1907/2006 of the European Parliament and the Council). A chemical information report for this product can be found at:

https://www.hpe.com/info/reach

For Hewlett Packard Enterprise product environmental and safety information and compliance data, including RoHS and REACH, see:

https://www.hpe.com/info/ecodata

For Hewlett Packard Enterprise environmental information, including company programs, product recycling, and energy efficiency, see:

https://www.hpe.com/info/environment

Documentation feedback

Hewlett Packard Enterprise is committed to providing documentation that meets your needs. To help us improve the documentation, use the **Feedback** button and icons (at the bottom of an opened document) on the Hewlett Packard Enterprise Support Center portal (**https://www.hpe.com/support/hpesc**) to send any errors, suggestions, or comments. This process captures all document information.