HPE Synergy Configuration and Compatibility Guide

Part Number: 30-4E930FD0-016
Published: September 2026
Edition: 16

HPE Synergy Configuration and Compatibility Guide

Abstract

This guide contains configuration and compatibility requirements for HPE Synergy components. Hewlett Packard Enterprise assumes you are qualified in the servicing of computer equipment and trained in recognizing hazards in products with hazardous energy levels.

Part Number: 30-4E930FD0-016
Published: September 2026
Edition: 16

© Copyright 2016-2026 Hewlett Packard Enterprise Development LP

Notices

The information provided here is subject to change without notice. Hewlett Packard Enterprise's products and services are covered only by the express warranty statements that come with them. This document does not constitute an additional warranty. Hewlett Packard Enterprise is not responsible for any technical or editorial errors or omissions in this document.

Confidential computer software. You must have a valid license from Hewlett Packard Enterprise to possess, use, or copy the software. In accordance with FAR 12.211 and 12.212, Commercial Computer Software, Computer Software Documentation, and Technical Data for Commercial Items are licensed to the U.S. Government under the vendor's standard commercial license.

Links to third-party websites will take you outside of the Hewlett Packard Enterprise website. Hewlett Packard Enterprise has no control over and is not responsible for the information outside the Hewlett Packard Enterprise website.

Table of contents

About this document....5
The configuration and compatibility document....5
Additional configuration and compatibility support documentation for HPE Synergy....5
HPE Synergy terminology....6
HPE Synergy architecture....6
HPE Synergy architecture overview....6
HPE Synergy Gen11 architecture....7
HPE Synergy Gen12 architecture....8
Management architecture....8
About frame link topology (HPE OneView frame management)....12
Primary/Satellite fabric architecture....12
HPE Synergy components configuration....15
HPE Synergy management appliance compatibility....15
Composer compatibility and support....16
HPE Synergy hardware overview....16
Supported racks and rack options....17
HPE Synergy 12000 Frame....17
Frame component minimum requirements....18
Single frame configurations with redundant Composers and only a single frame link module....19
Frame thermal requirements....20
Information pull tabs....20
Frame front components and device bays....23
Device bay numbering....24
Device bay partitions....24
Appliance modules....26
Appliance bay numbering....28
HPE Synergy Composer, HPE Synergy Composer2 and HPE Synergy Composer2 Plus....28
Composer configurations....29
Compute modules....29
Mezzanine port configurations....30
Mezzanine to frame signal routing....32
Frame rear components....33

Rear component bay numbering..... 34
Rear component bay numbering..... 36
HPE Synergy Frame Link Module and HPE Synergy 4-Port Frame Link Module..... 37
HPE Synergy 4-Port Frame Link Module components and LEDs.....39
HPE Synergy Frame Link Module components and LEDs.....43
Frame link module configurations.....46
HPE Synergy Power Supplies.....46
Power supply configurations for flex slot power supplies.....50
Power supply configurations..... 51
Flex slot power supplies best practices..... 52
HPE Synergy Fan..... 52
HPE Synergy Fan guidelines..... 53
Interconnect modules.....54
Virtual Connect primary and satellite pairs.....55
Fibre Channel modules..... 56
Ethernet modules..... 58
Storage modules..... 58
Supported mezzanine options.....58
Interconnect module bay numbering..... 60
Interconnect module configurations..... 61
Interconnect module installation guidelines.....62
Primary interconnect module with interconnect link module configurations..... 63
HPE Synergy Cabling.....64
HPE Synergy documentation..... 64
Specifications..... 65
HPE Synergy QuickSpecs..... 65
Support and other resources..... 65
Accessing Hewlett Packard Enterprise Support.....65
HPE product registration..... 66
Accessing updates.....66
Remote support.....67
Warranty information..... 68
Regulatory information..... 68
Documentation feedback..... 68

About this document

Subtopics

The configuration and compatibility document
Additional configuration and compatibility support documentation for HPE Synergy
HPE Synergy terminology

The configuration and compatibility document

HPE Synergy is the world's first platform architected for **Composable Infrastructure**—built from the ground up to bridge traditional and new IT with the agility, speed, and continuous delivery needed for today's applications. It is composed of various hardware configurations and managed by HPE OneView.

This document includes the following sections:

- HPE Synergy architecture
  Provides an overview of HPE Synergy management and fabric architecture.
- HPE Synergy components configuration
  Contains the detailed component location, numbering, and basic configuration requirements for the hardware components, including the frame, compute modules, storage modules, interconnect modules, and various infrastructure components.
- HPE Synergy Cabling
  Provides examples of different hardware cabling configurations.

Additional configuration and compatibility support documentation for HPE Synergy

The HPE OneView Support Matrix for HPE Synergy is a companion document that provides additional configuration information for HPE Synergy. This document is available on the Hewlett Packard Enterprise website (**https://www.hpe.com/info/synergy-docs**).

HPE Synergy terminology

The terms used for HPE Synergy hardware components in the software tools might be different than the terms used in this document. For example, in the software, a compute module might be called server and a frame might be called enclosure.

For more information about HPE Synergy terminology, see the HPE Synergy Glossary at **https://www.hpe.com/info/synergy-docs**.

HPE Synergy architecture

Subtopics

HPE Synergy architecture overview
HPE Synergy Gen11 architecture
HPE Synergy Gen12 architecture
Management architecture
Primary/Satellite fabric architecture

HPE Synergy architecture overview

HPE Synergy takes the management of IT equipment and the scale at which fabrics are deployed beyond the single enclosure:

- From chassis-based management and cabling to row-based management and optimized cabling
- From chassis-based fabric scale to rack and multi-rack-based fabric scale

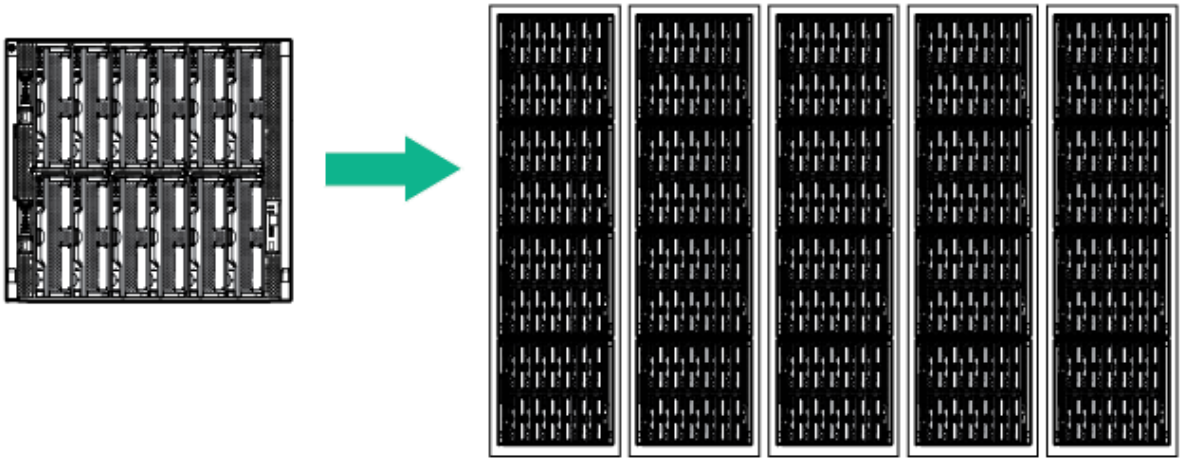

This system design reduces the complexity and cost of deploying and managing a large number of frames full of IT equipment.

HPE Synergy Gen11 architecture

The HPE Synergy Gen11 release includes the following:

- Hardware
  - HPE Synergy 12000 Frame (Gen11 SKU)
  - HPE Synergy Gen11 Compute Module (1 minimum)
  - HPE Synergy 12000 High Capacity Fans (10) - with the Gen11 solution you must fully populate the frame with HPE Synergy 12000 High Capacity Fans
  - 1800-2200W Flex Slot Power Supplies (12)
  - Dual Slot Power Supply Adapters (6)

    NOTE

    Use HPE Synergy Power Advisor to determine the power requirements for your configuration.

  - 6820c 25/50Gb CNA or 4820c 10/20/25Gb CNA
- Software
  - HPE OneView 8.2 and SSP 2023.03.01 (minimum)
  - HPE Synergy Frame Link Module 4.00 firmware (minimum)

HPE Synergy Gen12 architecture

The HPE Synergy Gen12 release includes the following:

- Hardware
  - HPE Synergy Gen12 Compute Module or later (1 minimum)
  - HPE Synergy 12000 Frame (Gen11 SKU)
  - HPE Synergy 12000 High Capacity Fans (10) - must be used in frames with Gen12 compute modules
  - 1800-2200W Flex Slot Power Supplies (12), as required
  - Dual Slot Power Supply Adapters (6), as required

    

    NOTE

    Use HPE Synergy Power Advisor to determine the power requirements for your configuration.

  - HPE Synergy Gen11 & Gen12 6310C 25/50 GB Ethernet Adapter
  - HPE Synergy 7330C 64Gb Fibre Channel Host Bus Adapter, HPE Synergy 5331C 32Gb Fibre Channel Host Bus Adapter
  - OCP Interposer Board and HPE MR416i-o Gen11 Controller (used only with Gen12 compute modules, specifically in Mezzanine slot 2)
- Gen12 software requirements
  - HPE OneView 10.0 and SSP 2025.05.01 (minimum)
  - HPE Synergy Frame Link Module 5.02 firmware (minimum)

Management architecture

HPE Synergy Composer powered by HPE OneView manages HPE Synergy. Data centers can have multiple HPE Synergy systems, each managed by an HPE Synergy Composer pair. Composers are installed in pairs to create a highly available management environment.

Connectivity for the management appliance bays is redundantly routed internally to each frame link module in the frame. For connectivity to the management network, each frame link module supports a 10GBASE-T MGMT port with autonegotiation for 10Gb or 1Gb connections. Frame link modules provide redundant management network uplink connectivity (using multiple MGMT port uplinks) and redundant connectivity between linked enclosures (using multiple LINK ports). The frame link module manages uplink and linked enclosure connectivity automatically without user configuration nor external rack switch configuration. However, all external rack switches must be IEEE 802.1D compliant.

HPE Synergy supports the following configurations:

- Primary management ring
- Remote enclosure management ring

Important concepts

- There are two generations of HPE Synergy Composer appliances. The HPE Synergy Composer 1st Gen appliance appears in documentation as HPE Synergy Composer appliance. There are two second generation HPE Synergy appliances; HPE Synergy Composer 2 and HPE Synergy Composer2 Plus. Then when commenting on both generations of HPE Synergy Composer appliances the term used is composer.
- A ring configuration of frames connected through the frame link module reduces cabling complexity and external rack switch port usage.
- The management ring also enables automatic discovery of the connected frames, significantly simplifying initial setup.
- For the maximum number of frames supported by the Composer, see the HPE OneView Support Matrix for HPE Synergy (**https://www.hpe.com/info/synergy-docs**). The maximum number includes all the frames in primary and remote frame link topologies.
- Figure: Individual frame management network connections example is an example of MGMT port cabling to a rack switch. Figure: Ring configuration of frames connected through the frame link module LINK port example is an example of management ring cabling of LINK ports. For more examples of management network cabling, see the HPE Synergy Cabling Guide (**https://www.hpe.com/info/synergy-docs**).
- Each frame in an HPE OneView Logical Enclosure must be within a primary or remote management ring.
- Multiple different Logical Enclosures can be within the primary or remote management ring.

Figure 1. Individual frame management network connections example

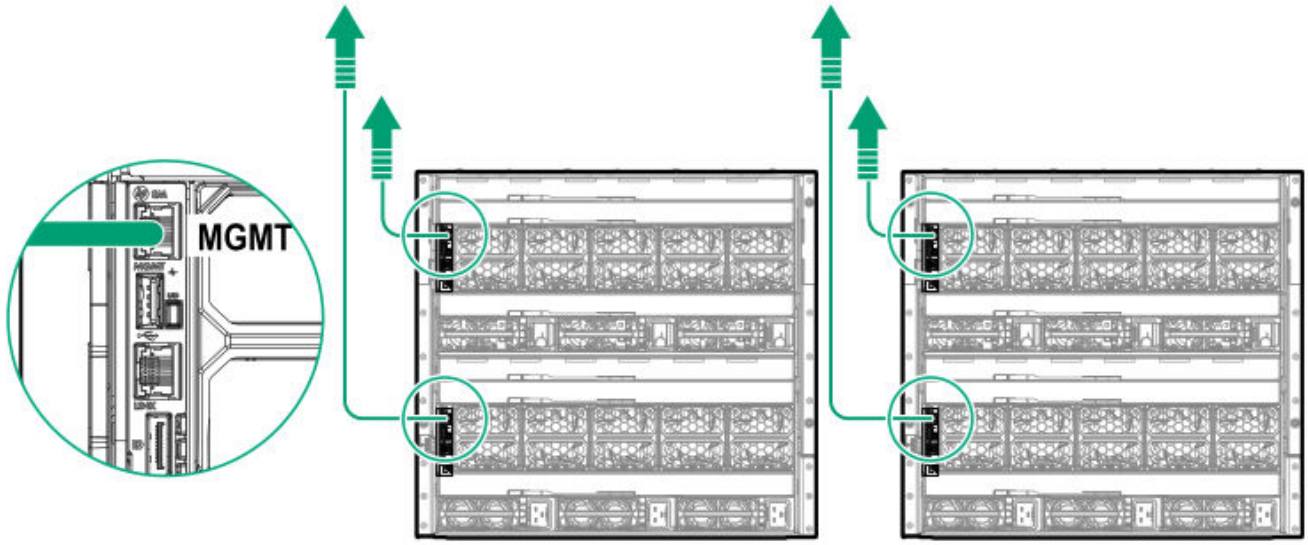

Figure 2. Ring configuration of frames connected through the frame link module LINK port example

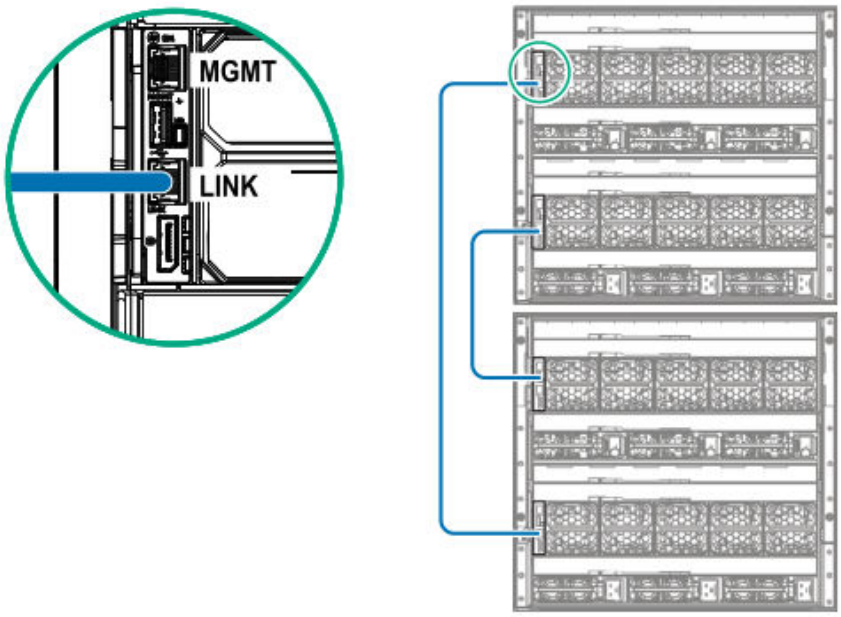

Primary management ring

The primary management ring is one or more HPE Synergy frames that include both Composers - connected in a management ring between all the frame link module LINK ports. For proper management ring frame link topology redundancy, a single HPE Synergy frame must contain two frame link modules and a cable connecting the LINK ports between the two frame link modules. This LINK connection compliance must exist when the single frame contains two Composers.

In HPE OneView, a management ring configuration is called a frame link topology.

The primary management ring provides private management Ethernet connections between the Composers (and Image Streamers, if present) and all devices, interconnects, and frame link modules. Loss of any single management link cable or frame link module still allows full management connectivity to any frame in the management ring. Frame link module LINK ports MUST only be connected to another frame link module LINK port - never to a switch.

Redundant connectivity of the primary management ring to an external rack switch is provided by connecting two or more frame link module MGMT ports to the rack switch. The primary management ring requires the MGMT port of the frame link module in the same bay as a Composer be connected to the rack switch. Additional MGMT ports in other frames in the primary management ring can also be connected to the rack switch for management. To prevent a management network loop, only one MGMT ports in the management ring will be active. When the active MGMT port loses connectivity, one of the other MGMT ports is automatically activated.

Remote enclosure management ring

In HPE OneView, HPE Synergy frames that are not connected to the primary management ring are called Remote Enclosures. If the data center cabling practices do not permit direct rack-to-rack cabling, the management ring cabling may be completed using patch panels. When using patch panels, the maximum distance of any one of the management ring cables between frame link module LINK ports must be less than 100 meters. Cabling examples using this method are provided in the HPE Synergy Cabling Guide.

Remote Enclosure management rings include one or more frames connected in a management ring. Remote Enclosure management rings must be manually imported into HPE OneView.

From the **Hardware Setup** page in HPE OneView, use the **Actions > Add Remote Enclosure**. This action requires the IPv6 address of one of the frame link modules in a Remote Enclosure management ring. This frame link module IPv6 address can be found by connecting to the HPE Synergy Console as described in the HPE Synergy 12000 Frame Setup and Installation Guide. For information on this click **https://www.hpe.com/info/synergy-docs** here. Click here for This Add Remote Enclosure action will add all the frames and installed devices in the Remote Enclosure management ring. Repeat this action for every separate Remote Enclosure management ring.

Subtopics

About frame link topology (HPE OneView frame management)

About frame link topology (HPE OneView frame management)

HPE OneView manages all frames in a management ring. In HPE OneView, the management ring is referred to as a frame link topology. A management ring that contains HPE Synergy Composers is referred to as a primary frame link topology. A management ring that does not contain HPE Synergy Composers is referred to as a remote frame link topology.

> **NOTE**
> For the maximum number of frames supported in a frame link topology, see the HPE OneView Support Matrix for HPE Synergy (**https://www.hpe.com/info/synergy-docs**). The maximum number includes all the frames in primary and remote frame link topologies.

- An HPE Synergy frame link topology is visual representation of a set of HPE Synergy frames that are physically connected by cabling frame link module LINK ports between each frame.
- HPE OneView reports frame link topology on the selected Enclosure screen for all frames linked to that frame.

  For more information on HPE OneView for Synergy, see the HPE OneView Help for HPE Synergy (**https://www.hpe.com/info/synergy-docs**).

Primary/Satellite fabric architecture

HPE Synergy supports both traditional single frame-based networking as well as a multiframe, single-switch architecture. The multiframe architecture is referred to as a Primary/Satellite fabric.

A Primary/Satellite fabric configuration consists of a single fabric switch or Virtual Connect module (“Primary”) whose ports span across multiple frames through ("Satellite") interconnect modules.

Logically, all compute modules in a multiframe Primary/Satellite configuration are directly connected to the primary switch or primary Virtual Connect module.

Figure 1. Logical view of a primary/satellite configuration

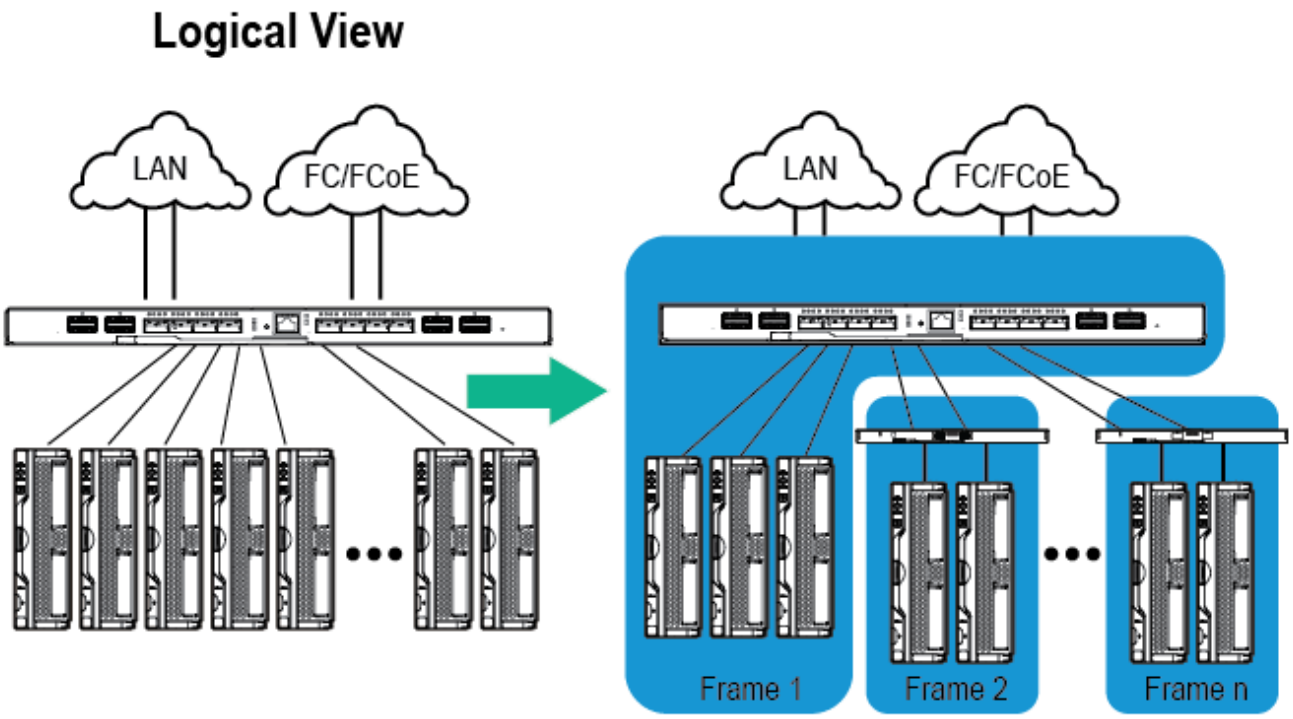

Physically, one of the frames in the multiframe configuration houses the primary module, while the other frames contain the satellite modules. The frame supporting a primary module is referred to as a primary frame and a frame supporting a satellite is referred to as a satellite frame.

Figure 2. Physical view of a multiframe primary/satellite configuration

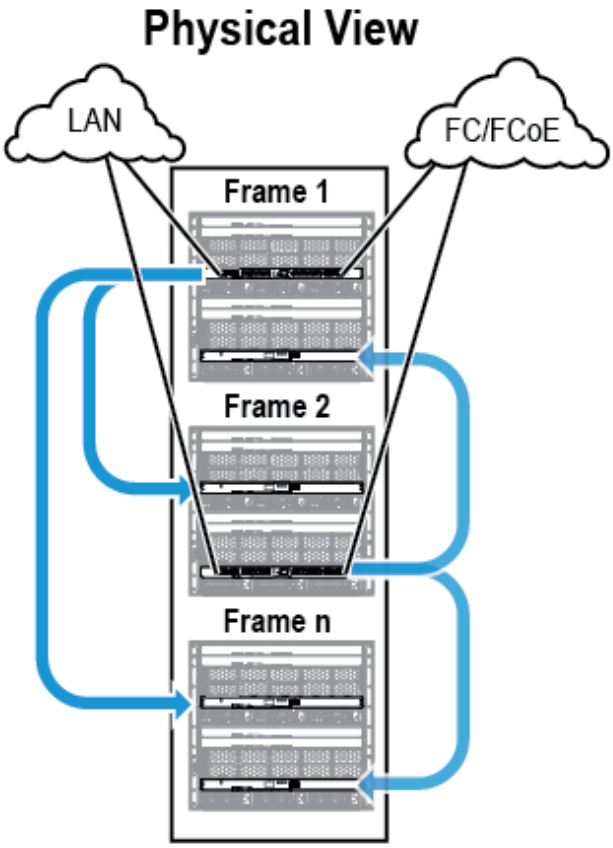

The satellite module physically and electrically transfers the fabric signals carried by the cabling from the primary module to the satellite frame midplane. There is no switching in the satellite modules.

Depending on the data rate of the fabric, a Primary/Satellite fabric configuration enables network scaling from the following:

- A single frame to up to three frames using any of the following:
  - HPE Synergy 50Gb Interconnect Link Module—Using the HPE Virtual Connect SE 100Gb F32 Module for HPE Synergy in 50G mode (two cable configuration).
  - HPE Synergy 50Gb Interconnect Link Module—Using the HPE Virtual Connect SE 100Gb F32 Module for HPE Synergy in 25G mode (one cable configuration).
  - HPE Synergy 10Gb Interconnect Link Module—Using the HPE Virtual Connect SE 40Gb F8 Module for HPE Synergy.
  - HPE Synergy 20Gb Interconnect Link Module—Using the HPE Virtual Connect SE 40Gb F8 Module for HPE Synergy.
- Five frames using either of the following:

- HPE Synergy 50Gb Interconnect Link Module—Using the HPE Virtual Connect SE 100Gb F32 Module for HPE Synergy in 25G mode (single cable configuration).
- HPE Synergy 10Gb Interconnect Link Module—Using the HPE Virtual Connect SE 40Gb F8 Module for HPE Synergy.

HPE Synergy components configuration

Subtopics

HPE Synergy management appliance compatibility
Composer compatibility and support
HPE Synergy hardware overview
HPE Synergy 12000 Frame
Frame front components and device bays
Frame rear components

HPE Synergy management appliance compatibility

HPE Synergy best practices

The information in this section provides high-level requirements for designing an HPE Synergy solution.

HPE Synergy Composer

- A redundant HPE Synergy management ring requires a pair of Composers. The Composers must be the same generation for each management ring, i.e. 1st Gen or 2nd Gen - Composer 2 or Composer2 Plus)
- The 2nd Gen composers are compatible with both the 2-port FLM and the 4-port FLM.
- 

  NOTE

  The 2nd Gen - Composers include either HPE Synergy Composer 2 or HPE Synergy Composer 2 Plus appliances.

HPE Synergy Frame Link Module

- Options for the frame link modules include the 2-port FLM (804942-B21) and the 4-port FLM (876852-B21).

- Each HPE Synergy frame with a management ring requires two frame link modules. Frame link modules within the same frame must be the same generation.
- A management ring can contain mixed frame link module configurations (frames with two 2-port FLMs and frames with two 4-port FLMs. For more information about mixed frame support, see Composer compatibility and support.

Composer compatibility and support

When considering component placement in HPE Synergy, observe all compatibility and support requirements.

HPE Synergy Composer 2nd Gen compatibility

To verify compatibility for management rings using 2nd Gen composers, use the following compatibility matrix. 2nd Gen composers are compatible with both the 2-port frame link module and 4-port frame link module.

Table 1. 2nd Gen composer compatibility matrix

Frame link module	frame with 2nd Gen composers
2-port FLM	Supported
4-port FLM	Supported

HPE Synergy hardware overview

HPE Synergy enables a new class of compute modules and storage modules engineered to address the IT challenges such as those created by social, cloud, mobile, and big data. The system is managed by HPE Synergy Composer powered by HPE OneView, which provides management to dozens of HPE Synergy frames with hundreds of compute and storage modules.

HPE Synergy includes the following hardware system components:

- HPE Synergy 12000 Frame
- Appliance modules
- Compute modules
- HPE Synergy Frame Link Module and HPE Synergy 4-Port Frame Link Module

- HPE Synergy Power Supplies
- HPE Synergy Fan
- Interconnect modules

Subtopics

Supported racks and rack options

Supported racks and rack options

The frame and support rails are engineered for mounting into a 19 inch wide front panel, four-post cabinets, and racks that have been designed according to the EIA-310-D standard.

Hewlett Packard Enterprise rails are not compatible with tapped holes. There are two types of supported rail sets for the frame:

- A set for square-hole front and rear mounting flanges
- A set for round-hole flanges

The rails are compatible with a nominal rack-mounting depth of 29 1/8 in, with an adjustability range of plus ½ inch to minus 1½ inch. The rails work in both 1,075 mm and 1,200 mm deep racks.

A 42U/47U rack supports up to four frames.

While the square-hole rail set is the standard option, either rail set supports a fully loaded frame weighing 249.5 kg (550.0 lb). Four of these frames together approach the 1,020.6 kg (2,250.0 lb) internal IT equipment limit of both the following HPE Advanced G2 Series racks:

- 42U x 600 mm x 1,075 mm
- 42U x 600 mm x 1,200 mm

Cables, PDUs, and other cable management hardware could increase the weight sufficiently to require the use of the HPE 42U x 600 mm x 1,200 mm Enterprise G2 Series rack, which supports 1,247.4 kg (2,750.0 lb) of internal IT equipment.

HPE Synergy 12000 Frame

All HPE Synergy components are installed in a 10U, rack-mounted frame.

Figure 1. HPE Synergy 12000 Frame

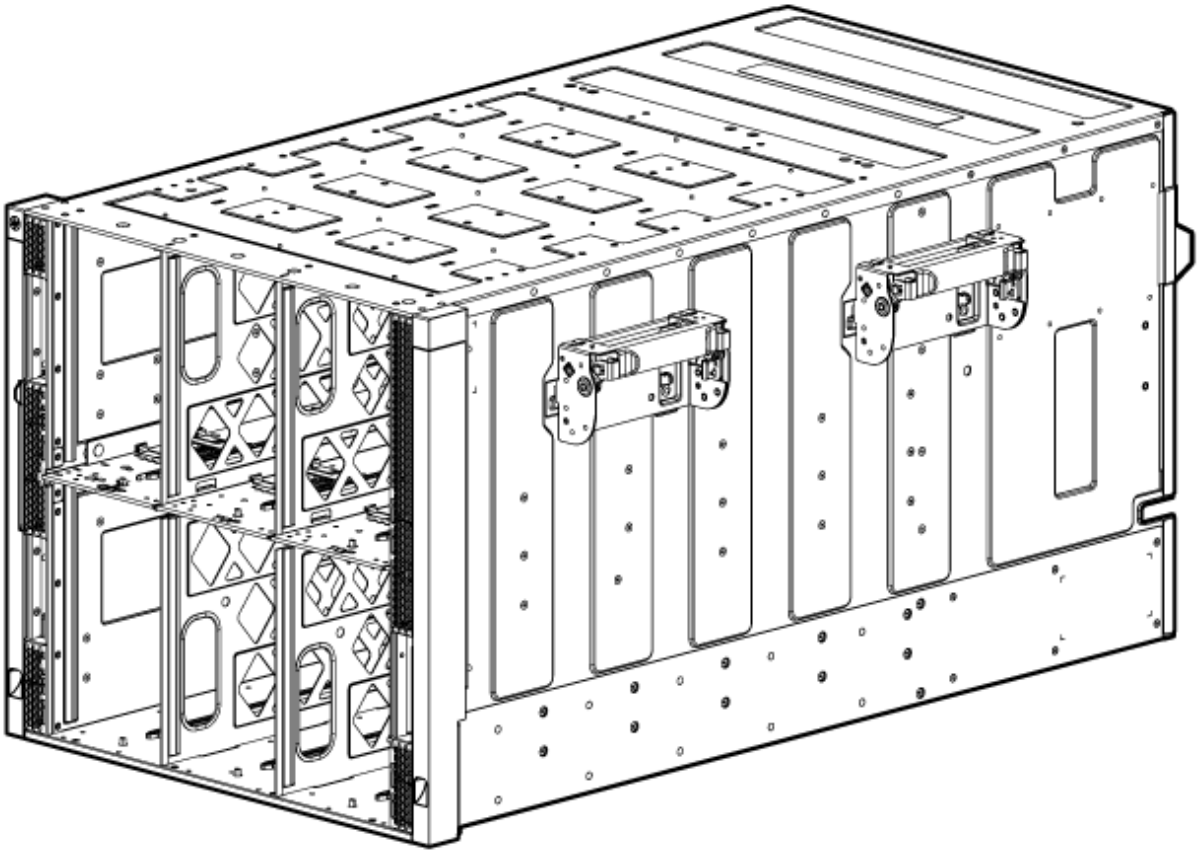

Subtopics

Frame component minimum requirements
Frame thermal requirements
Information pull tabs

Frame component minimum requirements

- All 10 fans are required. Do not mix HPE Synergy High Capacity Fans and HPE Synergy Fan Modules.
  Mixing of HPE Synergy 12000 High Capacity Fans and HPE Synergy Fan types within a running frame is not supported during normal operation. However, the brief mixing of fans is permissible during this procedure. While mixed fan types are present in the frame, alerts indicating the presence of inconsistent fan types will display in HPE OneView and on the HPE Synergy Console. These alerts will clear when this procedure is complete and the frame is fully populated with a single fan type.

- A minimum of two power supply modules are required. For more information, see "Power supply configurations."
- When the 1800W-2200W Flex Slot Titanium Hot-Plug Power Supply is used, the minimum requirements are twelve 1800W-2200W Flex Slot Titanium Hot-Plug Power Supply with six HPE Synergy Dual Slot Power Supply Adapters. For more information, see "Power supply configurations for Flex Slot Power Supplies."
- A minimum of one interconnect module per fabric interconnect bay set is required for networking or storage connectivity. For more information, see "Interconnect module configurations."
- A minimum of one frame link module is required in a single-frame configuration. For production environments, two frame link modules are required to ensure redundancy. For more information, see "Frame link module configurations."
- A minimum of one Composer is required within the system. For more information, see " HPE Synergy Composer configurations."

Subtopics

Single frame configurations with redundant Composers and only a single frame link module

Single frame configurations with redundant Composers and only a single frame link module

> **CAUTION**
> A single frame configuration with two Composers and a single frame link module does not provide full redundancy and is not a supported configuration for use in production environments.

A single frame link module failure causes the Active Composer to restart unexpectedly which causes a failover to the Standby Composer. Such a failure is also observed during a frame link module firmware update that requires a restart of the frame link module. To bring this configuration into a fully redundant configuration, add an additional frame link module.
If you must perform a frame link module firmware update while operating with a single frame link module, perform a **Remove standby** action in HPE OneView prior to updating the firmware. Once the frame link module firmware update completes, bring the Standby Composer back into the cluster by powering on the Composer.

Frame thermal requirements

CAUTION
All bays within the frame that do not have a component installed must have a bay blank installed.

CAUTION
Do not block the frame front-side air vents. The vents are required for air flow throughout the frame.

All device bays within the frame that do not have a component installed must have a device bay blank installed. HPE Synergy has the following blank options available:

- Half-height* device bay blank
- Appliance bay blank
- Interconnect bay blank
- Frame link module bay blank
- Power supply bay blank

*For full-height device bays, use a coupler plate (HPE part number 417849-001) to connect two half-height device bay blanks to create a full-height device bay blank.

Information pull tabs

Pull tabs on the HPE Synergy frame front and rear provide system information.

Figure 1. Information pull tab locations

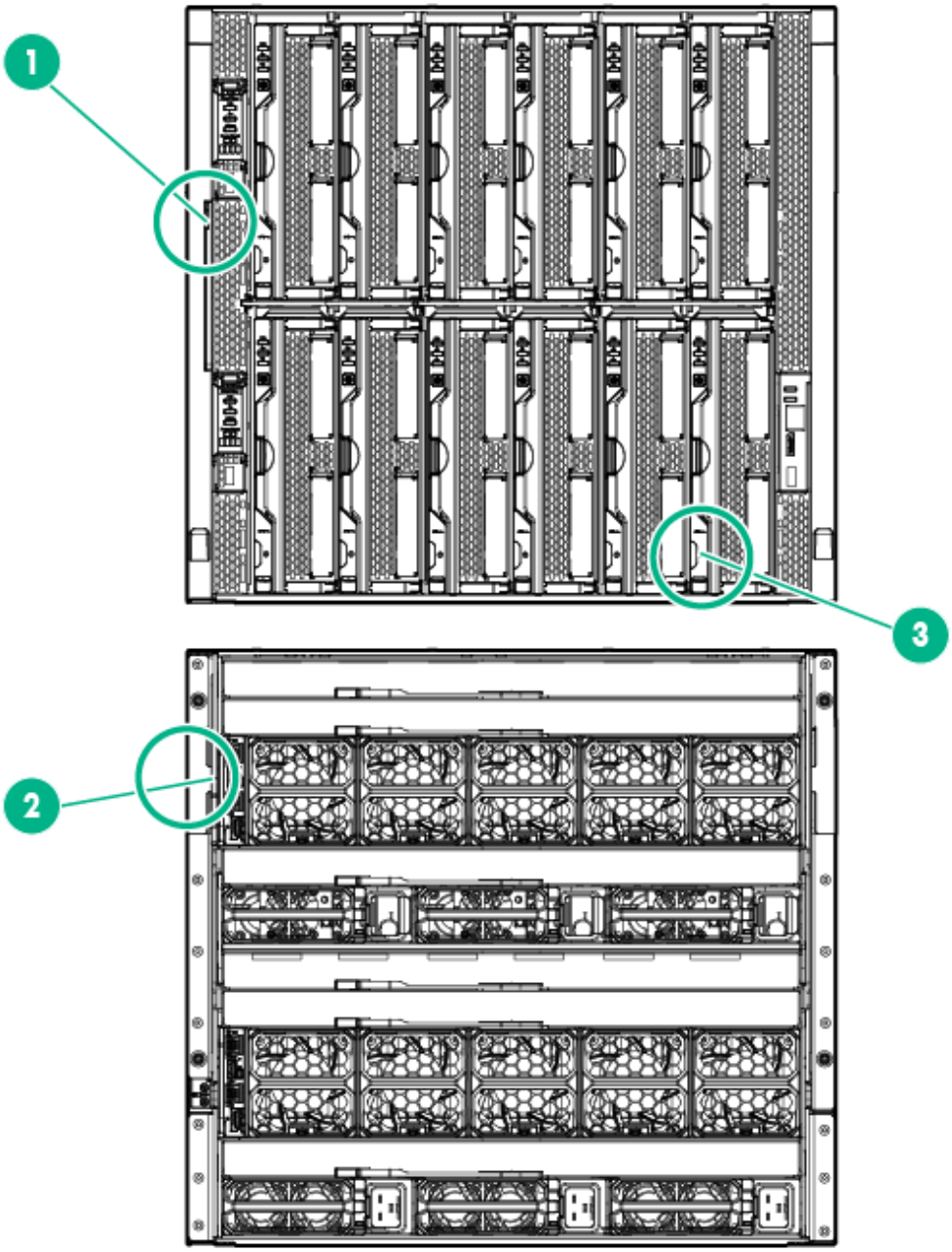

Item	Description
1	The front pull tab (top left) has the frame product ID, serial number, and th e device bay numbering for the frame front bays.
2	The rear pull tab (top left) has the bay numbering for the frame rear bays.
3	The serial label pull tab is on each compute module and provides the foll owing information: • Product serial number

Item	Description
	• iLO information

Figure 2. Accessing the information pull tabs

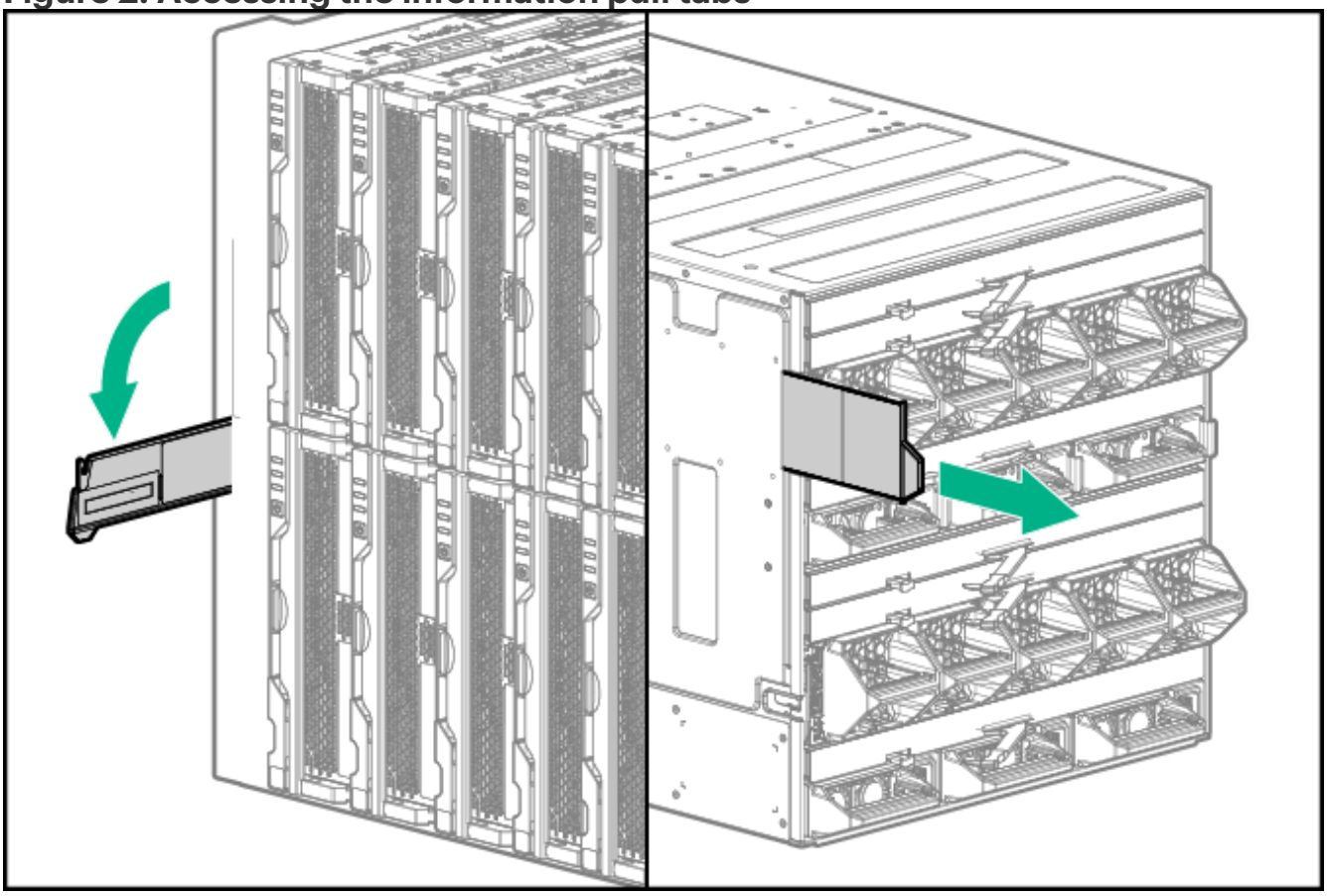

Frame front components and device bays

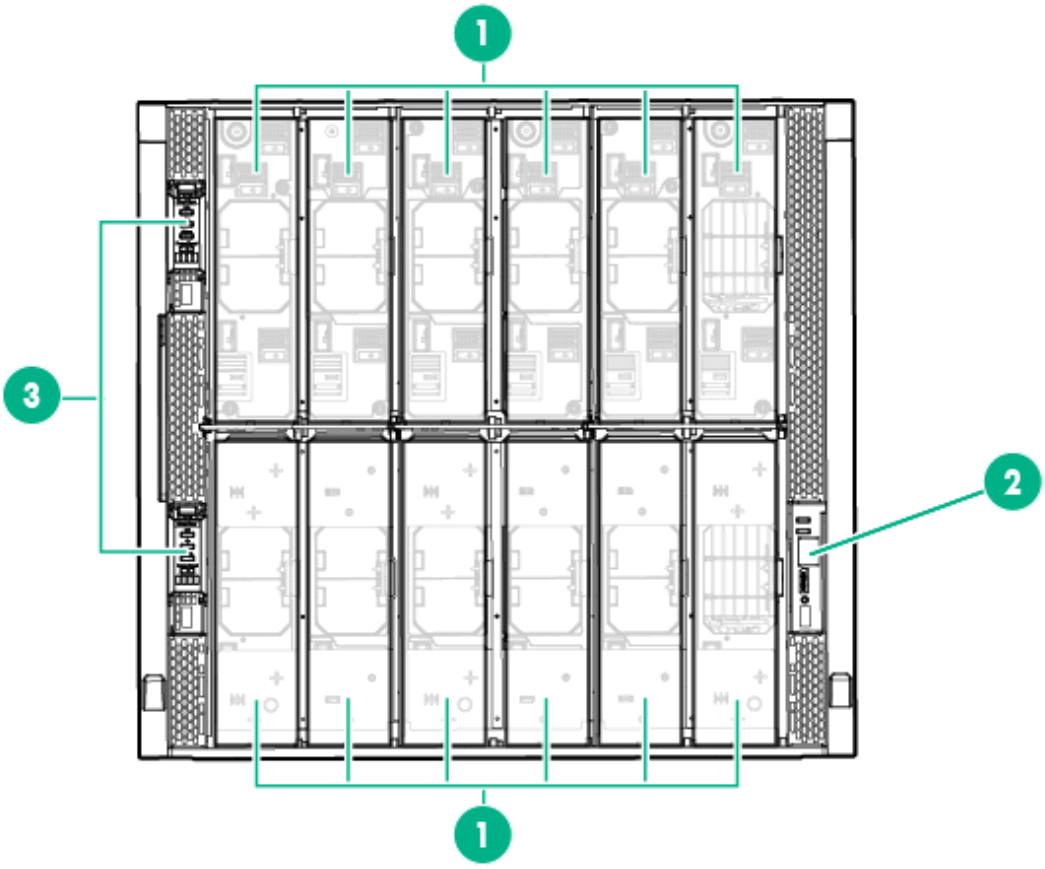

Item	Description
1	Device bays—Compute modules.
2	Front panel—Provides access to the HPE Synergy Console, through KVM or laptop.
3	Appliance bays.

Subtopics

Device bay numbering
Appliance modules
Compute modules

Device bay numbering

Device bays in the frame are numbered in consecutive order from lowest to highest, from left to right from top to bottom, as observed by a user looking directly at the frame.

The device bay numbering is available on the Information pull tabs.

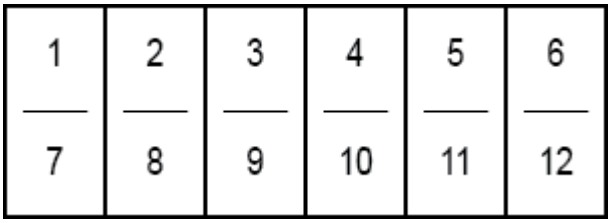

Subtopics

Device bay partitions

Device bay partitions

Vertical frame partitions

There are two vertical partitions between device bays in the frame. These nonremovable partitions provide structural integrity to the frame as well as mechanical attach points for the horizontal shelf that divide a full-height bay into two half-height bays.

Figure 1. Vertical partitions

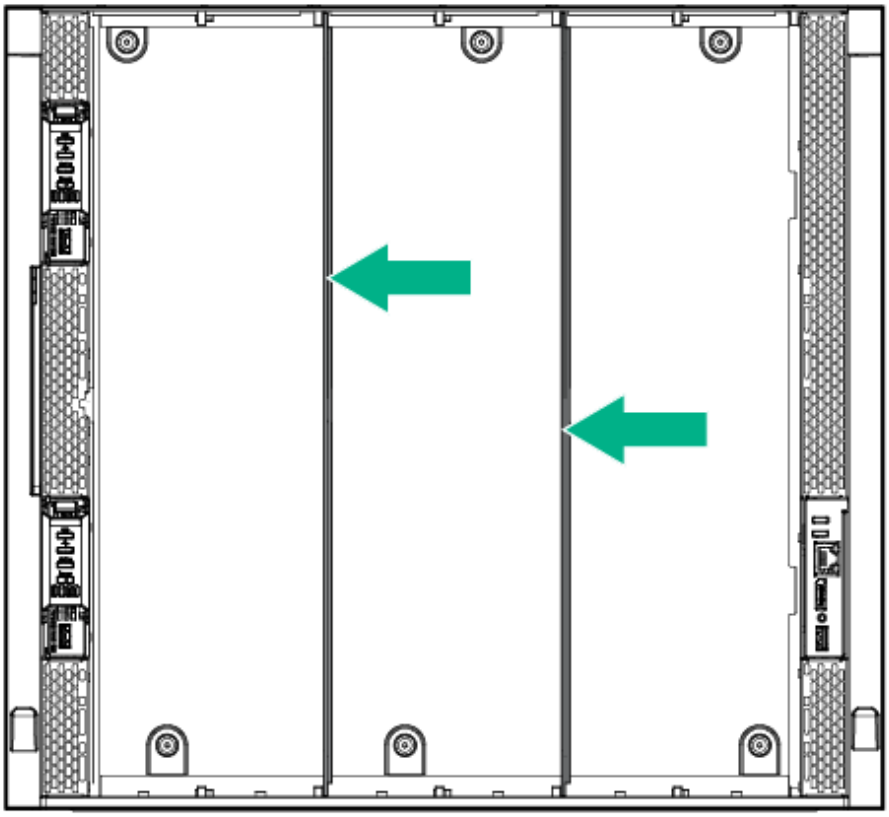

Horizontal frame partitions

The horizontal frame partitions are removable shelves that divide a full-height device bay into a half-height device bay.

Up to 12 half-height device modules can be installed in a frame.

Figure 2. Horizontal partitions

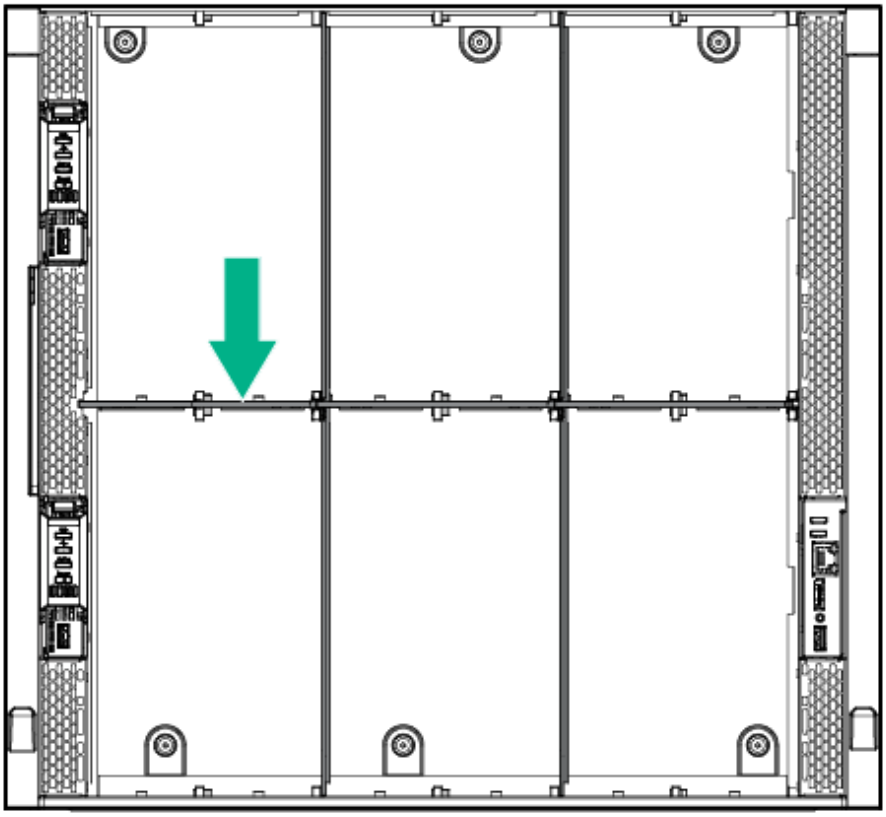

Appliance modules

You install the composer appliance module in the appliance bays in the front of the HPE Synergy frame:

The label on the front of the appliance module identifies the name of the appliance module.

Figure 1. Appliance modules

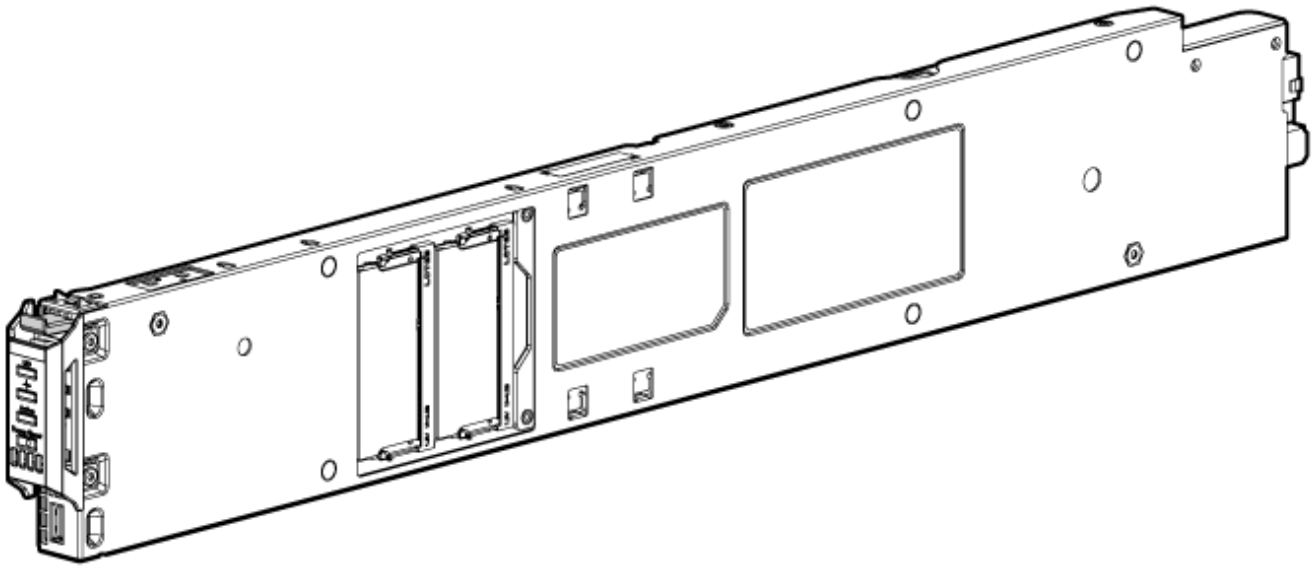

Subtopics

Appliance bay numbering
HPE Synergy Composer, HPE Synergy Composer2 and HPE Synergy Composer2 Plus

Appliance bay numbering

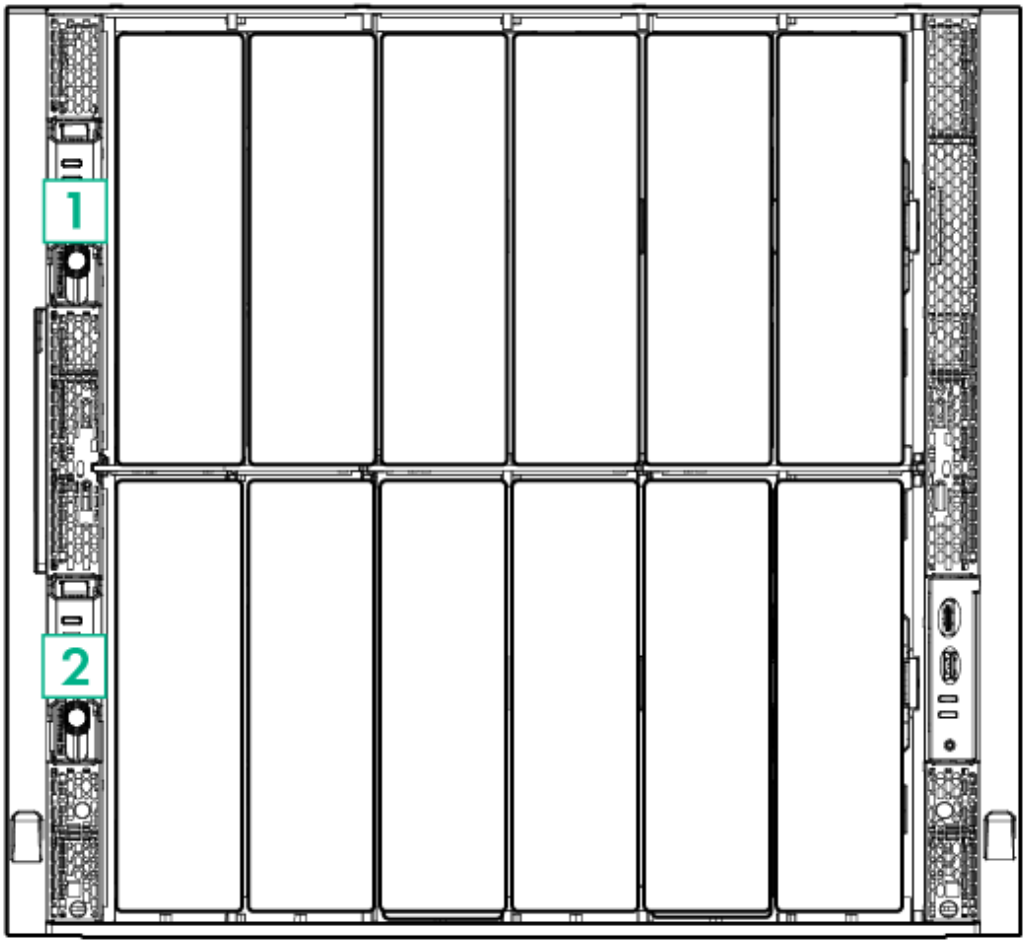

HPE Synergy Composer, HPE Synergy Composer2 and HPE Synergy Composer2 Plus

Powered by HPE OneView, Composers provide the ability to setup, manage, and monitor single or multiple linked frames.

Subtopics

Composer configurations

Composer configurations

- A minimum of two Composers is required per HPE Synergy management ring or management domain.
- If redundancy is required, two Composers of the same type must be paired within the same management ring per HPE Synergy system for high-availability management:
  - In a single-frame installation, or in configurations where the HPE Synergy system is composed entirely of a set of single frames, both Composers must be installed in one of the frames within the HPE Synergy system.
  - The required configuration for a multiframe installation is to install each Composer in a separate frame.
  - In multiframe installations comprising multiple management rings, both Composers must be located within the same management ring.

For configuration options for the Composer, see the product QuickSpecs on the Hewlett Packard Enterprise website (**https://www.hpe.com/info/qs**).

Compute modules

Compute modules are installed in the device bays in the front of the frame. Each compute module delivers high performance, efficiency, and scalability to power demanding workloads. The compute modules deliver increased virtual machine density by providing a full range of processor and storage options, and a simplified I/O architecture.

HPE Synergy 480 Compute Modules

The family of HPE Synergy 480 Compute Modules span from Gen9 through Gen12. HPE Synergy 480 Compute Modules are two-socket, half-height, single-wide form factor compute modules. The following figure is an example of the HPE Synergy 480 Compute Module. Your compute module might vary in appearance.

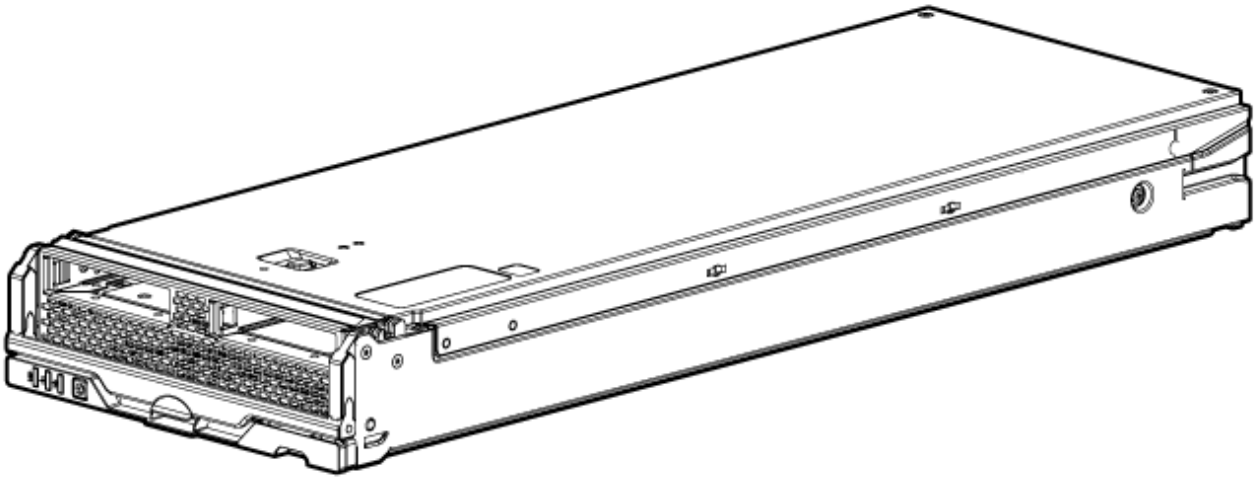

Subtopics

Mezzanine port configurations
Mezzanine to frame signal routing

Mezzanine port configurations

Mezzanine cards for HPE Synergy compute modules come in the following sizes:

- Type C — Type C mezzanine cards can be installed on either Type C or Type D mezzanine connectors.
- Type D — Type D mezzanine cards can be installed only on Type D connectors.
- OCP Interposer — Storage controllers can be installed into OCP Interposer cards only. Installation in mezzanine slot 2 for Gen12 compute modules only.

The mapping from mezzanine connectors in compute modules to interconnect module bays is shown in the following table.

All mezzanine connectors in the table are not available for all compute modules. For example, half-height single-wide compute modules have only Mezzanine connector 1, 2, and 3 on the system board. For more information on the mezzanine connectors available on each compute module, see the compute module user guide.

Item	Connector identification	Supported card types	Fabric	Supported ICM bays
1	Mezzanine connector 1 (M1)	Type C and Type D	1	ICM 1 and 4
2	Mezzanine connector 2 (M2)	Type C, Type D and OCP Interposer	2	ICM 2 and 5
3	Mezzanine connector 3 (M3)	Type C only	3	ICM 3 and 6
4	Mezzanine connector 4 (M4)	Type C and Type D	1	ICM 1 and 4
5	Mezzanine connector 5 (M5)	Type C and Type D	2	ICM 2 and 5
6	Mezzanine connector 6 (M6)	Type C	3	ICM 3 and 6
7	Mezzanine connector 7 (M7)	Type C and Type D	1	ICM 1 and 4
8	Mezzanine connector 8 (M8)	Type C and Type D	2	ICM 2 and 5
9	Mezzanine connector 9 (M9)	Type C	3	ICM 3 and 6
10	Mezzanine connector 10 (M10)	Type C and Type D	1	ICM 1 and 4
11	Mezzanine connector 12 (M12)	Type C only	3	ICM 3 and 6

Mezzanine connector definitions and installation guidelines vary depending on the compute module. For more information, see the compute module user guide. For more information about supported mezzanine options, see the compute module QuickSpecs on the **Hewlett Packard Enterprise website**.

Mezzanine to frame signal routing

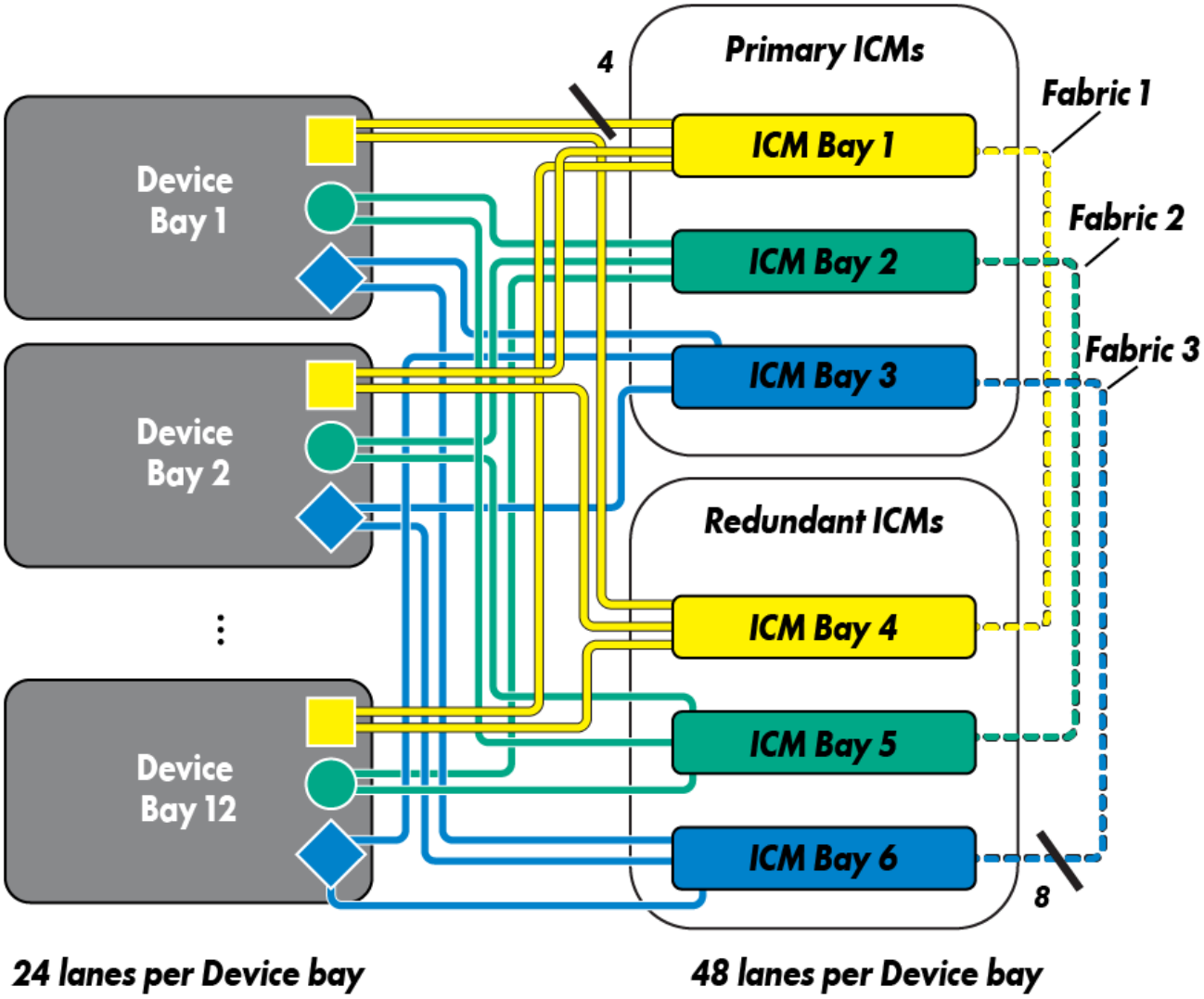

The HPE Synergy 12000 Frame midplane provides 4-lane high-speed signal routing from all 12 device bays to the 6 interconnect module bays. A pair of interconnects installed in an interconnect bay set provides redundant connectivity for each connected mezzanine card. When a device bay contains a compute module, then each of the installed mezzanine cards connects to the corresponding interconnect bay sets.

Usage of these interconnections is dependent on the type of fabric chosen to be installed. For example, a 10Gb Ethernet mezzanine card uses only a single lane of each four-lane group. The SAS fabric uses all four lanes.

Frame rear components

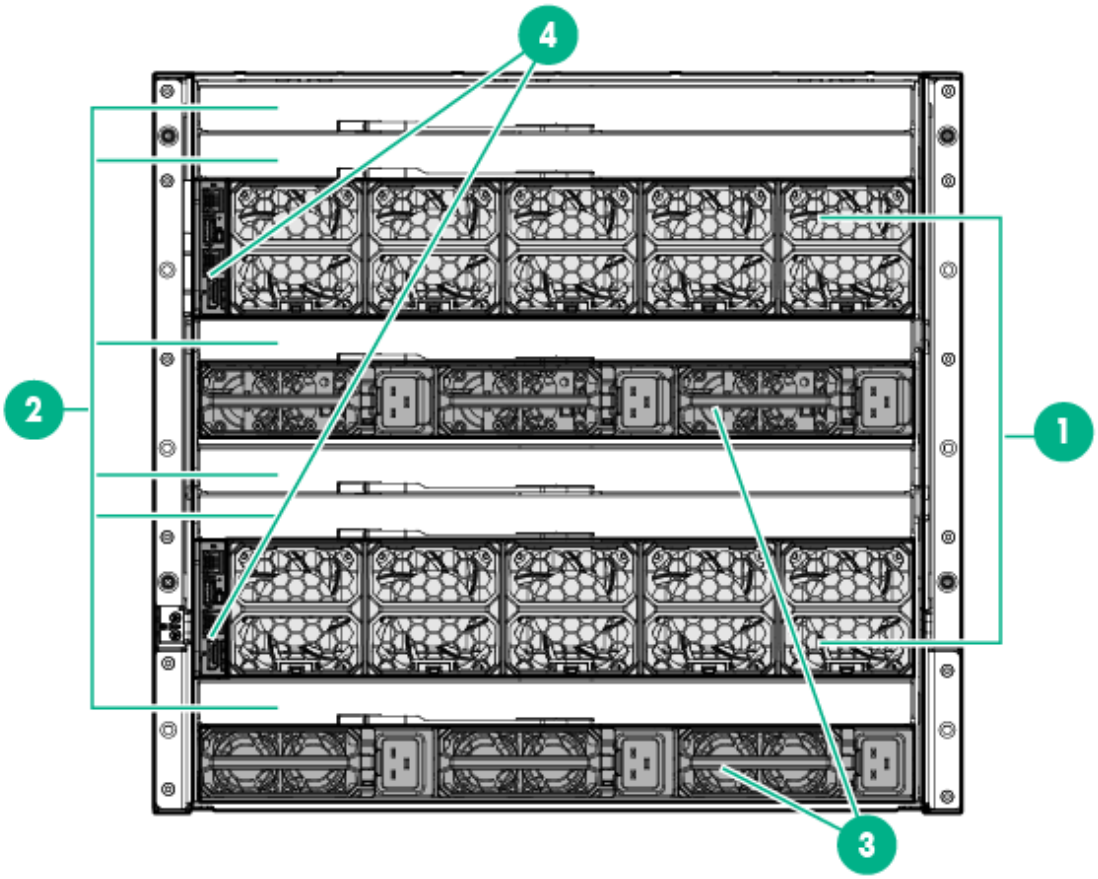

Item	Description
1	Fans (10)
2	Interconnect modules (up to 6)
3	Power supplies (6) shown or (12)
4	Frame link modules (2)

Subtopics

Rear component bay numbering
Rear component bay numbering
HPE Synergy Frame Link Module and HPE Synergy 4-Port Frame Link Module
HPE Synergy Power Supplies
HPE Synergy Fan
Interconnect modules

Rear component bay numbering

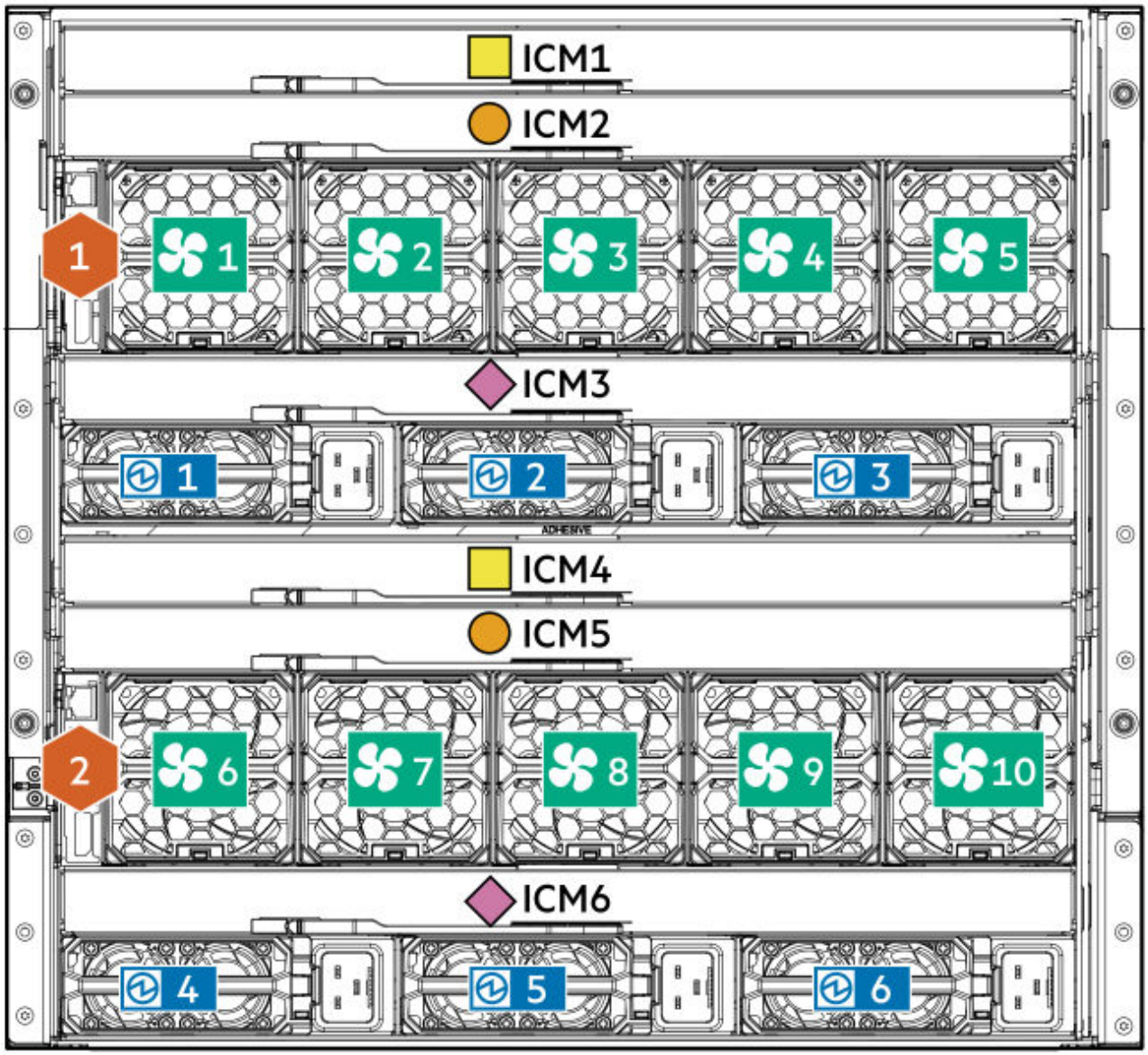

Components	Bays	Labels
Frame link modules	1 and 2	
Interconnect modules These interconnect modules are redundant pairs on fabric 1.	1 and 4	

Components	Bays	Labels
Interconnect modules These interconnect modules are redundant pairs on fabric 2.	2 and 5	
Interconnect modules These interconnect modules are redundant pairs on fabric 3.	3 and 6	
Fans	1 through 10	
Power supplies	1 through 6	

Rear component bay numbering

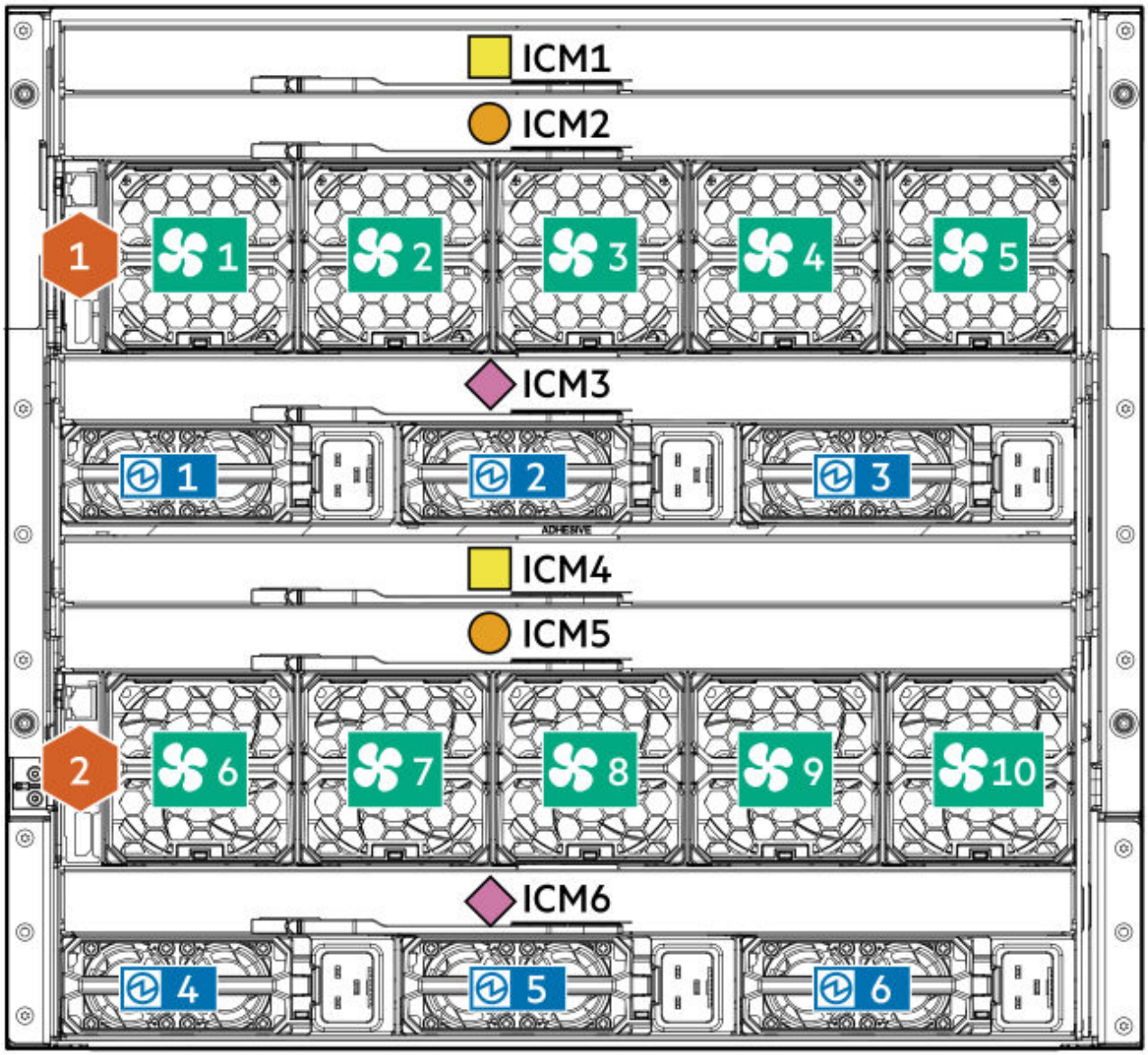

Components	Bays	Labels
Frame link modules	1 and 2	
Interconnect modules These interconnect modules are redundant pairs on fabric 1.	1 and 4	

Components	Bays	Labels
Interconnect modules These interconnect modules are redundant pairs on fabric 2.	2 and 5	
Interconnect modules These interconnect modules are redundant pairs on fabric 3.	3 and 6	
Fans	1 through 10	
Power supplies	1 through 6	

HPE Synergy Frame Link Module and HPE Synergy 4-Port Frame Link Module

The HPE Synergy Frame Link Module and the HPE Synergy 4-Port Frame Link Module are components that install in the rear of the frame. A HPE Synergy Frame Link Module and a HPE Synergy 4-Port Frame Link Module cannot be installed in the same frame.

The frame link module:

- Controls and monitors the thermal and power infrastructure resources in an HPE Synergy 12000 Frame.
- Monitors and reports health status of the frame, and each installed component, to the HPE Synergy Console and HPE OneView.
- Validates compatibility and enables connectivity between mezzanine adapters installed in compute modules and interconnect modules installed in frame.
- Performs auto-discovery of installed frame components including the collection and reporting of asset and inventory information to HPE OneView.
- Links frames together to create a management ring (frame link topology) and autonomously manages redundant connectivity to and around the management ring (frame link topology).
- Provides out-of-band management interface to HPE OneView for configuration and management of interconnect modules.

- Hosts the HPE Synergy Console user interface which is used to assist in initial frame setup, configuration, and troubleshooting.

Figure 1. HPE Synergy 2-Port Frame Link Module

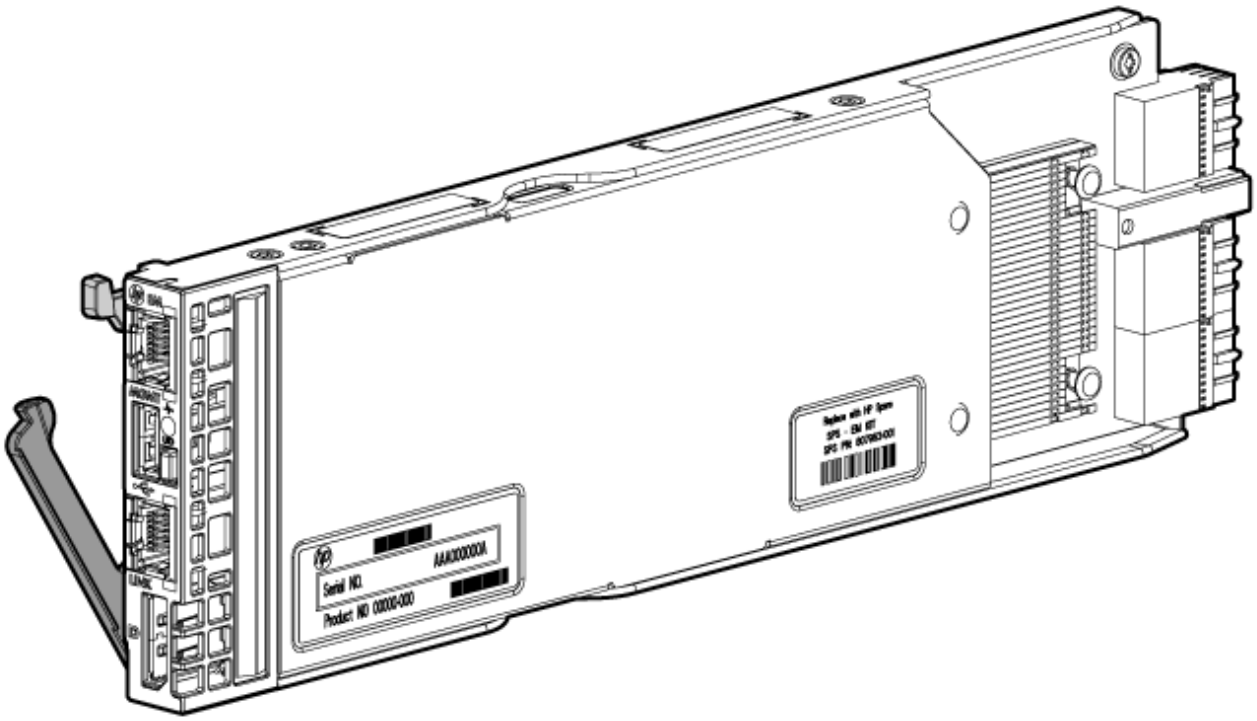

Figure 2. HPE Synergy 4-Port Frame Link Module

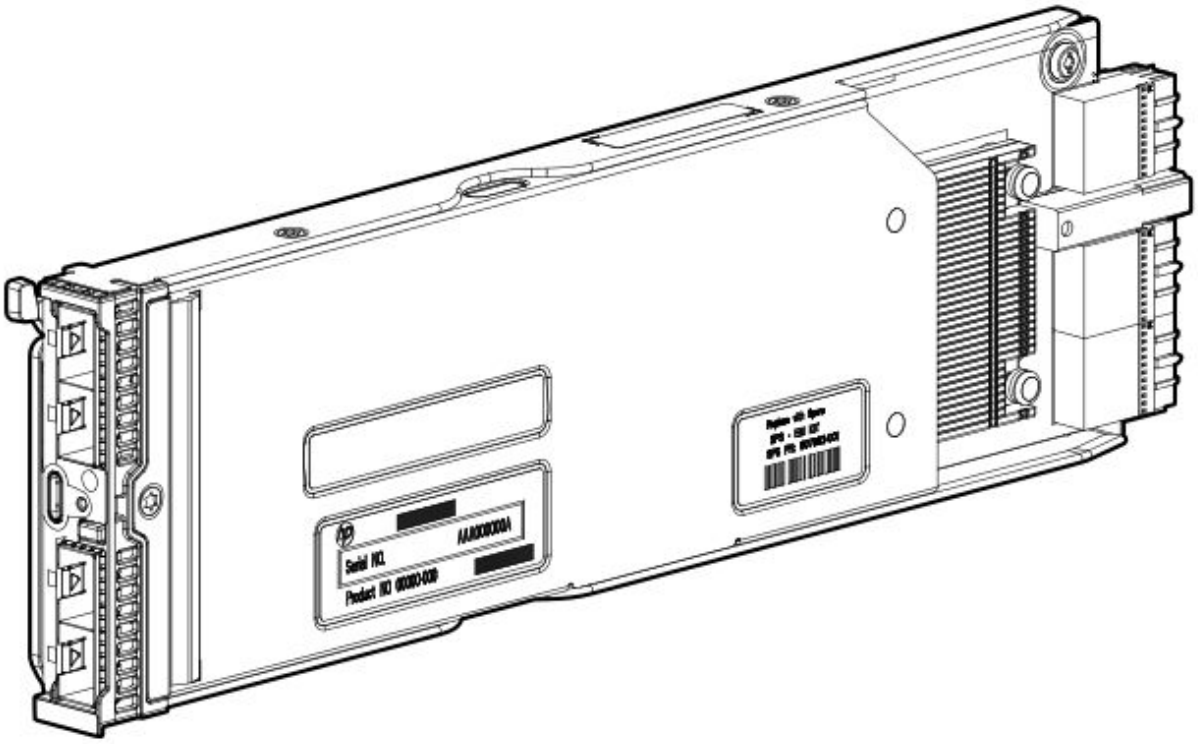

Subtopics

HPE Synergy 4-Port Frame Link Module components and LEDs
HPE Synergy Frame Link Module components and LEDs
Frame link module configurations

HPE Synergy 4-Port Frame Link Module components and LEDs

NOTE

HPE Synergy 4-Port Frame Link Modules require supported SFP+ DAC cables or SFP+ transceivers for cabling. For more information, see the product QuickSpecs on the **Hewlett Packard Enterprise website**.

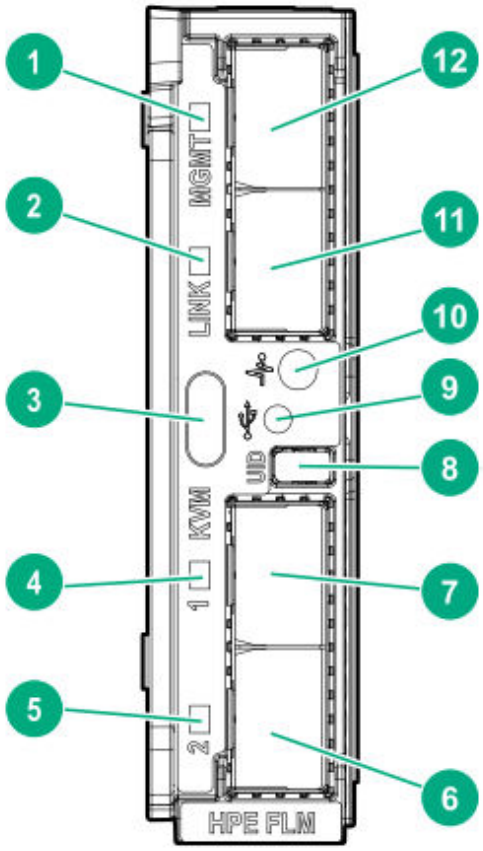

Item	Description	Function
1	MGMT port activity LED	Reports MGMT port activity: • Flashing green = Activity on the MGMT port • Off = No activity on the MGMT port
2	LINK port activity LED	Reports LINK port activity: • Flashing green = Activity on the LINK port • Off = No activity on the LINK port
3	KVM port	**NOTE** Connection to the KVM port requires an HPE Synergy 4-Port Frame Link Module USB Adapter. **NOTE**

Item	Description	Function
		Supports storage devices that are USB 2.0 comp atible. When an HPE Synergy 4-Port Frame Link Module USB Adapter is installed, the HPE Synergy 4-Port Frame Link Module: • Allows connection to the frame using a supported USB d evice. Devices include a keyboard or mouse for connecting to th e HPE Synergy Console. To connect multiple devices, a US B hub (not included) is required. • Allows connection to the frame using a monitor device or an active monitor port adapter. **NOTE** Passive monitor port adapters are not support ed. See the manufacturer specifications for a dapter details. Used for performing a USB recovery frame link module firmwa re update.
4	Appliance port 1 c onnectivity LED	Reserved for future use.
5	Appliance port 2 connectivity LED	Reserved for future use.
6	Appliance port 2	Reserved for future use.
7	Appliance port 1	Reserved for future use.
8	UID button / LED	Toggles the UID LED on or off. • Solid blue = Activated • Off = Deactivated • Flashing blue = Firmware upgrade is in progress on the fra me link module. When turned on, the frame UID LED on the front panel also tur ns on. This synchronization allows identification of the frame f rom the front or rear.

Item	Description	Function
		Do not remove either frame link module while the UID LED is fl ashing.
9	USB adapter thu mbscrew connect ion	For securing an HPE Synergy 4-Port Frame Link Module USB Adapter to the HPE Synergy 4-Port Frame Link Module.
10	Health LED	Provides the health status of the frame link module. • Solid green = Normal operation • Flashing amber = Warning • Flashing red = Critical error If the Health LED indicates a warning or a critical error, con nect to HPE OneView or to the HPE Synergy Console for m ore information and troubleshooting assistance.
11	LINK port	SFP+ connector that provides the following functions: **IMPORTANT** Use supported SFP+ 10GbE DAC cables or transc eivers for LINK port connections. For more inform ation, see the product QuickSpecs on the **Hewle tt Packard Enterprise website**. • Provides high availability management network connectivi ty between: ◦ LINK ports on two frame link modules in the same fram e for a single frame configuration ◦ Frame link modules in different frames as part of a man agement network ring in a multiframe configuration • Provides management ring (frame link topology) connecti vity for automatic frame discovery by HPE OneView.
12	MGMT port	SFP+ connector that provides the following functions: **IMPORTANT** Use supported SFP+ DAC cables or transceivers for MGMT port connections. For more informatio

Item	Description	Function
		n, see the product QuickSpecs on the **Hewlett Packard Enterprise website**. **IMPORTANT** The transceiver or cable used must match the po rt speed of the switch used for management net work connectivity. • Provides a management uplink to the management netwo rk. • 10GbE or 1GbE based on the cable or transceiver used.

HPE Synergy Frame Link Module components and LEDs

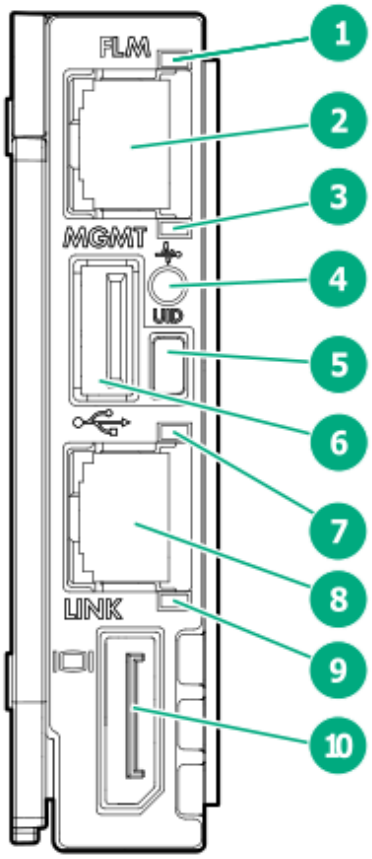

Item	Description	Function
1	MGMT port activity LED	Reports MGMT port activity: • Flashing green = Activity on the MGMT port • Off = No activity on the MGMT port
2	MGMT port	A 10GBASE-T RJ45 connector that provides the following functions: • Provides a management uplink to the management network. • Automatically negotiates speed to 10GbE or 1GbE based on the connection.
3	MGMT port connectivity LED	Reports MGMT port connectivity: • Solid green = MGMT port is connected. • Off = MGMT port is not connected.
4	Health LED	Provides the health status of the frame link module. • Solid green = Normal operation • Flashing amber = Warning • Flashing red = Critical error If the Health LED indicates a warning or a critical error, connect to HPE OneView or to the HPE Synergy Console for more information and troubleshooting assistance.
5	UID button / LED	Toggles the UID LED on or off. • Solid blue = Activated • Off = Deactivated • Flashing blue = Firmware upgrade is in progress on the frame link module. When turned on, the frame UID LED on the front panel also turns on. This allows identification of the frame from the front or rear. Do not remove either frame link module while the UID LED is flashing.
6	USB port	Allows connection to the frame using a supported USB device. Devices include a keyboard or mouse for connecting to the

Item	Description	Function
		HPE Synergy Console. To connect multiple devices, a USB hub (not included) is required. Used for performing a USB recovery frame link module firmware update.
7	LINK port activity LED	Reports LINK port activity: • Flashing green = Activity on the LINK port • Off = No activity on the LINK port
8	LINK port	A 10GBASE-T RJ45 connector that provides two functions: • Provides high-availability management network connectivity between: ◦ LINK ports on two frame link modules in the same frame for a single frame configuration. ◦ Frame link modules in different frames as part of a management network ring in a multiframe configuration. • Provides management ring (frame link topology) connectivity for automatic frame discovery by HPE OneView.
9	LINK port connectivity LED	Reports LINK port connectivity: • Solid green = LINK port is connected. • Off = LINK port is not connected.
10	Monitor port	Allows connection to the frame using a monitor device or an active monitor port adapter. **NOTE** Passive monitor port adapters are not supported. See the manufacturer specifications for adapter details.

Frame link module configurations

- A minimum of one frame link module must be installed in every frame. It can be installed in either frame link module bay.
- A second frame link module of the same type can be installed in the frame for redundancy and to provide the ability to link multiple frames together into a management ring.
- The frame link modules within each frame must be of the same type (2-port or 4-port). However, you can connect 2-port and 4-port frames within the same management ring or logical enclosure.
- For each installed Composer, you must uplink the management cable for the frame link module with the same bay number in the same frame.

HPE Synergy Power Supplies

The HPE Synergy hot-pluggable power supplies provide power to the components installed in the frame.

HPE Platinum and Titanium Power Supplies

The HPE Synergy 12000 Frame supports the following Platinum and Titanium power supplies:

HPE 1800-2200W Flex Slot Titanium Hot Plug Power Supply

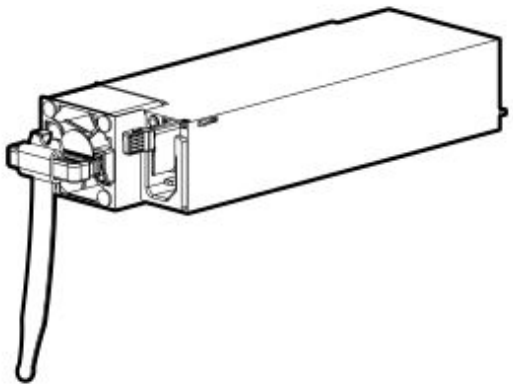

HPE Synergy Dual Slot Power Supply Adapter (for flex slot power supplies)

The HPE Synergy Dual Slot Power Supply Adapter supports the HPE 1800-2200W Flex Slot Titanium Hot Plug Power Supply in the HPE Synergy 12000 Frame.

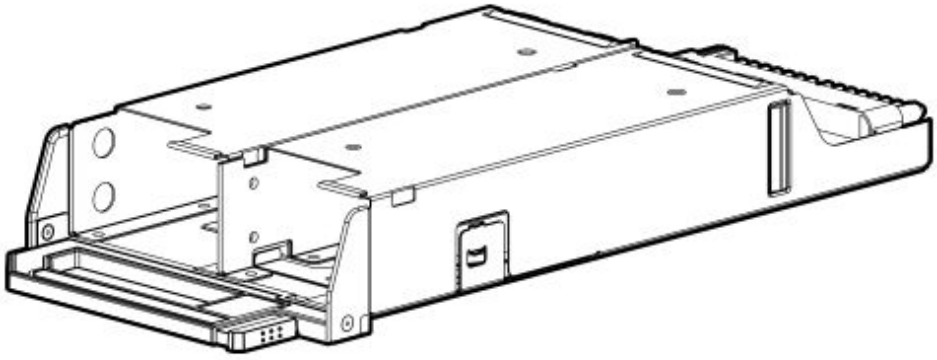

HPE 2650W Performance Hot Plug Titanium Power Supply

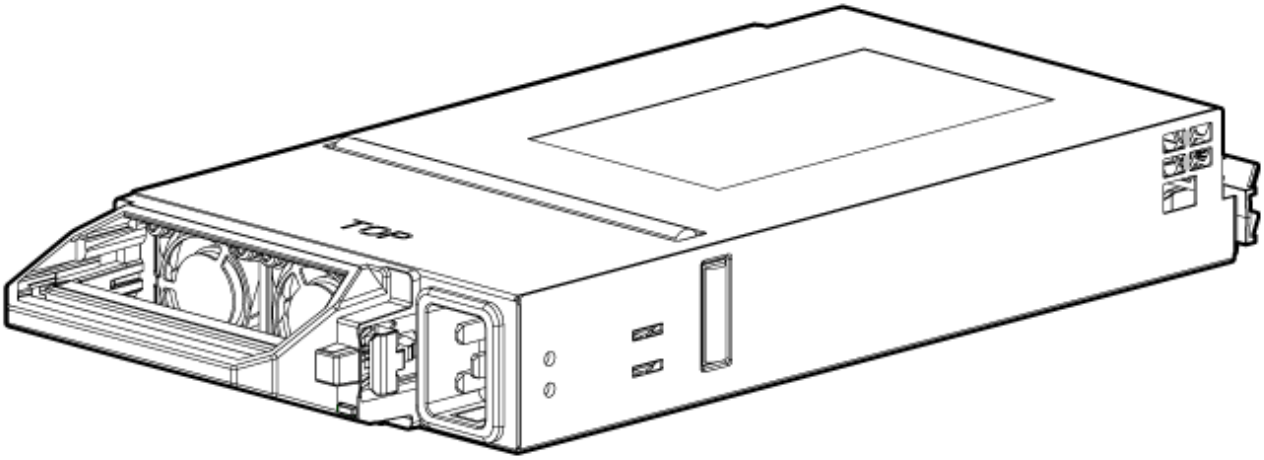

HPE 2900-3400W Hot Plug Platinum Power Supply

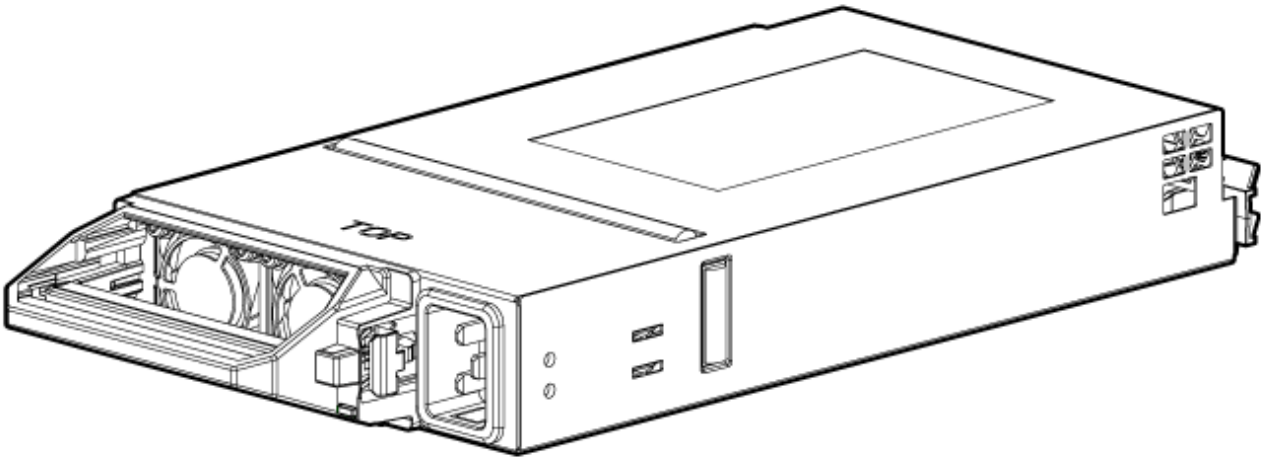

HPE 2650W 277VAC Hot Plug Power Supply

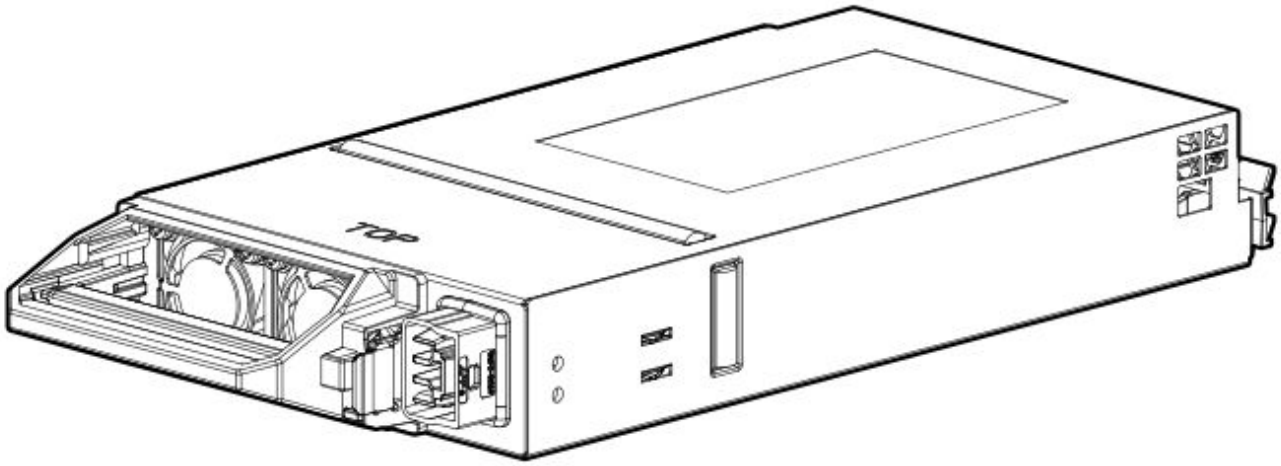

HPE 2650W HVDC Hot Plug Power Supply

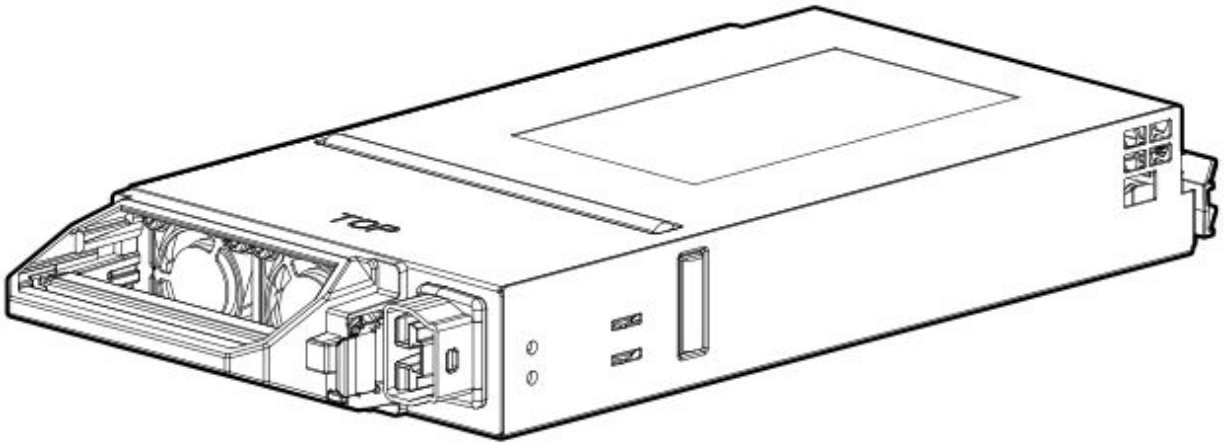

HPE 2650W -48VDC Hot Plug Power Supply

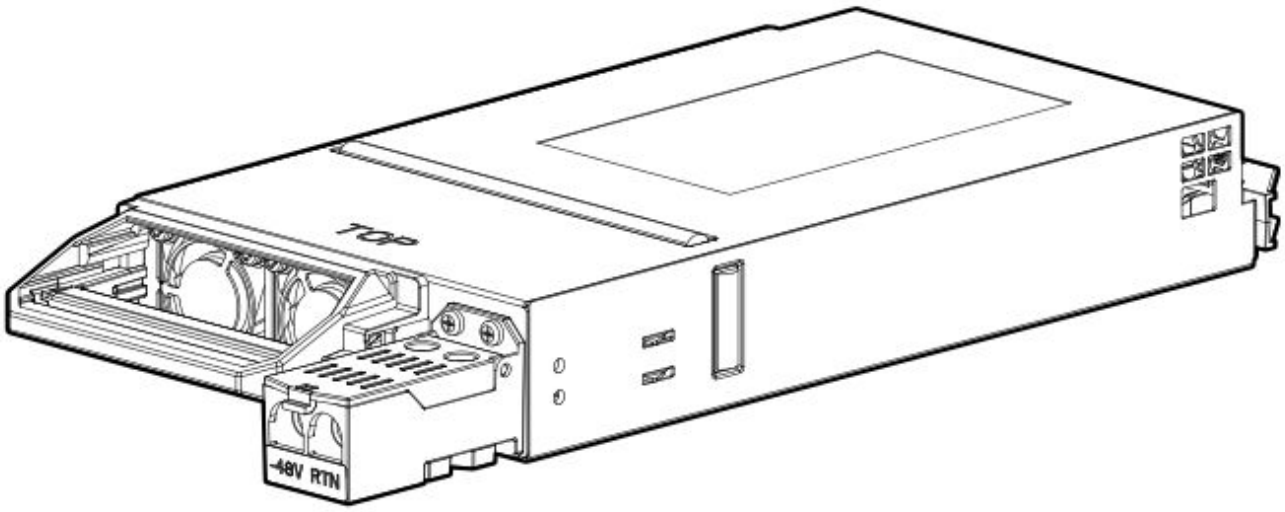

Subtopics

Power supply configurations for flex slot power supplies
Power supply configurations
Flex slot power supplies best practices

Power supply configurations for flex slot power supplies

Power supplies with sufficient output capacities and following power supply installation configuration guidelines are installed to support the installed devices and interconnect modules. Power estimates for HPE Synergy can be provided using HPE Power Advisor. For more information, see **HPE Power Advisor**.

In addition to power supply configurations, the Flex Slot Titanium power supplies require a unique adapter for operation. The HPE Synergy hot-pluggable power supplies provide power to the components installed in the frame. The Dual Slot Power Supply Adapter is used with the HPE 1800W-2200W Flex Slot Titanium Power Supply. Each dual slot power supply adapter accommodates two flex slot power supplies. When these power supplies are used, all 6 bays of the frame must be populated with dual slot power supply adapters (6) filled with flex slot power supplies (12).

NOTE

Balance facility power phases, unbalance may cause circuit breakers to trip.

The flex slot power supply supports output capacities from 1800W-2200W depending on the input voltage and current rating of the power infrastructure. The capacity defaults to 1800W and requires user configuration in HPE OneView to increase the power supply output capacity if the operating environment supports it.

NOTE

For the flex slot power configuration, you must meet minimum software and SSP requirements.

NOTE

The default power mode is Redundant power feed mode.

Number of power supplies	Power modes	Power supply bay (power feed)
1 through 11	Not supported	—
12	Redundant power supply mode	1A(A), 1B(A), 2A(A), 2B(A), 3A(A), 3B(A), 4A(A), 4B(A), 5A(A), 5B(A), 6A(A), 6B(A)
	Redundant power feed mode	1A(A), 1B(B), 2A(A), 2B(B), 3A(A), 3B(B), 4A(A), 4B(B), 5A(A), 5B(B), 6A(A), 6B(B)

All power supply configuration for the frame must be of the same type. Mixed-type power supply configurations are not supported.

Power supply configurations

A minimum of two and a maximum of six power supplies are supported in the frame. There are no power supply bay placement restrictions in the frame. However, for best cooling and power distribution, Hewlett Packard Enterprise recommends the following best practice for power supply usage.

NOTE
The default power mode is Redundant power feed mode.

Number of power supplies	Power modes	Power supply bay (power feed)
1	Not supported	—
2	Redundant power supply mode Redundant power feed mode	1(A) and 3(A) 1(A) and 3(B)
3	Redundant power supply mode	1(A), 3(A), and 5(A)
4	Redundant power supply mode Redundant power feed mode	1(A), 3(A), 4(A), and 6(A) 1(A), 3(B), 4(A), and 6(B)
5 [1]	Redundant power supply mode	1(A), 2(A), 3(A), 4(A), and 6(A)
6	Redundant power supply mode Redundant power feed mode	1(A), 2(A), 3(A), 4(A), 5(A), and 6(A) 1(A), 2(A), 3(B), 4(A), 5(B), and 6(B)
12	Redundant power supply mode Redundant power feed mode	Redundant power supply mode 1A, 2A, 3A, 4A, 5A, 6A and 1B, 2B, 3B, 4B, 5B, 6B

[1] If an odd number of power supplies are installed in a frame that is configured for redundant power feed mode, all power supplies are providing power to the frame, but the capacity of the odd power supply is not used to determine the overall power capacity of the frame.

Flex slot power supplies best practices

For best cooling and power distribution, Hewlett Packard Enterprise recommends the following best practice for power supply installation and usage:

- A frame configured to support HPE Synergy Gen11 or later compute modules may optionally include dual slot power supply adapters populated with flex slot power supplies.
- The flex slot power supply supports output capacities from 1800W-2200W depending on the input voltage and current rating of the power infrastructure. The capacity defaults to 1800W and requires user configuration in HPE OneView to increase the power supply output capacity if the operating environment supports it.
- When using the flex slot power supplies all six (6) frame power supply bays must be populated with dual slot power supply adapters filled with flex slot power supplies to achieve a supported configuration.
- All power supply configurations for the frame must be the same type. Mixed-type power supply configurations are not supported.

For bay numbering for power supplies, see Rear component bay numbering.

HPE Synergy Fan

Mixing of HPE Synergy 12000 High Capacity Fans and HPE Synergy Fan types within a running frame is not supported during normal operation. However, the brief mixing of fans is permissible during this procedure. While mixed fan types are present in the frame, alerts indicating the presence of inconsistent fan types will display in HPE OneView and on the HPE Synergy Console. These alerts will clear when this procedure is complete and the frame is fully populated with a single fan type. The fans provide air circulation and cooling for the frame components and compute modules.

NOTE
All ten fans are required in the HPE Synergy 12000 Frame.

NOTE
The HPE Synergy 12000 High Capacity Fan can be identified by the fan image in the ends of the handle. The fan LED is circled below for reference.

Figure 1. HPE Synergy fan

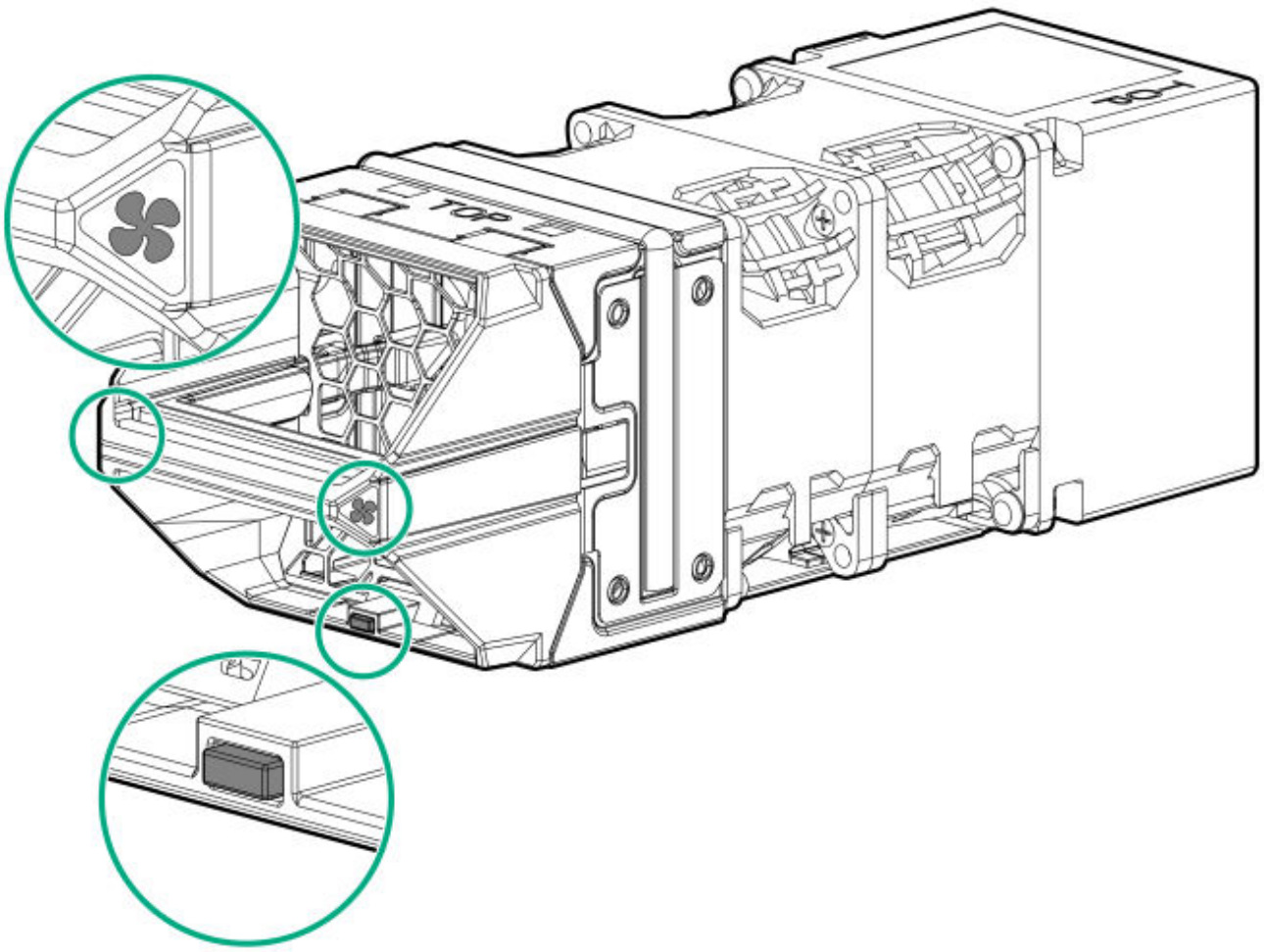

Subtopics

HPE Synergy Fan guidelines

HPE Synergy Fan guidelines

- Installation Guidelines — The HPE Synergy 12000 Frame ships with all 10 fans installed.
- Fan Redundancy — The upper five fan modules (fan bays 1 to 5) and the bottom five fan modules (fan bays 6 to 10) do not share a common plenum. Each group of fan bays cools specific component bays.

  Fans modules in bays 1 to 5 cool the following component bays:

  - Device bays 1 to 6

- Appliance bay 1
- Frame Link Module 1
- Interconnect modules ICM 1, ICM 2, and ICM 3

Fan modules in bays 6 to 10 are used to cool the following component bays:

- Device bays 7 to 12
- Appliance bay 2
- Frame Link Module 2
- Interconnect modules ICM 4, ICM 5, and ICM 6

- All Conditions — For both the upper and lower half of the frame, the five fans provide 4+1 redundancy for cooling under all conditions. Four fans are adequate to cool the components installed into that half of the frame.
- A single fan failure in either (or both) of the two rows of fans will continue to cool all supported configurations of Synergy. A degraded frame alert is generated indicating that a fan has failed and must be serviced.
- If more than one fan fails per row, then a more serious thermal alert is issued and no additional frame devices are allowed to power on.

Interconnect modules

The interconnect modules connect components installed in the device bays to various data center fabrics, enabling the facility to receive, process, and forward data to the destination component.

All interconnect modules have the same form factor and are installed in the rear of the frame.

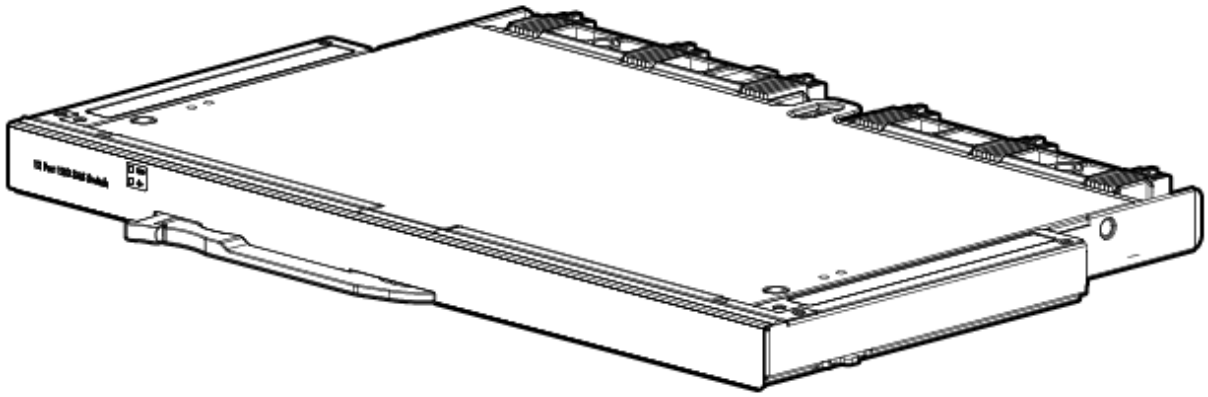

Subtopics

Virtual Connect primary and satellite pairs
Fibre Channel modules
Ethernet modules
Storage modules
Supported mezzanine options
Interconnect module bay numbering
Interconnect module configurations
Interconnect module installation guidelines
Primary interconnect module with interconnect link module configurations

Virtual Connect primary and satellite pairs

The primary module contains networking capabilities that extend connectivity to satellite frames through interconnect link modules. The interconnect link modules are listed directly below the supported primary switch.

Figure 1. HPE Virtual Connect SE 100Gb F32 Module for HPE Synergy (Primary)

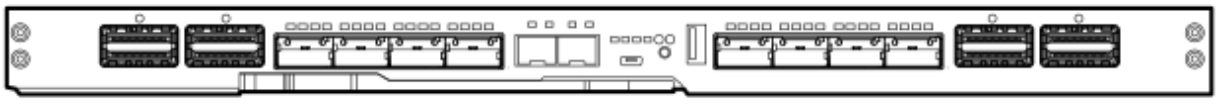

Figure 2. HPE Synergy 50Gb Interconnect Link Module (Satellite)



Figure 3. HPE Virtual Connect SE 40Gb F8 Module for HPE Synergy (Primary)

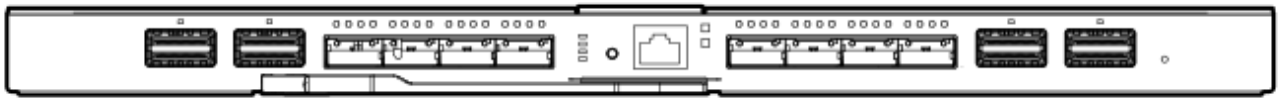

Figure 4. HPE Synergy 10Gb Interconnect Link Module (Satellite)



Figure 5. HPE Synergy 20Gb Interconnect Link Module (Satellite)

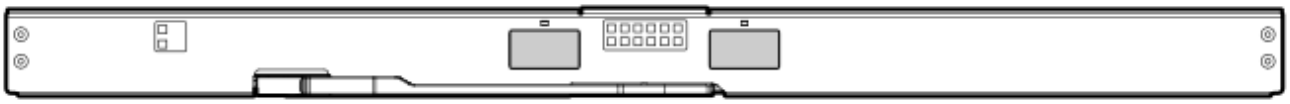

More information

Primary switch with interconnect link module configurations

Fibre Channel modules

Figure 1. HPE Virtual Connect SE 16Gb Fibre Channel Module for HPE Synergy

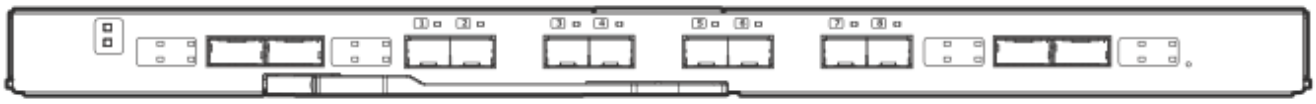

Figure 2. HPE Virtual Connect SE 32Gb FC Module for HPE Synergy

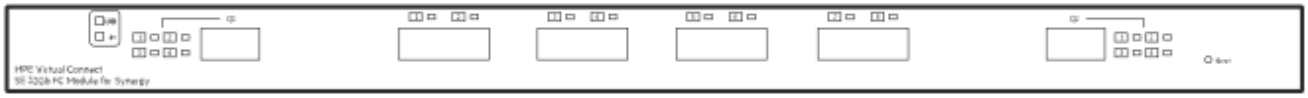

Figure 3. HPE Virtual Connect 64Gb Fibre Channel Module for HPE Synergy

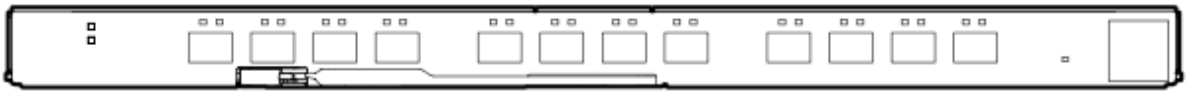

Figure 4. Brocade 16Gb Fibre Channel Switch Module for HPE Synergy

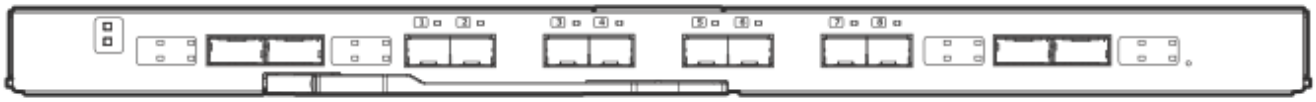

Figure 5. Brocade 32Gb Fibre Channel Switch Module for HPE Synergy



Figure 6. Brocade 64Gb Fibre Channel Switch Module for HPE Synergy

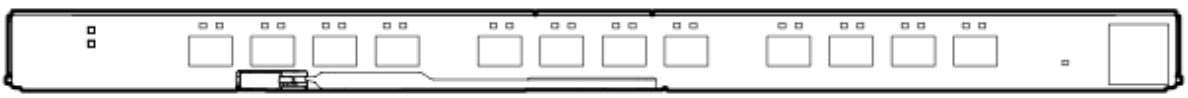

Ethernet modules

Figure 1. Mellanox SH2200 Switch Module for HPE Synergy



Storage modules



When paired with the HPE Synergy 12Gb SAS Connection Module, the HPE Synergy D3940 Storage Module provides composable storage for up to 10 compute modules in a single frame. Each compute module configured to access the HPE Synergy D3940 Storage Module, must be configured with a supported controller. For more information, see the product QuickSpecs at the Hewlett Packard Enterprise website (**https://www.hpe.com/info/qs**).

Supported mezzanine options

HPE Synergy compute modules support various types of mezzanine options or network adapters, providing connectivity when paired with HPE Synergy interconnect modules. For more information about which mezzanine options are supported with each interconnect module, see the interconnect module QuickSpecs at the Hewlett Packard Enterprise website (**https://www.hpe.com/info/qs**).

The information below addresses CNAs, Adapters, HBAs and Storage Controllers and associated compute generations they support.

Converged Network Adapters

- HPE Synergy 2820C 10Gb Converged Network Adapter (for Gen10)

- HPE Synergy 3820C 10/20Gb Converged Network Adapter (for Gen10)
- HPE Synergy 4820C 10/20/25Gb Converged Network Adapter (for Gen10, Gen10 Plus, and Gen11)
- HPE Synergy 6820C 25/50Gb Converged Network Adapter (for Gen10, Gen10 Plus, and Gen11)

Ethernet Adapters

- HPE Synergy 4610C 10/25Gb Ethernet Adapter (for Gen10)
- HPE Synergy 6310C 25/50Gb Ethernet Adapter (for Gen11 and Gen12)
- HPE Synergy 6410C 25/50Gb Ethernet Adapter (for Gen10, Gen10 Plus)
- HPE Synergy 6810C 25/50Gb Ethernet Adapter (for Gen10)

Fibre Channel Host Bus Adapters

- HPE Synergy 7330C 64Gb Fibre Channel Host Bus Adapter (for Gen12)
- HPE Synergy 5830C 32Gb Fibre Channel Host Bus Adapter (for Gen10, Gen10 Plus, and Gen11)
- HPE Synergy 5331C 32Gb Fibre Channel Host Bus Adapter (for Gen12)
- HPE Synergy 5330C 32Gb Fibre Channel Host Bus Adapter (for Gen10, Gen10 Plus, and Gen11)
- HPE Synergy 3830C 16Gb Fibre Channel Host Bus Adapter (for Gen10)
- HPE Synergy 3530C 16Gb Fibre Channel Host Bus Adapter (for Gen10)

Storage Controllers

- HPE SR416ie-m controller, for HPE Synergy 480 Gen11 compute module only
  - Mezzanine slot 1 only
  - Supports internal drive cages
  - Supports HPE Synergy D3940 Storage module
- OCP Interposer Board, for HPE Synergy 480 Gen12 compute module only
  - Mezzanine slot 2 only - no connection to fabric 2
  - Supports HPE MR416i-o Gen11 controller and HPE Synergy 480 Gen12 MR416i-o controller cable kit (with two SlimSAS LP x8 cables and an auxilory power cable

- Uses a HPE Smart Hybrid Capacitor HPE MR416i-o Gen11 controller
- Supports internal OCP drive cages

Interconnect module bay numbering

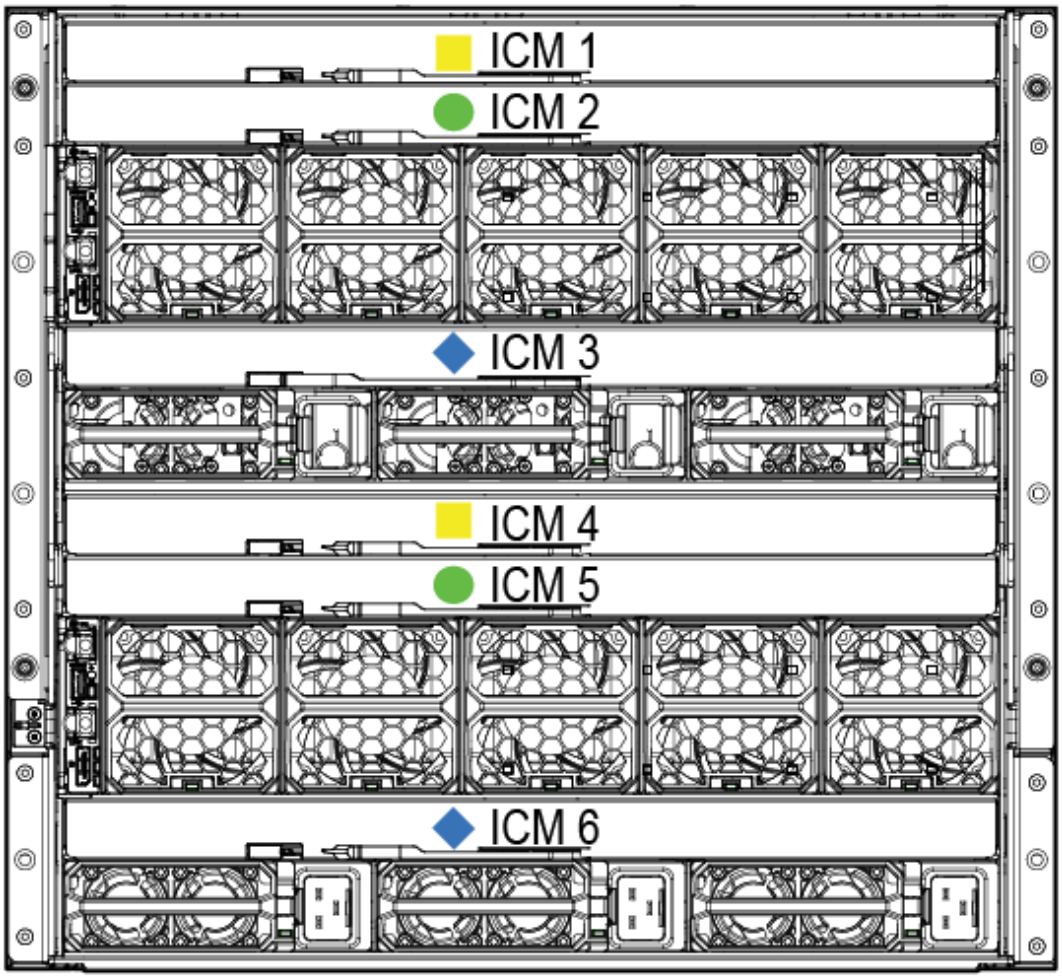

There are multiple configurations for the interconnect modules, and the installation of each interconnect module is dependent on the configuration and fabric.

Compute module signal	Interconnect bay number	Interconnect bay label	Fabric
Mezzanine 1, 4, 7, 10	1 and 4		1

Compute module signal	Interconnect bay number	Interconnect bay label	Fabric
Mezzanine 2, 5, 8	2 and 5		2
Mezzanine 3, 6, 9, 12	3 and 6		3

Interconnect module configurations

The HPE Synergy 12000 Frame supports a pair of redundant interconnect modules for each of the three fabrics. Hewlett Packard Enterprise recommends the following best practices:

- Fabric 1 —Storage
- Fabric 2 —Storage or networking
- Fabric 3 —Networking

Fabric	Usage	ICM Usage Description
Fabric 1 ICM Bays 1 and 4	Storage (Best Practice)	HPE Synergy 12Gb SAS Connection Module
		HPE Virtual Connect SE 32Gb FC Module for HPE Synergy
		Brocade 32Gb FC Fibre Channel Switch Module
		Brocade 64Gb FC Fibre Channel Switch Module
Fabric 2 ICM Bays 2 and 5	Storage	HPE Virtual Connect SE 32Gb FC Module for HPE Synergy
		HPE Virtual Connect SE 64Gb FC Module for HPE Synergy
		HPE Virtual Connect SE 100Gb F32 Module for HPE Synergy
		Brocade 32Gb FC Fibre Channel Switch Module

Fabric	Usage	ICM Usage Description
		Brocade 64Gb FC Fibre Channel Switch Module
	Networking	HPE Synergy 40Gb F8 Switch Module
Fabric 3 ICM Bays 3 and 6	(Best Practice)	HPE Virtual Connect SE 100Gb F32 Module for HPE Synergy
		HPE Synergy 50Gb Interconnect Link Module
		HPE Synergy 10Gb Pass-Thru Module
		Mellanox SH2200 Switch Module for HPE Synergy
		HPE Virtual Connect SE 100Gb F32 Module for HPE Synergy
		Brocade 16Gb Fibre Channel SAN Switch Module for HPE Synergy

Interconnect module installation guidelines

Always adhere to the following guidelines when planning and installing the interconnect modules in HPE Synergy frames:

- The interconnect modules are listed in order of priority from top to bottom within a fabric. For example, if the HPE Synergy 12Gb SAS Connection Module is installed, it is supported only in fabric 1 and therefore, that fabric solution is the first priority for fabric 1. If the HPE Synergy 12Gb SAS Connection Module is not used, then fabric 1 is available to be used by one of the supported HPE Synergy Fibre Channel interconnect modules.
- Both ICM bays within a fabric must contain the same interconnect module, unless the fabric is a Primary/Satellite fabric. In a Primary/Satellite fabric, one or more satellite modules can be used along with a primary module to form a fabric.
- All interconnect link modules that comprise a Primary/Satellite fabric must be installed in the same interconnect bay number as the corresponding primary interconnect module. For example, given a three-frame configuration where the primary interconnect module is installed in ICM bay 3 in one frame, the two satellite interconnect link modules in the second and third frames must also be installed in ICM bay 3.

- For Gen12, the OCP Interposer Board and HPE MR416i-o Gen 11 controller can only be user with Gen 12 compute modules and mezzanine slot 2.

Primary interconnect module with interconnect link module configurations

The following interconnect module can be configured as the primary switch, with interconnect link modules to support the primary interconnect module:

- HPE Virtual Connect SE 100Gb F32 Module for HPE Synergy

From one to four interconnect link modules are required to support the primary interconnect module when using the following interconnect link module:

- HPE Synergy 50Gb Interconnect Link Module in 25G mode

From one to two interconnect link modules are required to support the primary interconnect module when using the following interconnect link module:

- HPE Synergy 50Gb Interconnect Link Module in 50G mode

If redundancy is required, then two primary switches are required per fabric. For the best availability with two or more frames, the two switches or VC modules must be installed in different frames.

As an example of a redundant fabric 3 solution, one interconnect module or VC module would be installed in ICM bay 3 in one frame and the second interconnect module or VC module would be installed in ICM bay 6 in another frame. ICM bays for the particular fabric that do not contain the interconnect modules or VC modules would contain the interconnect link modules, providing redundancy for either an interconnect module failure or frame failure.

The number of interconnect link cables is different depending on your Primary/Satellite configuration:

Primary	Satellite	Number of interconnect link cables
HPE Virtual Connect SE 100Gb F32 Module for HPE Synergy	HPE Synergy 50Gb Interconnect Link Module	1 (for 25Gb speed) 2 (for 50Gb speed)

HPE Synergy Cabling

HPE Synergy requires various types of cabling depending on your configuration. To assist with planning and cabling HPE Synergy, the **HPE Synergy Cabling Guide** provides cabling scenarios and diagrams for the following:

- Management network cabling

  Cabling the management network includes cabling the frame link module LINK ports together to form a management ring (frame link topology) and cabling two frame link module MGMT ports to the management network.

- Interconnect module cabling

  HPE Synergy supports a composable fabric that spans multiple frames and includes primary interconnect modules (switches) and satellite modules (links).

- Power cabling

  HPE Synergy power cabling includes cabling multiple frames for power feed redundant power, cabling power supplies for power feed redundancy, and power cabling for both a single frame and multiple frame configurations.

- HPE Synergy Console cabling

  Direct connections to the HPE Synergy Console are possible by connecting a laptop directly to a frame through the front panel or by connecting KVM to the frame link module.

HPE Synergy documentation

The **HPE Synergy Documentation Map** in the Hewlett Packard Enterprise Support Center provides a comprehensive, one stop location for all HPE Synergy documentation, including installation instructions, maintenance and service guides, best practices, and links to additional resources.

In addition, see the **HPE Synergy Software Release Information** site for firmware updates and software release information.

Specifications

Subtopics

HPE Synergy QuickSpecs

HPE Synergy QuickSpecs

HPE Synergy has system specifications as well as individual product and component specifications. For complete specification information, see the HPE Synergy and individual HPE Synergy product QuickSpecs on the Hewlett Packard Enterprise website (**https://www.hpe.com/info/qs**).

Support and other resources

Subtopics

Accessing Hewlett Packard Enterprise Support
HPE product registration
Accessing updates
Remote support
Warranty information
Regulatory information
Documentation feedback

Accessing Hewlett Packard Enterprise Support

- For live assistance, go to the Contact Hewlett Packard Enterprise Worldwide website:

  https://www.hpe.com/info/assistance

- To access documentation and support services, go to the Hewlett Packard Enterprise Support Center website:

  https://www.hpe.com/support/hpesc

Information to collect

- Technical support registration number (if applicable)
- Product name, model or version, and serial number
- Operating system name and version
- Firmware version
- Error messages
- Product-specific reports and logs
- Add-on products or components
- Third-party products or components

HPE product registration

To gain the full benefits of the Hewlett Packard Enterprise Support Center and your purchased support services, add your contracts and products to your account on the HPESC.

- When you add your contracts and products, you receive enhanced personalization, workspace alerts, insights through the dashboards, and easier management of your environment.
- You will also receive recommendations and tailored product knowledge to self-solve any issues, as well as streamlined case creation for faster time to resolution when you must create a case.

To learn how to add your contracts and products, see **https://www.hpe.com/info/add-products-contracts**.

Accessing updates

- Some software products provide a mechanism for accessing software updates through the product interface. Review your product documentation to identify the recommended software update method.
- To download product updates:

Hewlett Packard Enterprise Support Center

https://www.hpe.com/support/hpesc

My HPE Software Center

https://www.hpe.com/software/hpesoftwarecenter

- To subscribe to eNewsletters and alerts:

  https://www.hpe.com/support/e-updates

- To view and update your entitlements, and to link your contracts and warranties with your profile, go to the Hewlett Packard Enterprise Support Center **More Information on Access to Support Materials** page:

  https://www.hpe.com/support/AccessToSupportMaterials

> **IMPORTANT**
> Access to some updates might require product entitlement when accessed through the Hewlett Packard Enterprise Support Center. You must have an HPE Account set up with relevant entitlements.

Remote support

Remote support is available with supported devices as part of your warranty or contractual support agreement. It provides intelligent event diagnosis, and automatic, secure submission of hardware event notifications to Hewlett Packard Enterprise, which initiates a fast and accurate resolution based on the service level of your product. Hewlett Packard Enterprise strongly recommends that you register your device for remote support.

If your product includes additional remote support details, use search to locate that information.

HPE Get Connected

https://www.hpe.com/services/getconnected

HPE Tech Care Service

https://www.hpe.com/services/techcare

HPE Complete Care Service

https://www.hpe.com/services/completecare

Warranty information

To view the warranty information for your product, see the **warranty check tool**.

Regulatory information

To view the regulatory information for your product, view the Safety and Compliance Information for Server, Storage, Power, Networking, and Rack Products, available at the Hewlett Packard Enterprise Support Center:

https://www.hpe.com/support/Safety-Compliance-EnterpriseProducts

Additional regulatory information

Hewlett Packard Enterprise is committed to providing our customers with information about the chemical substances in our products as needed to comply with legal requirements such as REACH (Regulation EC No 1907/2006 of the European Parliament and the Council). A chemical information report for this product can be found at:

https://www.hpe.com/info/reach

For Hewlett Packard Enterprise product environmental and safety information and compliance data, including RoHS and REACH, see:

https://www.hpe.com/info/ecodata

For Hewlett Packard Enterprise environmental information, including company programs, product recycling, and energy efficiency, see:

https://www.hpe.com/info/environment

Documentation feedback

Hewlett Packard Enterprise is committed to providing documentation that meets your needs. To help us improve the documentation, click the **Feedback** button on the page of an opened document on the Hewlett Packard Enterprise Support Center portal (**https://**

www.hpe.com/support/hpesc). Use this feature to send any errors, suggestions, or comments. This process captures all document information.