HP ProLiant DL100 Series Server User Guide



Part Number 384049-006
March 2009 (Sixth Edition)

© Copyright 2005, 2009 Hewlett-Packard Development Company, L.P.

The information contained herein is subject to change without notice. The only warranties for HP products and services are set forth in the express warranty statements accompanying such products and services. Nothing herein should be construed as constituting an additional warranty. HP shall not be liable for technical or editorial errors or omissions contained herein.

Microsoft, Windows, and Windows Server are U.S. registered trademarks of Microsoft Corporation.

Intended audience

This document is for the person who installs, administers, and troubleshoots servers and storage systems. HP assumes you are qualified in the servicing of computer equipment and trained in recognizing hazards in products with hazardous energy levels.

Contents

Operations 5
Power up the server 5
Power down the server 5
Remove the access panel 5
Setup 7
Optional installation services 7
Optimum environment 7
Space and airflow requirements 7
Temperature requirements 8
Power requirements 9
Electrical grounding requirements 9
Rack warnings 9
Installing hardware options 10
Installing the server into the rack 10
Powering up and configuring the server 10
Installing the operating system 10
Registering the server 11
Hardware options installation 12
Introduction 12
Processor option 12
Optical drive option 12
Memory options 12
PCI I/O device option 12
Hard drive options 13
Hard drive backplane options 13
Power supply options 13
HP Trusted Platform Module option 13
Installing the Trusted Platform Module board 14
Retaining the recovery key/password 15
Enabling the Trusted Platform Module 15
Software and configuration utilities 16
ROMPaq utility 16
Lights-Out 100i Remote Management 16
HP Insight Diagnostics 16
Drivers 16
Updating firmware 16
Troubleshooting 17
Common problem resolution 17
Loose connections 17
Service notifications 17
Problem diagnosis 17
Important safety information 18
Preparing the server for diagnosis 20

Symptom information 20
Diagnostic steps 20
Hardware problems 31
Hardware problems 31
Contacting HP 48
Software tools and solutions 53
Introduction to software problems 53
Firmware maintenance 56
Battery replacement 58
Regulatory compliance notices 60
Regulatory compliance identification numbers 60
Federal Communications Commission notice 60
FCC rating label 60
Class A equipment 60
Class B equipment 60
Declaration of conformity for products marked with the FCC logo, United States only 61
Modifications 61
Cables 61
Canadian notice (Avis Canadien) 62
European Union regulatory notice 62
Disposal of waste equipment by users in private households in the European Union 62
Japanese notice 63
BSMI notice 63
Korean notice 63
Chinese notice 64
Laser compliance 64
Battery replacement notice 64
Taiwan battery recycling notice 65
Power cord statement for Japan 65
Acoustics statement for Germany (Geräuschemission) 65
Electrostatic discharge 66
Preventing electrostatic discharge 66
Grounding methods to prevent electrostatic discharge 66
Technical support 67
Before you contact HP 67
HP contact information 67
Customer Self Repair 67
Acronyms and abbreviations 75
Index 79

Operations

Power up the server

To power up the server, press the Power On button.

Power down the server

WARNING: To reduce the risk of personal injury, electric shock, or damage to the equipment, remove the power cord to remove power from the server. The front panel Power On button does not completely shut off system power. Portions of the power supply and some internal circuitry remain active until AC power is removed.

IMPORTANT: If installing a hot-plug device, it is not necessary to power down the server.

1. Shut down the operating system as directed by the operating system documentation.
2. Press the Power On button to place the server in standby mode. When the server activates standby power mode, the system power LED changes from green to off.
3. Disconnect the power cords.

The system is now without power.

Remove the access panel

1. Power down the server (on page 5).
2. Extend and remove the server from the rack.
3. Remove the access panel:
   a. Loosen the thumbscrew or remove the screw that secures the access panel.
   b. Slide the access panel back about 1.5 cm (0.5 in).
   c. Lift and remove the access panel.

NOTE: The server may look different from that shown.

- 1U server

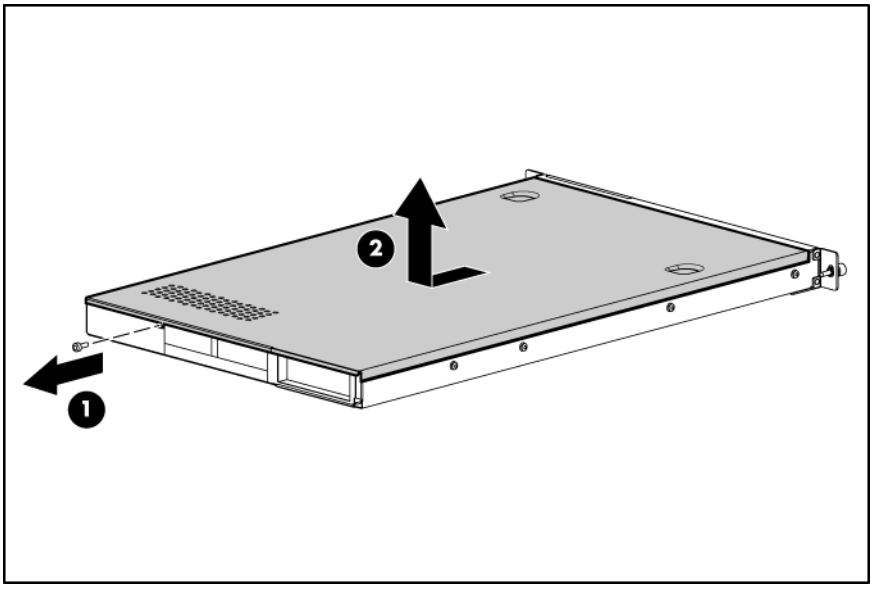

- 2U server

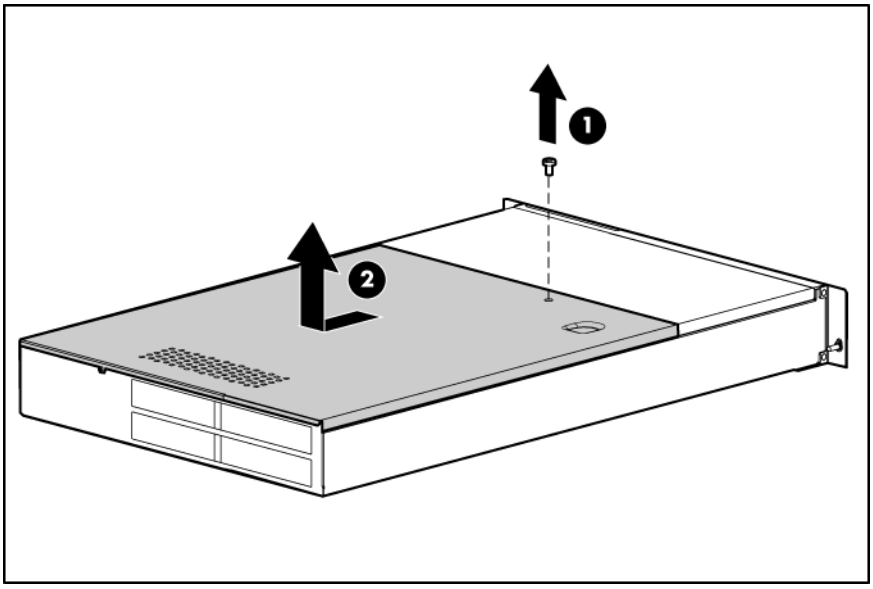

To replace the component, reverse the removal procedure.

Setup

Optional installation services

Delivered by experienced, certified engineers, HP Care Pack services help you keep your servers up and running with support packages tailored specifically for HP ProLiant systems. HP Care Packs let you integrate both hardware and software support into a single package. A number of service level options are available to meet your needs.

HP Care Pack Services offer upgraded service levels to expand the standard product warranty with easy-to-buy, easy-to-use support packages that help you make the most of your server investments. Some of the Care Pack services are:

- Hardware support
  - 6-hour call-to-repair
  - 4-hour 24x7 same day
  - 4-hour same business day
- Software support
  - Microsoft®
  - Linux
- Integrated hardware and software support
  - Critical Service
  - Proactive 24
  - Support Plus
  - Support Plus 24
- Startup and implementation services for both hardware and software

For more information on Care Packs, refer to the HP website (http://www.hp.com/hps/carepack/servers/cp_proliant.html).

Optimum environment

When installing the server, select a location that meets the environmental standards described in this section.

Space and airflow requirements

To allow for servicing and adequate airflow, observe the following space and airflow requirements when deciding where to install a rack:

- Leave a minimum clearance of 63.5 cm (25 in) in front of the rack.
- Leave a minimum clearance of 76.2 cm (30 in) behind the rack.

- Leave a minimum clearance of 121.9 cm (48 in) from the back of the rack to the back of another rack or row of racks.

HP servers draw in cool air through the front door and expel warm air through the rear door. Therefore, the front and rear rack doors must be adequately ventilated to allow ambient room air to enter the cabinet, and the rear door must be adequately ventilated to allow the warm air to escape from the cabinet.

CAUTION: To prevent improper cooling and damage to the equipment, do not block the ventilation openings.

When vertical space in the rack is not filled by a server or rack component, the gaps between the components cause changes in airflow through the rack and across the servers. Cover all gaps with blanking panels to maintain proper airflow.

CAUTION: Always use blanking panels to fill empty vertical spaces in the rack. This arrangement ensures proper airflow. Using a rack without blanking panels results in improper cooling that can lead to thermal damage.

The 9000 and 10000 Series Racks provide proper server cooling from flow-through perforations in the front and rear doors that provide 64 percent open area for ventilation.

CAUTION: When using a Compaq branded 7000 Series rack, you must install the high airflow rack door insert [P/N 327281-B21 (42U) or P/N 157847-B21 (22U)] to provide proper front-to-back airflow and cooling.

CAUTION: If a third-party rack is used, observe the following additional requirements to ensure adequate airflow and to prevent damage to the equipment:

- Front and rear doors—If the 42U rack includes closing front and rear doors, you must allow 5,350 sq cm (830 sq in) of holes evenly distributed from top to bottom to permit adequate airflow (equivalent to the required 64 percent open area for ventilation).
- Side—The clearance between the installed rack component and the side panels of the rack must be a minimum of 7 cm (2.75 in).

Temperature requirements

To ensure continued safe and reliable equipment operation, install or position the system in a well-ventilated, climate-controlled environment.

The maximum recommended ambient operating temperature (TMRA) for most server products is 35°C (95°F). The temperature in the room where the rack is located must not exceed 35°C (95°F).

CAUTION: To reduce the risk of damage to the equipment when installing third-party options:

- Do not permit optional equipment to impede airflow around the server or to increase the internal rack temperature beyond the maximum allowable limits.
- Do not exceed the manufacturer's TMRA.

Power requirements

Installation of this equipment must comply with local and regional electrical regulations governing the installation of information technology equipment by licensed electricians. This equipment is designed to operate in installations covered by NFPA 70, 1999 Edition (National Electric Code) and NFPA-75, 1992 (code for Protection of Electronic Computer/Data Processing Equipment). For electrical power ratings on options, refer to the product rating label or the user documentation supplied with that option.

⚠ **WARNING:** To reduce the risk of personal injury, fire, or damage to the equipment, do not overload the AC supply branch circuit that provides power to the rack. Consult the electrical authority having jurisdiction over wiring and installation requirements of your facility.

⚠ **CAUTION:** Protect the server from power fluctuations and temporary interruptions with a regulating uninterruptible power supply (UPS). This device protects the hardware from damage caused by power surges and voltage spikes and keeps the system in operation during a power failure.

When installing more than one server, you may need to use additional power distribution devices to safely provide power to all devices. Observe the following guidelines:

- Balance the server power load between available AC supply branch circuits.
- Do not allow the overall system AC current load to exceed 80 percent of the branch circuit AC current rating.
- Do not use common power outlet strips for this equipment.
- Provide a separate electrical circuit for the server.

Electrical grounding requirements

The server must be grounded properly for proper operation and safety. In the United States, you must install the equipment in accordance with NFPA 70, 1999 Edition (National Electric Code), Article 250, as well as any local and regional building codes. In Canada, you must install the equipment in accordance with Canadian Standards Association, CSA C22.1, Canadian Electrical Code. In all other countries, you must install the equipment in accordance with any regional or national electrical wiring codes, such as the International Electrotechnical Commission (IEC) Code 364, parts 1 through 7. Furthermore, you must be sure that all power distribution devices used in the installation, such as branch wiring and receptacles, are listed or certified grounding-type devices.

Because of the high ground-leakage currents associated with multiple servers connected to the same power source, HP recommends the use of a PDU that is either permanently wired to the building's branch circuit or includes a nondetachable cord that is wired to an industrial-style plug. NEMA locking-style plugs or those complying with IEC 60309 are considered suitable for this purpose. Using common power outlet strips for the server is not recommended.

Rack warnings

⚠ **WARNING:** To reduce the risk of personal injury or damage to the equipment, be sure that:

- The leveling jacks are extended to the floor.
- The full weight of the rack rests on the leveling jacks.
- The stabilizing feet are attached to the rack if it is a single-rack installation.
- The racks are coupled together in multiple-rack installations.
- Only one component is extended at a time. A rack may become unstable if more than one component is extended for any reason.

⚠ **WARNING:** To reduce the risk of personal injury or equipment damage when unloading a rack:

- At least two people are needed to safely unload the rack from the pallet. An empty 42U rack can weigh as much as 115 kg (253 lb), can stand more than 2.1 m (7 ft) tall, and may become unstable when being moved on its casters.
- Never stand in front of the rack when it is rolling down the ramp from the pallet. Always handle the rack from both sides.

Installing hardware options

Install any hardware options before initializing the server. For options installation information, refer to the option documentation. For server-specific information, refer to "Hardware options installation (on page 12)."

Installing the server into the rack

Refer to the installation instructions that ship with the rack kit to install the server into the rack.

Powering up and configuring the server

To power up the server, press the Power On/Standby button.

For detailed information on configuring the server, see the server installation sheet.

Installing the operating system

To operate properly, the server must have a supported operating system. For the latest information on supported operating systems, see the HP website (http://www.hp.com/go/supportos).

To install an operating system on the server, insert the operating system CD into the optional optical drive and reboot the server. This process may require you to obtain additional drivers from the Support CD shipped with the server or the CD that shipped with the option. Any drivers that require a diskette for installation will require an optional USB diskette drive. The drivers may have updates that are available on the HP website (http://www.hp.com/support).

Follow the on-screen instructions to begin the installation process.

Registering the server

To register the server, refer to the HP Registration website (http://register.hp.com).

Hardware options installation

Introduction

If more than one option is being installed, read the installation instructions for all the hardware options and identify similar steps to streamline the installation process.

For HP-supported options, refer to the Quickspecs on the HP website (http://www.hp.com/servers/proliant).

WARNING: To reduce the risk of personal injury from hot surfaces, allow the drives and the internal system components to cool before touching them.

CAUTION: To prevent damage to electrical components, properly ground the server before beginning any installation procedure. Improper grounding can cause electrostatic discharge.

CAUTION: Before installing any options, power down the server to prevent damage to the server and the equipment ("Power down the server" on page 5).

Processor option

For server-specific processor installation instructions, refer to the installation instructions included with the processor option kit.

CAUTION: To prevent possible server malfunction and damage to the equipment, do not mix processors of different types or speeds.

Optical drive option

For server-specific optical drive installation instructions, see the installation sheet included with the option kit.

Memory options

For server-specific memory installation guidelines, refer to the installation sheet included with the server.

PCI I/O device option

For server-specific PCI I/O device installation instructions, see the installation instructions included with the PCI I/O device option kit.

Hard drive options

For server-specific hard drive installation instructions, refer to the installation sheet included with the server.

Hard drive backplane options

For server-specific hard drive backplane installation instructions, see the installation sheet included with the server.

Power supply options

For server-specific power supply installation instructions, see the installation sheet included with the server.

HP Trusted Platform Module option

Use these instructions to install and enable a TPM on a supported server. This procedure includes three sections:

1. Installing the Trusted Platform Module board (on page 14).
2. Retaining the recovery key/password (on page 15).
3. Enabling the Trusted Platform Module (on page 15).

TPM installation requires the use of drive encryption technology, such as the Microsoft® Windows® BitLocker™ Drive Encryption feature. For more information on BitLocker™, see the Microsoft website (http://www.microsoft.com).

△ **CAUTION:** Always observe the guidelines in this document. Failure to follow these guidelines can cause hardware damage or halt data access.

When installing or replacing a TPM, observe the following guidelines:

- Do not remove an installed TPM. Once installed, the TPM becomes a permanent part of the system board.
- When installing or replacing hardware, HP service providers cannot enable the TPM or the encryption technology. For security reasons, only the customer can enable these features.
- When returning a system board for service replacement, do not remove the TPM from the system board. When requested, HP Service provides a TPM with the spare system board.
- Any attempt to remove an installed TPM from the system board breaks or disfigures the TPM security rivet. Upon locating a broken or disfigured rivet on an installed TPM, administrators should consider the system compromised and take appropriate measures to ensure the integrity of the system data.
- When using BitLocker™, always retain the recovery key/password. The recovery key/password is required to enter Recovery Mode after BitLocker™ detects a possible compromise of system integrity.
- HP is not liable for blocked data access caused by improper TPM use. For operating instructions, see the encryption technology feature documentation provided by the operating system.

Installing the Trusted Platform Module board

WARNING: To reduce the risk of personal injury, electric shock, or damage to the equipment, remove the power cord to remove power from the server. The front panel Power On/Standby button does not completely shut off system power. Portions of the power supply and some internal circuitry remain active until AC power is removed.

WARNING: To reduce the risk of personal injury from hot surfaces, allow the drives and the internal system components to cool before touching them.

1. Power down the server.
2. Remove the server from the rack, if necessary.
3. Place the server on a flat, level work surface.
4. Remove the access panel (on page 5).
5. Access the TPM connector. See the server-specific installation sheet.

CAUTION: Any attempt to remove an installed TPM from the system board breaks or disfigures the TPM security rivet. Upon locating a broken or disfigured rivet on an installed TPM, administrators should consider the system compromised and take appropriate measures to ensure the integrity of the system data.

6. Install the TPM board. Press down on the connector to seat the board.

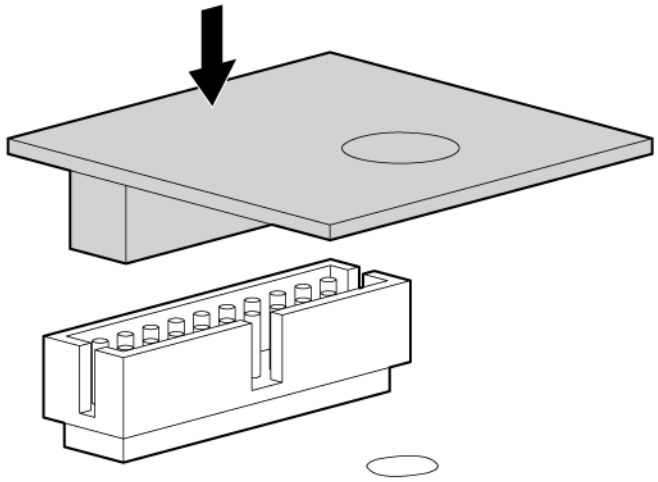

7. Install the TPM security rivet by pressing the rivet firmly into the system board.

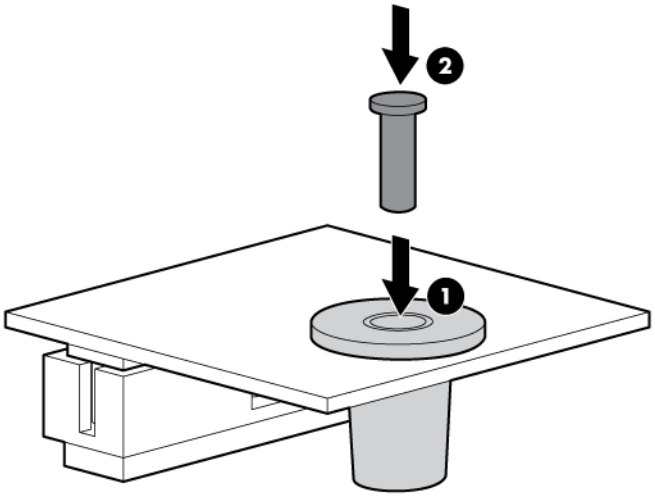

8. Install any components removed to access the TPM connector.
9. Install the access panel.
10. Install the server into the rack ("Installing the server into the rack" on page 10).
11. Power up the server (on page 5).

Retaining the recovery key/password

The recovery key/password is generated during BitLocker™ setup, and can be saved and printed after BitLocker™ is enabled. When using BitLocker™, always retain the recovery key/password. The recovery key/password is required to enter Recovery Mode after BitLocker™ detects a possible compromise of system integrity.

To help ensure maximum security, observe the following guidelines when retaining the recovery key/password:

- Always store the recovery key/password in multiple locations.
- Always store copies of the recovery key/password away from the server.
- Do not save the recovery key/password on the encrypted hard drive.

Enabling the Trusted Platform Module

Press the F10 key to access BIOS Setup. See the BIOS setup information for the specific procedure to enable the TPM on a ProLiant 100 Series server.

△ **CAUTION:** When a TPM is installed and enabled on the server, data access is locked if you fail to follow the proper procedures for updating the system or option firmware, replacing the system board, replacing a hard drive, or modifying OS application TPM settings.

For more information on firmware updates and hardware procedures, see the *HP Trusted Platform Module Best Practices White Paper* on the HP website (http://www.hp.com/support).

For more information on adjusting TPM usage in BitLocker™, see the Microsoft website (http://technet.microsoft.com/en-us/windowsvista/aa905065.aspx).

Software and configuration utilities

ROMPaq utility

The ROMPaq utility enables you to upgrade the system firmware (BIOS) or Lights-Out 100 firmware. To upgrade the firmware, insert a ROMPaq diskette into the diskette drive or ROMPaq USB Key into an available USB port and boot the system.

The ROMPaq utility checks the system and provides a choice (if more than one exists) of available firmware revisions.

For more information about the ROMPaq utility, see the HP website (http://www.hp.com/go/support).

Lights-Out 100i Remote Management

The server supports Lights-Out 100i Remote Management functionality. For more information, see the server-specific information on the HP website (http://www.hp.com/servers/proliant).

HP Insight Diagnostics

The HP Insight Diagnostics utility displays information about the server hardware and tests the system to be sure it is operating properly. The utility has online help and can be accessed using the Insight Diagnostics CD or at the HP website (http://www.hp.com/support).

Drivers

HP drivers and utilities can be found on the Support CD. For the latest drivers and information on supported operating systems, refer to the HP website (http://www.hp.com/support).

IMPORTANT: Always perform a backup before installing or updating device drivers.

Updating firmware

To update the server firmware (BIOS or BMC), use the ROMPaq utility (on page 16).

Troubleshooting

Common problem resolution

Loose connections (on page 17)

Service notifications (on page 17)

Loose connections

Action:

- Be sure all power cords are securely connected.
- Be sure all cables are properly aligned and securely connected for all external and internal components.
- Remove and check all data and power cables for damage. Be sure no cables have bent pins or damaged connectors.
- If a fixed cable tray is available for the server, be sure the cords and cables connected to the server are routed correctly through the tray.
- Be sure each device is properly seated. Avoid bending or flexing circuit boards when reseating components.
- If a device has latches, be sure they are completely closed and locked.
- Check any interlock or interconnect LEDs that may indicate a component is not connected properly.
- If problems continue to occur, remove and reinstall each device, checking the connectors and sockets for bent pins or other damage.

Service notifications

To find out the latest service notifications, refer to the HP website (http://www.hp.com/products/servers/platforms). Select the appropriate server model, and then click the **Documentation** link on the product page.

Problem diagnosis

This section covers the steps to take in order to diagnose a problem quickly.

To effectively troubleshoot a problem, HP recommends that you start with the first flowchart in this section, "Start diagnosis flowchart (on page 21)," and follow the appropriate diagnostic path. If the other flowcharts do not provide a troubleshooting solution, follow the diagnostic steps in "General diagnosis flowchart (on page 22)." The General diagnosis flowchart is a generic troubleshooting process to be used when the problem is not server-specific or is not easily categorized into the other flowcharts.

IMPORTANT: This guide provides information for multiple servers. Some information may not apply to the server you are troubleshooting. Refer to the server documentation for information on procedures, hardware options, software tools, and operating systems supported by the server.

WARNING: To avoid potential problems, ALWAYS read the warnings and cautionary information in the server documentation before removing, replacing, reseating, or modifying system components.

Important safety information

Familiarize yourself with the safety information in the following sections before troubleshooting the server.

Important safety information

Before servicing this product, read the *Important Safety Information* document provided with the server.

Symbols on equipment

The following symbols may be placed on equipment to indicate the presence of potentially hazardous conditions.



This symbol indicates the presence of hazardous energy circuits or electric shock hazards. Refer all servicing to qualified personnel.

WARNING: To reduce the risk of injury from electric shock hazards, do not open this enclosure. Refer all maintenance, upgrades, and servicing to qualified personnel.



This symbol indicates the presence of electric shock hazards. The area contains no user or field serviceable parts. Do not open for any reason.

WARNING: To reduce the risk of injury from electric shock hazards, do not open this enclosure.



This symbol on an RJ-45 receptacle indicates a network interface connection.

WARNING: To reduce the risk of electric shock, fire, or damage to the equipment, do not plug telephone or telecommunications connectors into this receptacle.

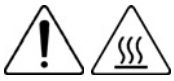

This symbol indicates the presence of a hot surface or hot component. If this surface is contacted, the potential for injury exists.

WARNING: To reduce the risk of injury from a hot component, allow the surface to cool before touching.



This symbol indicates that the component exceeds the recommended weight for one individual to handle safely.

11.33 - 26.30 kg

25 - 58 lb

WARNING: To reduce the risk of personal injury or damage to the equipment, observe local occupational health and safety requirements and guidelines for manual material handling.



These symbols, on power supplies or systems, indicate that the equipment is supplied by multiple sources of power.

WARNING: To reduce the risk of injury from electric shock, remove all power cords to completely disconnect power from the system.

Warnings and cautions

WARNING: Only authorized technicians trained by HP should attempt to repair this equipment. All troubleshooting and repair procedures are detailed to allow only subassembly/module-level repair. Because of the complexity of the individual boards and subassemblies, no one should attempt to make repairs at the component level or to make modifications to any printed wiring board. Improper repairs can create a safety hazard.

WARNING: To reduce the risk of personal injury or damage to the equipment, be sure that:

- The leveling feet are extended to the floor.
- The full weight of the rack rests on the leveling feet.
- The stabilizing feet are attached to the rack if it is a single-rack installation.
- The racks are coupled together in multiple-rack installations.
- Only one component is extended at a time. A rack may become unstable if more than one component is extended for any reason.

WARNING: To reduce the risk of electric shock or damage to the equipment:

- Do not disable the power cord grounding plug. The grounding plug is an important safety feature.
- Plug the power cord into a grounded (earthed) electrical outlet that is easily accessible at all times.
- Unplug the power cord from the power supply to disconnect power to the equipment.
- Do not route the power cord where it can be walked on or pinched by items placed against it. Pay particular attention to the plug, electrical outlet, and the point where the cord extends from the server.



11.33 - 26.30 kg

25 - 58 lb

WARNING: To reduce the risk of personal injury or damage to the equipment:

- Observe local occupation health and safety requirements and guidelines for manual handling.
- Obtain adequate assistance to lift and stabilize the chassis during installation or removal.
- The server is unstable when not fastened to the rails.
- When mounting the server in a rack, remove the power supplies and any other removable module to reduce the overall weight of the product.

CAUTION: To properly ventilate the system, you must provide at least 7.6 cm (3.0 in) of clearance at the front and back of the server.

△ **CAUTION:** The server is designed to be electrically grounded (earthed). To ensure proper operation, plug the AC power cord into a properly grounded AC outlet only.

Preparing the server for diagnosis

1. Be sure the server is in the proper operating environment with adequate power, air conditioning, and humidity control. Refer to the server documentation for required environmental conditions.
2. Record any error messages displayed by the system.
3. Remove all diskettes and CDs from the media drives.
4. Power down the server and peripheral devices if you will be diagnosing the server offline. Always perform an orderly shutdown, if possible. This means you must:
   a. Exit any applications.
   b. Exit the operating system.
   c. Power down the server (on page 5).
5. Disconnect any peripheral devices not required for testing (any devices not necessary to power up the server). Do not disconnect the printer if you want to use it to print error messages.
6. Collect all tools and utilities, such as a Torx screwdriver, loopback adapters, ESD wrist strap, and software utilities, necessary to troubleshoot the problem.

   HP recommends you have access to the server documentation for server-specific information.

Symptom information

Before troubleshooting a server problem, collect the following information:

- What events preceded the failure? After which steps does the problem occur?
- What has been changed since the time the server was working?
- Did you recently add or remove hardware or software? If so, did you remember to change the appropriate settings in the server setup utility, if necessary?
- How long has the server exhibited problem symptoms?
- If the problem occurs randomly, what is the duration or frequency?

To answer these questions, the following information may be useful:

- Run HP Insight Diagnostics (on page 16) and use the survey page to view the current configuration or to compare it to previous configurations.
- Refer to your hardware and software records for information.
- Refer to server LEDs and their statuses.

Diagnostic steps

To effectively troubleshoot a problem, HP recommends that you start with the first flowchart in this section, "Start diagnosis flowchart (on page 21)," and follow the appropriate diagnostic path. If the other flowcharts do not provide a troubleshooting solution, follow the diagnostic steps in "General diagnosis flowchart (on page 22)." The General diagnosis flowchart is a generic troubleshooting process to be used when the problem is not server-specific or is not easily categorized into the other flowcharts.

The available flowcharts include:

- Start diagnosis flowchart (on page 21)
- General diagnosis flowchart (on page 22)
- Power-on problems flowchart (on page 24)
- POST problems flowchart (on page 26)
- OS boot problems flowchart (on page 28)
- Server fault indications flowchart (on page 29)

The number contained in parentheses in the flowchart boxes corresponds to a table with references to other detailed documents or troubleshooting instructions.

Start diagnosis flowchart

Use the following flowchart and table to start the diagnostic process.

Item	See
1	"General diagnosis flowchart (on page 22)"
2	"Power-on problems flowchart (on page 24)"
3	"POST problems flowchart (on page 26)"
4	"OS boot problems flowchart (on page 28)"
5	"Server fault indications flowchart (on page 29)"

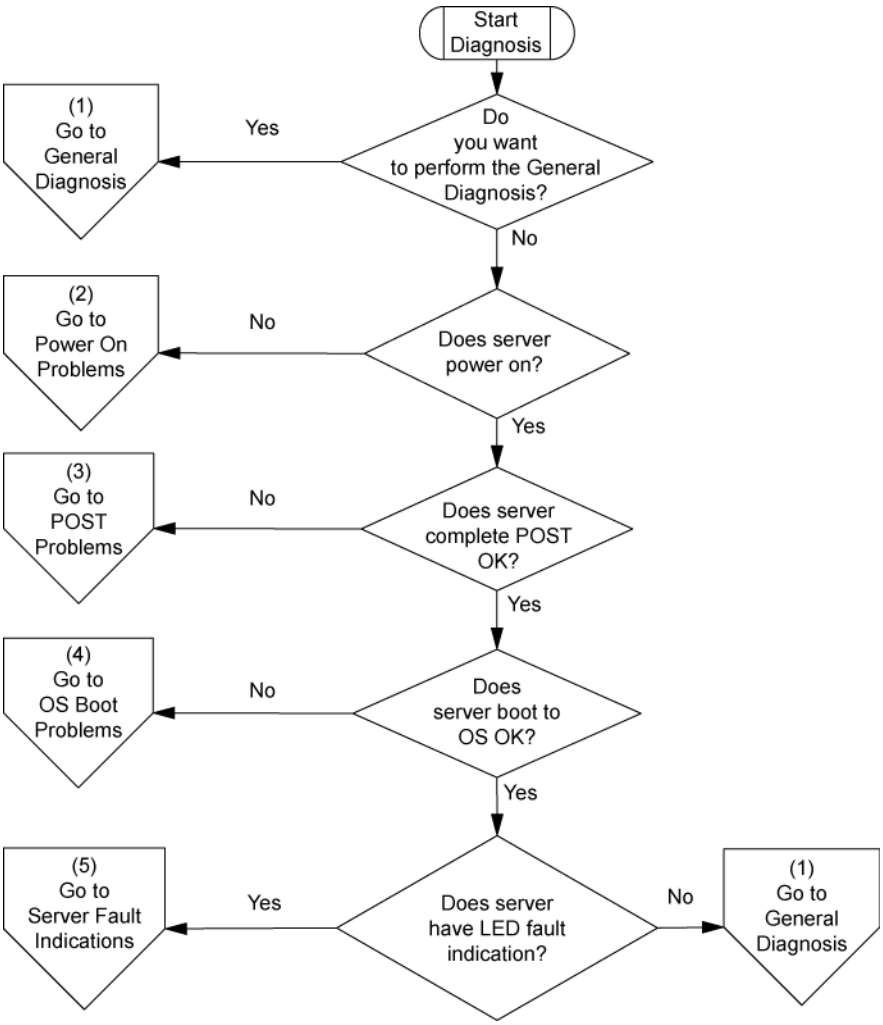

General diagnosis flowchart

The General Diagnosis flowchart provides a generic approach to troubleshooting. If you are unsure of the problem, or if the other flowcharts do not correct the problem, use the following flowchart.

Item	See
1	"Symptom information (on page 20)"
2	"Loose connections (on page 17)"
3	"Service notifications (on page 17)"
4	The most recent version of a particular server or option firmware is available on the following websites: • HP Support website (http://www.hp.com/support) • HP ROM-BIOS/Firmware Updates website (http://h18023.www1.hp.com/support/files/server/us/romflash.html)
5	"General memory problems are occurring (on page 39)"

Item	See
6	• Server maintenance and service guide, located on the Support CD or the HP website (http://www.hp.com/products/servers/platforms) • "Hardware problems (on page 31, on page 31)" • Server maintenance and service guide, located on the Support CD or the HP website (http://www.hp.com/products/servers/platforms)
7	• Server maintenance and service guide, located on the Support CD or the HP website (http://www.hp.com/products/servers/platforms) • "Hardware problems (on page 31, on page 31)"
8	• "Server information you need (on page 48)" • "Operating system information you need (on page 49)"
9	"HP contact information (on page 67)"

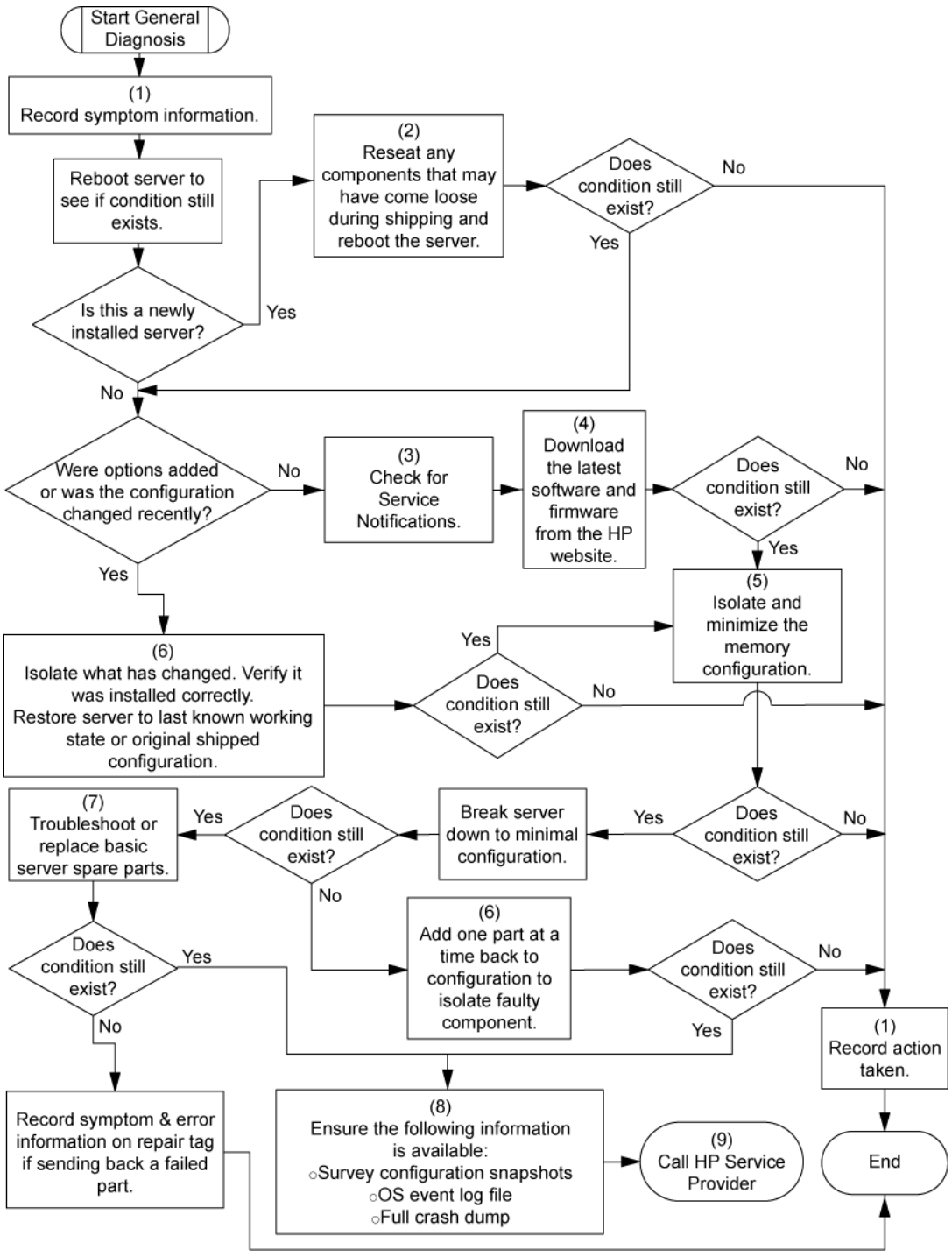

Power-on problems flowchart

Symptoms:

- The server does not power on.
- The system power LED is off or amber.

NOTE: For the location of server LEDs and information on their statuses, refer to the server documentation.

Possible causes:

- Improperly seated or faulty power supply
- Loose or faulty power cord
- Power source problem
- Power on circuit problem
- Improperly seated component or interlock problem
- Faulty internal component

Item	See
1	Server maintenance and service guide, located on the Support CD or the HP website (http://www.hp.com/products/servers/platforms)
2	"General diagnosis flowchart (on page 22)"
3	"Loose connections (on page 17)"
4	"Power source problems (on page 31)"
5	• "Power supply problems (on page 31)" • Server maintenance and service guide, located on the Support CD or the HP website (http://www.hp.com/products/servers/platforms)
6	"System open circuits and short circuits (on page 41)"

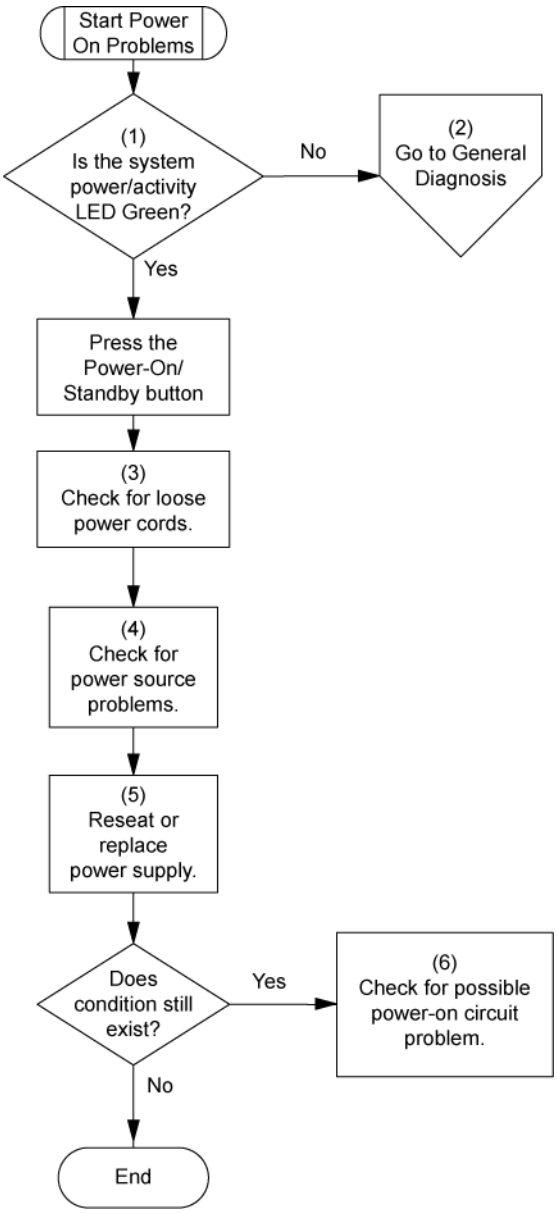

POST problems flowchart

Symptoms:

- Server does not complete POST

  NOTE: The server has completed POST when the system attempts to access the boot device.

- Server completes POST with errors

Possible problems:

- Improperly seated or faulty internal component
- Faulty KVM device
- Faulty video device

Item	See
1	Server maintenance and service guide, located on the Support CD or the HP website (http://www.hp.com/products/servers/platforms)
2	"Loose connections (on page 17)"
3	"General memory problems are occurring (on page 39)"
4	• "Hardware problems (on page 31, on page 31)" • Server maintenance and service guide, located on the Support CD or the HP website (http://www.hp.com/products/servers/platforms)
5	"Symptom information (on page 20)"
6	• "Server information you need (on page 48)" • "Operating system information you need (on page 49)"
7	"HP contact information (on page 67)"

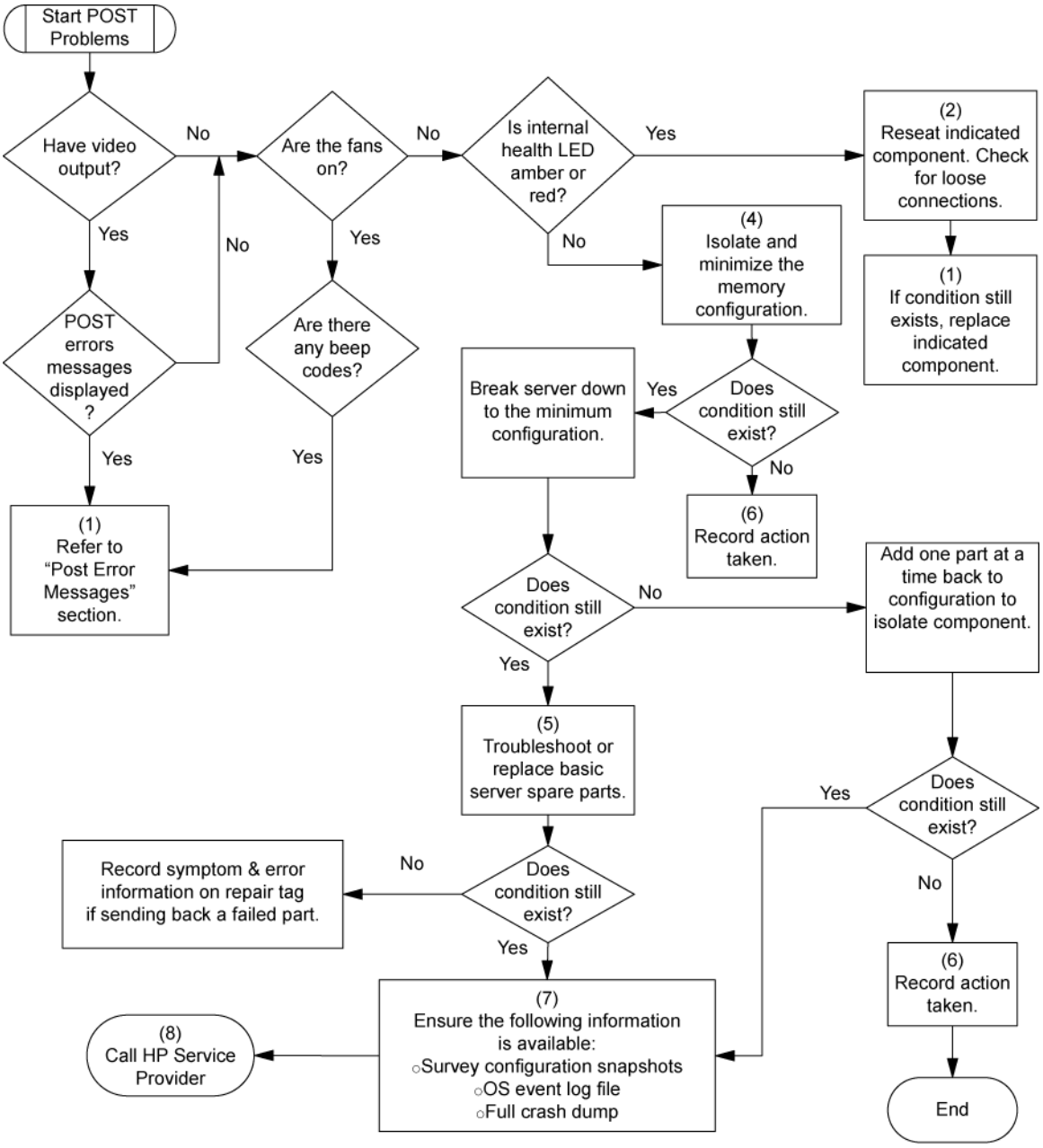

OS boot problems flowchart

Symptom: Server does not boot a previously installed operating system.

Possible causes:

- Corrupted operating system
- Hard drive subsystem problem

Item	See
1	"HP Insight Diagnostics (on page 16)"
2	• "Operating system problems (on page 53)" • "HP contact information (on page 67)"

Item	See
3	"General memory problems are occurring (on page 39)"
4	• "Hardware problems (on page 31, on page 31)" • Server maintenance and service guide, located on the Support CD or the HP website (http://www.hp.com/products/servers/platforms)
5	"General diagnosis flowchart (on page 22)"

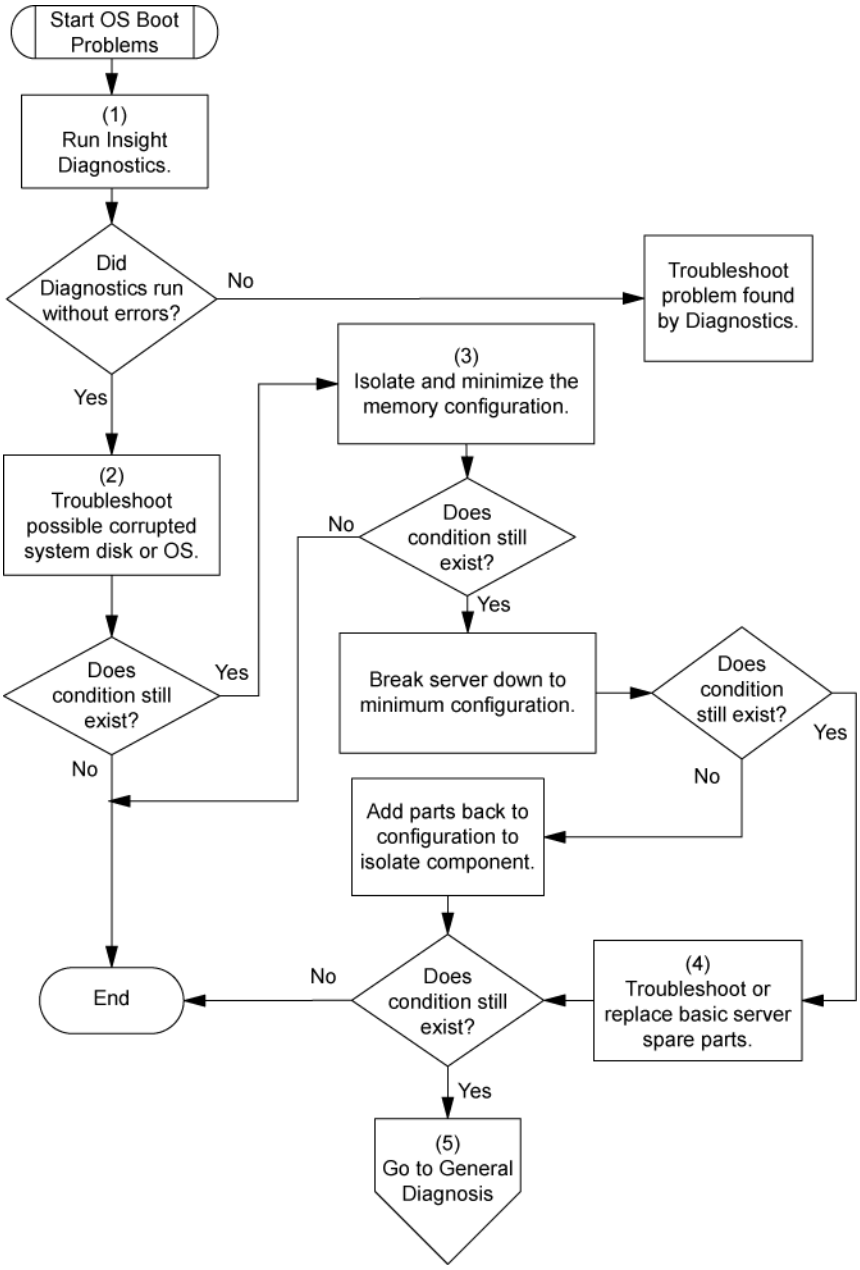

Server fault indications flowchart

Symptom: Server boots, but the internal health LED or external health LED is red or amber.

NOTE: For the location of server LEDs and information on their statuses, refer to the server documentation.

Possible causes:

- Improperly seated or faulty internal or external component
- Unsupported component installed
- Redundancy failure
- System overtemperature condition

Item	See
1	Server maintenance and service guide, located on the Support CD or the HP website (http://www.hp.com/products/servers/platforms)
2	"Power-on problems flowchart (on page 24)"
3	"HP Insight Diagnostics (on page 16)"
4	• "Hardware problems (on page 31, on page 31)" • Server maintenance and service guide, located on the Support CD or the HP website (http://www.hp.com/products/servers/platforms)
5	"HP contact information (on page 67)"

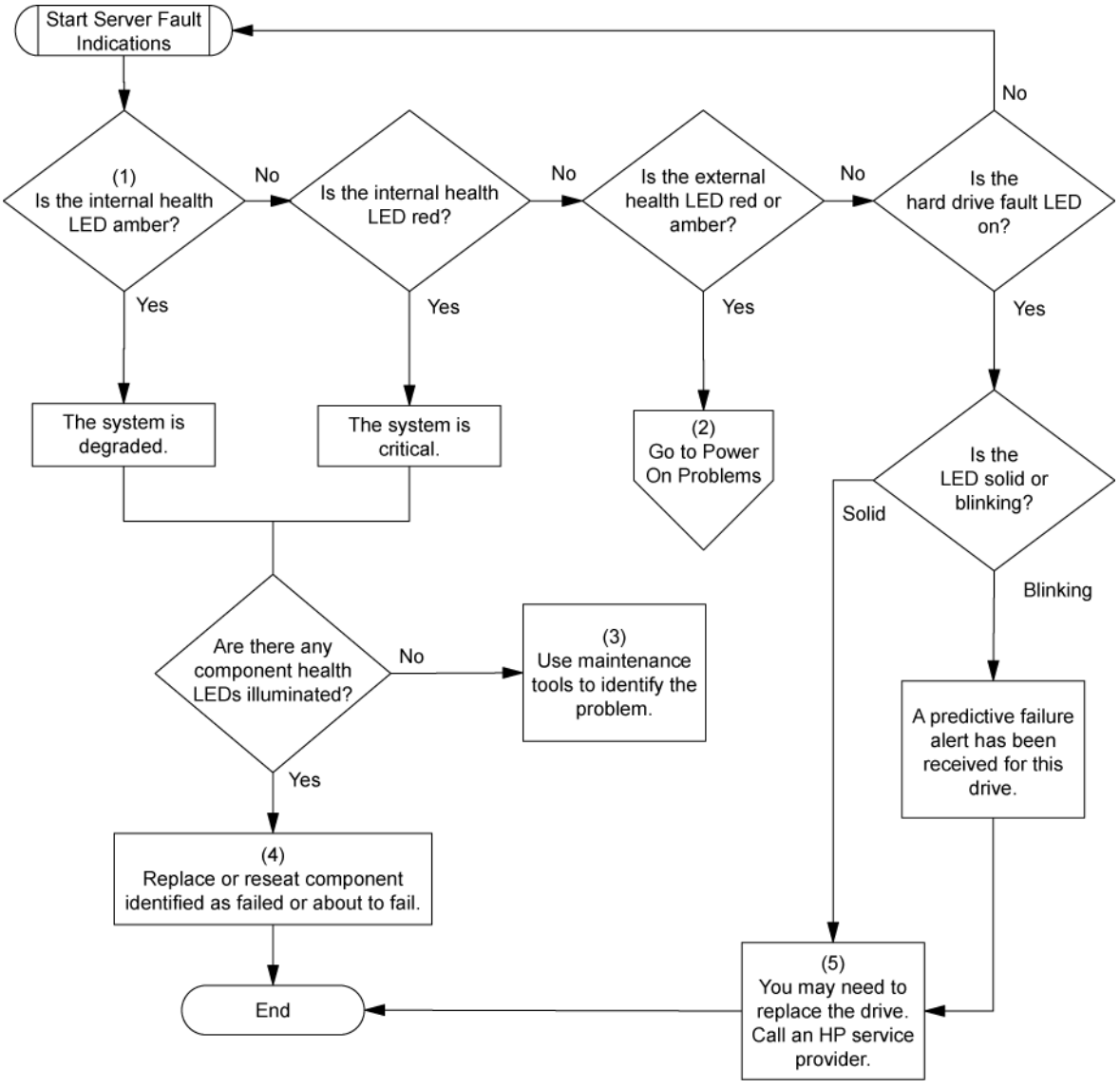

Hardware problems

The procedures in this section are comprehensive and include steps about or references to hardware features that may not be supported by the server you are troubleshooting.

Hardware problems

Power problems (on page 31)

General hardware problems (on page 33)

Internal system problems (on page 35)

External device problems (on page 42)

System short circuit ("System open circuits and short circuits" on page 41)

Power problems

Power source problems (on page 31)

Power supply problems (on page 31)

UPS problems (on page 32)

Power source problems

Action:

1. Press the Power On/Standby button to be sure it is on. If the server has a Power On/Standby button that returns to its original position after being pressed, be sure you press the switch firmly.
2. Plug another device into the grounded power outlet to be sure the outlet works. Also, be sure the power source meets applicable standards.
3. Replace the power cord with a known functional power cord to be sure it is not faulty.
4. Replace the power strip with a known functional power strip to be sure it is not faulty.
5. Have a qualified electrician check the line voltage to be sure it meets the required specifications.
6. Be sure the proper circuit breaker is in the On position.

Power supply problems

Action:

1. Be sure no loose connections (on page 17) exist.
2. If the power supplies have LEDs, be sure they indicate that each power supply is working properly. Refer to the server documentation. If LEDs indicate a problem with a power supply, replace the power supply.
3. Be sure the system has enough power, particularly if you recently added hardware, such as hard drives. Additional power supplies may be required. Use the server documentation for product-specific information.

UPS problems

UPS is not working properly

Action:

1. Be sure the UPS batteries are charged to the proper level for operation. See the UPS documentation for details.
2. Be sure the UPS power switch is in the On position. See the UPS documentation for the location of the switch.
3. Be sure the UPS software is updated to the latest version. Use the Power Management software located on the Power Management CD.
4. Be sure the power cord is the correct type for the UPS and the country in which the server is located. See the UPS reference guide for specifications.
5. Be sure the line cord is connected.
6. Be sure each circuit breaker is in the On position, or replace the fuse if needed. If this occurs repeatedly, contact an authorized service provider.
7. Check the UPS LEDs to be sure a battery or site wiring problem has not occurred. See the UPS documentation.
8. If the UPS sleep mode is initiated, disable sleep mode for proper operation. The UPS sleep mode can be turned off through the configuration mode on the front panel.
9. Change the battery to be sure damage was not caused by excessive heat, particularly if a recent air conditioning outage has occurred.

> **NOTE:** The optimal operating temperature for UPS batteries is 25°C (77°F). For approximately every 8°C to 10°C (16°F to 18°F) average increase in ambient temperature above the optimal temperature, battery life is reduced by 50 percent.

Low battery warning is displayed

Action:

1. Plug the UPS into an AC grounded outlet for at least 24 hours to charge the batteries, and then test the batteries. Replace the batteries if necessary.
2. Be sure the alarm is set appropriately by changing the amount of time given before a low battery warning. Refer to the UPS documentation for instructions.

One or more LEDs on the UPS is red

Action: Refer to the UPS documentation for instructions regarding the specific LED to determine the cause of the error.

Unknown problem

Action:

1. Disconnect power to the server.
2. Following the guidelines and cautionary information in the server documentation, strip the server to its most basic configuration by removing every card or device that is not necessary to start the server. Keep the monitor connected to view the server startup process.
3. Reconnect power, and then power the system on.

- If the video does not work, refer to "Video problems (on page 42)."

△ **CAUTION:** Only authorized technicians trained by HP should attempt to remove the system board. If you believe the system board requires replacement, contact HP Technical Support ("Contacting HP" on page 48) before proceeding.

- If the system fails in this minimum configuration, one of the primary components has failed. If you have already verified that the processor, PPM, power supply, and memory are working before getting to this point, replace the system board. If not, be sure each of those components is working.
- If the system boots and video is working, add each component back to the server one at a time, restarting the server after each component is added to determine if that component is the cause of the problem. When adding each component back to the server, be sure to disconnect power to the server and follow the guidelines and cautionary information in the server documentation.

General hardware problems

Problems with new hardware (on page 33)

Unknown problem (on page 32)

Third-party device problems (on page 34)

Testing the device (on page 34)

Problems with new hardware

Action:

1. Refer to the server documentation to be sure the hardware being installed is a supported option on the server. Remove unsupported hardware.
2. Refer to the release notes included with the hardware to be sure the problem is not caused by a last minute change to the hardware release. If no documentation is available, refer to the HP support website (http://www.hp.com/support).
3. Be sure the new hardware is installed properly. Refer to the device, server, and operating system documentation to be sure all requirements are met.

   Common problems include:

   - Incomplete population of a memory bank
   - Installation of a processor without a corresponding PPM
   - Installation of a SCSI device without termination or without proper ID settings
   - Setting of an IDE device to Primary/Secondary when the other device is set to CS
   - Connection of the data cable, but not the power cable, of a new device
4. Be sure no memory, I/O, or interrupt conflicts exist.
5. Be sure no loose connections (on page 17) exist.
6. Be sure all cables are connected to the correct locations and are the correct lengths. For more information, refer to the server documentation.
7. Be sure other components were not unseated accidentally during the installation of the new hardware component.

8. Be sure all necessary software updates, such as device drivers, ROM updates, and patches, are installed and current. For example, if you are using a Smart Array controller, you need the latest Smart Array Controller device driver.
9. Be sure all device drivers are the correct ones for the hardware. Uninstall any incorrect drivers before installing the correct drivers.
10. Press the **F10** key to run the BIOS Setup Utility after boards or other options are installed or replaced to be sure all system components recognize the changes. If you do not run the utility, you may receive a POST error message indicating a configuration error. After you check the settings in the BIOS setup menu, press the **F10** key to save and exit the utility, and then restart the server.
11. Be sure all switch settings are set correctly. For additional information about required switch settings, refer to the labels located on the inside of the server access panel or the server documentation.
12. Be sure all boards are properly installed in the server.
13. Run HP Insight Diagnostics (on page 16) to see if it recognizes and tests the device.
14. Uninstall the new hardware.

Third-party device problems

Action:

1. Refer to the server and operating system documentation to be sure the server and operating system support the device.
2. Be sure the latest device drivers are installed.
3. Refer to the device documentation to be sure the device is properly installed. For example, a third-party PCI or PCI-X board may be required to be installed on the primary PCI or PCI-X bus, respectively.

Testing the device

Action:

1. Uninstall the device.

   If the server works with the device removed and uninstalled, either a problem exists with the device, the server does not support the device, or a conflict exists with another device.
2. If the device is the only device on a bus, be sure the bus works by installing a different device on the bus.
3. Restarting the server each time to determine if the device is working, move the device:
   a. To a different slot on the same bus (not applicable for PCI Express)
   b. To a PCI, PCI-X, or PCI Express slot on a different bus
   c. To the same slot in another working server of the same or similar design

   If the board works in any of these slots, either the original slot is bad or the board was not properly seated. Reinsert the board into the original slot to verify.
4. If you are testing a board (or a device that connects to a board):
   a. Test the board with all other boards removed.
   b. Test the server with only that board removed.

CAUTION: Clearing NVRAM deletes the configuration information. Refer to the server documentation for complete instructions before performing this operation or data loss could occur.

5. Clearing NVRAM can resolve various problems. Clear the NVRAM, but do not use the backup .SCI file if prompted. Have available any .CFG, .OVL, or .PCF files that are required.

Internal system problems

CD-ROM and DVD drive problems

System does not boot from the drive

Action:

1. Be sure the drive boot order is set so that the server boots from the CD-ROM drive first.
2. If the CD-ROM drive jumpers are set to CS (the factory default), be sure the CD-ROM drive is installed as device 0 on the cable so that it is in position for the server to boot from the drive.
3. Be sure no loose connections (on page 17) exist.
4. Be sure the media from which you are attempting to boot is not damaged and is a bootable CD.
5. If attempting to boot from a USB CD-ROM drive, refer to the operating system and server documentation to be sure both support booting from a USB CD-ROM drive.

Data read from the drive is inconsistent, or drive cannot read data

Action:

1. Clean the drive and media.
2. If a paper or plastic label has been applied to the surface of the CD or DVD in use, remove the label and any adhesive residue.
3. Be sure the inserted CD or DVD format is valid for the drive. For example, be sure you are not inserting a DVD into a drive that only supports CDs.

Drive is not detected

Action:

1. Be sure no loose connections (on page 17) exist.
2. Refer to the drive documentation to be sure cables are connected as required.
3. Be sure the cables are working properly. Replace with known functional cables to test whether the original cables were faulty.
4. Be sure the correct, current driver is installed.

DAT drive problems

Sense error codes are displayed

Action: Refer to the *Troubleshooting DAT Drives* white paper for information on DAT drive sense error codes. Search for it on the HP website (http://www.hp.com).

DAT drive error or failure occurs

Action:

1. Be sure drivers, software, and firmware are upgraded to the latest revisions.
2. Clean the drive at least four times to be sure that the heads are clean and to eliminate dirty heads as the possible cause of the failure.

   DAT drives require cleaning every 8 to 25 hours of use or they may fail intermittently when using marginal or bad media. Be sure you are following the proper cleaning procedures described in the device and server documentation.

   NOTE: New DAT tapes may contain debris that will contaminate the DAT drive read/write head. If using new tapes for backup, clean the DAT drive frequently.

DAT drive is providing poor performance

Action: Be sure the drive is not being used to backup more data than is recommended for the drive. DAT drives are designed with optimum and maximum data backup sizes. Refer to the drive documentation to determine the appropriate data backup size for the drive.

Latest firmware indicates a defective tape, or head clogs occur regularly

Action: Replace the tape.

Other errors are occurring

Action: Replace the drive.

DLT drive problems

Server cannot write to tape

Action:

- If the drive cleaning light is on, clean the drive.

  NOTE: DLT cleaning cartridges are good for only 20 uses. If the cleaning cartridge is near that limit and the drive cleaning light is still on after running the cleaning cartridge, use a new cleaning tape to clean the drive.

- If the tape is write protected, remove the write protection. If the tape still does not work, insert another tape into the drive to see if the original tape is faulty.
- Refer to the tape drive documentation to be sure the type of tape being used is supported by the drive.
- Check each tape cartridge that has been used in the drive to verify its condition and inspect its tape leader to verify it is not damaged and is in the correct position. After you locate any bad cartridges, dispose of them. A working tape drive may drop its leader when using bad cartridges, indicating that they need replacing. If bad cartridges are found, you will need to inspect the DLT drives leader assembly.
  - To examine the cartridge take-up leader, tilt the cartridge receiver door on the front of the drive and look inside to see that the drive leader is connected to the buckling link-hook.

- To examine the drive take-up leader, tilt the cartridge receiver door on the front of the drive and look inside to see that the drive leader is connected to the buckling link-hook, which should be engaged in the leader slot.

DLT drive failure occurs

Action:

- Be sure the power and signal cables are properly connected.
- Be sure the power and signal cable connectors are not damaged.
- If the drive is connected to a nonembedded controller, be sure the controller is properly seated.

DLT drive does not read tape

Action:

- Be sure the drive is seated.
- Be sure the drive is installed properly.
- Check each tape cartridge that has been used in the drive to see if a leader was dropped. After you locate any bad cartridges, dispose of them. A working tape drive will drop the leader of a bad cartridge, indicating that the cartridge needs replacing.
- Refer to the tape drive documentation to be sure the type of tape being used is supported by the drive.

Server cannot find the DLT drive

Action:

- Be sure a device conflict does not exist. Check for duplicate SCSI IDs in use and refer to the documentation of the DLT drive and the array controller to be sure they are compatible.
- Be sure the maximum number of drives per controller has not been exceeded. Refer to the controller documentation to determine the capacity of the controller.

  NOTE: It is recommended that no more than two DLT drives per bus exist.

- If using an external DLT drive that requires a SCSI terminator to be secured to the unused SCSI IN connector on the back of the drive, be sure the SCSI terminator is connected.

  DLT drives can be daisy chained, but do not connect more than three units per SCSI controller. The last DLT drive in the chain requires the SCSI terminator.
- Check cables for damaged or bent connectors.

An error occurs during backup, but the backup is completed

Action: Contact the software vendor for more information about the message. If the error does not disrupt the backup, you may be able to ignore the error.

Fan problems

General fan problems are occurring

Action:

1. Be sure the fans are properly seated and working.
   a. Follow the procedures and warnings in the server documentation for removing the access panels and accessing and replacing fans.
   b. Unseat, and then reseat, each fan according to the proper procedures.
   c. Replace the access panels, and then attempt to restart the server.
2. Be sure the fan configuration meets the functional requirements of the server. Refer to the server documentation.
3. Be sure no ventilation problems exist. If you have been operating the server for an extended period of time with the access panel removed, airflow may have been impeded, causing thermal damage to components. Refer to the server documentation for further requirements.
4. Be sure no POST error messages are displayed while booting the server that indicate temperature violation or fan failure information. Refer to the server documentation for the temperature requirements for the server.
5. Replace any required non-functioning fans and restart the server. Refer to the server documentation for specifications on fan requirements.
6. Be sure all fan slots have fans or blanks installed. Refer to the server documentation for requirements.
7. Verify the fan airflow path is not blocked by cables or other material.

Hard drive problems

System completes POST but hard drive fails

Action:

1. Be sure no loose connections (on page 17) exist.
2. Be sure no device conflict exists.
3. Be sure the hard drive is properly cabled and terminated if necessary.
4. Be sure the SCSI cable is working by replacing it with a known functional cable.
5. Run Insight Diagnostics ("HP Insight Diagnostics" on page 16) and replace failed components as indicated.

Hard drive is not recognized by the server

Action:

1. Check the LEDs on the hard drive to be sure they indicate normal function. Refer to the server documentation or the HP website for information on hard drive LEDs.
2. Be sure no loose connections (on page 17) exist.
3. Remove the hard drive and be sure the configuration jumpers are set properly.
4. If using an array controller, be sure the hard drive is configured in an array. Run the array configuration utility.
5. Be sure the drive is properly configured. Refer to the drive documentation to determine the proper configuration.

6. If it is a non-hot-plug drive, be sure a conflict does not exist with another hard drive. Check for SCSI ID conflicts.
7. Be sure the correct drive controller drivers are installed.

Server response time is slower than usual

Action: Be sure the hard drive is not full, and increase the amount of free space on the hard drive, if needed. It is recommended that hard drives should have a minimum of 15 percent free space.

No hard drives are recognized

Action: Be sure no power problems (on page 31) exist.

A new hard drive is not recognized

Action:

1. Be sure the drive is supported. To determine drive support, see the server documentation or the HP website (http://www.docs.hp.com).
2. Be sure the drive bay is not defective by installing the hard drive in another bay.
3. Run HP Insight Diagnostics (on page 16). Then, replace failed components as indicated.
4. When the drive is a replacement drive on an array controller, be sure that the drive is the same type and of the same or larger capacity than the original drive.

Memory problems

General memory problems are occurring

Action:

- Isolate and minimize the memory configuration. Use care when handling DIMMs.
  - Be sure the memory meets the server requirements and is installed as required by the server. Some servers may require that memory banks be populated fully or that all memory within a memory bank must be the same size, type, and speed. To determine if the memory is installed properly, see the server documentation.
  - Check any server LEDs that correspond to memory slots.
  - If you are unsure which DIMM has failed, test each bank of DIMMs by removing all other DIMMs. Then, isolate the failed DIMM by switching each DIMM in a bank with a known working DIMM.
  - Remove any third-party memory.
- To test the memory, run HP Insight Diagnostics (on page 16).

Server is out of memory

Action:

1. Be sure the memory is configured properly. Refer to the application documentation to determine the memory configuration requirements.
2. Be sure no operating system errors are indicated.
3. Be sure a memory count error ("Memory count error exists" on page 40) did not occur. Refer to the message displaying memory count during POST.

Memory count error exists

Possible Cause: The memory modules are not installed correctly.

Action:

1. Be sure the memory modules are supported by the server. See the server documentation.
2. Be sure the memory modules have been installed correctly in a supported configuration. See the server documentation.
3. Be sure the memory modules are seated properly.
4. Be sure no operating system errors are indicated.
5. Restart the server and check to see if the error message is still displayed.
6. Run HP Insight Diagnostics (on page 16). Then, replace failed components as indicated.

Server fails to recognize existing memory

Action:

1. Reseat the memory. Use care when handling DIMMs.
2. Be sure the memory is configured properly. See the server documentation.
3. Be sure a memory count error did not occur ("Memory count error exists" on page 40). See the message displaying memory count during POST.

Server fails to recognize new memory

Action:

1. Be sure the memory is the correct type for the server and is installed according to the server requirements. Refer to the server documentation or HP website (http://www.hp.com).
2. Be sure you have not exceeded the memory limits of the server or operating system. Refer to the server documentation.
3. Be sure the memory is properly seated.
4. Be sure no conflicts are occurring with existing memory. Run the server setup utility.
5. Test the memory by installing the memory into a known working server. Be sure the memory meets the requirements of the new server on which you are testing the memory.
6. Replace the memory. Refer to the server documentation.

Processor problems

Action:

1. If applicable, check the processor LEDs to identify if a PPM failure occurred. For information on LEDs, refer to the server documentation.
2. Be sure each processor is supported by the server and is installed properly. Refer to the server documentation for processor requirements.
3. Be sure the server ROM is up to date.
4. Be sure you are not mixing processor stepping, core speeds, or cache sizes if this is not supported on the server. Refer to the server documentation for more information.

CAUTION: Removal of some processors and heatsinks require special considerations for replacement, while other processors and heatsinks are integrated and cannot be reused once separated. For specific instructions for the server you are troubleshooting, refer to processor information in the Hardware options installation (on page 12) section on the Documentation CD.

5. If the server has only one processor installed, replace it with a known functional processor. If the problem is resolved after you restart the server, the original processor failed.
6. If the server has multiple processors installed, test each processor:
   a. Remove all but one processor from the server. Replace each with a processor terminator board or blank, if applicable to the server.
   b. If the server includes PPMs that are not integrated on the system board, remove all PPMs from the server except for the PPM associated with the remaining processor.
   c. Replace the remaining processor with a known functional processor. If the problem is resolved after you restart the server, a fault exists with one or more of the original processors. Install each processor and its associated PPM (if applicable) one by one, restarting each time, to find the faulty processor or processors. Be sure the processor configurations at each step are compatible with the server requirements.

PPM problems

Action: If the PPMs are not integrated on the system board:

CAUTION: Do not operate the server for long periods with the access panel open or removed. Operating the server in this manner results in improper airflow and improper cooling that can lead to thermal damage.

1. If applicable, check the PPM LEDs to identify if a PPM failure occurred. For information on LEDs, refer to the server documentation.
2. Reseat each PPM, and then restart the server.
3. If reseating the PPMs is not effective, remove all but one PPM, restart the server to see if the PPM is working, and then install each PPM individually, cycling power each time. Follow the warnings and cautionary information in the server documentation.

System open circuits and short circuits

Action:

CAUTION: Do not operate the server for long periods with the access panel open or removed. Operating the server in this manner results in improper airflow and improper cooling that can lead to thermal damage.

1. Check the server LEDs to see if any statuses indicate the source of the problem. For LED information, refer to the server documentation.
2. Remove all power sources to the server.
3. Be sure no loose connections (on page 17) exist in the area.
4. Be sure each component in the area is working. Refer to the section for each component in this guide.

If you cannot determine the problem by checking the specific area, perform each of the following actions. Restart the server after each action to see if the problem has been corrected.

- Reseat all I/O expansion boards.
- Be sure no loose connections (on page 17) exist in the rest of the server, particularly with the cables that connect to the system board.
- Be sure no foreign material exists, such as screws, bits, or slot bracket blanks, that may be short circuiting components.

External device problems

Video problems (on page 42)

Audio problems (on page 43)

Printer problems (on page 43)

Mouse and keyboard problems (on page 43)

Diagnostic adapter problems (on page 44)

Modem problems (on page 44)

Network controller problems (on page 46)

Video problems

Screen is blank for more than 60 seconds after you power up the server

Action:

1. Power up the monitor and be sure the monitor light is on, indicating that the monitor is receiving power.
2. Be sure the monitor power cord is plugged into a working grounded (earthed) AC outlet.
3. Be sure the monitor is cabled to the intended server or KVM connection.
4. Be sure no loose connections (on page 17) exist.
   - For rack-mounted servers, check the cables to the KVM switch and be sure the switch is correctly set for the server. You may need to connect the monitor directly to the server to be sure the KVM switch has not failed.
   - For tower-model servers, check the cable connection from the monitor to the server, and then from the server to the power outlet.
5. Press any key, or type the password, and wait a few moments for the screen to activate to be sure the energy saver feature is not in effect.
6. Be sure the video driver is current. Refer to the third-party video adapter documentation for driver requirements.
7. Be sure a video expansion board has not been added to replace onboard video, making it seem like the video is not working. Disconnect the video cable from the onboard video, and then reconnect it to the video jack on the expansion board.

   NOTE: All servers automatically bypass onboard video when a video expansion board is present.

8. Press any key, or type the password, and wait a few moments for the screen to activate to be sure the power-on password feature is not in effect. You can also tell if the power-on password is enabled if a key symbol is displayed on the screen when POST completes.

   If you do not have access to the password, you must disable the power-on password by using the Password Disable switch on the system board. Refer to the server documentation.
9. If the video expansion board is installed in a PCI Hot Plug slot, be sure the slot has power by checking the power LED on the slot, if applicable. Refer to the server documentation.
10. Be sure the server and the operating system support the video expansion board.

Monitor does not function properly with energy saver features

Action: Be sure the monitor supports energy saver features, and if it does not, disable the features.

Video colors are wrong

Action:

- Be sure the 15-pin VGA cable is securely connected to the correct VGA port on the server and to the monitor.
- Be sure the monitor and any KVM switch are compatible with the VGA output of the server.

Slow-moving horizontal lines are displayed

Action: Be sure magnetic field interference is not occurring. Move the monitor away from other monitors or power transformers.

Audio problems

Action: Be sure the server speaker is connected. Refer to the server documentation.

Printer problems

Printer does not print

Action:

1. Be sure the printer is powered up and online.
2. Be sure no loose connections (on page 17) exist.
3. Be sure the correct printer drivers are installed.

Printer output is garbled

Action: Be sure the correct printer drivers are installed.

Mouse and keyboard problems

Action:

1. Be sure no loose connections (on page 17) exist. If a KVM switching device is in use, be sure the server is properly connected to the switch.
   - For rack-mounted servers, check the cables to the switch box and be sure the switch is correctly set for the server.
   - For tower model servers, check the cable connection from the input device to the server.

2. If a KVM switching device is in use, be sure all cables and connectors are the proper length and are supported by the switch. Refer to the switch documentation.
3. Be sure the current drivers for the operating system are installed.
4. Be sure the device driver is not corrupted by replacing the driver.
5. Restart the system and check whether the input device functions correctly after the server restarts.
6. Replace the device with a known working equivalent device (another similar mouse or keyboard).
   - If the problem still occurs with the new mouse or keyboard, the connector port on the system I/O board is defective. Replace the board.
   - If the problem no longer occurs, the original input device is defective. Replace the device.
7. Be sure the keyboard or mouse is connected to the correct port. Determine whether the keyboard lights flash at POST or the NumLock LED illuminates. If not, change port connections.
8. Be sure the keyboard or mouse is clean.

Diagnostic adapter problems

Action: If the diagnostic adapter does not have hot-plug functionality, be sure you are not using a PS/2 keyboard or mouse. With a PS/2 keyboard or mouse, the diagnostic adapter cannot be connected as a hot-plug device. Connect the diagnostic adapter before booting the server, or switch to USB devices (if supported) to use the diagnostic adapter hot-plug functionality.

Modem problems

No dial tone exists

Action:

1. Be sure the cables are plugged in as specified in the modem documentation.
2. Connect a working telephone directly to the wall jack, and then test the line for a dial tone.
3. If no dial tone is detected, the phone line is not working. Contact the local telephone company and arrange to correct the problem.

Modem does not connect to another modem

Action:

1. Be sure a dial tone exists.
2. Be sure the line is not in use at another extension before using it.
3. Be sure you are dialing the correct telephone number.
4. Be sure the modem on the other end is working.

No response occurs when you type AT commands

Action: Reconfigure the COM port address for the modem.

1. Be sure the communications software is set to the COM port to which the modem is connected.
2. Check IRQ settings in the software and on the modem to be sure no conflict exists.
3. Type `AT&F` at the command prompt to reset the modem to factory-default settings.
4. Be sure you are in terminal mode and not MS-DOS mode.
5. Refer to the HP website (http://www.hp.com) for a complete list of AT commands.

AT commands are not visible

Action: Set the echo command to On using the AT command `ATE`.

Data is displayed as garbled characters after the connection is established

Action:

1. Be sure both modems have the same settings, including speed, data, parity, and stop bits.
2. Be sure the software is set for the correct terminal emulation.
   a. Reconfigure the software correctly.
   b. Restart the server.
   c. Run the communications software, checking settings and making corrections where needed.
   d. Restart the server, and then reestablish the modem connection.

Modem does not answer an incoming call

Action:

1. Enable the auto-answer option in the communications software.
2. Be sure an answering machine is not answering the line before the modem is able to answer.
   a. Turn off the answering machine.

      or

      Reconfigure the auto-answer option to respond in fewer rings than the answering machine.
   b. Restart the server, and then reattempt the connection.

Modem disconnects while online

Action:

1. Be sure no loose connections (on page 17) exist.
2. Be sure no line interference exists. Retry the connection by dialing the number several times. If conditions remain poor, contact the telephone company to have the line tested.
3. Be sure an incoming call is not breaking the connection due to call waiting. Disable call waiting, and then reestablish the connection.

AT command initialization string is not working

Action: Use the most basic string possible to perform the task. The default initialization string is `AT&F&C1&D2&K3`.

Connection errors are occurring

Action:

1. Check the maximum baud rate for the modem to which you are connecting, and then change the baud rate to match.
2. If the line you are accessing requires error control to be turned off, do so using the AT command `AT&Q6%C0`.
3. Be sure no line interference exists. Retry the connection by dialing the number several times. If conditions remain poor, contact the telephone company to have the line tested.

4. Be sure the modem is current and compliant with CCITT and Bell standards. Replace with a supported modem if needed.

You are unable to connect to an online subscription service

Action:

1. If the line you are accessing requires error control to be turned off, do so using the AT command `AT&Q6%C0`.
2. If the ISP you are accessing requires access at a decreased baud rate, reconfigure the communications software to correct the connection baud rate to match the ISP.
3. If this does not work, force a slower baud rate (14400 baud) with the AT command `AT&Q6N0S37=11`.

You are unable to connect at 56 Kbps

Action:

1. Find out the maximum baud rate at which the ISP connects, and change the settings to reflect this. Reattempt to connect at a lower baud rate.
2. Be sure no line interference exists. Retry the connection by dialing the number several times. If conditions remain poor, contact the telephone company to have the line tested.

Network controller problems

Network controller is installed but not working

Action:

1. Check the network controller LEDs to see if any statuses indicate the source of the problem. For LED information, refer to the network controller documentation.
2. Be sure no loose connections (on page 17) exist.
3. Be sure the network cable is working by replacing it with a known functional cable.
4. Be sure a software problem has not caused failure. Refer to the operating system documentation for guidelines on adding or replacing PCI Hot Plug devices, if applicable.
5. Be sure the server and operating system support the controller. Refer to the server and operating system documentation.
6. Be sure the controller is enabled in the BIOS Setup Utility.
7. Check the PCI Hot Plug power LED to be sure the PCI slot is receiving power, if applicable.
8. Be sure the server ROM is up to date.
9. Be sure the controller drivers are up to date.
10. Be sure a valid IP address is assigned to the controller and that the configuration settings are correct.
11. Run Insight Diagnostics ("HP Insight Diagnostics" on page 16) and replace failed components as indicated.

Network controller has stopped working

Action:

1. Check the network controller LEDs to see if any statuses indicate the source of the problem. For LED information, refer to the network controller documentation.

2. Be sure the correct network driver is installed for the controller and that the driver file is not corrupted. Reinstall the driver.
3. Be sure no loose connections (on page 17) exist.
4. Be sure the network cable is working by replacing it with a known functional cable.
5. Check the PCI Hot Plug power LED to be sure the PCI slot is receiving power, if applicable.
6. Be sure the network controller is not damaged.
7. Run Insight Diagnostics ("HP Insight Diagnostics" on page 16) and replace failed components as indicated.

Network controller stopped working when an expansion board was added

Action:

1. Be sure no loose connections (on page 17) exist.
2. Be sure the server and operating system support the controller. Refer to the server and operating system documentation.
3. Be sure the new expansion board has not changed the server configuration, requiring reinstallation of the network driver.
   a. Uninstall the network controller driver for the malfunctioning controller in the operating system.
   b. Restart the server, run BIOS Setup Utility, and be sure the server recognizes the controller and resources are available for the controller.
   c. Restart the server, and then reinstall the network driver.
4. Refer to the operating system documentation to be sure the correct drivers are installed.
5. Refer to the operating system documentation to be sure that the driver parameters match the configuration of the network controller.

Contacting HP

Contacting HP technical support or an authorized reseller

Before contacting HP, always attempt to resolve problems by completing the procedures in this guide.

IMPORTANT: Collect the appropriate server information ("Server information you need" on page 48) and operating system information ("Operating system information you need" on page 49) before contacting HP for support.

For the name of the nearest HP authorized reseller:

- See the Contact HP worldwide (in English) webpage (http://welcome.hp.com/country/us/en/wwcontact.html).

For HP technical support:

- In the United States, for contact options see the Contact HP United States webpage (http://welcome.hp.com/country/us/en/contact_us.html). To contact HP by phone:
  - Call 1-800-HP-INVENT (1-800-474-6836). This service is available 24 hours a day, 7 days a week. For continuous quality improvement, calls may be recorded or monitored.
  - If you have purchased a Care Pack (service upgrade), call 1-800-633-3600. For more information about Care Packs, refer to the HP website (http://www.hp.com/hps).
- In other locations, see the Contact HP worldwide (in English) webpage (http://welcome.hp.com/country/us/en/wwcontact.html).

Server information you need

Before contacting HP, collect the following:

- All information from any troubleshooting efforts to this point.
- A printed copy of the system and operating environment information and a copy of any historical data that might be relevant. If possible, obtain an electronic copy of this information to send by e-mail to a support specialist. To collect this information, run the Survey Utility (if available) and refer to the server documentation.
- A list of the system components:
  - Product, model, and serial number
  - Hardware configuration
  - Add-on boards
  - Monitor
  - Connected peripherals such as tape drives
- A list of all third-party hardware and software:
  - Complete product name and model
  - Complete company name
  - Product version
  - Driver version

- Any notes describing the details of the problem, including recent changes to the system, the events that triggered or are associated with the problem, and the steps needed to reproduce the problem.
- Notes on anything nonstandard about the server setup.
- Operating system information ("Operating system information you need" on page 49)

Operating system information you need

Depending on the problem, you may be asked for certain pieces of information. Be prepared to access the information listed in the following sections, based on operating system used.

Microsoft® operating systems

Collect the following information:

- Whether the operating system was factory installed
- Operating system version number
- A current copy of the following files:
  - WinMSD (Msinfo32.exe on Microsoft® Windows® 2000 systems)
  - Boot.ini
  - Memory.dmp
  - Event logs
  - Dr. Watson log (drwtsn32.log) if a user mode application, such as the Insight Agents, is having a problem
  - IRQ and I/O address information in text format
- An updated Emergency Repair Diskette
- If HP drivers are installed:
  - Version of the PSP used
  - List of drivers from the PSP
- The drive subsystem and file system information:
  - Number and size of partitions and logical drives
  - File system on each logical drive
- Current level of Microsoft® Windows® Service Packs and Hotfixes installed
- A list of each third-party hardware component installed, with the firmware revision
- A list of each third-party software component installed, with the version
- A detailed description of the problem and any associated error messages

Linux operating systems

Collect the following information:

- Operating system distribution and version

  Look for a file named /etc/*distribution*-release (for example, /etc/redhat-release)
- Kernel version in use
- Output from the following commands (performed by root):

    - lspci -v
    - uname -a
    - cat /proc/meminfo
    - cat /proc/cpuinfo
    - rpm -ga
    - dmesg
    - lsmod
    - ps -ef
    - ifconfig -a
    - chkconfig -list
    - mount
- Contents of the following files:
    - /var/log/messages
    - /etc/modules.conf or etc/conf.modules
    - /etc/lilo.conf or /etc/grub.conf
    - /etc/fstab
- If HP drivers are installed:
    - Version of the PSP used
    - List of drivers from the PSP (/var/log/hppldu.log)
- A list of each third-party hardware component installed, with the firmware revisions
- A list of each third-party software component installed, with the versions
- A detailed description of the problem and any associated error messages

Novell NetWare operating systems

Collect the following information:

- Whether the operating system was factory installed
- Operating system version number
- Printouts or electronic copies (to e-mail to a support technician) of AUTOEXEC.NCF, STARTUP.NCF, and the system directory
- A list of the modules. Use CONLOG.NLM to identify the modules and to check whether errors occur when the modules attempt to load.
- A list of any SET parameters that are different from the NetWare default settings
- A list of the drivers and NLM files used on the server, including the names, versions, dates, and sizes (can be taken directly from the CONFIG.TXT or SURVEY.TXT files)
- If HP drivers are installed:
    - Version of the PSP used
    - List of drivers from the PSP
- Printouts or electronic copies (to e-mail to a support technician) of:
    - SYS:SYSTEM\SYS$LOG.ERR

- SYS:SYSTEM\ABEND.LOG
- SYS:ETC\CPQLOG.LOG
- SYS:SYSTEM\CONFIG.TXT
- SYS:SYSTEM\SURVEY.TXT

- Current patch level
- A list of each third-party hardware component installed, with the firmware revisions
- A list of each third-party software component installed, with the versions
- A detailed description of the problem and any associated error messages

SCO operating systems

Collect the following information:

- Installed system software versions (TCP/IP, VP/Ix)
- Process status at time of failure, if possible
- Printouts or electronic copies (to e-mail to a support technician) of:
  - Output of `/etc/hwconfig` command
  - Output of `/usr/bin/swconfig` command
  - Output of `/etc/ifconfig` command
  - /etc/conf/cf.d/sdevice
  - /etc/inittab
  - /etc/conf/cf.d/stune
  - /etc/conf/cf.d/config.h
  - /etc/conf/cf.d/sdevice
  - /var/adm/messages (if PANIC messages are displayed)
- If HP drivers are installed:
  - Version of the EFS used
  - List of drivers from the EFS
- If management agents are installed, version number of the agents
- System dumps, if they can be obtained (in case of panics)
- A list of each third-party hardware component installed, with the firmware revisions
- A list of each third-party software component installed, with the versions
- A detailed description of the problem and any associated error messages

IBM OS/2 operating systems

Collect the following information:

- Operating system version number and printouts or electronic copies (to e-mail to a support technician) of:
  - IBMLAN.INI
  - PROTOCOL.INI

  - CONFIG.SYS
  - STARTUP.CMD
  - SYSLEVEL information in detail
  - TRAPDUMP information (if a TRAP error occurs)
- A directory listing of:
  - C:\
  - C:\OS2
  - C:\OS2\BOOT
  - HPFS386.INI (for Advanced or Advanced with SMP)
- If HP drivers are installed:
  - Version of the SSD used
  - List of drivers from the SSD
  - Versions of the OS/2 Management Insight Agents, CPQB32.SYS, and OS/2 Health Driver use
- The drive subsystem and file system information:
  - Number and size of partitions and logical drives
  - File system on each logical drive
- Warp Server version used and:
  - Whether Entry, Advanced, Advanced with SMP, or e-Business
  - All services running at the time the problem occurred
- A list of each third-party hardware component installed, with the firmware revisions
- A list of each third-party software component installed, with the versions
- A detailed description of the problem and any associated error messages

Sun Solaris operating systems

Collect the following information:

- Operating system version number
- Type of installation selected: Interactive, WebStart, or Customer JumpStart
- Which software group selected for installation: End User Support, Entire Distribution, Developer System Support, or Core System Support
- If HP drivers are installed with a DU:
  - DU number
  - List of drivers in the DU diskette
- The drive subsystem and file system information:
  - Number and size of partitions and logical drives
  - File system on each logical drive
- A list of all third-party hardware and software installed, with versions
- A detailed description of the problem and any associated error messages
- Printouts or electronic copies (to e-mail to a support technician) of:

- /usr/sbin/crash (accesses the crash dump image at /var/crash/$hostname)
- /var/adm/messages
- /etc/vfstab
- /usr/sbin/prtconf

Software tools and solutions

Software problems ("Introduction to software problems" on page 53)

Firmware maintenance (on page 56)

Introduction to software problems

The best sources of information for software problems are the operating system and application software documentation, which may also point to fault detection tools that report errors and preserve the system configuration.

Another useful resource is HP Insight Diagnostics. Use this utility to gather critical system hardware and software information and to help with problem diagnosis.

IMPORTANT: This guide provides information for multiple servers. Some information may not apply to the server you are troubleshooting. Refer to the server documentation for information on procedures, hardware options, software tools, and operating systems supported by the server.

Refer to "Server software and configuration utilities ("Software and configuration utilities" on page 16)" for more information.

Operating system updates

Use care when applying operating system updates (Service Packs, hotfixes, and patches). Before updating the operating system, read the release notes for each update. If you do not require specific fixes from the update, it is recommended that you do **not** apply the updates. Some updates overwrite files specific to HP.

If you decide to apply an operating system update:

1. Perform a full system backup.
2. Apply the operating system update, using the instructions provided.
3. Install the current drivers.

If you apply the update and have problems, refer to the Software and Drivers Download website (http://h18007.www1.hp.com/support/files/server) to find files to correct the problems.

Operating system problems

Operating system locks up

Action: Scan for viruses with an updated virus scan utility.

Errors are displayed in the error log

Action: Follow the information provided in the error log, and then refer to the operating system documentation.

Problems occur after the installation of a service pack

Action: Follow the instructions for updating the operating system ("Operating system updates" on page 53).

You are unable to bind NICs during the Protocols Interview with a Factory-Installed Novell NetWare 5 operating system

Action: Be sure the packet receive buffers are set high enough. Toggle over to the console during the Protocols Interview and adjust these values to a higher setting that allows you to bind the NICs. A minimum setting of 50 buffers per port is recommended, and the maximum setting should be 125 more than the minimum. To make the setting changes:

1. Type the following commands at the System Console screen (where *XXX* is the new numeric value):

   ```
   Set Minimum Packet Receive Buffers=XXX
   ```

   ```
   Set Maximum Packet Receive Buffers=XXX
   ```

2. Add the commands to the STARTUP.NCF file.

NOTE: When gigabit NICs are installed, the minimum buffers should be set to at least 500, and the maximum to at least 2000.

During installation of Sun Solaris, the system locks up or a panic error occurs

Action: Disable ACPI support in Sun Solaris. Refer to the Sun website (http://www.sun.com) for documentation on how to disable ACPI.

Restoring to a backed-up version

If you recently upgraded the operating system or software and cannot resolve the problem, you can try restoring a previously saved version of the system. Before restoring the backup, make a backup of the current system. If restoring the previous system does not correct the problem, you can restore the current set to be sure you do not lose additional functionality.

Refer to the documentation provided with the backup software.

When to reconfigure or reload software

If all other options have not resolved the problem, consider reconfiguring the system. Before you take this step:

1. Weigh the projected downtime of a software reload against the time spent troubleshooting intermittent problems. It may be advantageous to start over by removing and reinstalling the problem software.
2. Be sure the server has adequate resources (processor speed, hard drive space, and memory) for the software.
3. Be sure the server ROM is current and the configuration is correct.
4. Be sure you have printed records of all troubleshooting information you have collected to this point.

5. Be sure you have two good backups before you start. Test the backups using a backup utility.
6. Check the operating system and application software resources to be sure you have the latest information.
7. If the last-known functioning configuration does not work, try to recover the system with operating system recovery software:
   - Microsoft® operating systems:

     Windows Server® 2003—Automated System Recovery Diskette. If the operating system was factory-installed, click **Start>All Programs>Accessories>System Tools** to access the backup utility. Refer to the operating system documentation for more information.

     Windows® 2000—Emergency Repair Diskette. If the operating system was factory-installed, click **Start>Programs>System Tools** to access the Emergency Repair Disk Utility. Refer to the operating system documentation for more information.
   - Novell NetWare—Repair traditional volumes with VREPAIR. On NetWare 5.X systems, repair NSS volumes with the NSS menu command, and on NetWare 6 systems, repair NSS volumes using the `NSS/PoolVerify` command followed by the `NSS/PoolRebuild` command, if necessary. Refer to the NetWare documentation for more information.
   - Caldera UnixWare and SCO OpenServer from Caldera—Emergency boot diskette. Refer to the Caldera UnixWare or SCO OpenServer from Caldera documentation for more information.
   - Sun Solaris—Device Configuration Assistant boot diskette. Refer to the Solaris documentation for more information.
   - IBM OS/2—Power up the server from the startup diskettes. Refer to the OS/2 documentation for more information.
   - Linux—Refer to the operating system documentation for information.

Linux operating systems

For troubleshooting information specific to Linux operating systems, refer to the Linux for ProLiant website (http://h18000.www1.hp.com/products/servers/linux).

Application software problems

Software locks up

Action:

1. Check the application log and operating system log for entries indicating why the software failed.
2. Check for incompatibility with other software on the server.
3. Check the support website of the software vendor for known problems.
4. Review log files for changes made to the server which may have caused the problem.
5. Scan the server for viruses with an updated virus scan utility.

Errors occur after a software setting is changed

Action: Check the system logs to determine what changes were made, and then change settings to the original configuration.

Errors occur after the system software is changed

Action: Change settings to the original configuration. If more than one setting was changed, change the settings one at a time to isolate the cause of the problem.

Errors occur after an application is installed

Action:

- Check the application log and operating system log for entries indicating why the software failed.
- Check system settings to determine if they are the cause of the error. You may need to obtain the settings from the server setup utility and manually set the software switches. Refer to the application documentation, the vendor website, or both.
- Check for overwritten files. Refer to the application documentation to find out which files are added by the application.
- Reinstall the application.
- Be sure you have the most current drivers.

Firmware maintenance

HP has developed technologies to help ensure that HP servers provide maximum uptime with minimal maintenance. Many of these technologies also reduce server management efforts, enabling administrators to work on issues and resolve problems without taking servers offline.

Types of ROM

Types of ROMs include:

- System ROM (on page 56)
- Option ROMs (on page 56)

System ROM

A system reboot is required for a ROM upgrade to take effect. For disaster recovery or ROM downgrade purposes, backups of the most current ROM image are available in either redundant ROM or a ROM backup.

Option ROMs

Types of option ROMs include:

- Array controller ROMs
- Integrated Lights-Out (iLO) ROMs
- Hard drive ROMs

Flashing ROM

The process of upgrading system and option ROMs is referred to as **flashing the ROM**. A ROM flash uses software to replace the current system ROM on a target server with a new ROM image. Flash the ROM to:

- Support new features
- Correct problems in a previous ROM version

ROMPaq utility

The ROMPaq utility enables you to upgrade the system firmware (BIOS) or Lights-Out 100 firmware. To upgrade the firmware, insert a ROMPaq diskette into the diskette drive or ROMPaq USB Key into an available USB port and boot the system.

The ROMPaq utility checks the system and provides a choice (if more than one exists) of available firmware revisions.

For more information about the ROMPaq utility, see the HP website (http://www.hp.com/go/support).

Current firmware versions

Automatic firmware updates

Subscriber's Choice (http://www.hp.com/go/subscriberschoice)

Manual firmware updates

Download the latest firmware updates from the HP website (http://h18023.www1.hp.com/support/files/server/us/romflash.html).

Updating firmware

To update the firmware:

1. Check the firmware version on the device.
2. Determine the latest firmware version available.
3. If a TPM is installed and enabled on the server, disable BitLocker™ before updating the firmware. For more information, see the operating system documentation.
4. Update the firmware to the current version supported for the hardware configuration.
5. Verify the firmware update by checking the firmware version.
6. If a TPM is installed and enabled on the server, enable BitLocker™ after the firmware update is complete. For more information, see the operating system documentation.

Drivers

HP drivers and utilities can be found on the Support CD. For the latest drivers and information on supported operating systems, refer to the HP website (http://www.hp.com/support).

IMPORTANT: Always perform a backup before installing or updating device drivers.

Battery replacement

If the server no longer automatically displays the correct date and time, you may need to replace the battery that provides power to the real-time clock. Under normal use, battery life is 5 to 10 years.

⚠ **WARNING:** The computer contains an internal lithium manganese dioxide, a vanadium pentoxide, or an alkaline battery pack. A risk of fire and burns exists if the battery pack is not properly handled. To reduce the risk of personal injury:

- Do not attempt to recharge the battery.
- Do not expose the battery to temperatures higher than 60°C (140°F).
- Do not disassemble, crush, puncture, short external contacts, or dispose of in fire or water.
- Replace only with the spare designated for this product.

To remove the component:

1. Power down the server (on page 5).
2. Extend the server from the rack, if applicable.
3. Remove the access panel (on page 5).
4. Remove any hardware that will interfere with accessing the battery.

5. Remove the battery.

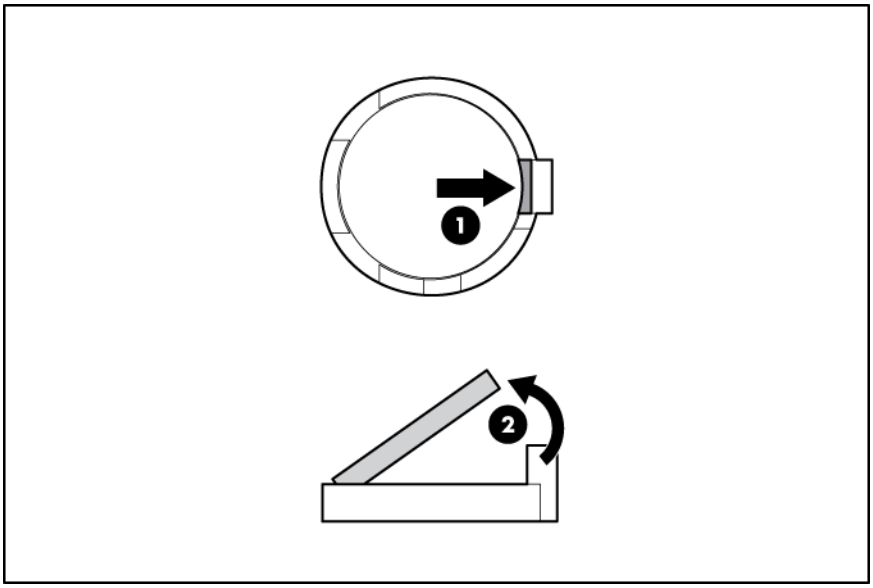

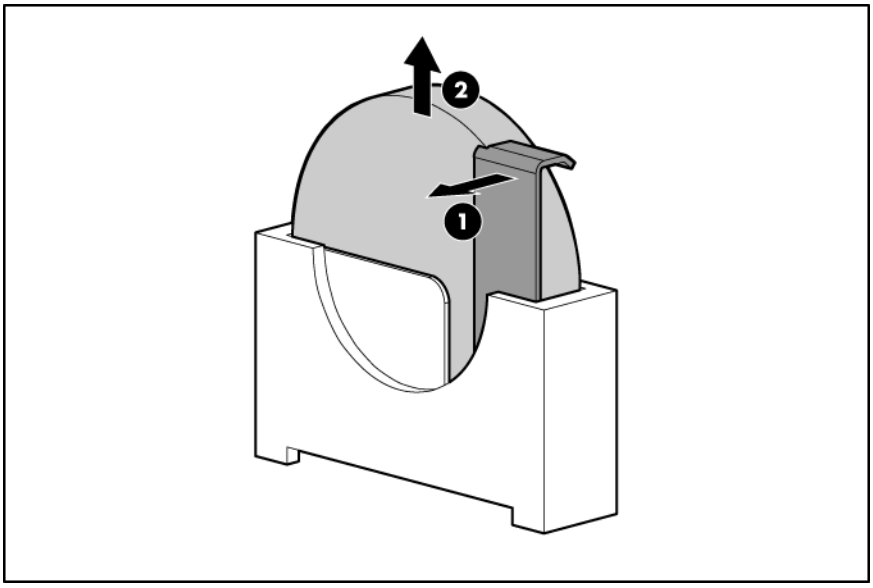

To replace the component, reverse the removal procedure.

For more information about battery replacement or proper disposal, contact an authorized reseller or an authorized service provider.

Regulatory compliance notices

Regulatory compliance identification numbers

For the purpose of regulatory compliance certifications and identification, this product has been assigned a unique regulatory model number. The regulatory model number can be found on the product nameplate label, along with all required approval markings and information. When requesting compliance information for this product, always refer to this regulatory model number. The regulatory model number is not the marketing name or model number of the product.

Federal Communications Commission notice

Part 15 of the Federal Communications Commission (FCC) Rules and Regulations has established Radio Frequency (RF) emission limits to provide an interference-free radio frequency spectrum. Many electronic devices, including computers, generate RF energy incidental to their intended function and are, therefore, covered by these rules. These rules place computers and related peripheral devices into two classes, A and B, depending upon their intended installation. Class A devices are those that may reasonably be expected to be installed in a business or commercial environment. Class B devices are those that may reasonably be expected to be installed in a residential environment (for example, personal computers). The FCC requires devices in both classes to bear a label indicating the interference potential of the device as well as additional operating instructions for the user.

FCC rating label

The FCC rating label on the device shows the classification (A or B) of the equipment. Class B devices have an FCC logo or ID on the label. Class A devices do not have an FCC logo or ID on the label. After you determine the class of the device, refer to the corresponding statement.

Class A equipment

This equipment has been tested and found to comply with the limits for a Class A digital device, pursuant to Part 15 of the FCC Rules. These limits are designed to provide reasonable protection against harmful interference when the equipment is operated in a commercial environment. This equipment generates, uses, and can radiate radio frequency energy and, if not installed and used in accordance with the instructions, may cause harmful interference to radio communications. Operation of this equipment in a residential area is likely to cause harmful interference, in which case the user will be required to correct the interference at personal expense.

Class B equipment

This equipment has been tested and found to comply with the limits for a Class B digital device, pursuant to Part 15 of the FCC Rules. These limits are designed to provide reasonable protection against harmful interference in a residential installation. This equipment generates, uses, and can radiate radio frequency

energy and, if not installed and used in accordance with the instructions, may cause harmful interference to radio communications. However, there is no guarantee that interference will not occur in a particular installation. If this equipment does cause harmful interference to radio or television reception, which can be determined by turning the equipment off and on, the user is encouraged to try to correct the interference by one or more of the following measures:

- Reorient or relocate the receiving antenna.
- Increase the separation between the equipment and receiver.
- Connect the equipment into an outlet on a circuit that is different from that to which the receiver is connected.
- Consult the dealer or an experienced radio or television technician for help.

Declaration of conformity for products marked with the FCC logo, United States only

This device complies with Part 15 of the FCC Rules. Operation is subject to the following two conditions: (1) this device may not cause harmful interference, and (2) this device must accept any interference received, including interference that may cause undesired operation.

For questions regarding this product, contact us by mail or telephone:

- Hewlett-Packard Company
  P. O. Box 692000, Mail Stop 530113
  Houston, Texas 77269-2000
- 1-800-HP-INVENT (1-800-474-6836). (For continuous quality improvement, calls may be recorded or monitored.)

For questions regarding this FCC declaration, contact us by mail or telephone:

- Hewlett-Packard Company
  P. O. Box 692000, Mail Stop 510101
  Houston, Texas 77269-2000
- 1-281-514-3333

To identify this product, refer to the part, series, or model number found on the product.

Modifications

The FCC requires the user to be notified that any changes or modifications made to this device that are not expressly approved by Hewlett-Packard Company may void the user's authority to operate the equipment.

Cables

Connections to this device must be made with shielded cables with metallic RFI/EMI connector hoods in order to maintain compliance with FCC Rules and Regulations.

Canadian notice (Avis Canadien)

Class A equipment

This Class A digital apparatus meets all requirements of the Canadian Interference-Causing Equipment Regulations.

Cet appareil numérique de la classe A respecte toutes les exigences du Règlement sur le matériel brouilleur du Canada.

Class B equipment

This Class B digital apparatus meets all requirements of the Canadian Interference-Causing Equipment Regulations.

Cet appareil numérique de la classe B respecte toutes les exigences du Règlement sur le matériel brouilleur du Canada.

European Union regulatory notice

This product complies with the following EU Directives:

- Low Voltage Directive 2006/95/EC
- EMC Directive 2004/108/EC

Compliance with these directives implies conformity to applicable harmonized European standards (European Norms) which are listed on the EU Declaration of Conformity issued by Hewlett-Packard for this product or product family.

This compliance is indicated by the following conformity marking placed on the product:



This marking is valid for non-Telecom products and EU harmonized Telecom products (e.g. Bluetooth).



This marking is valid for EU non-harmonized Telecom products.

*Notified body number (used only if applicable—refer to the product label)

Hewlett-Packard GmbH, HQ-TRE, Herrenberger Strasse 140, 71034 Boeblingen, Germany

Disposal of waste equipment by users in private households in the European Union



This symbol on the product or on its packaging indicates that this product must not be disposed of with your other household waste. Instead, it is your responsibility to dispose of your waste equipment by handing it over to a designated collection point for the recycling of waste electrical and electronic equipment. The separate collection and recycling of your waste equipment at the time of disposal will help to conserve natural resources and ensure that it is recycled in a manner that protects human health and the environment. For more information about where you can drop off your waste equipment for recycling, please contact your local city office, your household waste disposal service or the shop where you purchased the product.

Japanese notice

ご使用になっている装置にVCCIマークが付いていましたら、次の説明文をお読み下さい。

この装置は、情報処理装置等電波障害自主規制協議会（VCCI）の基準に基づくクラスB情報技術装置です。この装置は、家庭環境で使用することを目的としていますが、この装置がラジオやテレビジョン受信機に近接して使用されると、受信障害を引き起こすことがあります。
取扱説明書に従って正しい取り扱いをして下さい。

VCCIマークが付いていない場合には、次の点にご注意下さい。

この装置は、情報処理装置等電波障害自主規制協議会（VCCI）の基準に基づくクラスA情報技術装置です　この装置を家庭環境で使用すると電波妨害を引き起こすことがあります。この場合には使用者が適切な対策を講ずるよう要求されることがあります。

BSMI notice

警告使用者:

這是甲類的資訊產品，在居住的環境中使用時，可能會造成射頻干擾，在這種情況下，使用者會被要求採取某些適當的對策。

Korean notice

Class A equipment

A급 기기 (업무용 방송통신기기)	이 기기는 업무용(A급)으로 전자파적합등록을 한 기기이오니 판매자 또는 사용자는 이 점을 주의하시기 바라며, 가정 외의 지역에서 사용하는 것을 목적으로 합니다.

Class B equipment

B급 기기 (가정용 방송통신기기)	이 기기는 가정용(B급)으로 전자파적합등록을 한 기기로서 주로 가정에서 사용하는 것을 목적으로 하며, 모든 지역에서 사용할 수 있습니다.

Chinese notice

Class A equipment

声明
此为 A 级产品，在生活环境中，该产品可能会造成无线电干扰。在这种情况下，可能需要用户对其干扰采取可行的措施。

Laser compliance

This product may be provided with an optical storage device (that is, CD or DVD drive) and/or fiber optic transceiver. Each of these devices contains a laser that is classified as a Class 1 Laser Product in accordance with US FDA regulations and the IEC 60825-1. The product does not emit hazardous laser radiation.

Each laser product complies with 21 CFR 1040.10 and 1040.11 except for deviations pursuant to Laser Notice No. 50, dated May 27, 2001; and with IEC 60825-1:1993/A2:2001.

⚠ **WARNING:** Use of controls or adjustments or performance of procedures other than those specified herein or in the laser product's installation guide may result in hazardous radiation exposure. To reduce the risk of exposure to hazardous radiation:

- Do not try to open the module enclosure. There are no user-serviceable components inside.
- Do not operate controls, make adjustments, or perform procedures to the laser device other than those specified herein.
- Allow only HP Authorized Service technicians to repair the unit.

The Center for Devices and Radiological Health (CDRH) of the U.S. Food and Drug Administration implemented regulations for laser products on August 2, 1976. These regulations apply to laser products manufactured from August 1, 1976. Compliance is mandatory for products marketed in the United States.

Battery replacement notice

⚠ **WARNING:** The computer contains an internal lithium manganese dioxide, a vanadium pentoxide, or an alkaline battery pack. A risk of fire and burns exists if the battery pack is not properly handled. To reduce the risk of personal injury:

- Do not attempt to recharge the battery.
- Do not expose the battery to temperatures higher than 60°C (140°F).
- Do not disassemble, crush, puncture, short external contacts, or dispose of in fire or water.



Batteries, battery packs, and accumulators should not be disposed of together with the general household waste. To forward them to recycling or proper disposal, use the public collection system or return them to HP, an authorized HP Partner, or their agents.

For more information about battery replacement or proper disposal, contact an authorized reseller or an authorized service provider.

Taiwan battery recycling notice

The Taiwan EPA requires dry battery manufacturing or importing firms in accordance with Article 15 of the Waste Disposal Act to indicate the recovery marks on the batteries used in sales, giveaway or promotion. Contact a qualified Taiwanese recycler for proper battery disposal.



Power cord statement for Japan

製品には、同梱された電源コードをお使い下さい。
同梱された電源コードは、他の製品では使用出来ません。

Acoustics statement for Germany (Geräuschemission)

Schalldruckpegel L_{pA} < 70 dB(A)

Zuschauerpositionen (bystander positions), Normaler Betrieb (normal operation)

Nach ISO 7779:1999 (Typprüfung)

Electrostatic discharge

Preventing electrostatic discharge

To prevent damaging the system, be aware of the precautions you need to follow when setting up the system or handling parts. A discharge of static electricity from a finger or other conductor may damage system boards or other static-sensitive devices. This type of damage may reduce the life expectancy of the device.

To prevent electrostatic damage:

- Avoid hand contact by transporting and storing products in static-safe containers.
- Keep electrostatic-sensitive parts in their containers until they arrive at static-free workstations.
- Place parts on a grounded surface before removing them from their containers.
- Avoid touching pins, leads, or circuitry.
- Always be properly grounded when touching a static-sensitive component or assembly.

Grounding methods to prevent electrostatic discharge

Several methods are used for grounding. Use one or more of the following methods when handling or installing electrostatic-sensitive parts:

- Use a wrist strap connected by a ground cord to a grounded workstation or computer chassis. Wrist straps are flexible straps with a minimum of 1 megohm ±10 percent resistance in the ground cords. To provide proper ground, wear the strap snug against the skin.
- Use heel straps, toe straps, or boot straps at standing workstations. Wear the straps on both feet when standing on conductive floors or dissipating floor mats.
- Use conductive field service tools.
- Use a portable field service kit with a folding static-dissipating work mat.

If you do not have any of the suggested equipment for proper grounding, have an authorized reseller install the part.

For more information on static electricity or assistance with product installation, contact an authorized reseller.

Technical support

Before you contact HP

Be sure to have the following information available before you call HP:

- Technical support registration number (if applicable)
- Product serial number
- Product model name and number
- Product identification number
- Applicable error messages
- Add-on boards or hardware
- Third-party hardware or software
- Operating system type and revision level

HP contact information

For the name of the nearest HP authorized reseller:

- See the Contact HP worldwide (in English) webpage (http://welcome.hp.com/country/us/en/wwcontact.html).

For HP technical support:

- In the United States, for contact options see the Contact HP United States webpage (http://welcome.hp.com/country/us/en/contact_us.html). To contact HP by phone:
  - Call 1-800-HP-INVENT (1-800-474-6836). This service is available 24 hours a day, 7 days a week. For continuous quality improvement, calls may be recorded or monitored.
  - If you have purchased a Care Pack (service upgrade), call 1-800-633-3600. For more information about Care Packs, refer to the HP website (http://www.hp.com/hps).
- In other locations, see the Contact HP worldwide (in English) webpage (http://welcome.hp.com/country/us/en/wwcontact.html).

Customer Self Repair

HP products are designed with many Customer Self Repair (CSR) parts to minimize repair time and allow for greater flexibility in performing defective parts replacement. If during the diagnosis period HP (or HP service providers or service partners) identifies that the repair can be accomplished by the use of a CSR part, HP will ship that part directly to you for replacement. There are two categories of CSR parts:

- **Mandatory**—Parts for which customer self repair is mandatory. If you request HP to replace these parts, you will be charged for the travel and labor costs of this service.

- **Optional**—Parts for which customer self repair is optional. These parts are also designed for customer self repair. If, however, you require that HP replace them for you, there may or may not be additional charges, depending on the type of warranty service designated for your product.

NOTE: Some HP parts are not designed for customer self repair. In order to satisfy the customer warranty, HP requires that an authorized service provider replace the part. These parts are identified as "No" in the Illustrated Parts Catalog.

Based on availability and where geography permits, CSR parts will be shipped for next business day delivery. Same day or four-hour delivery may be offered at an additional charge where geography permits. If assistance is required, you can call the HP Technical Support Center and a technician will help you over the telephone. HP specifies in the materials shipped with a replacement CSR part whether a defective part must be returned to HP. In cases where it is required to return the defective part to HP, you must ship the defective part back to HP within a defined period of time, normally five (5) business days. The defective part must be returned with the associated documentation in the provided shipping material. Failure to return the defective part may result in HP billing you for the replacement. With a customer self repair, HP will pay all shipping and part return costs and determine the courier/carrier to be used.

For more information about HP's Customer Self Repair program, contact your local service provider. For the North American program, refer to the HP website (http://www.hp.com/go/selfrepair).

Réparation par le client (CSR)

Les produits HP comportent de nombreuses pièces CSR (Customer Self Repair = réparation par le client) afin de minimiser les délais de réparation et faciliter le remplacement des pièces défectueuses. Si pendant la période de diagnostic, HP (ou ses partenaires ou mainteneurs agréés) détermine que la réparation peut être effectuée à l'aide d'une pièce CSR, HP vous l'envoie directement. Il existe deux catégories de pièces CSR:

- **Obligatoire** - Pièces pour lesquelles la réparation par le client est obligatoire. Si vous demandez à HP de remplacer ces pièces, les coûts de déplacement et main d'œuvre du service vous seront facturés.
- **Facultatif** - Pièces pour lesquelles la réparation par le client est facultative. Ces pièces sont également conçues pour permettre au client d'effectuer lui-même la réparation. Toutefois, si vous demandez à HP de remplacer ces pièces, l'intervention peut ou non vous être facturée, selon le type de garantie applicable à votre produit.

REMARQUE: Certaines pièces HP ne sont pas conçues pour permettre au client d'effectuer lui-même la réparation. Pour que la garantie puisse s'appliquer, HP exige que le remplacement de la pièce soit effectué par un Mainteneur Agréé. Ces pièces sont identifiées par la mention "Non" dans le Catalogue illustré.

Les pièces CSR sont livrées le jour ouvré suivant, dans la limite des stocks disponibles et selon votre situation géographique. Si votre situation géographique le permet et que vous demandez une livraison le jour même ou dans les 4 heures, celle-ci vous sera facturée. Pour bénéficier d'une assistance téléphonique, appelez le Centre d'assistance technique HP. Dans les documents envoyés avec la pièce de rechange CSR, HP précise s'il est nécessaire de lui retourner la pièce défectueuse. Si c'est le cas, vous devez le faire dans le délai indiqué, généralement cinq (5) jours ouvrés. La pièce et sa documentation doivent être retournées dans l'emballage fourni. Si vous ne retournez pas la pièce défectueuse, HP se réserve le droit de vous facturer les coûts de remplacement. Dans le cas d'une pièce CSR, HP supporte l'ensemble des frais d'expédition et de retour, et détermine la société de courses ou le transporteur à utiliser.

Pour plus d'informations sur le programme CSR de HP, contactez votre Mainteneur Agrée local. Pour plus d'informations sur ce programme en Amérique du Nord, consultez le site Web HP (http://www.hp.com/go/selfrepair).

Riparazione da parte del cliente

Per abbreviare i tempi di riparazione e garantire una maggiore flessibilità nella sostituzione di parti difettose, i prodotti HP sono realizzati con numerosi componenti che possono essere riparati direttamente dal cliente (CSR, Customer Self Repair). Se in fase di diagnostica HP (o un centro di servizi o di assistenza HP) identifica il guasto come riparabile mediante un ricambio CSR, HP lo spedirà direttamente al cliente per la sostituzione. Vi sono due categorie di parti CSR:

- **Obbligatorie** – Parti che devono essere necessariamente riparate dal cliente. Se il cliente ne affida la riparazione ad HP, deve sostenere le spese di spedizione e di manodopera per il servizio.
- **Opzionali** – Parti la cui riparazione da parte del cliente è facoltativa. Si tratta comunque di componenti progettati per questo scopo. Se tuttavia il cliente ne richiede la sostituzione ad HP, potrebbe dover sostenere spese addizionali a seconda del tipo di garanzia previsto per il prodotto.

NOTA: alcuni componenti HP non sono progettati per la riparazione da parte del cliente. Per rispettare la garanzia, HP richiede che queste parti siano sostituite da un centro di assistenza autorizzato. Tali parti sono identificate da un "No" nel Catalogo illustrato dei componenti.

In base alla disponibilità e alla località geografica, le parti CSR vengono spedite con consegna entro il giorno lavorativo seguente. La consegna nel giorno stesso o entro quattro ore è offerta con un supplemento di costo solo in alcune zone. In caso di necessità si può richiedere l'assistenza telefonica di un addetto del centro di supporto tecnico HP. Nel materiale fornito con una parte di ricambio CSR, HP specifica se il cliente deve restituire dei componenti. Qualora sia richiesta la resa ad HP del componente difettoso, lo si deve spedire ad HP entro un determinato periodo di tempo, generalmente cinque (5) giorni lavorativi. Il componente difettoso deve essere restituito con la documentazione associata nell'imballo di spedizione fornito. La mancata restituzione del componente può comportare la fatturazione del ricambio da parte di HP. Nel caso di riparazione da parte del cliente, HP sostiene tutte le spese di spedizione e resa e sceglie il corriere/vettore da utilizzare.

Per ulteriori informazioni sul programma CSR di HP contattare il centro di assistenza di zona. Per il programma in Nord America fare riferimento al sito Web **HP** (http://www.hp.com/go/selfrepair).

Customer Self Repair

HP Produkte enthalten viele CSR-Teile (Customer Self Repair), um Reparaturzeiten zu minimieren und höhere Flexibilität beim Austausch defekter Bauteile zu ermöglichen. Wenn HP (oder ein HP Servicepartner) bei der Diagnose feststellt, dass das Produkt mithilfe eines CSR-Teils repariert werden kann, sendet Ihnen HP dieses Bauteil zum Austausch direkt zu. CSR-Teile werden in zwei Kategorien unterteilt:

- **Zwingend** – Teile, für die das Customer Self Repair-Verfahren zwingend vorgegeben ist. Wenn Sie den Austausch dieser Teile von HP vornehmen lassen, werden Ihnen die Anfahrt- und Arbeitskosten für diesen Service berechnet.
- **Optional** – Teile, für die das Customer Self Repair-Verfahren optional ist. Diese Teile sind auch für Customer Self Repair ausgelegt. Wenn Sie jedoch den Austausch dieser Teile von HP vornehmen lassen möchten, können bei diesem Service je nach den für Ihr Produkt vorgesehenen Garantiebedingungen zusätzliche Kosten anfallen.

HINWEIS: Einige Teile sind nicht für Customer Self Repair ausgelegt. Um den Garantieanspruch des Kunden zu erfüllen, muss das Teil von einem HP Servicepartner ersetzt werden. Im illustrierten Teilekatalog sind diese Teile mit „No“ bzw. „Nein“ gekennzeichnet.

CSR-Teile werden abhängig von der Verfügbarkeit und vom Lieferziel am folgenden Geschäftstag geliefert. Für bestimmte Standorte ist eine Lieferung am selben Tag oder innerhalb von vier Stunden gegen einen Aufpreis verfügbar. Wenn Sie Hilfe benötigen, können Sie das HP technische Support Center anrufen und sich von einem Mitarbeiter per Telefon helfen lassen. Den Materialien, die mit einem CSR-Ersatzteil geliefert werden, können Sie entnehmen, ob das defekte Teil an HP zurückgeschickt werden muss. Wenn es erforderlich ist, das defekte Teil an HP zurückzuschicken, müssen Sie dies innerhalb eines vorgegebenen Zeitraums tun, in der Regel innerhalb von fünf (5) Geschäftstagen. Das defekte Teil muss mit der zugehörigen Dokumentation in der Verpackung zurückgeschickt werden, die im Lieferumfang enthalten ist. Wenn Sie das defekte Teil nicht zurückschicken, kann HP Ihnen das Ersatzteil in Rechnung stellen. Im Falle von Customer Self Repair kommt HP für alle Kosten für die Lieferung und Rücksendung auf und bestimmt den Kurier-/Frachtdienst.

Weitere Informationen über das HP Customer Self Repair Programm erhalten Sie von Ihrem Servicepartner vor Ort. Informationen über das CSR-Programm in Nordamerika finden Sie auf der HP Website unter (http://www.hp.com/go/selfrepair).

Reparaciones del propio cliente

Los productos de HP incluyen muchos componentes que el propio usuario puede reemplazar (*Customer Self Repair*, CSR) para minimizar el tiempo de reparación y ofrecer una mayor flexibilidad a la hora de realizar sustituciones de componentes defectuosos. Si, durante la fase de diagnóstico, HP (o los proveedores o socios de servicio de HP) identifica que una reparación puede llevarse a cabo mediante el uso de un componente CSR, HP le enviará dicho componente directamente para que realice su sustitución. Los componentes CSR se clasifican en dos categorías:

- **Obligatorio:** componentes para los que la reparación por parte del usuario es obligatoria. Si solicita a HP que realice la sustitución de estos componentes, tendrá que hacerse cargo de los gastos de desplazamiento y de mano de obra de dicho servicio.
- **Opcional:** componentes para los que la reparación por parte del usuario es opcional. Estos componentes también están diseñados para que puedan ser reparados por el usuario. Sin embargo, si precisa que HP realice su sustitución, puede o no conllevar costes adicionales, dependiendo del tipo de servicio de garantía correspondiente al producto.

NOTA: Algunos componentes no están diseñados para que puedan ser reparados por el usuario. Para que el usuario haga valer su garantía, HP pone como condición que un proveedor de servicios autorizado realice la sustitución de estos componentes. Dichos componentes se identifican con la palabra "No" en el catálogo ilustrado de componentes.

Según la disponibilidad y la situación geográfica, los componentes CSR se enviarán para que lleguen a su destino al siguiente día laborable. Si la situación geográfica lo permite, se puede solicitar la entrega en el mismo día o en cuatro horas con un coste adicional. Si precisa asistencia técnica, puede llamar al Centro de asistencia técnica de HP y recibirá ayuda telefónica por parte de un técnico. Con el envío de materiales para la sustitución de componentes CSR, HP especificará si los componentes defectuosos deberán devolverse a HP. En aquellos casos en los que sea necesario devolver algún componente a HP, deberá hacerlo en el periodo de tiempo especificado, normalmente cinco días laborables. Los componentes defectuosos deberán devolverse con toda la documentación relacionada y con el embalaje de envío. Si no enviara el componente defectuoso requerido, HP podrá cobrarle por el de sustitución. En

el caso de todas sustituciones que lleve a cabo el cliente, HP se hará cargo de todos los gastos de envío y devolución de componentes y escogerá la empresa de transporte que se utilice para dicho servicio.

Para obtener más información acerca del programa de Reparaciones del propio cliente de HP, póngase en contacto con su proveedor de servicios local. Si está interesado en el programa para Norteamérica, visite la página web de HP siguiente (http://www.hp.com/go/selfrepair).

Customer Self Repair

Veel onderdelen in HP producten zijn door de klant zelf te repareren, waardoor de reparatieduur tot een minimum beperkt kan blijven en de flexibiliteit in het vervangen van defecte onderdelen groter is. Deze onderdelen worden CSR-onderdelen (Customer Self Repair) genoemd. Als HP (of een HP Service Partner) bij de diagnose vaststelt dat de reparatie kan worden uitgevoerd met een CSR-onderdeel, verzendt HP dat onderdeel rechtstreeks naar u, zodat u het defecte onderdeel daarmee kunt vervangen. Er zijn twee categorieën CSR-onderdelen:

- **Verplicht:** Onderdelen waarvoor reparatie door de klant verplicht is. Als u HP verzoekt deze onderdelen voor u te vervangen, worden u voor deze service reiskosten en arbeidsloon in rekening gebracht.
- **Optioneel:** Onderdelen waarvoor reparatie door de klant optioneel is. Ook deze onderdelen zijn ontworpen voor reparatie door de klant. Als u echter HP verzoekt deze onderdelen voor u te vervangen, kunnen daarvoor extra kosten in rekening worden gebracht, afhankelijk van het type garantieservice voor het product.

OPMERKING: Sommige HP onderdelen zijn niet ontwikkeld voor reparatie door de klant. In verband met de garantievoorwaarden moet het onderdeel door een geautoriseerde Service Partner worden vervangen. Deze onderdelen worden in de geïllustreerde onderdelencatalogus aangemerkt met "Nee".

Afhankelijk van de leverbaarheid en de locatie worden CSR-onderdelen verzonden voor levering op de eerstvolgende werkdag. Levering op dezelfde dag of binnen vier uur kan tegen meerkosten worden aangeboden, indien dit mogelijk is gezien de locatie. Indien assistentie gewenst is, belt u een HP Service Partner om via de telefoon technische ondersteuning te ontvangen. HP vermeldt in de documentatie bij het vervangende CSR-onderdeel of het defecte onderdeel aan HP moet worden geretourneerd. Als het defecte onderdeel aan HP moet worden teruggezonden, moet u het defecte onderdeel binnen een bepaalde periode, gewoonlijk vijf (5) werkdagen, retourneren aan HP. Het defecte onderdeel moet met de bijbehorende documentatie worden geretourneerd in het meegeleverde verpakkingsmateriaal. Als u het defecte onderdeel niet terugzendt, kan HP u voor het vervangende onderdeel kosten in rekening brengen. Bij reparatie door de klant betaalt HP alle verzendkosten voor het vervangende en geretourneerde onderdeel en kiest HP zelf welke koerier/transportonderneming hiervoor wordt gebruikt.

Neem contact op met een Service Partner voor meer informatie over het Customer Self Repair programma van HP. Informatie over Service Partners vindt u op de **HP website** (http://www.hp.com/go/selfrepair).

Reparo feito pelo cliente

Os produtos da HP são projetados com muitas peças para reparo feito pelo cliente (CSR) de modo a minimizar o tempo de reparo e permitir maior flexibilidade na substituição de peças com defeito. Se, durante o período de diagnóstico, a HP (ou fornecedores/parceiros de serviço da HP) concluir que o reparo pode ser efetuado pelo uso de uma peça CSR, a peça de reposição será enviada diretamente ao cliente. Existem duas categorias de peças CSR:

- **Obrigatória** – Peças cujo reparo feito pelo cliente é obrigatório. Se desejar que a HP substitua essas peças, serão cobradas as despesas de transporte e mão-de-obra do serviço.
- **Opcional** – Peças cujo reparo feito pelo cliente é opcional. Essas peças também são projetadas para o reparo feito pelo cliente. No entanto, se desejar que a HP as substitua, pode haver ou não a cobrança de taxa adicional, dependendo do tipo de serviço de garantia destinado ao produto.

OBSERVAÇÃO: Algumas peças da HP não são projetadas para o reparo feito pelo cliente. A fim de cumprir a garantia do cliente, a HP exige que um técnico autorizado substitua a peça. Essas peças estão identificadas com a marca "No" (Não), no catálogo de peças ilustrado.

Conforme a disponibilidade e o local geográfico, as peças CSR serão enviadas no primeiro dia útil após o pedido. Onde as condições geográficas permitirem, a entrega no mesmo dia ou em quatro horas pode ser feita mediante uma taxa adicional. Se precisar de auxílio, entre em contato com o Centro de suporte técnico da HP para que um técnico o ajude por telefone. A HP especifica nos materiais fornecidos com a peça CSR de reposição se a peça com defeito deve ser devolvida à HP. Nos casos em que isso for necessário, é preciso enviar a peça com defeito à HP dentro do período determinado, normalmente cinco (5) dias úteis. A peça com defeito deve ser enviada com a documentação correspondente no material de transporte fornecido. Caso não o faça, a HP poderá cobrar a reposição. Para as peças de reparo feito pelo cliente, a HP paga todas as despesas de transporte e de devolução da peça e determina a transportadora/serviço postal a ser utilizado.

Para obter mais informações sobre o programa de reparo feito pelo cliente da HP, entre em contato com o fornecedor de serviços local. Para o programa norte-americano, visite o site da HP (http://www.hp.com/go/selfrepair).

顧客自己修理保証サービス

修理時間を短縮し、故障部品の交換における高い柔軟性を確保するために、HP製品には多数の顧客自己修理（CSR）部品があります。診断の際に、CSR部品を使用すれば修理ができるとHP（HPまたはHP正規保守代理店）が判断した場合、HPはその部品を直接、お客様に発送し、お客様に交換していただきます。CSR部品には以下の2通りがあります。

- 必須 - 顧客自己修理が必須の部品。当該部品について、もしもお客様がHPに交換作業を依頼される場合には、その修理サービスに関する交通費および人件費がお客様に請求されます。
- 任意 - 顧客自己修理が任意である部品。この部品も顧客自己修理用です。当該部品について、もしもお客様がHPに交換作業を依頼される場合には、お買い上げの製品に適用される保証サービス内容の範囲内においては、別途費用を負担していただくことなく保証サービスを受けることができます。

注： HP製品の一部の部品は、顧客自己修理用ではありません。製品の保証を継続するためには、HPまたはHP正規保守代理店による交換作業が必須となります。部品カタログには、当該部品が顧客自己修理除外品である旨が記載されています。

部品供給が可能な場合、地域によっては、CSR部品を翌営業日に届くように発送します。また、地域によっては、追加費用を負担いただくことにより同日または4時間以内に届くように発送することも可能な場合があります。サポートが必要なときは、HPの修理受付窓口に電話していただければ、技術者が電話でアドバイスします。交換用のCSR部品または同梱物には、故障部品をHPに返送する必要があるかどうかが表示されています。故障部品をHPに返送する必要がある場合は、指定期限内（通常は5営業日以内）に故障部品をHPに返送してください。故障部品を返送する場合は、届いた時の梱包箱に関連書類とともに入れてください。故障部品を返送しない場合、HPから部品費用が請求されます。顧客自己修理の際には、HPは送料および部品返送費を全額負担し、使用する宅配便会社や運送会社を指定します。

客户自行维修

HP 产品提供许多客户自行维修 (CSR) 部件，以尽可能缩短维修时间和在更换缺陷部件方面提供更大的灵活性。如果在诊断期间 HP（或 HP 服务提供商或服务合作伙伴）确定可以通过使用 CSR 部件完成维修，HP 将直接把该部件发送给您进行更换。有两类 CSR 部件：

- **强制性的** — 要求客户必须自行维修的部件。如果您请求 HP 更换这些部件，则必须为该服务支付差旅费和人工费用。
- **可选的** — 客户可以选择是否自行维修的部件。这些部件也是为客户自行维修设计的。不过，如果您要求 HP 为您更换这些部件，则根据为您的产品指定的保修服务类型，HP 可能收取或不再收取任何附加费用。

注：某些 HP 部件的设计并未考虑客户自行维修。为了满足客户保修的需要，HP 要求授权服务提供商更换相关部件。这些部件在部件图解目录中标记为“否”。

CSR 部件将在下一个工作日发运（取决于备货情况和允许的地理范围）。在允许的地理范围内，可在当天或四小时内发运，但要收取额外费用。如果需要帮助，您可以致电 HP 技术支持中心，将会有技术人员通过电话为您提供帮助。HP 会在随更换的 CSR 部件发运的材料中指明是否必须将有缺陷的部件返还给 HP。如果要求您将有缺陷的部件返还给 HP，那么您必须在规定期限内（通常是五 (5) 个工作日）将缺陷部件发给 HP。有缺陷的部件必须随所提供的发运材料中的相关文件一起返还。如果未能送还有缺陷的部件，HP 可能会要求您支付更换费用。客户自行维修时，HP 将承担所有相关运输和部件返回费用，并指定快递商/承运商。

有关 HP 客户自行维修计划的详细信息，请与您当地的服务提供商联系。有关北美地区的计划，请访问 HP 网站 (http://www.hp.com/go/selfrepair)。

客戶自行維修

HP 產品設計了許多「客戶自行維修」(CSR) 的零件以減少維修時間，並且使得更換瑕疵零件時能有更大的彈性。如果在診斷期間 HP（或 HP 服務供應商或維修夥伴）辨認出此項維修工作可以藉由使用 CSR 零件來完成，則 HP 將直接寄送該零件給您作更換。CSR 零件分為兩種類別：

- **強制的** — 客戶自行維修所使用的零件是強制性的。如果您要求 HP 更換這些零件，HP 將會向您收取此服務所需的外出費用與勞動成本。
- **選購的** — 客戶自行維修所使用的零件是選購的。這些零件也設計用於客戶自行維修之用。不過，如果您要求 HP 為您更換，則可能需要也可能不需要負擔額外的費用，端視針對此產品指定的保固服務類型而定。

備註：某些 HP 零件沒有消費者可自行維修的設計。為符合客戶保固，HP 需要授權的服務供應商更換零件。這些零件在圖示的零件目錄中，被標示為「否」。

基於材料取得及環境允許的情況下，CSR 零件將於下一個工作日以快遞寄送。在環境的允許下當天或四小時內送達，則可能需要額外的費用。若您需要協助，可致電「HP 技術支援中心」，會有一位技術人員透過電話來協助您。不論損壞的零件是否必須退回，HP 皆會在與 CSR 替換零件一起運送的材料中註明。若要將損壞的零件退回 HP，您必須在指定的一段時間內（通常為五 (5) 個工作天），將損壞的零件寄回 HP。損壞的零件必須與寄送資料中隨附的相關技術文件一併退還。如果無法退還損壞的零件，HP 可能要向您收取替換費用。針對客戶自行維修情形，HP 將負責所有運費及零件退還費用並指定使用何家快遞/貨運公司。

如需 HP 的「客戶自行維修」方案詳細資訊，請連絡您當地的服務供應商。至於北美方案，請參閱 HP 網站 (http://www.hp.com/go/selfrepair)。

고객 셀프 수리

HP 제품은 수리 시간을 최소화하고 결함이 있는 부품 교체 시 더욱 융통성을 발휘할 수 있도록 하기 위해 고객 셀프 수리(CSR) 부품을 다량 사용하여 설계되었습니다. 진단 기간 동안 HP(또는 HP 서비스 공급업체 또는 서비스 협력업체)에서 CSR 부품을 사용하여 수리가 가능하다고 판단되면 HP는 해당 부품을 바로 사용자에게 보내어 사용자가 교체할 수 있도록 합니다. CSR 부품에는 두 가지 종류가 있습니다.

- **고객 셀프 수리가 의무 사항인 필수 부품.** 사용자가 HP에 이 부품의 교체를 요청할 경우 이 서비스에 대한 출장비 및 작업비가 청구됩니다.
- **고객 셀프 수리가 선택 사항인 부품.** 이 부품들도 고객 셀프 수리가 가능하도록 설계되었습니다. 하지만 사용자가 HP에 이 부품의 교체를 요청할 경우 사용자가 구입한 제품에 해당하는 보증 서비스 유형에 따라 추가 비용 없이 교체가 가능할 수 있습니다.

참고: 일부 HP 부품은 고객 셀프 수리가 불가능하도록 설계되었습니다. HP는 만족스러운 고객 보증을 위해 공인 서비스 제공업체를 통해 부품을 교체하도록 하고 있습니다. 이러한 부품들은 Illustrated Parts Catalog에 "No"라고 표시되어 있습니다.

CSR 부품은 재고 상태와 지리적 조건이 허용하는 경우 다음 영업일 납품이 가능하도록 배송이 이루어집니다. 지리적 조건이 허용하는 경우 추가 비용이 청구되는 조건으로 당일 또는 4시간 배송이 가능할 수도 있습니다. 도움이 필요하시면 HP 기술 지원 센터로 전화하십시오. 전문 기술자가 전화로 도움을 줄 것입니다. HP는 결함이 발생한 부품을 HP로 반환해야 하는지 여부를 CSR 교체 부품과 함께 배송된 자료에 지정합니다. 결함이 발생한 부품을 HP로 반환해야 하는 경우에는 지정된 기간 내(통상 영업일 기준 5일)에 HP로 반환해야 합니다. 이 때 결함이 발생한 부품은 제공된 포장 재료에 넣어 관련 설명서와 함께 반환해야 합니다. 결함이 발생한 부품을 반환하지 않는 경우 HP가 교체 부품에 대해 비용을 청구할 수 있습니다. 고객 셀프 수리의 경우, HP는 모든 운송 및 부품 반환 비용을 부담하며 이용할 운송업체 및 택배 서비스를 결정합니다.

HP 고객 셀프 수리 프로그램에 대한 자세한 내용은 가까운 서비스 제공업체에 문의하십시오. 북미 지역의 프로그램에 대해서는 HP 웹 사이트(http://www.hp.com/go/selfrepair)를 참조하십시오.

Acronyms and abbreviations

ACPI

Advanced Configuration and Power Interface

ACU

Array Configuration Utility

ASR

Automatic Server Recovery

BIOS

Basic Input/Output System

BMC

baseboard management controller

CCITT

International Telegraph and Telephone Consultative Committee

CS

cable select

DDR

double data rate

DIMM

dual inline memory module

DU

driver update

EFS

Extended Feature Supplement

ESD

electrostatic discharge

FBDIMM

fully buffered DIMM

I/O

input/output

IDE

integrated device electronics

IEC

International Electrotechnical Commission

IML

Integrated Management Log

IRQ

interrupt request

ISP

Internet service provider

KVM

keyboard, video, and mouse

LED

light-emitting diode

NEC

National Electrical Code

NEMA

National Electrical Manufacturers Association

NFPA

National Fire Protection Association

NIC

network interface controller

NLM

NetWare Loadable Module

NVRAM

non-volatile memory

ORCA

Option ROM Configuration for Arrays

OS

operating system

PCI

peripheral component interface

PCI Express

Peripheral Component Interconnect Express

PCI-X

peripheral component interconnect extended

PDU

power distribution unit

POST

Power-On Self Test

PPM

processor power module

PSP

ProLiant Support Pack

RBSU

ROM-Based Setup Utility

ROM

read-only memory

SAS

serial attached SCSI

SATA

serial ATA

SCSI

small computer system interface

SDRAM

synchronous dynamic RAM

SFF

small form-factor

SIM

Systems Insight Manager

SSD

support software diskette

TCP/IP

Transmission Control Protocol/Internet Protocol

TMRA

recommended ambient operating temperature

TPM

trusted platform module

UID

unit identification

UPS

uninterruptible power system

USB

universal serial bus

VGA

video graphics array

Index

A

access panel 5
ACPI support 54
airflow requirements 7, 8
application software problems 55
AT commands 44, 45
audio 43
audio problems 43
authorized reseller 67

B

backup, errors 37
backup, restoring 54
batteries, insufficient warning when low 32
batteries, replacing 64
battery 32, 64
battery replacement notice 64
BIOS upgrade 16
BSMI notice 63

C

cables 17, 61
cables, VGA 43
Canadian notice 62
cartridge, tape 36
cautions 19
color 43
configuration procedures 10
connection errors 44, 45, 46
connection problems 17, 45
contacting HP 48, 49, 67
CSR (customer self repair) 67
customer self repair (CSR) 67

D

DAT drive error 36
DAT drive failure 36
DAT drives 36
data loss 35
data recovery 35
Declaration of Conformity 61
diagnosing problems 17, 20
Diagnostic Adapter 44
diagnostic steps 20
diagnostic tools 16
dial tone 44
drive failure, detecting 35, 37
drive not found 37

E

electrical grounding requirements 9
electrostatic discharge 66
energy saver features 43
environmental requirements 7
error log 54
error messages 54
European Union notice 62
external device problems 42

F

factory-installed operating systems 54
Federal Communications Commission (FCC) notice 60, 61
firmware, version 36, 57
flash ROM 56

G

grounding methods 66
grounding requirements 9

H

hard drive backplane 13
hard drives 13
hardware options 12
hardware options installation 10, 12
hardware problems 33
hardware troubleshooting 32
help resources 67
hotfixes 53
HP Insight Diagnostics 16
HP technical support 67
HP website 67

I

IBM OS/2 51
identification number 60
Important Safety Information document 18
information required 48, 49
installation, server options 10, 12

J

Japanese notice 63

K

keyboard 43
keyboard problems 43
Korean notices 63
KVM 43

L

laser compliance 64
laser devices 64
LEDs 32
LEDs, troubleshooting 17, 20
Lights-Out 100i Remote Management 16
Linux 49, 55
loose connections 17

M

memory count error 39, 40
memory not recognized 40
memory problems 39
Microsoft operating systems 49
modems 44, 45
monitor 43
mouse 43
mouse problems 43

N

network controllers 46
NIC (network interface card) 54
no dial tone 44
Novell NetWare 50, 54

O

operating system crash 53
operating system updates 53
operating systems 10, 49, 53, 54, 55
optimum environment 7
Optional Installation Services 7
options installation 10, 12

P

panic error 54
patches 53
PCI boards 34
PCI Devices option 12
phone numbers 67
power cord 19, 65
power distribution unit (PDU) 9
power problems 31
power requirements 9
power source 31
power supplies 13, 31
powering down 5
powering up 5
PPM (processor power module) 41
PPM failure LEDs 41
PPM problems 41
PPM slots 41
printer problems 43
problem diagnosis 17, 20
processors 12, 40
Protocols Interview 54

R

rack installation 9, 10
rack stability 19
rack warnings 9, 19
read/write errors 36, 37
registering the server 11
regulatory compliance identification numbers 60
regulatory compliance notices 60, 62, 65
remote management overview 16
requirements, airflow 7
requirements, power 9
requirements, space 7
requirements, temperature 8
restoring 54
ROM, types 56
ROMPaq utility 16

S

safety considerations 9, 18
SATA hard drive 39
SCO 51
sense error codes 35
series number 60
server features and options 12

service notifications 17
Service Packs 53, 54
short circuits 41
site requirements 8
software errors 55, 56
software failure 55
software problems 53
software troubleshooting 55, 56
space requirements 7
static electricity 66
Sun Solaris 52, 54
support 67
symbols on equipment 18
symptom information 20
system board battery 64

T

Taiwan battery recycling notice 65
technical support 67
telephone numbers 67
temperature requirements 8
third-party devices 34
troubleshooting 17
troubleshooting sequence 20
Trusted Platform Module (TPM) 14

U

unknown problem 32
updating drivers 16
updating the operating system 53
updating the system ROM 56
UPS (uninterruptible power supply) 9, 32
utilities 16

V

ventilation 7
VGA 43
video colors 43
video problems 43

W

warnings 9, 19
website, HP 67