RETIRED: This document has been officially retired, and the base products listed herein are now considered obsolete and are no longer available for sale. Consequently, the information contained within may no longer be current. This document is provided exclusively for reference and informational purposes.

ProLiant DL F100 Integrated Cluster Solutions and Non-Integrated Cluster Bundle Configurations

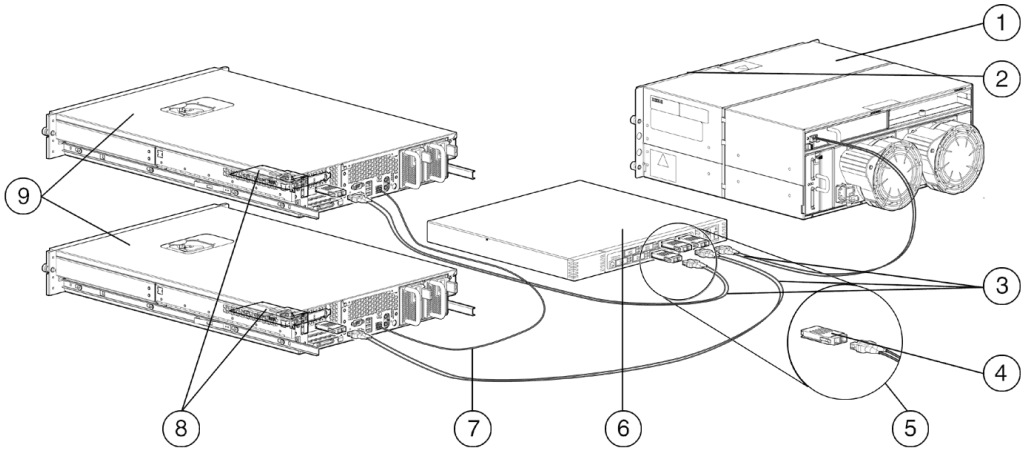

1. MSA1000
2. Smart Array Controller
3. Multi-Mode Fibre Channel Cables
4. Gigabit Interface Convertors (GBICs)
5. Small Form Factor Fixed Transceivers (SFF) or Small Form Factor Pluggable Transceivers (SFP)
6. Fibre Channel Interconnect #1 and #2
7. Ethernet "HeartBeat" Loop
8. Host Bus Adapters
9. ProLiant Servers #1 and #2

ProLiant DL F200 Integrated Cluster Solutions and Non-Integrated Cluster Bundle Configurations

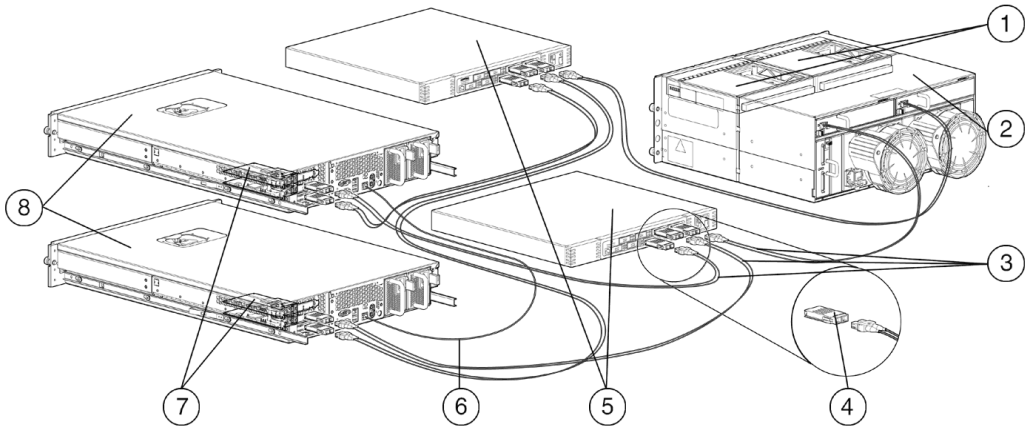

1. Smart Array Controller
2. MSA1000
3. Multi-Mode Fibre Channel Cables
4. Gigabit Interface Convertors (GBICs), SFP or SFF
5. Fibre Channel Interconnect #1 and #2
6. Ethernet "HeartBeat" Loop
7. Host Bus Adapters
8. ProLiant Servers #1 and #2

ProLiant DL580 G2 F100/F200 Integrated Cluster Solutions and Non-Integrated Cluster Bundles

The ProLiant DL580 G2 F100 and F200 Integrated cluster solutions & Non-Integrated Cluster bundles for MSA1000 are a family of integrated cluster solutions designed to simplify the deployment of fibre channel cluster solutions. The solutions are integrated in a 22 U rack in our world class factories. The bundles are delivered as separate parts on a shrink wrapped pallets to be integrated at the customer site by the customer or an HP field service engineer. Each product can be ordered with one part number.

- Ideal for mail, Internet servers, file/print, IT Consolidation, and databases
- Uses standard Microsoft® clustering software, provided as part of the operating system (optional), to provide clustering functionality and failover (OS Not included with solution)
- Internal hardware components for server and storage already installed and cabled (Integrated Cluster Solutions only)
- Single path from servers to storage for cost effective availability (F100 Integrated Cluster Solutions and Non-Integrated Cluster Bundles only)
- Industry-leading HP installation and management functionality for lights-out management (optional) of your Integrated Cluster Solution and Non-Integrated Cluster Bundle
- Scalable architecture that can grow with your future needs
- Ability to upgrade an F100 Integrated Cluster Solutions or Non-Integrated Cluster to redundant paths (See ProLiant Cluster F200 for MSA1000 Upgrade Bundle) or purchase a redundant path F200 Integrated Solution or Non-Integrated Bundle.
- All HP ProLiant Integrated Cluster Solutions or Non-Integrated Cluster Bundles come with ProLiant Cluster kits that offer detailed instructions on set-up and installation of clusters.
  NOTE: The F200 solutions, bundles and upgrade bundles include two Secure Path V4.0 for Windows® Workgroup licenses.
- HP offers services and support that can be tailored to meet customer's installation and set-up needs. Through our Configure to order process our customers can work with their account manager and solutions architects to have their cluster completely built with IP addresses set and customized images loaded in our factories.
- We have added these Integrated Cluster Solutions completely cabled in a 22U Rack and Non-integrated Bundles to our offerings to make the clustering experience less complex. Please see the solutions page on our Web site for more details: http://www.hp.com/servers/proliant/highavailability.
- These products can then be shipped throughout North America and EMEA.

MSA Hub 2/3 (Integrated)

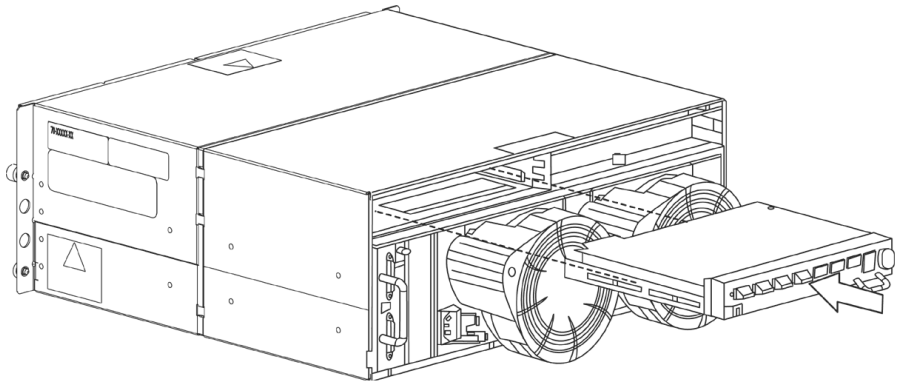

Overview

MSA1000 Controller

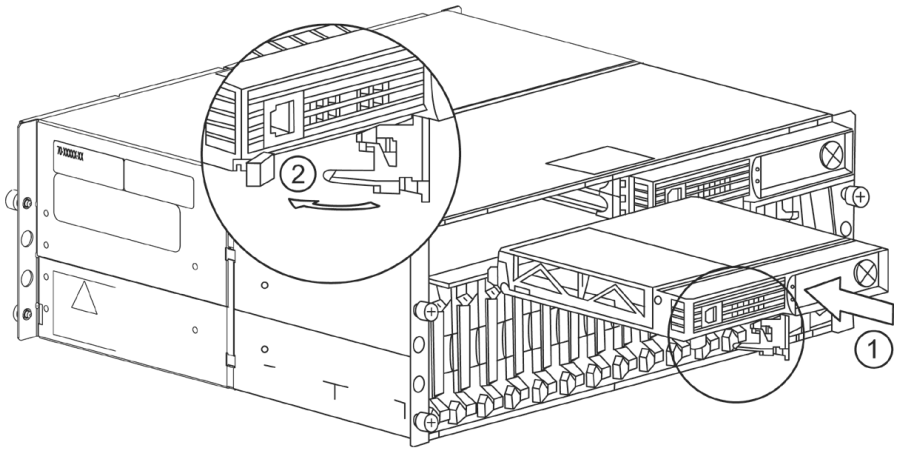

HP StorageWorks Modular SAN Array 1000

- High performance controller(s) built on DAS to SAN {DtS} architecture for maximum investment protection
- 4U rack mount design combining both the controller and disk shelf
- 2Gb/s Fibre Channel host connections
- Optional embedded 6-port 2Gb/s Fibre Channel fabric switch or 3-port 2Gb/s Fibre Channel hub
- Ultra3 SCSI connections to drives
- Support for HP Ultra2, Ultra3, and Ultra320 Universal 1" Drives
- Scaleable from 3 to 42 drives via StorageWorks 4200/4300 Enclosures
- Support for 1Gb/s and 2Gb/s Fibre Channel fabrics
- Multiple clusters and/or single server access by all supported OSes to an individual MSA1000

Overview

DL580 G2 Server

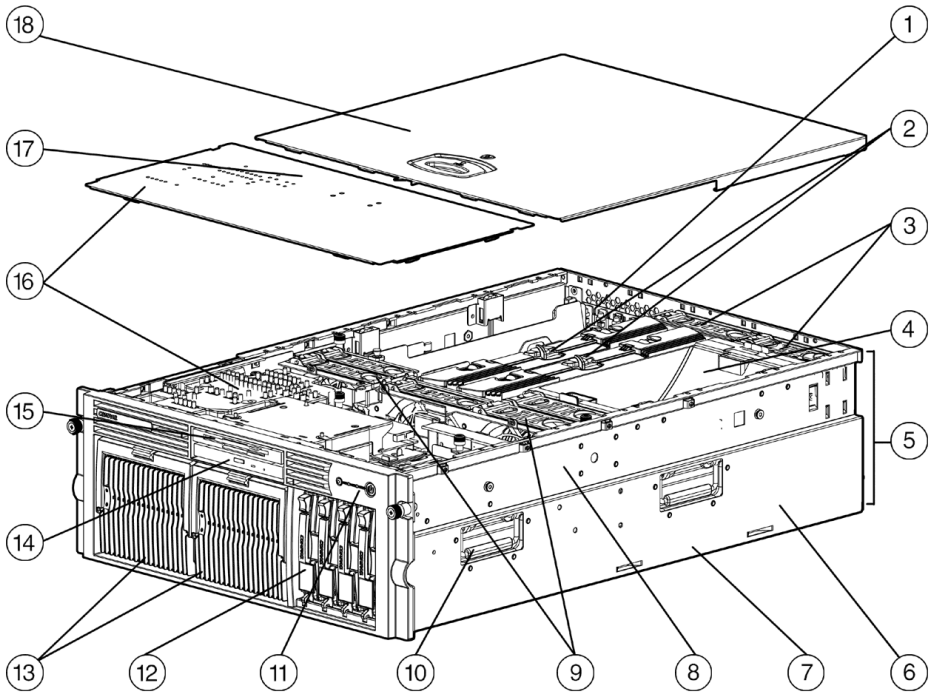

1. Six 64-bit/100-MHz PCI-X I/O Slots (Four Hot Plug, two Non-Hot Plug)
2. Dual Memory Expansion Boards (8 DIMM slots each - one board standard on all DL580 G2 models, 2nd board is optional)
3. Hot Plug Redundant Fans
4. Processor Air Baffle
5. 4U (7" Height) Rack Form Factor
6. Up to 4 Intel Processors MP
7. Intergrated Smart Array 5i Plus Controller (Battery Backed Write Cache standard on all 2P DL580 G2 models, optional on 1P model)
8. Tool-less "Snap In" rail solution
9. Additional Hot Plug Redundant Fans
10. Server Lifting Handle
11. Front Panel LED Display (internal and external health, Unit ID light) and Power Button
12. Wide Ultra3 Duplex Drive Cage (can be Simplex configured)
13. Dual 800-Watt Hot Plug Redundant Power Supplies (low line or high line), standard on all 2P DL580 G2 models (one ships standard on 1P model, requires optional RPS for redundancy)
14. Ejectable Slim Line Drives: Ejectable 24X (slim line) CD-ROM IDE Drive
15. Ejectable Slim Line Drives: Ejectable 1.44 MB (slim line) Diskette Drive
16. QuickFind Diagnostic Display (viewable through Front Access Panel)
17. Removable Front Access Panel
18. Removable Rear Access Panel

Overview

ProLiant DL580 G2 Server

- Next generation DL580 G2 delivers maximum performance and unprecedented availability in a flexible, rack optimized form factor
- Intel® Xeon MP 1.50 GHz/1MB Processors
- ServerWorks Grand Champion-HE chipset
- 4x1 interleaved memory, 200MHz DDR SDRAM Memory (PC1600 Registered SDRAM with Advanced ECC functionality)
- 2048 MB (2P Models) or 1024 MB (1P Model) standard memory, expandable to 32 GB
- Compaq Advanced Memory Protection (Online Spare, Single Board Mirrored Memory, Hot Plug Mirrored Memory)
- Six, full length 64-bit/100 MHz PCI-X slots, 4 Hot Pluggable
- Integrated Lights-Out Management (iLO) on system board
- Integrated Compaq NC7770 PCI-X Gigabit Server Adapter in a slot
- Integrated Smart Array 5i Plus Controller (Dual Channel, Ultra3) with 64-MB total memory on 5i Plus Memory Module
- Battery Backed Write Cache Enabler module on all 2P models (optional on 1P model)
- Wide Ultra3 Backplane, supports up to four 1^2 HDDs, Duplex or Simplex configurable
- Internal Hot Plug Drive Storage of up to 587.2 GB (4 x 146.8-GB 1" Ultra320 hard drives)
- Redundant Cooling Zones for major subsystems (Memory, I/O, CPUs) assure 7x24 cooling
- 800W Hot Plug Redundant Power Supplies (1 std on 1P model)
- Toolless and virtually cable-less internal design
- Innovative diagnostic lighting (QuickFind Diagnostic Display) for rapid response to service events
- Rapid Deployment racking solution (rack rails and cable management)
- Protected by Compaq Services, including a limited three-year parts, labor and on-site warranty with optional four-hour response. Pre-Failure Warranty and Compaq Service and Support Programs available on a Worldwide basis - Certain restrictions and exclusions apply. Consult the Compaq Customer Support Center at 1-800-345-1518 for details.

Models (DL580 G2 Cluster Solutions and Bundles)

		EMEA	NA
ProLiant Cluster Kits	ProLiant DL580 G2 F100 Integrated Cluster Solution (Microsoft Windows NT® 4.0EE, Windows 2000 Advanced Server, or Windows Server 2003)	321656-421	317646-001
	ProLiant DL580 G2 F200 Integrated Cluster Solution (Microsoft Windows NT 4.0EE, Windows 2000 Advanced Server, or Windows Server 2003)	317646-421	321739-001
	ProLiant DL580 G2 F200 Non- Integrated Cluster Bundle (Microsoft Windows NT 4.0EE, Windows 2000 Advanced Server, or Windows Server 2003)	N/A	321496-001
	ProLiant Cluster F200 for MSA1000 Upgrade Bundle	N/A	317647-001

ProLiant DL580 G2 F100/F200 Integrated Cluster Solutions and Non-Integrated Cluster Bundles

The ProLiant Cluster Integrated Solutions and Non-Integrated Bundles provide high availability for applications and data in a business-critical environment. The ProLiant DL580 G2 F100 and F200 Integrated Solutions & Non-Integrated Bundles utilizes HP's industry-leading ProLiant server products, StorageWorks Modular SAN Array 1000, Ethernet interconnect and HP's leading installation and systems management utilities. The ProLiant DL580 G2 F100 Integrated Cluster Solutions & Non-Integrated Bundles for MSA1000 utilizes the industry-standard Microsoft Cluster Server software for cluster operation and management. The F100 solutions and bundles provides a single path connection between the ProLiant Servers and the MSA1000, with a fibre channel 3 port embedded mini-hub (StorageWorks MSA hub 2/3) creating an affordable entry-level fibre channel high availability configuration. The cluster kit, which HP offers with the ProLiant DL580 G2 F100 Integrated Cluster Solutions & Non-Integrated Bundles for MSA1000, contains documentation and a 10' Ethernet interconnect cable f or heartbeat connection between server nodes. The ProLiant DL580 G2 F200 Integrated Cluster solution for MSA1000 delivers a higher level of availability then the F100. TheF200 also uses HP's industry-leading ProLiant servers, StorageWorks Modular SAN Array 1000, Ethernet server to server interconnect, and HP's industry of availability in clusters by enabling multi-path fibre channel connections. SANworks Secure Path management software by HP, included with the kit, features support for a redundant fibre channel infrastructure (two paths through the fibre channel three 3) port embedded mini-hub) utilizing dual Host-Bus-Adapters in each server connected to one MSA1000 storage subsystems, each with dual RAID controllers that creates a configuration with no single point of failure. HP also provides a cluster kit for the F200 solutions and bundles, which contains the software components that are required to connect two HP servers and HP Fibre Channel Storage systems together in a cluster, along with documentation and an interconnect cable.

HP StorageWorks Modular SAN Array 1000

The HP StorageWorks modular SAN array 1000 is the first generation 2Gb Fibre Channel storage system designed for the entry level to mid-range Storage Area Network (SAN). Designed to reduce the complexity, expense and risk of SAN deployment, the MSA1000 is a scaleable, high performance storage system built with investment protection in mind. The modular design of the MSA1000 allows the user to easily add storage capacity on an as needed basis.
The MSA1000 combines the array controller shelf and the drive shelf, which holds up to fourteen 1^2 universal disk drives in a single 4U rack mount cabinet. More storage can be easily deployed with the addition of up to two StorageWorks 4314 or 4214 Enclosures for a maximum storage capacity of 6TB when using the new 146GB drives. The MSA1000 provides the latest 2Gb Fibre Channel technology to the hosts. Besides the single port 2Gb Fibre Channel I/O module that comes standard, there is an optional 6-port, 2Gb Fibre Channel fabric switch that fits inside the MSA1000. A recent optional addition is a 3-port 2Gb Fibre Channel hub that also fits inside - an ideal low cost solution for simple 2-node clustering.
The MSA1000 provides Ultra3 SCSI connections to the hard drives and uses the HP Universal 1^2 Ultra2, Ultra3, and/or Ultra320 drives. By utilizing existing SCSI drives, the MSA1000 lowers the total cost of ownership and extends the customer's hardware investments into the future. Using management tools such as HP Insight Manager 7, Array Configuration Utility and the StorageWorks Fabric Switch Management Utility can remotely manage the MSA1000.
Recent updates to the MSA1000's controller firmware offer support for NetWare and Linux operating systems along with the original support for Microsoft Windows NT, Windows 2000, and Windows Server 2003. This updated firmware also supports multiple clusters and/or single servers accessing an MSA1000.

Service and Support Offerings (HP Care Pack Services)

HP Care Pack Services listed here are available in North America only.

Windows 2000 Advanced Server Cluster Installation and Startup Service for ProLiant Servers:
HP.com web page: http://h18005.www1.hp.com/services/carepaq/us/install/cp_win2000.html.

2 node Cluster *(ProLiant Server Only)*

Windows 2000 Adv. Server Cluster Installation & Startup Service for Proliant Servers CSD (One 2- node Cluster)	248497-002	FM-W2KA2-IN
Windows 2000 Adv. Server Cluster Installation & Startup Service for Proliant Servers CSD (Two 2- node cluster pairs)	248498-002	FM-W2KA4-IN

HP StorageWorks modular SAN array 1000 installation & startup service:
http://services-im.inet.cpqcorp.net/ServiceMenu/packages/ww/CSD-MSA1000.DOC.

External Fibre Storage

MSA1000 I&S – Core Service	263858-002	QR-SMMSA-IS
MSA1000 I&S – Redundancy Option (SecurePath)	305465-002	QR-SMMSR-IS
MSA1000 I&S – Subsys add-on (Add an extra MSA1000)	305464-002	QR-SMMSS-IS

Solution/Bundle Contents

ProLiant DL580 G2 F100 Integrated Cluster Solution Contents			
(Part Number: 317646-001 (US), 321656-421 (EMEA))			
		Number of Units	Part Number
Servers	DL580R02 X1500-1MB, 1024MB (1P)	2	202174-xx1
	Intel Xeon MP X1.50 GHz-1MB Processor Option Kit	2 (1 Ea server)	191220-B21
	800W Hot Plug Redundant Power Supply US	2 (1 Ea server)	278535-001
	36.4-GB 15,000 rpm U320 Universal Hard Drive (1")	4 (2 Ea server)	286776-B22
	MSA 1000 Fibre Channel Adapter (FCA) 2101	2 (1 Ea server)	245299-B21
	ProLiant Essentials integrated Lights-Out (iLO) Advanced Pack	2 (1 Ea server)	263825-B21
	Compaq NC7770 PCI-X Gigabit Server Adapter	2 (1 Ea server)	244948-B21
	ProLiant Cluster HA/F100 for MSA1000	1	252408-B23
External Storage	HP StorageWorks modular SAN array 1000	1	201723-B22
	5 m LC-LC Multi-Mode Fibre Channel Cable	2	221692-B22
	HP StorageWorks MSA Hub 2/3	1	286763-B21
Rack and Supported Rack Options	Modular Power Distribution Units (mPDU), Low Volt Model, 24A (100-127 VAC) (NA, Japan) (NA Models) NOTE: Part Number 252663-D71 ships with the US ProLiant DL580 G2 F100 Integrated Cluster Solution PN 317646-001).	2	252663-D71
	Modular Power Distribution Units (mPDU), High Volt Model, 16A (200-240 VAC) (WW) (EMEA Models) NOTE: Part Number 252663-B24 ships with the EMEA ProLiant DL580 G2 F100 Integrated Cluster Solution PN 321656-421).	2	252663-B24
	Server Console Switch 1 x 4-port (100 to 230 VAC)	1	400336-xx1
	CPU to Server Console Cable, 7'	2	110936-B25
	TFT5600 RKM Rack Keyboard Monitor	1	221546-xx1
	Rack Blanking Panels - Graphite (Multi)	1	253214-B26
	Cable Spool	2	70-40853-03
	HP Rack 10622 (22U) - Shock Pallet	1	245163-B22

ProLiant Cluster F200 for MSA1000 Upgrade Bundle Contents			
(Part Number: 317647-001 (NA))			
(For ProLiant DL580 G2, DL380 G3, & DL360 G3 F100 Integrated Cluster Solution Only)			
		Number of Units	Part Number
F200 Optional Upgrade	ProLiant Cluster HA/F200 for MSA1000	1	252409-B23
	MSA 1000 Fibre Channel Adapter (FCA) 2101	2	245299-B21
	HP StorageWorks MSA Hub 2/3	1	286763-B21
	2m LC-LC Multi-Mode Fibre Channel Cable	2	221692-B22
	2Gb/s SFP Fibre Channel Transceiver Kit (used on switches with SFP ports)	1	221470-B21
	msa1000 Controller, with 256MB cache	1	218231-B21

Solution/Bundle Contents

ProLiant DL580 G2 F200 Integrated Cluster Solution			
(Part Number: 321739-001(US), 317646-421(EMEA))			
ProLiant DL580 G2 F200 Non-Integrated Cluster Bundle			
(Part Number: 321496-001(NA))			
		Number of Units	Part Number
Servers	DL580R02 X1500-1MB, 1024MB (1P)	2	202174-xx1
	Intel Xeon MP X1.50 GHz-1MB Processor Option Kit	2 (1 Ea server)	191220-B21
	800W Hot Plug Redundant Power Supply, US	2 (1 Ea server)	278535-001
	36.4-GB 15,000 rpm U320 Universal Hard Drive (1")	4 (2 Ea server)	286776-B22
	MSA 1000 Fibre Channel Adapter (FCA) 2101	4 (2 Ea server)	245299-B21
	ProLiant Essentials integrated Lights-Out (iLO) Advanced Pack	2 (1 Ea server)	263825-B21
	Compaq NC7770 PCI-X Gigabit Server Adapter	2 (1 Ea server)	244948-B21
	ProLiant Cluster HA/F100 for MSA1000	1	252409-B23
External Storage	HP StorageWorks modular SAN array 1000	1	201723-B22
	5 m LC-LC Multi-Mode Fibre Channel Cable	4	221692-B22
	MSA1000 Controller, with 256MB cache	1	218231-B22
	2Gb/s SFP Fibre Channel Transceiver Kit (used on switches with SFP ports)	1	221470-B21
	HP StorageWorks MSA Hub 2/3	2	286763-B21
Rack and Supported Rack Options	NOTE: NO Racks or Supported Rack Options are included with the ProLiant DL580 G2 F200 Non-Integrated Cluster Bundles (Part Number: 321496-001 (NA)).		
	Modular Power Distribution Units (mPDU), Low Volt Model, 24A (100-127 VAC) (NA, Japan) (NA Models) NOTE: Part Number 252663-D71 ships with the US ProLiant DL580 G2 F200 Integrated Cluster Solution PN 321739-001).	2	252663-D71
	Modular Power Distribution Units (mPDU), High Volt Model, 32A (200-240 VAC) (Int'l) (EMEA Models) NOTE: Part Number 252663-B31 ships with the EMEA ProLiant DL580 G2 F200 Integrated Cluster Solution PN 317646-421).	2	252663-B31
	Server Console Switch 1 x 4-port (100 to 230 VAC)	1	400336-xx1
	CPU to Server Console Cable, 7'	2	110936-B25
	TFT5600 RKM Rack Keyboard Monitor	1	221546-xx1
	Rack Blanking Panels - Graphite (Multi)	1	253214-B26
	Cable Spool	2	70-40853-03

Country Code for DL580 G2 Server (202174-xx1)	Country Code for TFT5600 RKM (221546-xx1)	Country Code for Server Console Switch (400336-xx1)
-001 = US	-001 = US	-001 = US
-421 = EURO	-031 = UK	-B31 = Int'l

© Copyright 2003 Hewlett-Packard Development Company, L.P.
The information contained herein is subject to change without notice.

Microsoft and Windows NT are US registered trademarks of Microsoft Corporation. Intel is a US registered trademark of Intel Corporation.

The only warranties for HP products and services are set forth in the express warranty statements accompanying such products and services. Nothing herein should be construed as constituting an additional warranty. HP shall not be liable for technical or editorial errors or omissions contained herein.